Instruction
Manual

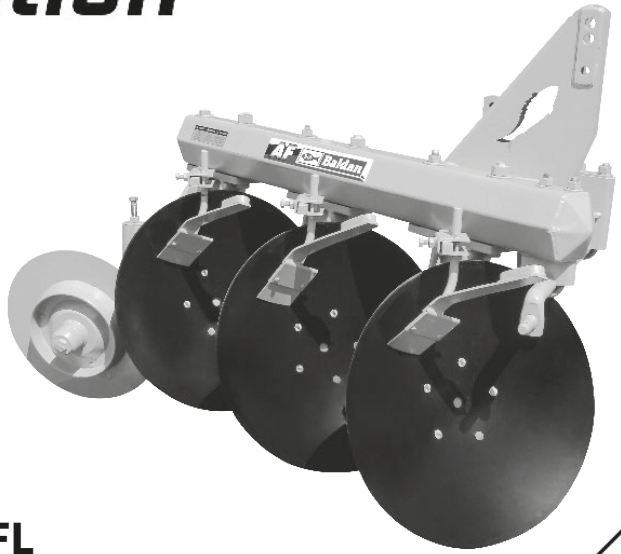

AF
Mounted Disc Plough

AFL
Mounted Disc Plough - Light

BALDAN

INTRODUCTION

Thank you for your preference and congratulations on the excellent choice you have just made: you have purchased a product manufactured with the **BALDAN IMPLEMENTOS AGRÍCOLAS S/A** technology.
This manual will guide you in the necessary procedures from the time of purchase to the operating utilization, safety and maintenance procedures.

BALDAN guarantees that delivered to the dealer a complete and in perfect conditions implement.

The dealer is responsible for the safekeeping and conservation during the period it remains in its possession as well as for mounting, retightening, lubrication and general revision.
During technical delivery, the dealer should instruct the customer on maintenance, safety, obligations in eventual technical assistance, strict observation of the warranty certificate and reading of the instruction manual.

Any request for technical assistance in warranty must be made to the dealer from whom it was purchased.
We emphasize once more the need to carefully read the warranty certificate and observe all the items of this manual, so you will be increasing the service life of the implement.

Instruction
Manual

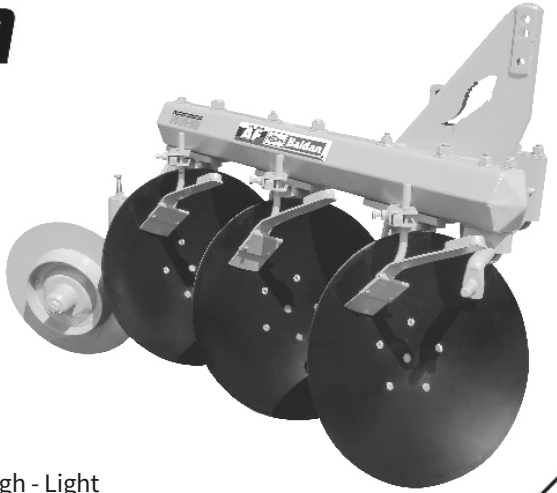

AF
Mounted Disc Plough

AFL
Mounted Disc Plough - Light

BALDAN IMPLEMENTOS AGRÍCOLAS S/A.
CNPJ: 52.311.347/0009-06
Insc. Est.: 441.016.953.110

Scan the QR Code on the identification plate of your device and access this Instruction Manual online.

BALDAN

TABLE OF CONTENTS

WARRANTY 6
Product Warranty 6
GENERAL INFORMATION 8
Owner 8
SAFETY STANDARDS ..... **9 - 11**
WARNINGS ..... **12 - 13**
COMPONENTS ..... **14 - 15**
TECHNICAL SPECIFICATIONS **16**
MOUNTING **17**
Mounting of Pipe Support - AF / AFL (Figure 03) *18*
Mounting of Discs - AF / AFL (Figure 04) *19*
Mounting of Cleaners - AF / AFL (Figure 05) *20*
Mounting of Guide Wheel - AF / AFL (Figure 06) *21*
Mounting of Depth Wheel (Optional) - AF (Figure 07) *22*
COUPLING **23**
Coupling of the Plow - AF / AFL (Figure 08) *23*
SETTING **24**
Centralization - AF / AFL (Figure 09) *24*

Leveling of the Plow- AF / AFL (Figure 10) 25
ADJUSTMENTS **26**
Adjustments of 3rd Point - AF / AFL (Figures 11) 26
Horizontal Adjustment of Discs - AF / AFL (Figures 12 / Table 03) 27
Vertical Adjustment of Discs - AF / AFL (Figures 13 / Table 04) 28
Adjustment of the Direction - AF / AFL (Figure 14) 29
Adjustment of Guide Wheel Angle - AF / AFL (Figure 15) 30
Adjustment of Cleaners - AF / AFL (Figure 16) 31
Adjustment of Crank - AF (Figure 17) 32
Adjustment of Spring Pressure - AF / AFL (Figure 18 / Table 05) 33
CALCULATIONS **34**
Approximate Hourly Production - AF / AFL 34
Approximate Hourly Production Table - AF / AFL (Table 06) 35
OPERATIONS **36**
Operating Recommendations - AF / AFL 36
Plowing System 37
Plowing in Fields from Outside to Inside - AF / AFL (Figure 19) 37
Plowing in Fields from Inside to Outside - AF / AFL (Figure 20) 37
Strip Plowing - AF / AFL (Figure 21) 38
Contour Plowing - AF / AFL (Figure 22) 39

MAINTENANCE **40**
Lubrication - AF / AFL (Table 07) *40*
Table of Greases and Equivalents *40*
Lubricate Every 10 Hours of Work AF / AFL (Figure 23) *41*
Lubricate Every 50 Hours of Work AF / AFL (Figure 24) *41*
Lubricate Every 50 Hours of Work (Continuation) - AF / AFL (Figures 24) *42*
Precautions - AF / AFL *43*
General Cleaning - AF / AFL *43*
OPTIONAL **44**
Depth Wheel - AFL (Figure 25) *44*
IDENTIFICATION **45**
Product Identification - AF / AFL (Figure 26) ..... *45 - 46*
NOTES **47**
CERTIFICATE **47**
Warranty Certificate ..... *48 - 54*

WARRANTY

PRODUCT WARRANTY

BALDAN IMPLEMENTOS AGRÍCOLAS S/A guarantees to dealer the normal functioning of the implement for a period of six (6) months as from the date of delivery on the sales invoice to the first consumer.

During this period **BALDAN** is committed to repairing material and/or manufacturing defects under its responsibility, which means that manpower, freights, and other expenses are under dealer responsibility.

During the warranty period, the request and replacement of eventual defective parts should be executed by the regional dealer, who will send the defective part to **BALDAN** for analysis.

When this procedure is not possible and the problem solving capacity of the dealer is exhausted, the dealer must request the support from **BALDAN** Technical Assistance through the specific form distributed to dealers.

After **BALDAN** Technical Assistance analyzes the replaced items and concludes that it is not a warranty issue, the dealer becomes responsible for the costs related to the replacement as well as the expenses with material, trip including accommodation and meals, accessories, lubricant used and other expenses resulting from calling Technical Assistance, and **BALDAN** is authorized to make the respective billing in the name of the dealer.

Any repair made by the dealer on the product during the warranty period will only be authorized by **BALDAN** through prior presentation of the budget describing the parts and manpower to be executed.

The product subjected to repairs or modifications at official dealers not belonging to the network of **BALDAN** dealers as well as the application of non-genuine parts or components to the user product are not included in this deed.

The present warranty becomes void when it is confirmed that the defect or damage is the result of undue use of the product, non-observation of the instructions or the inexperience of the operator.

It is agreed that the present warranty does not cover tires, polyethylene hoppers, cardans, hydraulic components, etc, which are equipment under warranty by their manufacturers.

The manufacturing and/or material defects subject to this warranty deed will not include, under any circumstance, reason for termination of purchase and sales contract or for identification of any kind.

BALDAN reserves the right to change and/or improve the technical characteristics of its products without prior warning and without obligation of doing so with the previously manufactured products.

GENERAL INFORMATION

OWNER

BALDAN IMPLEMENTOS AGRÍCOLAS S/A is not responsible for any accidental damage caused by the undue use, transport or storage of your implement, either due to the negligence and/or inexperience of any person.

Only persons with the full knowledge of the tractor and the implement should execute the transport and operation.

BALDAN is not responsible for any damage caused in unforeseeable or abnormal situations during the normal use of the implement.

Incorrect use of this equipment may result in serious or fatal accidents. Before putting the equipment into operation, carefully read the manual's instructions. Ensure that the person responsible for the operation is instructed on the correct and safe handling. Also ensure that the operator read and understood the product instruction manual.

NR-31 - OCCUPATIONAL SAFETY AND HEALTH IN AGRICULTURE, LIVESTOCK, FORESTRY, FOREST EXPLORATION AND AQUACULTURE.

The objective of this Regulatory Standard is to establish the precepts to be observed in the organization and in the work environment, compatible with planning and development of the agricultural, livestock, forestry, forest exploration and aquaculture activities in connection to occupational safety, health and environment.

TO THE OWNER OR OPERATOR OF THE EQUIPMENT:
Carefully read and observe the provision in NR-31.

For further information, consult the site and read the full NR-31.
http://portal.mte.gov.br/legislacao/normas-regulamentadoras-1.htm

SAFETY STANDARDS

THIS SYMBOL INDICATES IMPORTANT SAFETY WARNING. EVERY TIME YOU SEE THIS IN THIS MANUAL, CAREFULLY READ THE MESSAGE THAT FOLLOWS AND PAY ATTENTION TO THE POSSIBILITY OF PERSONAL ACCIDENTS.

WARNING

• Carefully read the instructions manual to know the recommended safety practices.

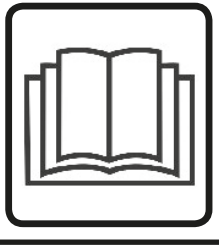

WARNING

• Only start tractor operating when you are duly accommodated and with the safety belt attached.

WARNING

• Do not transport people on the tractor and neither inside nor over the equipment.

SAFETY STANDARDS

THIS SYMBOL INDICATES IMPORTANT SAFETY WARNING. EVERY TIME YOU SEE THIS IN THIS MANUAL, CAREFULLY READ THE MESSAGE THAT FOLLOWS AND PAY ATTENTION TO THE POSSIBILITY OF PERSONAL ACCIDENTS.

WARNING

• Do not work with the tractor if the front is not heavy enough for the back equipment. Add weights or ballasts to the front or front wheels in case it may be raised.

WARNING

• Before executing any maintenance on your equipment, check if it is at a standstill.
• Avoid being hit.

WARNING

• There are risks of severe injuries due to falling when working on sloped lands.
• Do not over speed.

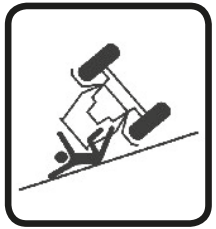

SAFETY STANDARDS

THIS SYMBOL INDICATES IMPORTANT SAFETY WARNING. EVERY TIME YOU SEE THIS IN THIS MANUAL, CAREFULLY READ THE MESSAGE THAT FOLLOWS AND PAY ATTENTION TO THE POSSIBILITY OF PERSONAL ACCIDENTS.

WARNING

• Always stay away from active elements of the equipment (Discs) as they are sharp and can cause accidents.
• Wear safety gloves on your hands when per-for-ming services on the discs.

WARNING

• Do not make adjustments while the plow is in motion.
• Turn off the tractor when executing any ser-vice on the plow.

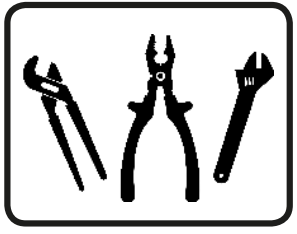

WARNING

• Do not exceed the speed of 16 km/h or 10 MPH when transporting this equipment in order to avoid the risk of damages and accidents.

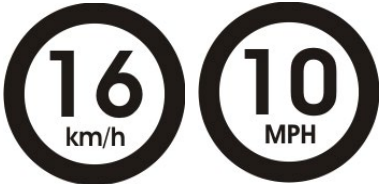

WARNINGS

01- ⚠ When working with the implement, prevent people from staying too close to or over the implement.

02- ⚠ Do not wear very loose clothing as it can get caught on the implement.

03- ⚠ Do not drive on highways, especially at night. Use safety lights throughout the route.

04- ⚠ When activating the tractor engine, be properly seated on the operator seat and have complete knowledge of the correct and safe handling of the tractor as well as the implement. Always keep the gear stick in the neutral position, switch off the power take-off control gearing and place the hydraulic controls in the neutral position.

05- ⚠ Do not start the tractor engine in a closed place without suitable ventilation because the exhaust gases are dangerous to health.

06- ⚠ When maneuvering the tractor in order to coupler the implement, make sure there is enough space and no one too close to it, always maneuver at reduced speed and be prepared to brake in an emergency.

07- ⚠ Do not make adjustments with the implement in operation

08- ⚠ When working on sloped lands, proceed carefully, always maintaining the necessary stability. In the case of misbalance, reduce the speed, turn the wheels towards the slope side of the land and never raise the implement.

09- ⚠ When driving the tractors on streets, keep the brake pedals interconnected.

WARNINGS

10- ⚠ **Always drive the tractor at speeds compatible with safety, especially in works on uneven lands or slopes; always keep the tractor coupled.**

11- ⚠ **Do not work with the tractor if the front is light. Add weights to the front or front wheels in case it may be raised.**

12- ⚠ **When leaving the tractor, put the brake handle in the neutral position and use the parking brake. Do not leave the implement coupled to the tractor with the hydraulic system in the raised position.**

13- ⚠ **Alcoholic drinks or some drugs may cause loss of reflexes and change the physical conditions of the operator. Therefore, never operate this equipment when under the influence of these substances.**

14- ⚠ **Read or explain all the procedure above to the user that cannot read.**

In the case of doubts consult the After Sales.
Phone: 0800-152577 / E-mail: posvenda@baldan.com.br

MOUNTED DISC PLOUGH
AF

01- Frame
02- Hydraulic coupling shaft
03- Disc
04- Disc hub
05- Front support of pipe
06- Rear support of pipe
07- Parking support
08- Cleaners
09- Guide wheel support
10- Guide wheel

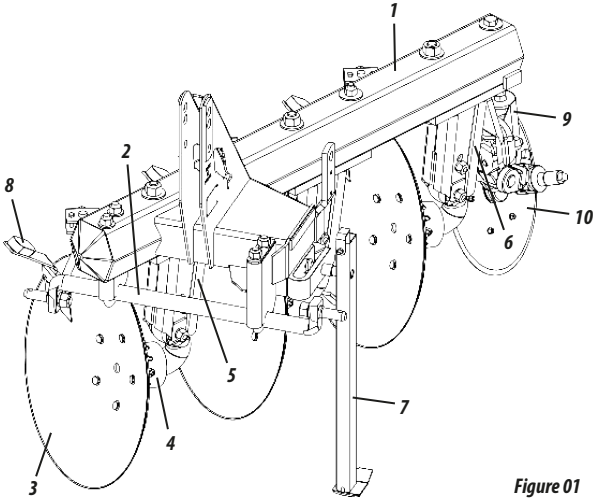

Figure 01

MOUNTED DISC PLOUGH - LIGHT
AFL

01- Frame
02- Hydraulic coupling shaft
03- Disc
04- Disc hub
05- Front support of pipe
06- Rear support of pipe
07- Depth wheel with crank (Optional)
08- Cleaners
09- Guide wheel support
10- Guide wheel

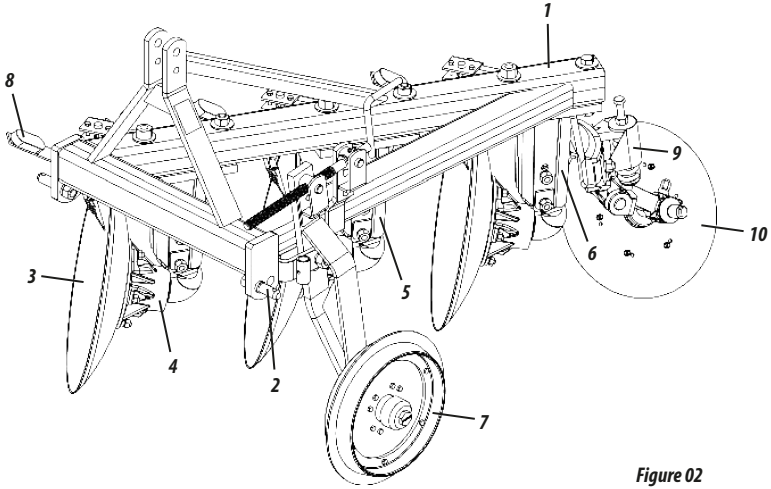

Figure 02

TECHNICAL SPECIFICATIONS

AF

Table 01

Model	Number of Discs	Disc Diameter	Working Width (mm)	Approximate Weight (Kg)			Tractor Power (Cv)
				Disc 26″	Disc 28″	Disc 30″	
AF	2	26″, 28″ ou 30″	600	308	319	325	40 - 50
AF	3	26″, 28″ ou 30″	900	387	404	412	50 - 60
AF	4	26″, 28″ ou 30″	1200	515	537	549	75 - 90
AF	5	26″, 28″ ou 30″	1500	569	650	664	100 - 120

AFL

Table 02

Model	Number of Discs	Disc Diameter	Working Width (mm)	Approximate Weight (Kg)		Tractor Power (Cv)
				Disc 26″	Disc 28″	
AFL	3	26″ ou 28″	900	393	402	60 - 70
AFL	4	26″ ou 28″	1200	472	484	80 - 90
AFL	5	26″ ou 28″	1500	547	566	100 - 120

Working Depth ..... *150-300 mm*
Disc Spacing ..... *550 mm*

Baldan reserves the right to change and/or improve the technical characteristics of its products without prior warning and without obligation of doing so with the previously manufactured products. The technical specifications are approximate and informed in the normal working conditions.

MOUNTING

For logistic purposes, the **AF / AFL** plows leave the factory as follows:

- Domestic Market: The plows leave semi-mounted, remaining only mounting of the discs.

- Foreign Market: The plows leave completely dismounted.

1 - ⚠ ***Before mounting the AF / AFL, seek an ideal location where mounting is facilitated.***

2 - ⚠ ***Wear gloves on your hands when performing mounting and dismounting services on the discs.***

3 - ⚠ ***Do not wear loose clothing because it can get caught on the equipment.***

To mount the **AF / AFL** plows, proceed according to the instructions on the next page:

MOUNTING

MOUNTING OF PIPE SUPPORT - AF / AFL (FIGURE 3)

Start mounting the AF with the pipe support (1), proceeding as follows:

01 - Couple the support of the pipe (1) on the frame (2), securing with the use of bolts (3), ¸at washers (4) and nuts (5).

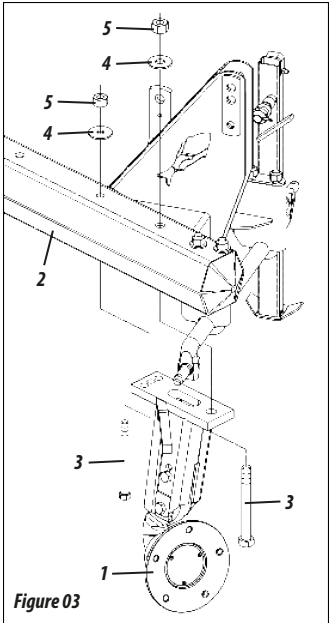

Figure 03

IMPORTANT | *Repeat this procedure when mounting the other supports of the pipe (1).*

MOUNTING

MOUNTING OF DISCS - AF / AFL (FIGURE 4)

After mounting the pipe support, attach the discs (1) proceeding as follows:

01 - Couple the disc (1) to the pipe support (2), securing with the use of bolts (3), pressure washers (4) and nuts (5).

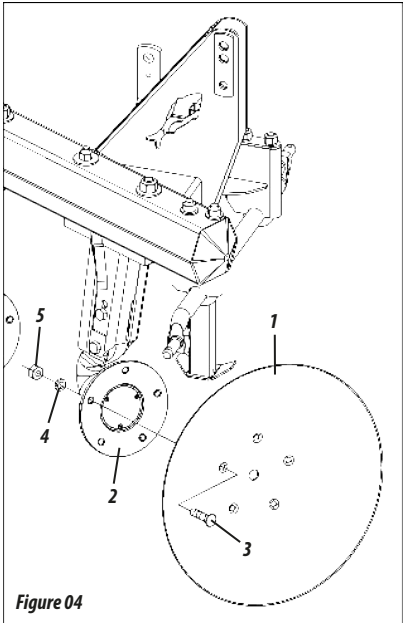

Figure 04

IMPORTANT | ***Repeat this procedure when mounting the other discs (1).***

MOUNTING

MOUNTING OF CLEANERS - AF / AFL (FIGURE 5)

After mounting the discs, attach the cleaners (1), proceeding as follows:

01 - Couple the cleaner (1) to the support of the pipe (2) securing with the bolt (3).

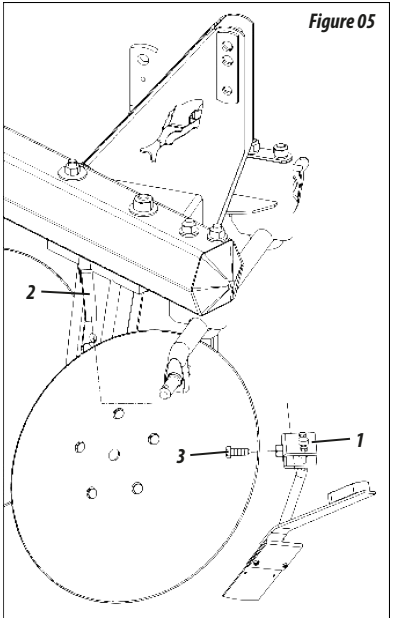

Figure 05

IMPORTANT | *Repeat this procedure when mounting the other cleaners (1).*

MOUNTING

MOUNTING OF GUIDE WHEEL - AF / AFL (FIGURE 6)

Then attach the guide wheel proceeding as follows:

01 - Couple the disc (1) to the guide wheel (2), securing with the use of bolts (3), pressure washers (4) and nuts (5).

02 - Then couple the guide wheel (2) to the support (6) securing with the bolt (7), of the grip (8), pressure washer (9) and nut (10).

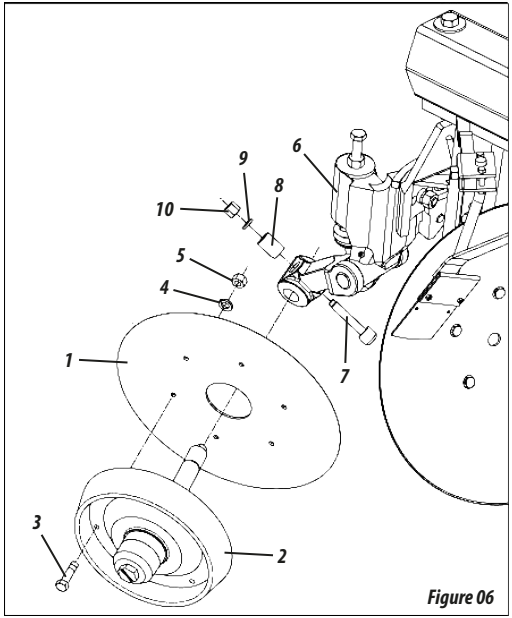

Figure 06

IMPORTANT *Repeat this procedure to mount the guide wheel on the left side frames.*

MOUNTING

MOUNTING OF DEPTH WHEEL (OPTIONAL) - AFL (FIGURE 7)

To attach the depth wheel (1), proceed as follows:

01 - Couple the depth wheel (1) to the frame (2) and secure it with the screw (3), pressure washer (4) and nut (5).

02 - Then attach the clip of the crank (6) and secure with the bolts (7), pressure washers (8) and nuts (9).

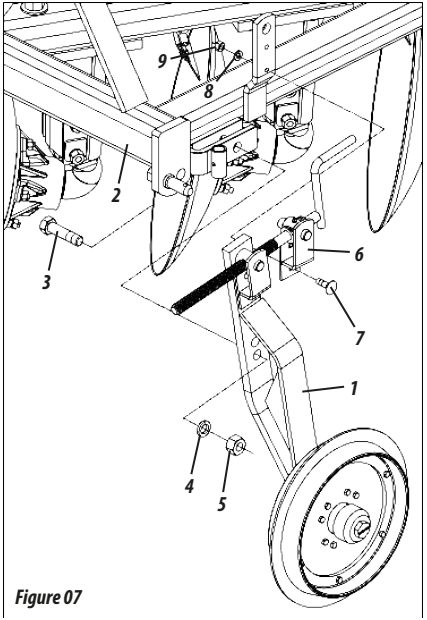

Figure 07

IMPORTANT | ***The depth wheel (1) can only be purchased optionally for the AFL model plow.***

COUPLING OF THE PLOW - AF / AFL (FIGURE 8)

Before coupling the **AF / AFL**, check if the tractor is prepared for work by observing the following items:

- Check if the tractor is equipped with a set of weights and ballasts at the front or on the front wheels to avoid the tractor from being raised. For the rear wheels, it will give the tractor more stability and traction on the soil.

- Adjust the eyelet of the lower arms of the tractor.

To couple the **AF / AFL**, proceed as follows:

01 - Slowly bring the tractor close to the plow on reverse, paying attention to the application of the brakes. Use the position control lever of the hydraulic when drawing close to the plow, leaving the left lower arm at the level of the coupling of the plow.

02 - Couple the left lower arm of the tractor through the coupling pin (1) to support **"A"** of the plow.

03 - Couple the 3rd point of the tractor to support **"B"** of the plow.

04 - Finally, with the aid of the regulating lever **"C"**, couple the right lower arm of the tractor to support **"D"** of the plow.

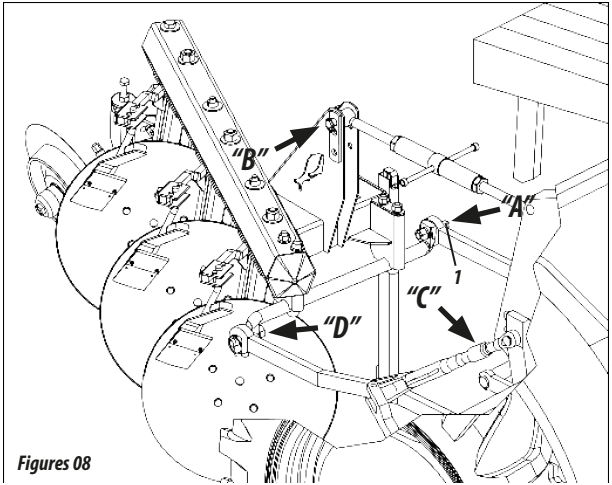

Figures 08

CENTRALIZATION - AF / AFL (FIGURE 9)

To centralize the **AF / AFL** in relation to the longitudinal axis of the tractor, proceed as follows:

01 - Align the upper coupler of the plow with the 3rd point of the tractor, checking to see if the distances **"E"** of the lower arms of the hydraulic system are the same in relation to the tractor tires. The lower arms should be leveled with one another.

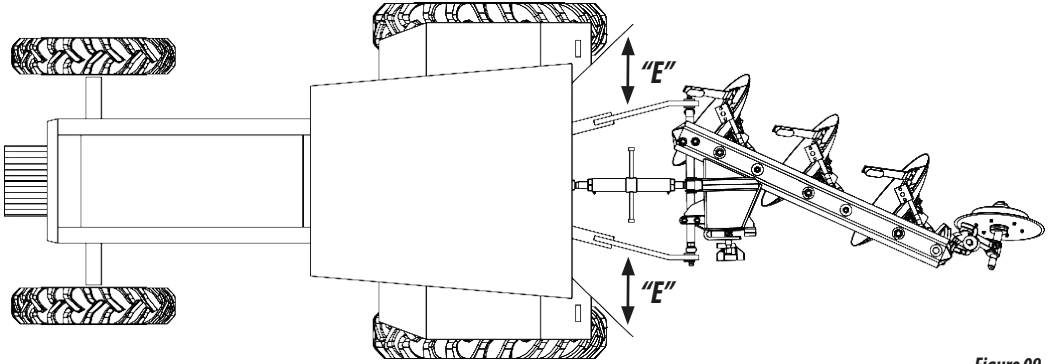

Figure 09

LEVELING OF THE PLOW - AF / AFL (FIGURE 10)

To level the **AF / AFL**, proceed as follows:

01 - First, the tractor should be on a flat plane.

02 - Then, level the plow in the cross-sectional direction (width) through the crank of the right lower arm of the hydraulic coupler.

03 - Afterwards, execute longitudinal leveling (length).

04 - This is executed through the 3rd point arm. Observe that the rear discs of the plow should be approximately 2 cm above ground level, as shown in **figure 10**.

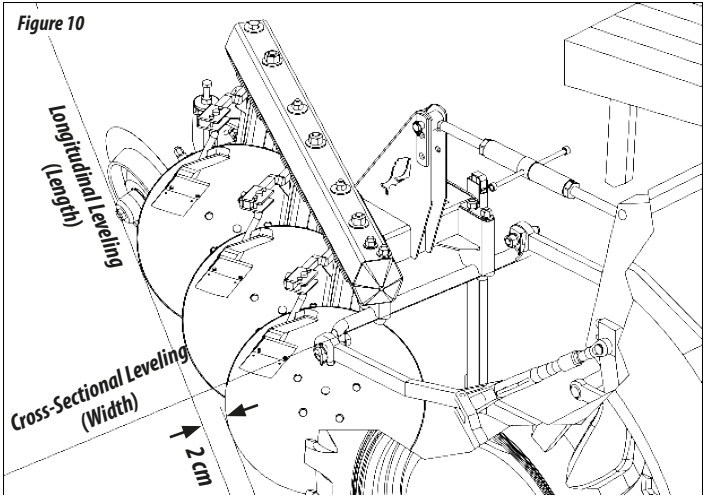

Figure 10

IMPORTANT

Ensure that the rear disc of the plow is approximately 2 cm above ground level in order for the discs to have the same penetration depth in the soil.

ADJUSTMENTS OF 3RD POINT - AF / AFL (FIGURES 11)

The **AF / AFL** has adjustments on the coupling of the 3rd point that are used for different types of soil.

AF

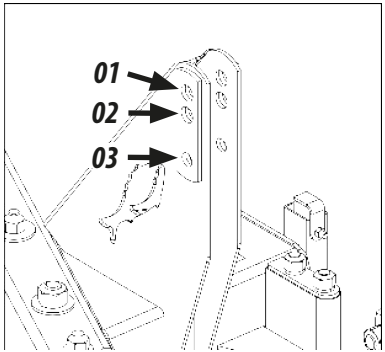

AFL

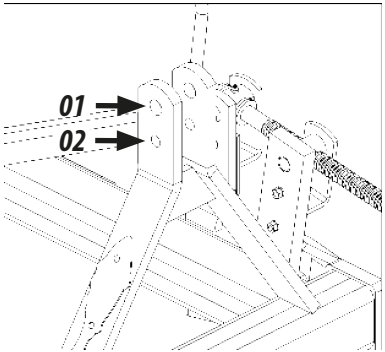

Figures 11

01 - For category I and II tractors.
02 - For medium and heavy soils.
03 - For light soils.

01 - For category II tractors.
02 - For category I tractors.

HORIZONTAL ADJUSTMENT OF DISCS - AF / AFL (FIGURES 12 / TABLE 3)

The **AF / AFL** has horizontal adjustment that can be adjusted when less or more disc rotation is required. To set the adjustments, proceed as follows:

01 - Loosen the bolt (1), flat washer (2) and nut (3).

02 - Then adjust the pipe (4) as required by the work.

03 - After adjusting, replace the bolt (1), flat washer (2) and nut (3).

The horizontal adjustment has 3 positions:

Position 00	Normal
Position 01	Less Rotation
Position 02	More Rotation

Table 03

WARNING

Repeat the same adjustment for the other discs.

Figures 12

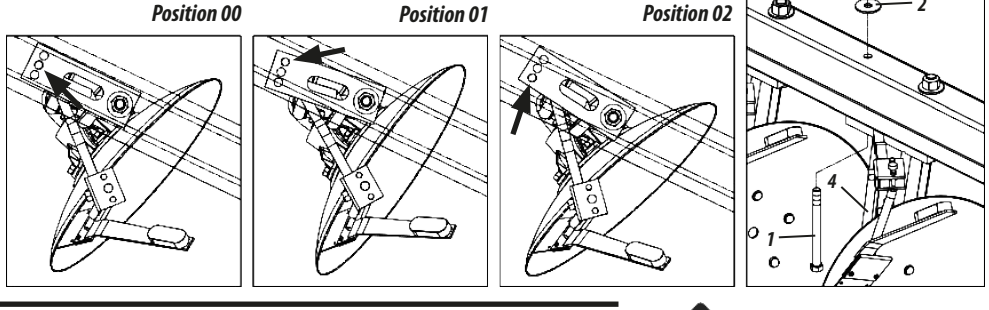

VERTICAL ADJUSTMENT OF DISCS - AF / AFL (FIGURES 13 / TABLE 4)

The **AF / AFL** has vertical adjustment that can be adjusted when the increase or decrease of disc depth is required. To set the adjustments, proceed as follows:

01 - Loosen the bolts (1), pressure washers (2) and nuts (3).

02 - Then adjust the pipe (4) as required by the work.

03 - After adjusting, replace the bolts (1), pressure washers (2) and nuts (3).

Disc in Low Position:	Indicated for loose and normal soils (**B-B1**)
Disc in High Position:	Indicated for hard soils (**A-A1 / A-A2**)

Table 04

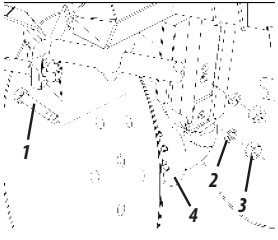

WARNING

Repeat the same adjustment for the other discs.

IMPORTANT

The AF / AFL leaves the factory mounted and adjusted in the B and B1 position.

The vertical adjustment has 3 positions.

Figures 13

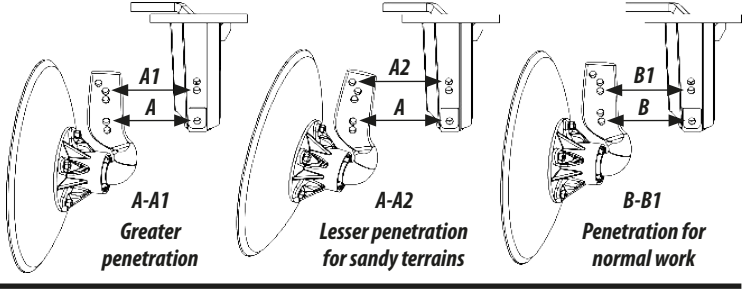

ADJUSTMENT OF THE DIRECTION - AF / AFL (FIGURE 14)

During the work, if the tractor tends to move to the right or left, adjust the guide wheel (1) to the side it tends to move. To adjust the guide wheel (1), proceed as follows:

01 - First, remove the bolt (2), bushing (3), pressure washer (4) and nut (5).

02 - Then loosen the nut (6) and adjust the guide wheel (1) to the right or left, **according to adjustments 1, 0 and 2 of detail "A".**

03 - After adjusting, retighten the nut (6) and replace the bolt (2), bushing (3), pressure washer (4) and nut (5).

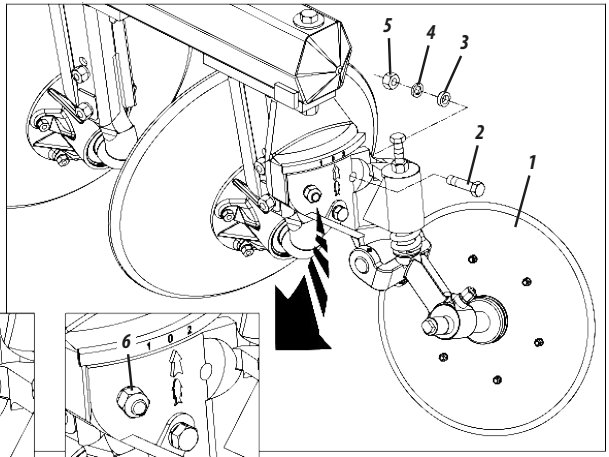

Detail "A"

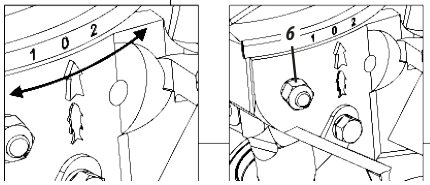

Figure 14

IMPORTANT

Adjust the guide wheel (1) to the side the tractor tends to move.

ADJUSTMENT OF GUIDE WHEEL ANGLE - AF / AFL (FIGURE 15)

Besides allowing greater or lesser penetration of the discs, the guide wheel (1) is responsible for aligning the tractor and plow set, acting as rudder, preventing side deviations.

Adjust the guide wheel (1) so that it remains in the same direction as the coupling tower of the 3rd point of the plow, and the shaft remains at least 20 mm from the support.

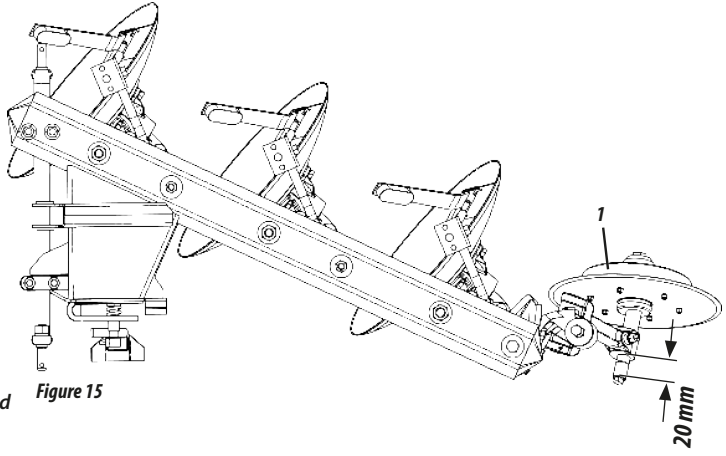

Figure 15

WARNING | ***Do not operate the plow with the shaft mounted less than 20 mm from the support.***

ADJUSTMENT OF CLEANERS – AFL / AFL (FIGURE 16)

The **AF / AFL** has cleaners (1) that can be adjusted according to necessity. To adjust the cleaners (1), proceed as follows:

01 - First loosen the bolt (2).

02 - Then adjust the cleaner (1) according to the distances mentioned below.

03 - Complete by retightening the bolt (2).

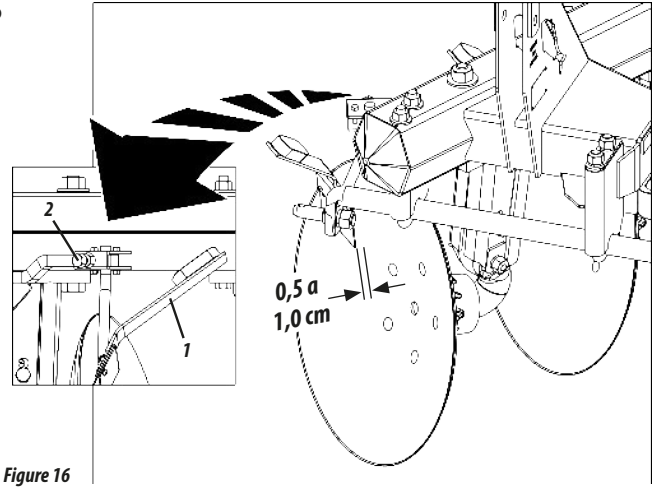

Figure 16

WARNING | ***When adjusting the cleaners (1), these should be 0.5 to 1.0 cm away from the discs.***

IMPORTANT | ***Repeat this adjustment for the other cleaners (1).***

ADJUSTMENT OF CRANK - AF (FIGURE 17)

The **AF** has a crank (1) that should be placed 76 mm to the right side of the plow with the tip facing down, as shown on the ÿgure on the side.

The crank (1) is eccentric, turning it provides bigger or smaller cutting angle.

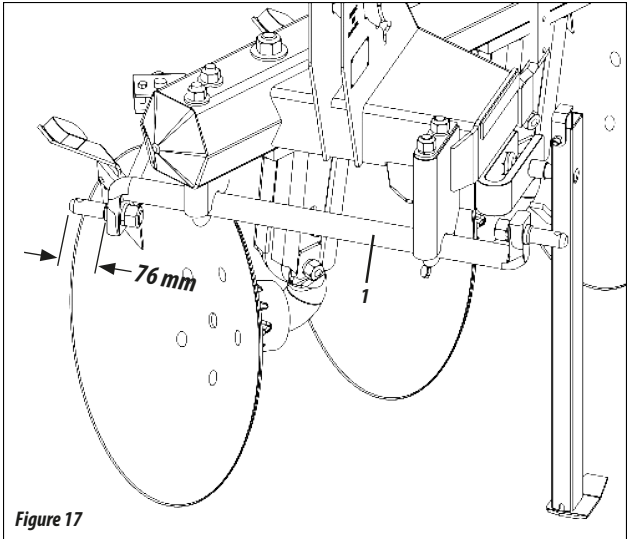

Figure 17

WARNING *Observe that the right side of the crank (1), the tip should face down and the left side should face up.*

IMPORTANT *The indication of the right and left sides are executed by observing the plow from the back.*

ADJUSTMENT OF SPRING PRESSURE - AF / AFL (FIGURE 18 / TABLE 5)

The guide wheel (1) has spring (2) that can have its pressure adjusted according to the type of soil to be worked. To adjust the pressure of the spring (2), proceed as follows:

01 - Tighten the bolt (3) putting more pressure in the spring (2).

02 - Loosen the bolt (3) putting less pressure in the spring (2).

Type of Soil	*Recommendation*	*Reason*
Light and loose soils	Should be worked with greater pressure in the spring.	For the plow to support part of its weight, otherwise the plow will penetrate too much.
Hard soils	Should be worked with lesser pressure in the spring.	For the plow to have greater transfer of weight to the discs, increasing their penetration.

Table 05

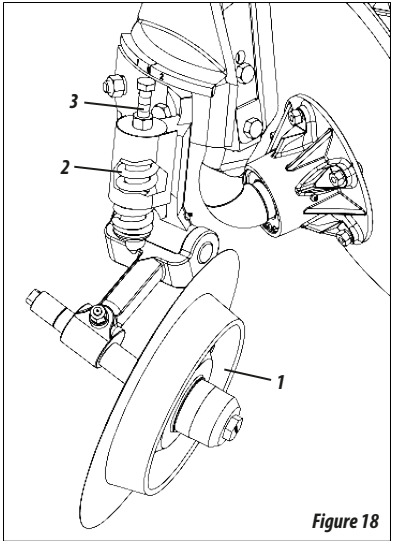

Figure 18

IMPORTANT ***This adjustment providing greater or lesser pressure in the spring, should be performed on the field before starting the works, observing the type of soil to be worked in order to obtain a better plow performance.***

CALCULATIONS

APPROXIMATE HOURLY PRODUCTION - AF / AFL

- Use the formula below to calculate the approximate hourly production of the **AF / AFL** plows:

$$A = \frac{L \times V \times F}{X}$$

WHERE:

A = Area to be worked
L = Working width of the plow (in meters)
V = Average speed of the tractor (in meters/hour)
F = Production Factor - 0.90
X = Value of the hectare - 10,000 m² (The value varies according to the region)

Example: A plow has 4 discs; how many Ha will it produce in one working hour at an average speed of 7 km/h?

A = ?
L = 1,20m
V = 7.000m/h
F = 0,90
X = 10.000 m² (Calculated in hectares)

$$\frac{A = 1{,}20 \times 7.000 \times 0{,}90}{10.000} = 0{,}75 \text{ Ha/h}$$

The hourly production of the AF / AFL plow can vary due to factors that change the work pace (wetness and hardness of the soil, declivity of the land, inadequate adjustments and working speed).

APPROXIMATE HOURLY PRODUCTION TABLE - AF / AFL (TABLE 6)

The formula to calculate the approximate production refers to the calculation of areas to be worked or worked per plow. To know the time spent working an area of known value, divide the value of this area by the hourly production of the plow.

Example: How much time "X" that will be spent on an AF / AFL plow of 4 discs that produces 35 hectares at an average speed of 7 km/h?

Model	Number Discs	Working Width (mm)	Average Speed (m/h)	Production Produção	Approximate Production in:
					Hectares
AF	2	600	7.000	0,90	0,38
AF	3	900	7.000	0,90	0,57
AF	4	1200	7.000	0,90	0,76
AF	5	1500	7.000	0,90	0,95
AFL	3	900	7.000	0,90	0,57
AFL	4	1200	7.000	0,90	0,76
AFL	5	1500	7.000	0,90	0,95

Table 06

$$X = \frac{35\ Ha}{0{,}76\ Ha/h} = \text{approximate 46 hours to work 35 hectares.}$$

The hourly production of AF / AFL plow can vary due to factors that change the work pace such as wetness and hardness of the soil, declivity of the land, inadequate adjustments and working speed, factors that are different from the table above, which were obtained with field work on soils with normal conditions.

OPERATING RECOMMENDATIONS - AF / AFL

- The preparation of the tractor will enable you to save time besides having a better result in the field works. The suggestions below may be useful.

01 - After the first day of work with the AF / AFL, retighten all the bolts and nuts and check the conditions of the pins and locks. Then carry out general retightening of all the screws and nuts after every 10 hours of work.

02 - Adjust the tractor according to the content of the instruction manual, always using the front and rear weights to stabilize the equipment.

03 - When using the AF / AFL, it is important to check the coupling and cross-leveling system to make sure the discs will have the same penetration depth on the ground.

04 - After coupling and leveling, the next adjustments should be performed directly on the field, analyzing the land in terms of texture, wetness and types of operations to be executed with the AF / AFL.

05 - Ensure that the plow operator is trained and skilled to operate it.

06 - The displacement speed of the plow must be carefully controlled according to the conditions of the land.

07 - If you have doubts, never operate or handle the plow, consult Post-Market via
Phone: 0800-152577 or e-mail: posvenda@baldan.com.br

PLOWING SYSTEM

Independent of the shape of the land, the plows are basically performed in two ways:

PLOWING ON FIELDS FROM OUTSIDE TO INSIDE (FIGURE 19)

In this plowing system, a small furrow is formed at the end of plowing, which should be ÿnished by the plow itself, for later leveling with the harrows.

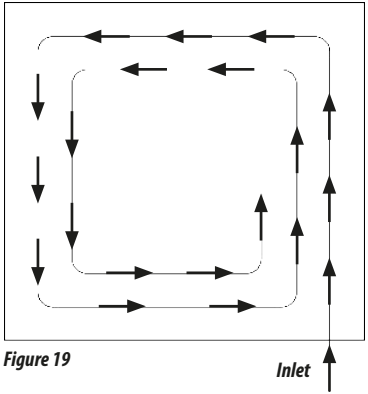

Figure 19

PLOWING ON FIELDS FROM INSIDE TO OUTSIDE (FIGURE 20)

In this plowing system, a ridge is formed at the center of the land that should also be lowered with the use of harrows.

WARNING

Before starting the operations with the plow, completely revise it, retightening all bots, nuts and especially the discs.

Figure 20

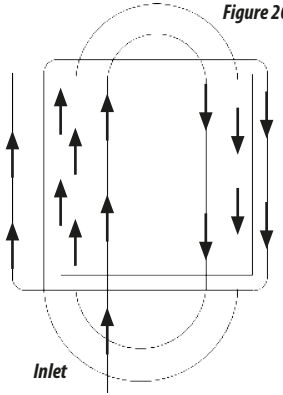

IMPORTANT *Each plowing changes the way the soil is worked, that is, if plowing from outside to inside is executed, the opposite should be performed in the next plantation in order to avoid the formation of irregularities on the surface.*

STRIP PLOWING - AF / AFL (FIGURE 21)

The land can be divided into strips, that is, plow in parts, **as shown in the figure on the side.**

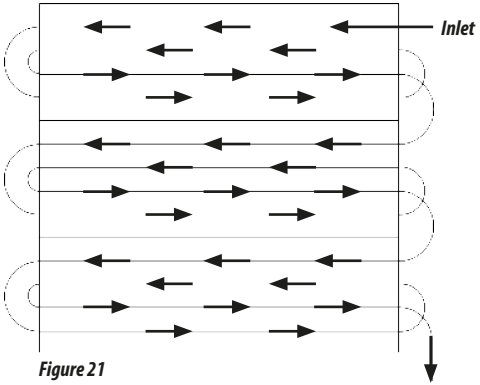

Figure 21

WARNING *Before starting the operations with the plow, completely revise it, retightening all bolts, nuts and especially the discs.*

CONTOUR PLOWING - AF / AFL (FIGURE 22)

This contour plowing system is highly used in terraced areas where the space between two contour lines are worked separately, **as shown in the figure on the side.**

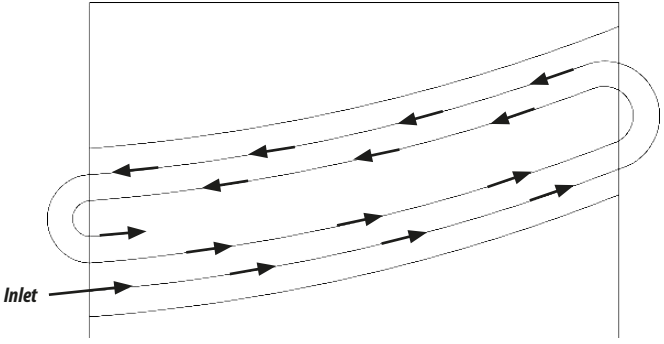

Figure 22

IMPORTANT *In contour plowing, the alternation of the plowing manner should also be observed. In a plantation from outside to inside and in another from inside to outside.*

MAINTENANCE

The **AF / AFL** was developed to provide the maximum yield on the land conditions. Experience has shown that periodic maintenance of certain parts of the plow is the best way to prevent problems; hence we suggest the check.

WARNING ***Constantly check the nuts and bolts, and retighten if necessary. General retightening maintenance of the equipment should be performed every 8 working hours.***

LUBRICATION - AF / AFL (TABLE 7)

Lubrication is indispensable for a good performance and higher durability of the moving parts of the plow, which helps economize maintenance costs.

Before executing the operation, carefully lubricate all greasers, always observing the lubrication intervals in the pages below. Check the quality of the lubricant in relation to its e°ciency and purity, avoiding the use of products contaminated with water, soil and other agents.

IMPORTANT ***In the case of other manufacturers and/or equivalent brands that are not listed on this table, consult the technical manual of the manufacturer.***

TABLE OF GREASE AND EQUIVALENT PRODUCTS

Manufacturer	*Types of grease recommended*
Petrobrás	Lubrax GMA 2
Atlantic	Litholine MP 2
Ipiranga	Super Graxa Ipiranga Ipíranga Super Graxa 2 Ipiflex 2
Castrol	LM 2
Mobil	Mobilgrease MP 77
Texaco	Marfak 2 Agrotex 2
Shell	Retinax A Alvania EP 2
Esso	Multipurpose grease H
Bardahl	Maxlub APG 2 EP

Table 07

LUBRICATE EVERY 10 HOURS OF WORK
AF / AFL (FIGURE 23)

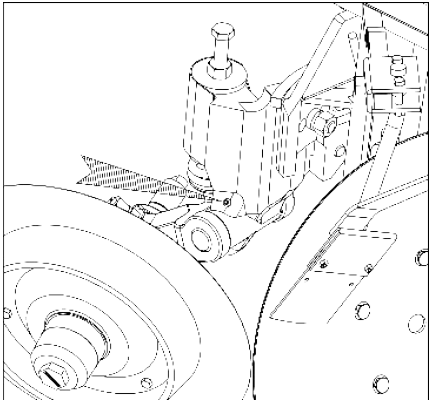

Figure 23

LUBRICATE EVERY 50 HOURS OF WORK
AF / AFL (FIGURES 24)

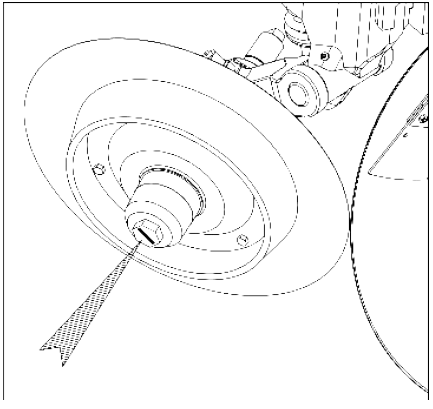

Figures 24

LUBRICATE EVERY 50 HOURS OF WORK (CONTINUATION) - AF / AFL (FIGURES 24)

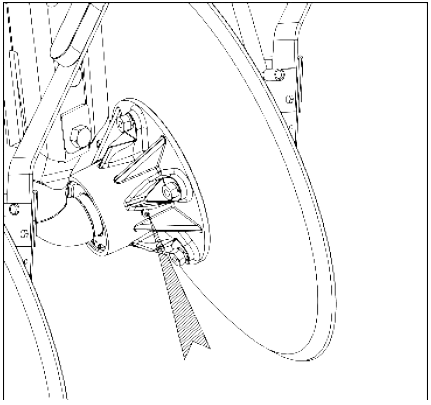

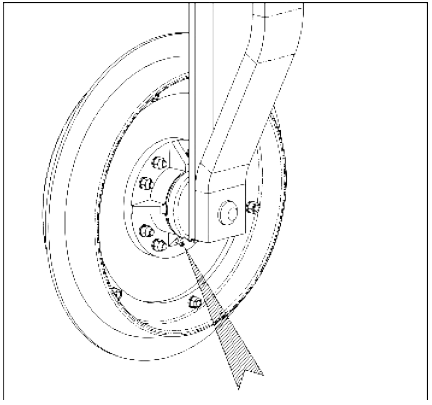

Figures 24

Depth Wheel (Optional)

WARNING *When lubricating the AF / AFL, do not use excess quantity of new grease. Add a sufficient amount.*

MAINTENANCE

PRECAUTIONS - AF / AFL

Before each work, check the conditions of all pins, bolts, hubs, discs and cleaners. Retighten them when necessary.

The displacement speed must be carefully controlled according to the conditions of the land.

The **AF / AFL** are used in various applications, requiring know-how and attention during its handling.

Only site conditions can determine the best way of operating the **AF / AFL**.

Use the suitable methods and tools to mount or dismount any part of the **AF / AFL**.

Always check if the parts do not present wears. If replacement is required, always demand for original Baldan parts.

IMPORTANT | ***Appropriate and periodic maintenance are necessary to ensure the long life of the equipment.***

GENERAL CLEANING - AF / AFL

When storing the **AF / AFL**, carry out general cleaning and wash it. Check if the paint is not worn, otherwise apply a general coat of paint, apply protection oil and completely lubricate the **AF / AFL**.

Completely lubricate the plow. Check all the moving parts of the **AF / AFL** for wear or looseness and perform the necessary adjustments or replacement of the parts, leaving the plow ready for the next operation.

After all the maintenance cares, keep your **AF / AFL** on a flat surface, in a sheltered and dry location away from animals and children. We recommend washing the **AF / AFL** at the start of the works.

OPTIONAL

The **AFL** model plow has an option that can be purchased according to the work necessity.

DEPTH WHEEL - AFL (FIGURE 25)

The depth week with crank is used to keep a uniform penetration of the plow and also to sustain it especially when the hydraulic of the tractor does not have automatic undulation control or when a follow-up of the surface variations is desired.

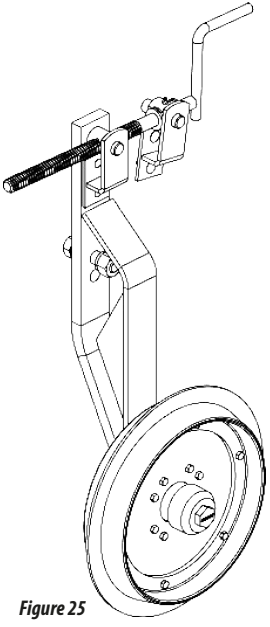

Figure 25

PRODUCT IDENTIFICATION - AF / AFL (FIGURE 26)

- To consult the parts catalog or request for technical service from Baldan, always indicate the model (1), serial number (2) and date of manufacture (3) informed on the identification plate of the **AF / AFL**.

ALWAYS DEMAND ORIGINAL BALDAN PARTS

Figure 26

WARNING

The drawings contained in this instruction manual are for illustrative purposes only. To enable a better view and detailed instruction, some drawings in this manual had the safety devices removed (covers, protections, etc.). Never operate the seed drill without these devices.

PUBLICATIONS

Code: 60550800163
CPT: AFL11617

CONTACT

In case of doubts, never operate or handle the AF / AFL, consult Post-Market.
Phone : 0800-152577
E-mail: posvenda@baldan.com.br

IDENTIFICATION

PRODUCT IDENTIFICATION

Identify the data below in order to always have the correct information on the service life of your **AF / AFL**.

Owner: _____

Dealer: _____

Farm: _____

City: _____ *State:* _____

Warranty Certificate No.: _____

Model: _____

Serial Number: _____

Date of Purchase: _____ / _____ / _____ *Invoice Number:* _____

NOTES

WARRANTY CERTIFICATE

BALDAN IMPLEMENTOS AGRÍCOLAS S/A guarantees to dealer the normal functioning of the implement for a period of six (6) months as from the date of delivery on the sales invoice to the first consumer.
During this period **BALDAN** is committed to repairing material and/or manufacturing defects under its responsibility, which means that manpower, freights and other expenses are under dealer responsibility.
During the warranty period, the request and replacement of eventual defective parts should be executed by the regional dealer, who will send the defective part to **BALDAN** for analysis.
When this procedure is not possible and the problem solving capacity of the dealer is exhausted, the dealer must request the support from **BALDAN** Technical Assistance through the specific form distributed to dealers.
After Baldan Technical Assistance analyzes the replaced items and concludes that it is not a warranty issue, the dealer becomes responsible for the costs related to the replacement as well as the expenses with material, trip including accommodation and meals, accessories, lubrication used and other expenses resulting from calling Technical Assistance, and Baldan is authorized to make the respective billing in the name of the dealer.
Any repair made by the dealer on the product during the warranty period will only be authorized by **BALDAN** through prior presentation of the budget describing the parts and manpower to be executed.
The product subjected to repairs or modifications at official dealers not belonging to the network of **BALDAN** dealers as well as the application of non-ge-nuine parts or components to the user product are not included in this deed.
The present warranty becomes void when it is conÿrmed that the defect or damage is the result of undue use of the product, non-observation of the instructions or the inexperience of the operator.
It is agreed that the present warranty does not cover tires, polyethylene hoppers, cardans, hydraulic components, etc, which are equipment under warranty by their manufacturers.
The manufacturing and/or material defects subject to this warranty deed will not include, under any circumstance, reason for termination of purchase and sales contract or for indemniÿcation of any kind.
BALDAN reserves the right to change and/or improve the technical characteristics of its products without prior warning and without obligation of doing so with the previously manufactured products.

CERTIFICATE OF INSPECTION AND DELIVERY

- ***SERVICE BEFORE DELIVERY***: This implement was carefully prepared by the sales organization, inspected in all its parts according to the prescriptions of the manufacturer.
- ***DELIVERY SERVICE***: The user was informed on the effective warranty deeds and instructed on the use and maintenance precautions.
- I confirrm that I was informed on the effective warranty terms and instructed on the correct use and maintenance of the implement.

Implement: _____ *Serial Number:* _____

Date: _____ *Invoice Number:* _____ *Dealer:* _____

City: _____ *State:* _____ *Zip Code:* _____

Owner: _____ *Phone:* _____

Address: _____ *Number:* _____

City: _____ *State:* _____

E-mail: _____ *Date of Sale:* _____

1st - Owner

Dealer Signature / Stamp _____

CERTIFICATE OF INSPECTION AND DELIVERY

- ***SERVICE BEFORE DELIVERY***: This implement was carefully prepared by the sales organization, inspected in all its parts according to the prescriptions of the manufacturer.
- ***DELIVERY SERVICE***: The user was informed on the effective warranty deeds and instructed on the use and maintenance precautions.
- I confirrm that I was informed on the effective warranty terms and instructed on the correct use and maintenance of the implement.

Implement: _____ *Serial Number:* _____

Date: _____ *Invoice Number:* _____ *Dealer:* _____

City: _____ *State:* _____ *Zip Code:* _____

Owner: _____ *Phone:* _____

Address: _____ *Number:* _____

City: _____ *State:* _____

E-mail: _____ *Date of Sale:* _____

2nd - Dealer

Dealer Signature / Stamp _____

CERTIFICATE OF INSPECTION AND DELIVERY

- ***SERVICE BEFORE DELIVERY***: This implement was carefully prepared by the sales organization, inspected in all its parts according to the prescriptions of the manufacturer.
- ***DELIVERY SERVICE***: The user was informed on the effective warranty deeds and instructed on the use and maintenance precautions.
- I confirrm that I was informed on the effective warranty terms and instructed on the correct use and maintenance of the implement.

Implement: _____ ***Serial Number:*** _____

Date: _____ ***Invoice Number:*** _____ ***Dealer:*** _____

City: _____ ***State:*** _____ ***Zip Code:*** _____

Owner: _____ ***Phone:*** _____

Address: _____ ***Number:*** _____

City: _____ ***State:*** _____

E-mail: _____ ***Date of Sale:*** _____

2rd - Manufacturer

Dealer Signature / Stamp _____

Please send this filled out copy to BALDAN within a maximum of 15 days.

BALDAN

Avenida Baldan, 1500
Nova Matão
15.993-900
Matão/SP - Brasil
sac@baldan.com.br
export@baldan.com.br

+55 16 3221 6500
baldan.com.br