Instruction
Manual

SKADI

Baldan Pantographic Winter Seeder

BALDAN

▪ Presentation

We thank you for preference and congratulate you on the the excellent choice you have just made, as you have purchased a product made with **BALDAN IMPLEMENTOS AGRÍCOLAS S/A** technology.

This manual will guide you through the procedures necessary; from purchase to operating, safety and maintenance procedures.

BALDAN warrants that it has delivered this implement to the retailer complete and in perfect condition.

The retailer was responsible for the custody and conservation during the period in its possession, as well as for the assembly, retightening, lubrication, and overhaul.

At the technical delivery, the retailer should advise the user customer about maintenance, safety, their obligations in any technical assistance, the strict observance of the warranty term and the reading of the instruction manual.

Any warranty service claim should be made to the retailer where the implement was purchased.

We reiterate the need for careful reading of the warranty certificate and compliance with all items in this manual, as doing so will increase the life of your implement.

Instruction
Manual

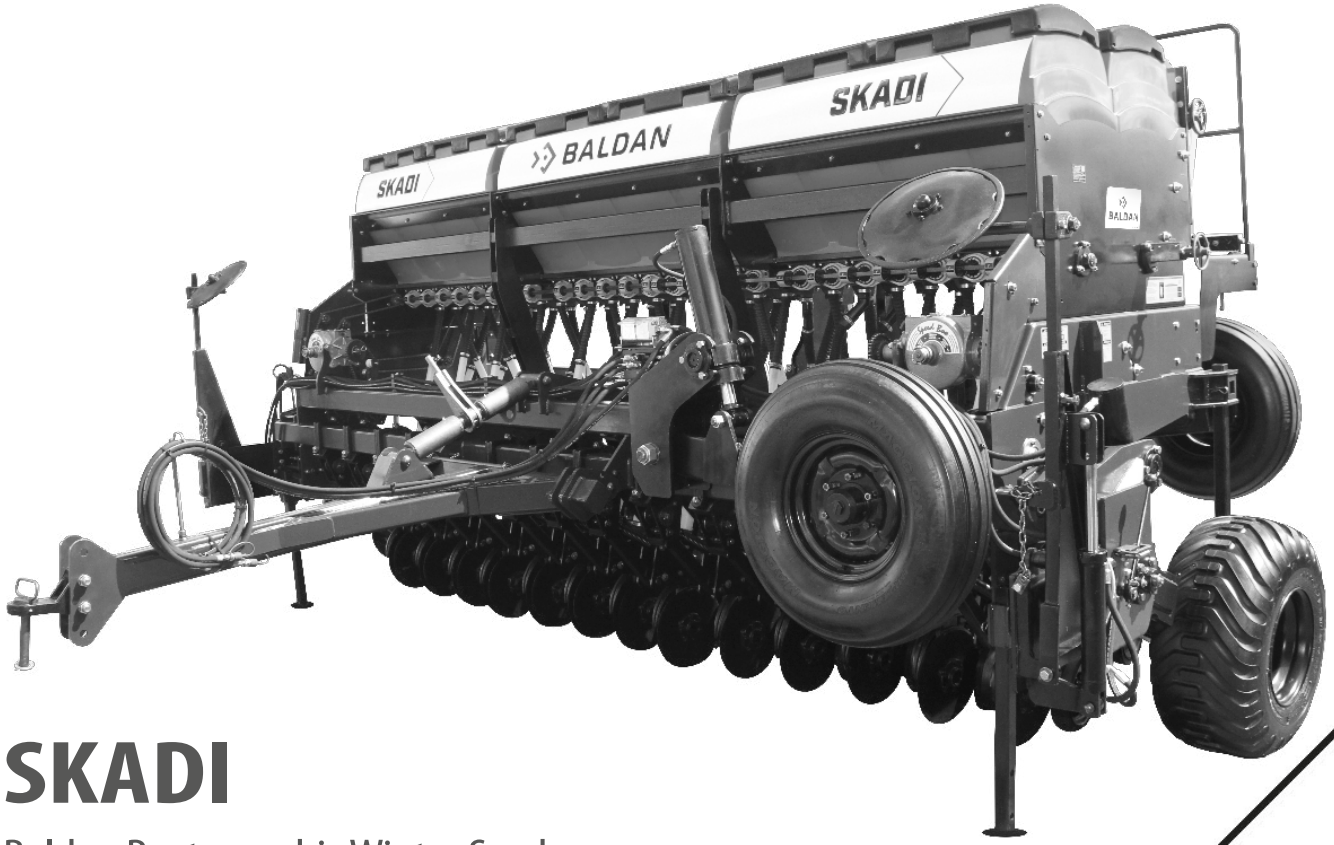

SKADI

Baldan Pantographic Winter Seeder

BALDAN IMPLEMENTOS AGRÍCOLAS S/A.
CNPJ: 52.311.347/0009-06
Insc. Est.: 441.016.953.110

Scan the QR Code on the identification plate of your device and access this Instruction Manual online.

BALDAN

Index

BALDAN WARRANTY **09**
GENERAL INFORMATION **10**
To the owner *10*
SAFETY RULES **11**
To the operator ..... *11 - 14*
WARNINGS ..... **15 - 16**
COMPONENTS **17**
SKADI - Baldan Pantographic Winter Seeder *17*
DIMENSIONS **18**
SKADI - Without front line marker / Without side transport *18*
SKADI - With front line marker / With side transport *19*
SPECIFICATIONS **20**
SKADI - Baldan Pantographic Winter Seeder *20*
ASSEMBLY **21**
Assembling the coupling head *21*
Assembling the fine seed box (Optional) ..... *22 - 23*
Assembling the hydraulic system without front line marker - SKADI 5000 ..... *24*
Assembling the hydraulic system without front line marker - SKADI 6000 ..... *25*
Assembling the hydraulic system without front line marker - SKADI 7000 ..... *26*
Front line marker assembly (Optional) *27*
Assembling the hydraulic system with front line marker (Optional) - SKADI 5000 ..... *28*
Assembling the hydraulic system with front line marker (Optional) - SKADI 6000 ..... *29*
Assembling the hydraulic system with front line marker (Optional) - SKADI 7000 ..... *30*
Assembling the side transport (Optional) ..... *31 - 34*
Assembling the hydraulic system of the side transport (Optional) - SKADI 5000 / 6000 / 7000 ..... *35*
HITCH **37**
Tractor hitch *37*
LEVELING **38**
Seeder leveling *38*
TRANSPORTATION **39**
Transporting the SKADI without side transport system ..... *39 - 40*
Transporting the SKADI with side transport system (Optional) ..... *41 - 46*
WORK **47**
Working with the SKADI without a side transport system ..... *47 - 49*
Working with the SKADI with side transport system (Optional) ..... *50 - 54*
Use of the ladder *55*

Index

ADJUSTMENTS **56**
Line markers adjustment *56*
Adjusting the line marker discs *57*
Adjusting the line marker bar *57*
Ratchet adjustment *58*
SYSTEMS **59**
Trimming system *59*
ETD (Electronic Dosing Table) - Optional *60*
VISUM System (Fertilizer and Fine Grains) - Optional *60*
SEED DISTRIBUTION SYSTEM **61**
Seed regulation ..... *61 - 62*
Adjusting for seed distribution ..... *62 - 63*
Seed batcher scale *63*
To calculate the amount of fertilizer and seed for Ha or AA the operator must: *63*
Regulation of distribution of the fine seed box "Pasture" (Optional) *64*
FERTILIZER DISPENSING SYSTEM **65**
Fertisystem fertilizer conductor *65*
Speed Box *66*
Regulation for fertilizer dispensing *66*
FERTILIZER distribution table ..... *67 - 68*
CALCULATIONS **69**
Practical calculation for fertilizer dispensing *69*
Practical test to measure the amount of fertilizer and seed dispensing *70*
PLANTING LINES **71**
Planting line models *71*
ADJUSTING THE LINES **72**
Line pressure regulation *72*
Double disc cleaners adjustment *73*
Depth limiting wheel adjustment ..... *73 - 74*
Depth the depth limiting wheel angle *75*
OPERATIONS **76**
Recommendations for operation *76*
MAINTENANCE **77**
"Non-drinking" water tank *77*
Tool box *77*
Tire pressure *78*

Index

Lubrication *79*
Lubrication every 10 hours of work ..... *79 - 81*
Lubrication every 30 hours of work *81*
Lubrication every 60 hours of work *82*
Chain tension *83*
Oscillanting tensioner *83*
Operational maintenance ..... *84 - 85*
Maintenance of the seed batcher *86*
Conductor fixation tube Fertisystem *87*
Fertisystem conductor maintenance tube *88*
Spring step 3/4" - Conductor Fertisystem *88*
Changing the tires SKADI 5000 and 6000 ..... *89 - 90*
Changing the tires SKADI 7000 ..... *91 - 92*
Care *93*
Care during planting *93*
General cleaning *94*
Seeder conservation ..... *94 - 95*
LIFTING **96**
Lifting warnings ..... *96 - 97*
Inspection of lock hooks, chains and slings *98*
Storage *98*
Lifting the SKADI ..... *99 - 100*
OPTIONAL **101**
Optional accessories ..... *101 - 102*
OPERATION MANUAL ETD (ELECTRONIC DOSING TABLE) - OPTIONAL **103**
Presentation *103*
Assembling the magnets on the main shaft *104*
Assembling the speed sensor *104*
Speed sensor installation *105*
Identification *105*
Settings menu *106*
Sensor calibration *106*
Machine *107*
Sensor calibration *107*
Seed rate *108*
Fertilizer rate ..... *108 - 109*

Index

Total calculation *109*
Calibrate fertilizer ..... *109 - 110*
F3 Hobbs meter *111*
F4 Hectometer *111*
Settings menu *112*
Sensor calibration ..... *112 - 113*
Machine ..... *113 - 114*
Time above maximum speed *115*
MANUAL VISUM FERTILIZER AND FINE GRAIN VISUM - OPTIONAL **116**
Presentation *116*
Specifications *117*
Addressing ..... *118 - 119*
Operation ..... *120 - 121*
Removing and reinstalling ..... *122 - 126*
Function description ..... *127 - 129*
Troubleshooting *130*
Cleaning and storage *131*
Discard *131*
IDENTIFICATION **132**
Identification plate *132*
Product Identification *132*
NOTES **133**
CERTIFICATE **134**
Certificate of warranty ..... *134 - 136*

Baldan Warranty

BALDAN IMPLEMENTOS AGRÍCOLAS S/A ensures the dealer normal performance of the implement for a period of six (6) months as of the delivery date on the retail invoice to the first final consumer.

During this period, **BALDAN** undertakes to repair defects in material and/or of manufacture of its liability, including labor, freight and other expenses of the dealer's liability.

In the warranty period, request and replacement of eventual defective parts shall be made to the dealer of the area, who will submit the faulty piece to **BALDAN** analysis.

When this procedure is not possible and the resolving capacity of the dealer is exhausted, the dealer will request the support of **BALDAN** Technical Assistance through a specific form distributed to dealers.

After analyzing the replaced items by **BALDAN** Technical Assistance, and concluding that it is not a warranty, then the dealer will be responsible for the costs related to the replacement; as well as material expenses, travel including accommodation and meals, accessories, lubricant used and other expenses arising from the call out to Technical Assistance, and **BALDAN** company is authorized to carry the respective invoice in the name of the resale.

Any repairment carried in the product within the dealer warranty deadline will only be authorized by **BALDAN** upon previous budget presentation describing parts and workforce to be executed.

The product is excluded from this term if it is repaired or modified by representatives not belonging to the **BALDAN** dealer network, as well as the application of non-genuine parts or components to the user's product.

This warranty is void where it is found that the defect or damage is caused by improper use of the product, failure to follow instructions or inexperience of the operator.

It is agreed that this warranty does not cover tires, polyethylene tanks, cardan, hydraulic components, etc., which are equipment guaranteed by their manufacturers.

Manufacturing and/or material defects, object of this warranty term, will not constitute, under any circumstances, grounds for termination of a purchase agreement, or for indemnification of any nature.

BALDAN reserves the right to change and/or perfect the technical characteristics of its products, without previous notice, and without obligation to proceed in the same way with the products previously manufactured.

General Information

• To the owner

BALDAN IMPLEMENTOS AGRÍCOLAS S/A is not responsible for any damaged caused by accident due to usage, transportation, or in the improper or incorrect transportation of its implement, whether by negligence and/or inexperience of any person.

Only people with complete knowledge of the tractor and the implement should carry their transportation and operation.

BALDAN is not responsible for any damaged caused in unpredictable or unrelated situations to the normal use of the implement.

The incorrect handling of this equipment may result in severe or fatal accidents. Before running the equipment, carefully read the instructions contained in this manual. Make sure that the person responsible for the operation is instructed as the correct and safe handling. Also make sure that the operator has read and understood the instructions manual of the product.

⚠ ATTENTION

NR-31 - SAFETY AND HEALTH AT WORK IN AGRICULTURE, LIVESTOCK FARMING, FORESTRY, FOREST EXPLORATION AND AQUACULTURE.

This Regulatory Standard has the purpose of establishing precepts to be observed in the organization and work environment, compatible to the planning and development of agriculture, livestock, forestry, forest exploitation and aquaculture with safety and health and work environment.

MR. OWNER OR OPERATOR OF THE EQUIPMENT.
Read and carefully comply with provisions of NR-31.

For more information, refer to the site and read NR-31 in full.
http://portal.mte.gov.br/legislacao/normas-regulamentadoras-1.htm

Safety Rules

• To the operator

THIS SYMBOL INDICATES AN IMPORTANT SAFETY WARNING. IN THIS MANUAL, WHENEVER YOU FIND IT, PLEASE READ THE FOLLOWING MESSAGE CAREFULLY AND WATCH OUT FOR POTENTIAL PERSONAL ACCIDENTS.

ATTENTION

Read the instruction manual carefully in order to get to know the recommended safety practices.

ATTENTION

Only start operating the tractor when properly seated and with a fastened seat belt.

ATTENTION

Do not make adjustments with the seeder in operation. When doing any service on the seeder, first turn off the tractor.
Use appropriate tools.

ATTENTION

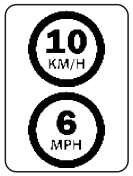

For greater safety when transporting SKADI, do not exceed a speed of 10 Km/h or 6 MPH, avoiding the risk of damage and accidents.

ATTENTION

Do not work with the tractor if its front is not sufficiently weighted for the rear equipment. If it tends to lift, add weights or ballasts to the front of the machine or front wheels.

ATTENTION

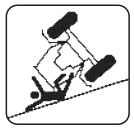

There is a risk of serious injury due to tipping when working on sloping terrains. Do not use excessive speed.

ATTENTION

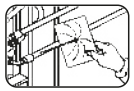

When checking hoses for leaks, use a piece of cardboard or wood, never use your hands. Avoid incision of fluid in the skin.

ATTENTION

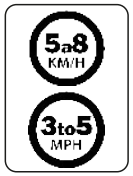

For greater efficiency and safety, work with SKADI at speeds between 5 to 8 km/h or 3 to 5 MPH, avoiding the risk of damage and accidents.

NOTE: It is necessary to maintain a constant speed in every planting.

ATTENTION

Do not carry people on or inside the tractor or on the equipment.

ATTENTION

Before performing any maintenance on your equipment, make sure that it is properly stopped. Avoid getting run over.

ATTENTION

Always keep access and work places clean, such as from oil or grease, as they may cause accidents.

ATTENTION

Before working with or transporting the seeder, check for people or obstructions near the seeder.

▪ Safety Rules

⚠ ATTENTION | FOLLOW ALL RECOMMENDATIONS, WARNINGS, AND RECOMMENDED SAFETY PRACTICES IN THIS MANUAL, UNDERSTAND THE IMPORTANCE OF YOUR SAFETY. ACCIDENTS MAY CAUSE DISABILITIES OR EVEN DEATH. REMEMBER, ACCIDENTS CAN BE AVOIDED!

⚠ ATTENTION

Avoid heating parts near fluid lines.
The heating can cause the material to be brittle, ruptures, and discharges of the pressurized fluid, which can cause burns and injuries.

⚠ ATTENTION

Avoid accidents caused by the intermittent action of line markers.
When activating the seeder, check that there are no people under the line markers or in their area of action.

⚠ ATTENTION

Improper waste disposal affects the environment and ecology as it will pollute rivers, canals, or the soil.
Find out how to properly recycle or dispose of waste.

PROTECT THE ENVIRONMENT!

⚠ ATTENTION

Keep the articulation area free while the seeder is in operation.
In sharp turns, keep the tractor wheels from touching the head.

⚠ ATTENTION

Be careful when handling the seeder support foot, as there is a risk of accidents.

⚠ ATTENTION

Do not operate the seeder if the transmission guards are not properly attached.
Only remove guards to proceed with gear replacement, put them back immediately.
Do not make adjustments with the seeder in motion.

⚠ ATTENTION

Do not drink water from the tank as it is unfit for human consumption "Non-Drinking Water". Ignoring this warning could cause health risks.

⚠ ATTENTION

Always stay away from the active elements of the seeder (discs), they are sharp and can cause accidents.
When carrying out any work on discs, wear safety gloves on your hands.

⚠ ATTENTION

Never weld the wheel with a mounted tire, as heat can increase air pressure and cause the tire to explode.
When inflating a tire, position yourself next to the tire, never in front of it.
When inflating the tire, always use a containment device (inflation cage).

Safety Rules

ATTENTION FOLLOW ALL RECOMMENDATIONS, WARNINGS, AND RECOMMENDED SAFETY PRACTICES IN THIS MANUAL, UNDERSTAND THE IMPORTANCE OF YOUR SAFETY. ACCIDENTS MAY CAUSE DISABILITIES OR EVEN DEATH. REMEMBER, ACCIDENTS CAN BE AVOIDED!

ATTENTION

Pressurized hydraulic oil under may cause serious injury if leaks occur.
Periodically check the condition of the hoses. If there is evidence of leaks, replace them immediately. Before connecting or disconnecting hydraulic hoses, relieve system pressure by activating the control with the tractor off.

ATTENTION

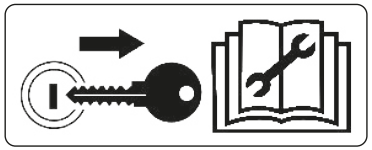

Remove the ignition key before performing any maintenance on the seeder. Protect yourself from possible injury or death, caused by an unexpected start of the seeder.
If the seeder is not properly engaged, do not start the tractor.

ATTENTION

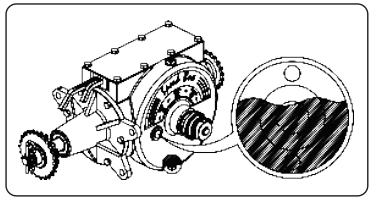

Check the oil level daily.
Change the Speed Box oil after the first 30 hours of work, then every 1500 hours, always using ISO VG 150 mineral oil at 40°C (amount of oil used 1.8 liters).
Only use the original fuse from the factory, as only this one has a controlled hardness.

▪ Safety Rules

• PPE Equipment

⚠ ATTENTION | **DO NOT WORK WITH THE PLANTER WITHOUT FIRST WEARING PPE (SAFETY EQUIPMENT). IGNORING THIS WARNING MAY CAUSE HEALTH DAMAGES, SERIOUS ACCIDENT, OR DEATH.**

When performing certain procedures with the seeder, place the following PPE (Safety Equipment) below:

NOTE | **All PPEs (Safety Equipment) must have an authenticity certificate.**

IMPORTANT

The safety practice must be carried out in all stages of work with the seeder, thus avoiding accidents such as impact of objects, falling, noise, cuts and ergonomics, that is, the person responsible for operating the seeder is subject to internal and external bodily damage.

▪ Warnings

⚠ When operating the seeder, do not allow people to remain too close or on top of it.

⚠ When servicing the machine, wear PPE.

⚠ Do not wear loose clothing, as they may become entangled in the seeder.

⚠ When starting the tractor engine, be properly seated in the operator's seat and aware of the full knowledge of the correct and safe handling of both the tractor and the seeder. Always put the shift lever in the neutral position, disconnect the control gear from the PTO and put the hydraulic controls in the neutral position.

⚠ Do not start the tractor engine indoors without adequate ventilation as exhaust fumes are harmful to health.

⚠ When maneuvering the tractor to engage the seeder, make sure you have the necessary space and that no one is very close, always do the maneuvers at idle and be prepared to brake in an emergency.

⚠ Do not make adjustments with the seeder in operation.

⚠ When working on slopes, be careful to always maintain the required stability. In the event of imbalance, reduce acceleration, turn the wheels to the side of the slope and never raise the seeder

⚠ Always drive the tractor at safety compatible speeds, especially when working on rough or sloping terrain, always keep the tractor hitched.

⚠ When driving the tractor on roads, keep the brake pedals interconnected.

⚠ Do not work with the tractor with a light rear. If the rear tends to lift, add more weights to the rear wheels.

⚠ When leaving the tractor, shift to neutral and set the parking brake.

⚠ Any and all maintenance on the seeder must be done with the seed stopped and the tractor turned off.

⚠ All refueling or inspection must be done with the seeder stopped and the tractor turned off, using the means of safe access.

⚠ Do not drive on highways, especially at night. Use warning signs all along the way.

⚠ If it is necessary to travel with the seeder on highways, consult the traffic authorities.

⚠ Do not allow people who have not been trained to use the seeder, that is, who do not know how to operate it correctly.

⚠ Do not transport or work with the seeder close to obstacles, rivers or streams.

▪ Warnings

⚠ Transporting people on self-propelled machines and implements is prohibited.

⚠ Changes to the original characteristics of the seeder are not authorized, as they may alter safety, operation, and affect the useful life.

⚠ Read carefully all the safety information in this manual and on the seeder.

⚠ Only operate the seeder if all guards are installed and correctly.

⚠ Do not under any circumstances remove the seeder protection components.

⚠ Always check that the seeder is in perfect condition. In case of any irregularity that could interfere with the operation of the seeder, provide proper maintenance before any work or transport.

⚠ Maintenance and especially inspection in risk areas of the seeder, must be carried out only by a trained or qualified worker, observing all safety guidelines. Before starting maintenance, disconnect all drive systems from the seeder.

⚠ Periodically check all components of the seeder before using it.

⚠ According to the equipment used and the working conditions in the country or in areas of maintenance, precautions are necessary. Baldan has no direct control over precautions, so it is the responsibility of the owner to put the safety procedures into practice while working with the seeder.

⚠ Check the minimum tractor power recommended for each seeder model. Only use tractors with power and ballast compatible with the load and terrain topography.

⚠ During the transport of the seeder, travel at speeds compatible with the terrain and never exceeding 10 km/h, this reduces maintenance and consequently increases the life of the seeder.

⚠ Alcoholic beverages or some medications may cause loss of reflexes and change the operator's physical condition. Therefore, never operate this seeder under the use of these substances.

⚠ Read or explain all procedures in this manual to a user who cannot read.

If in doubt, contact After Sales.
Telephone: 0800-152577 / E-mail: posvenda@baldan.com.br

▪ Components

• SKADI - Baldan Pantographic Winter Seeder

1. Pillar
2. Dividing valve
3. Regulator
4. Hose support
5. Shackle
6. Coupling head
7. Telescopic conductor
8. Cutting Disc
9. Speed Box
10. Front support bracket
11. Manual container
12. Tire drive cylinder
13. Depth limiting wheel
14. Tires
15. Rear support bracket
16. Seed regulator
17. Platform
18. Platform handrail
19. Seed tank
20. Fertilizer tank
21. Locking lever

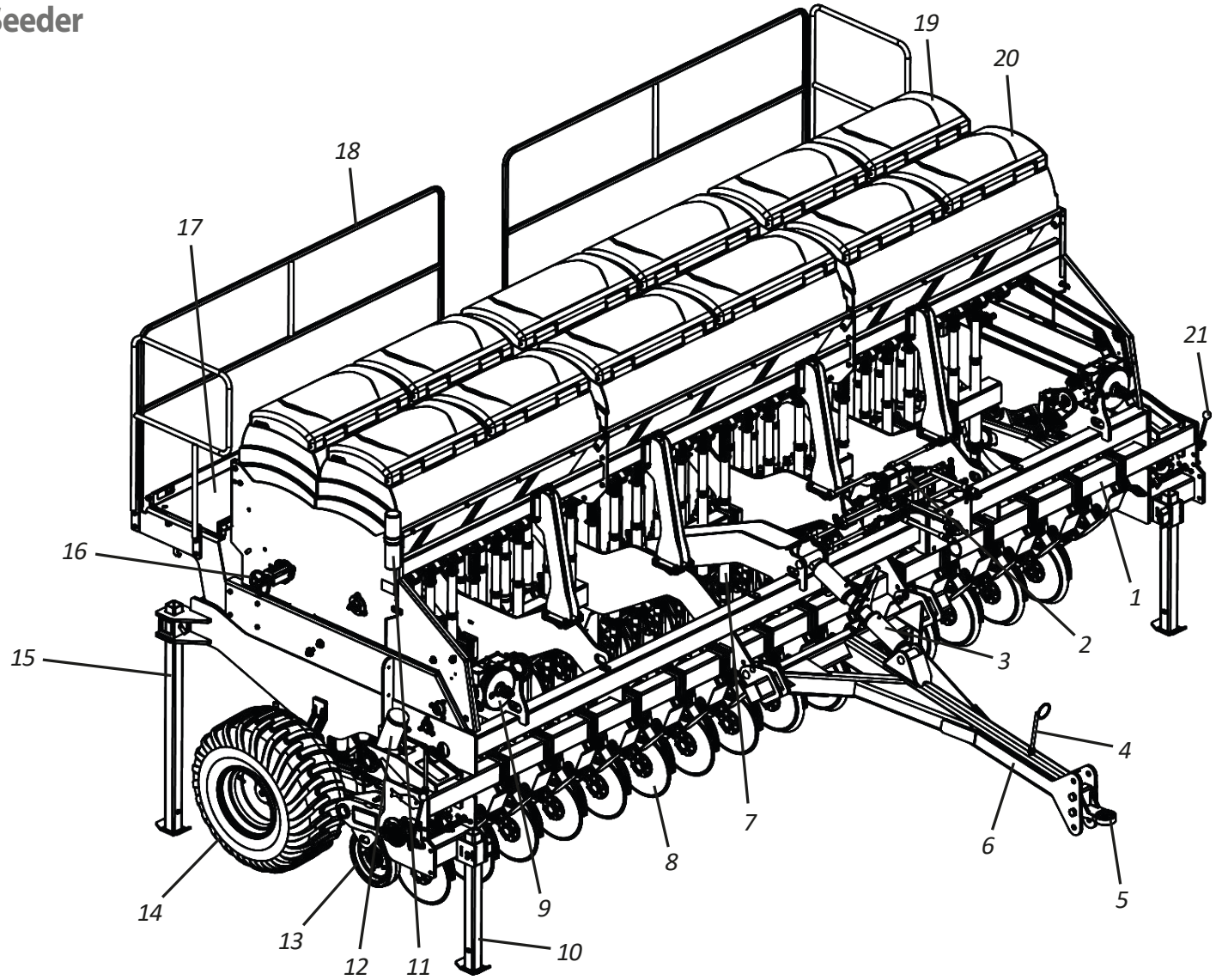

▪ Dimensions

- **SKADI - Without front line marker / Without side transport**

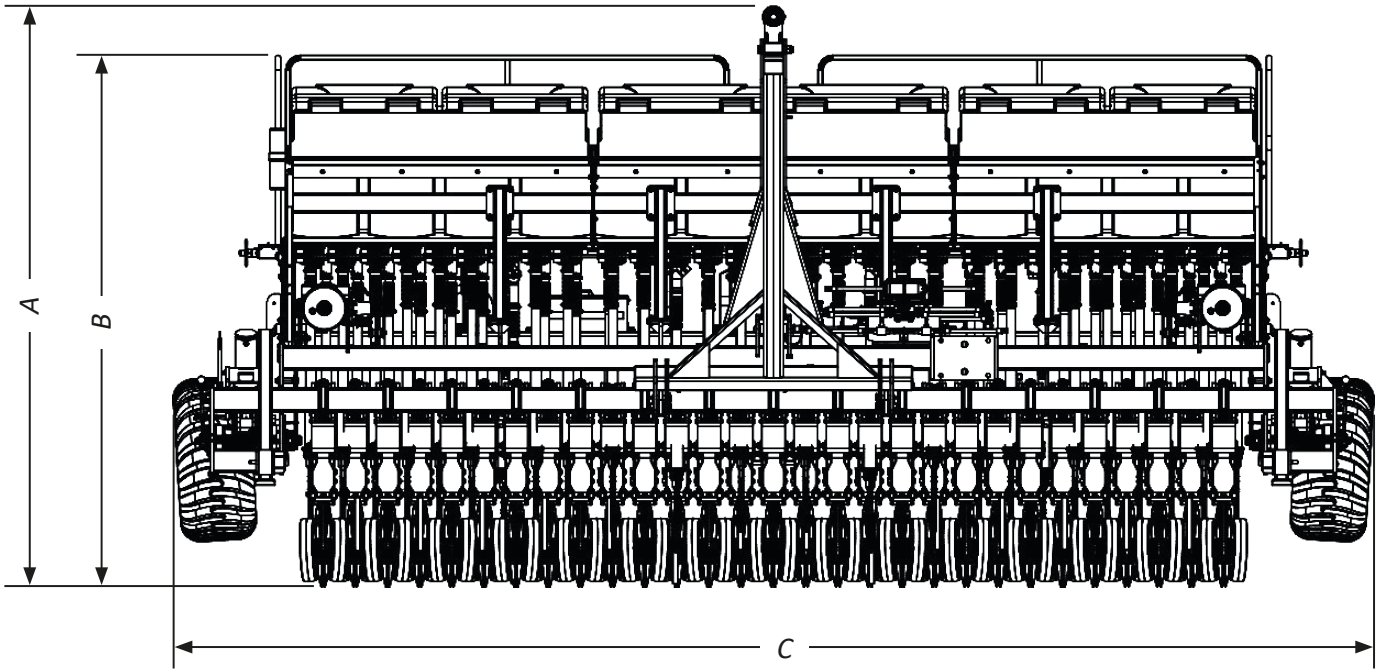

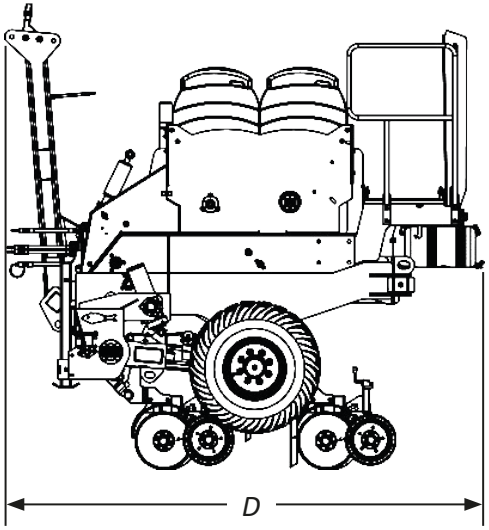

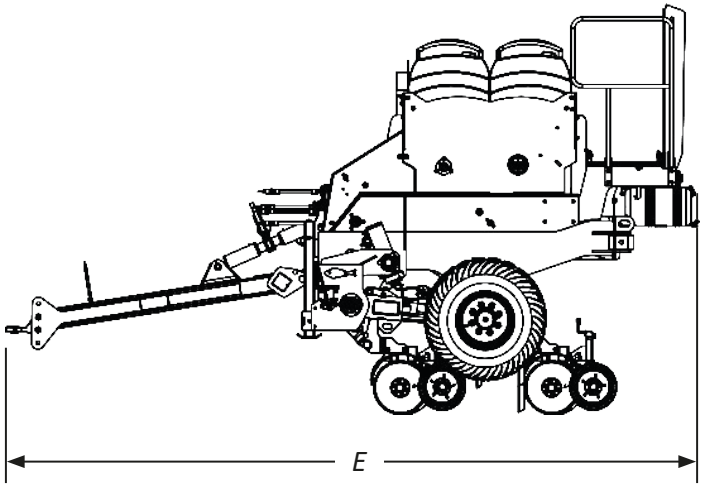

Model	Nr of Rows	Measure A (mm)	Measure B (mm)	Measure C (mm)	Measure D (mm)	Measure E (mm)
SKADI 5000	25	3096	2841	5670	2900	4570
SKADI 6000	29	3096	2841	6350	2900	4570
SKADI 7000	33	3096	2841	7447	2900	4570

Dimensions

- SKADI - With front line marker / With side transport

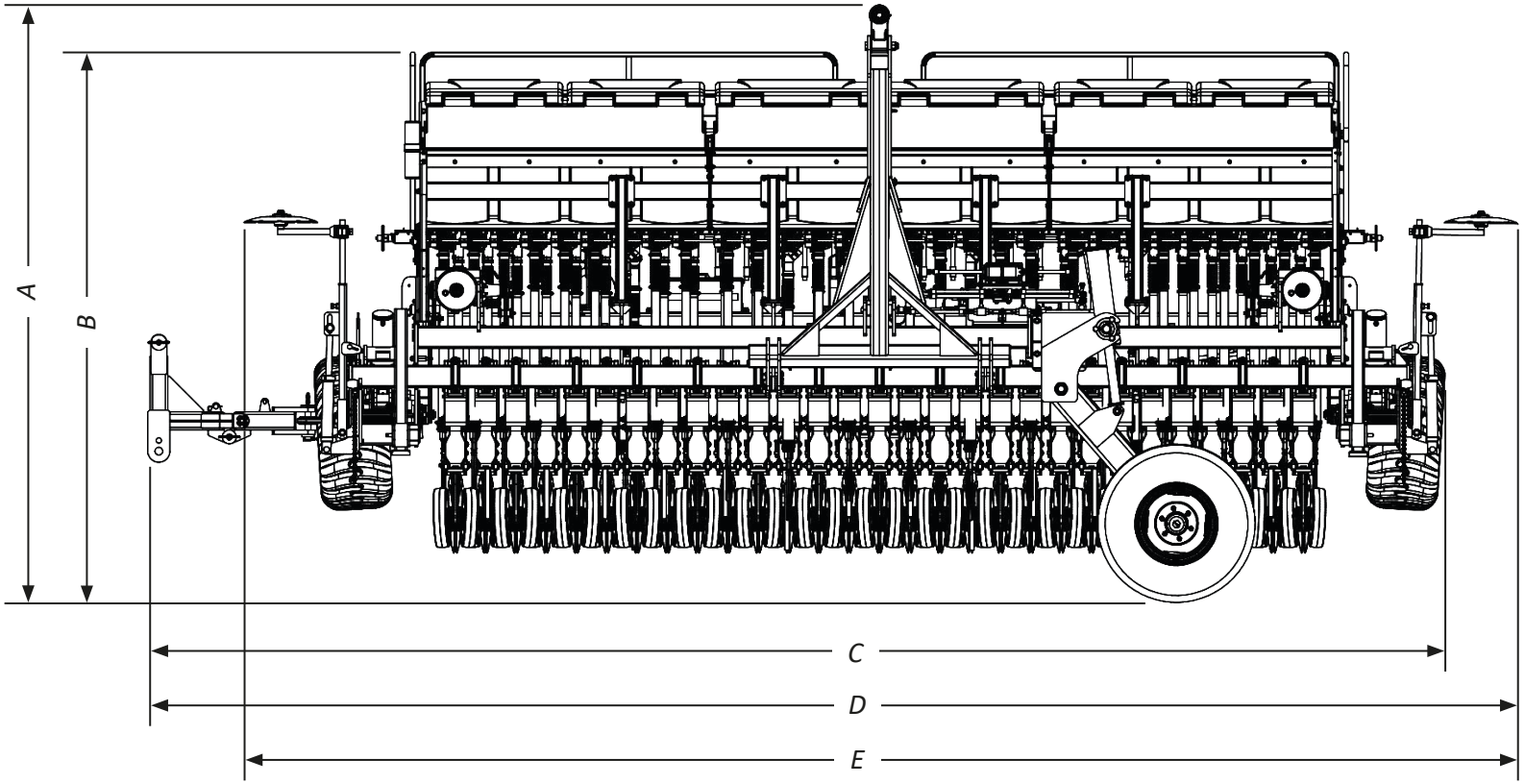

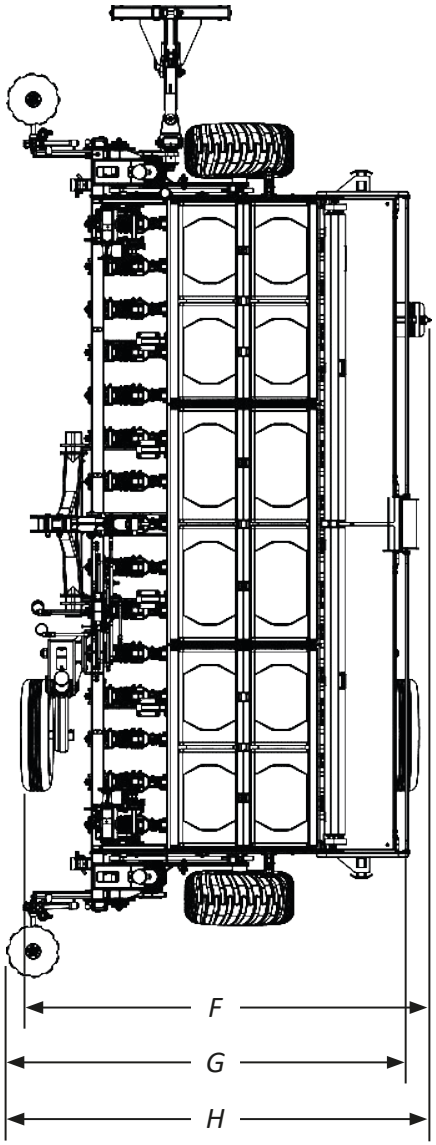

Model	Nr of Rows	Measure A (mm)	Measure B (mm)	Measure C (mm)	Measure D (mm)	Measure E (mm)	Measure F (mm)	Measure G (mm)	Measure H (mm)
SKADI 5000	25	3430	3170	6665	7075	6550	3150	3015	3160
SKADI 6000	29	3430	3170	7315	7730	7205	3150	3015	3160
SKADI 7000	33	3560	3295	8375	8570	7830	3515	3015	3160

▪ Specifications

• SKADI - Baldan Pantographic Winter Seeder

Model	Nr of Rows	Useful Width (mm)	Working Width (mm)	Total Height (mm)	Deposit Capacity (L)			Estimate Weight (Kg)		Approximate Power (Hp)
					Fertilizer	Seed	Fine Seed	Without Marker Without Fine Seed Without Side Transport	With Marker With Fine Seed With Side Transport	
SKADI 5000	25	4080	4250	2841	1470	1470	104	5570	6400	125 - 150
SKADI 6000	29	4760	4930	2841	1680	1680	118	5875	6760	145 - 180
SKADI 7000	33	5440	5610	2841	1860	1860	136	6930	7870	165 - 200

Line spacing ..... 170 mm
Traction tires - SKADI 5000 / 6000 ..... 400 x 60 x 15.5 - 14 Lonas
Traction tires - SKADI 7000 ..... 600 x 50 x 22.5 TL
Side transport tires - SKADI 5000 / 6000 ..... 900 x 16 - 10 Lonas
Side transport tires - SKADI 7000 ..... 400 x 60 x 15.5 - 14 Lonas

Baldan reserves the right to change and or improve the technical characteristics of its products, without prior notice, and without obligation to do so with previously products manufactured. Technical specifications are estimates and reported under normal working conditions.

INTENDED USE OF SKADI

SKADI was developed for works in planting with winter crops such as: wheat, oats, barley, rice, and others.
SKADI must only be driven and operated by a properly instructed operator.

PROHIBITED USE OF SKADI

To avoid damage, serious accident or death, DO NOT transport people on any part of **SKADI.**
It is NOT permitted to use **SKADI** to attach, tow, or push other implements or accessories.
SKADI should NOT be used by an inexperienced operator who does not know all the driving, command and operation techniques.

Assembly

SKADI leaves the factory semi-assembled, lacking the assembly of some components that must be assembled according to the instructions below.

⚠ **SKADI** must be assembled by resale, through trained and qualified people for this job.

⚠ Before starting the **SKADI** assembly, look for an ideal location, where it will be easier to identify the parts and assemble them.

⚠ Do not wear loose clothing, as they may get caught in **SKADI**.

⚠ Use PPE (Safety Equipment).

• Assembling the coupling head

To assemble the coupling head (1), proceed as follows:

01 - Attach the coupling head (1) to the upright (2), locking through the pins (3) and locks (4).

02 - Then, attach the regulator (5) to the upright (2) and to the coupling head (1) fixing through the pins (6) and locks (7).

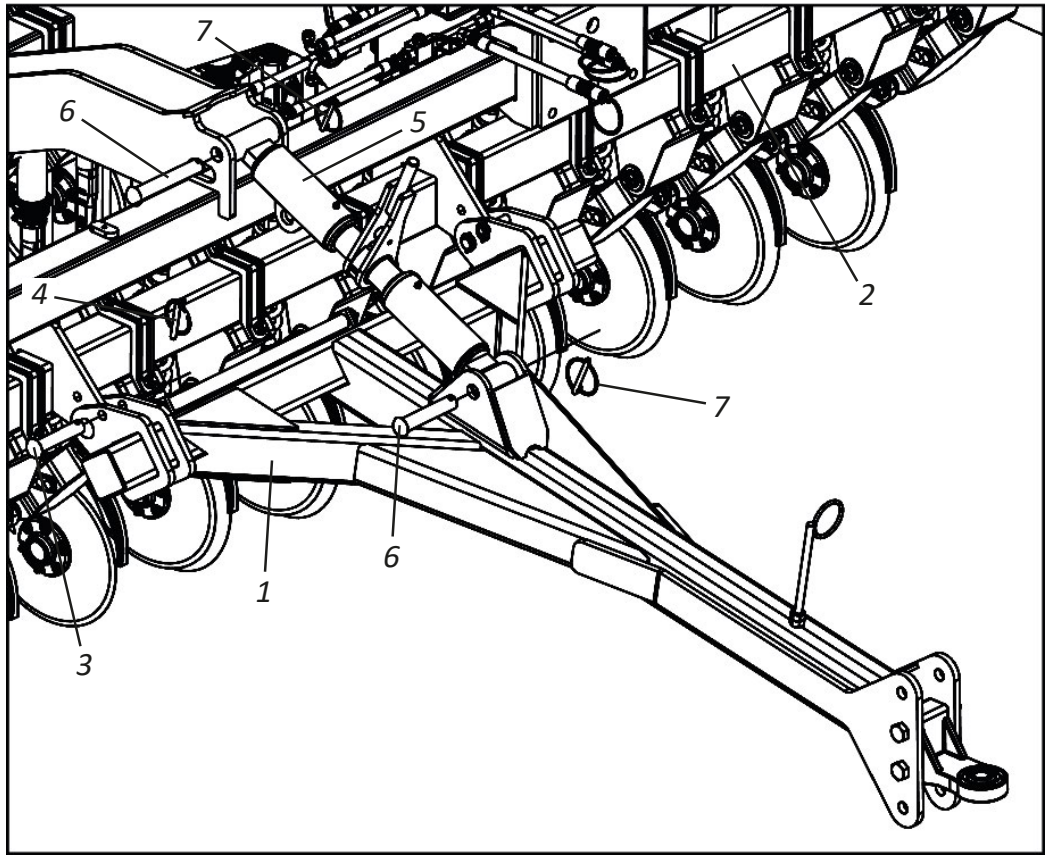

Assembly

• Assembling the fine seed box (Optional) - Part I

To assemble the fine seed box (optional), proceed as follows:

01 - Place the chain (1) on the gear (2).

02 - Then fix the plates (3) in the fine seed box (4) using the screws (5), flat washers (6) and nuts (7).

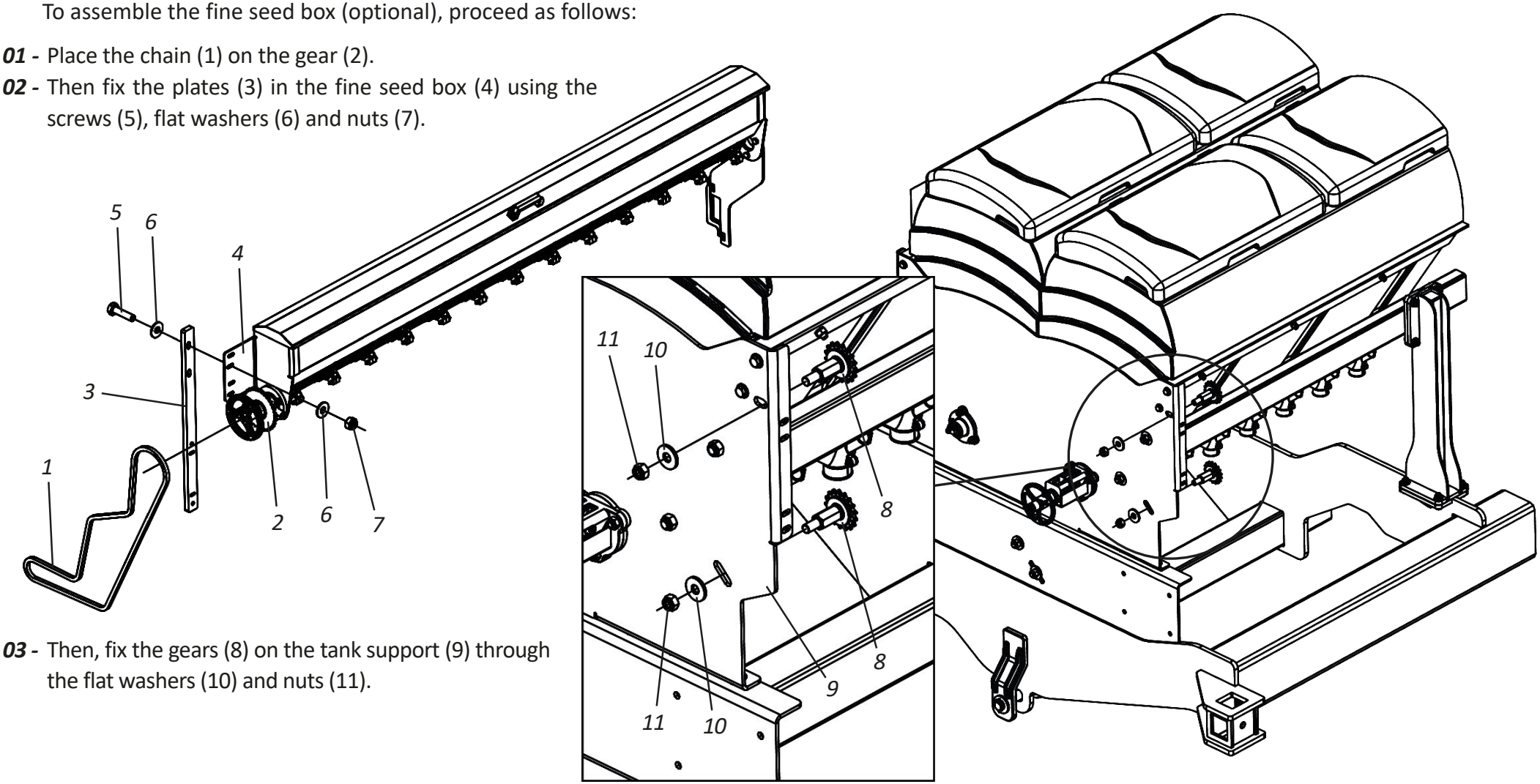

03 - Then, fix the gears (8) on the tank support (9) through the flat washers (10) and nuts (11).

Assembly

• Assembling the fine seed box (Optional) - Part II

04 - Then, attach the fine seed box (4) and the chain cover (12) to the tank support (9) fixing through the screws (13), flat washers (14), and nuts (15).

05 - Then, pass the chain (1) between the tensioners (8) fixed on the tank support (9).

06 - Finish by coupling the hoses (16) in the fine seed box (4).

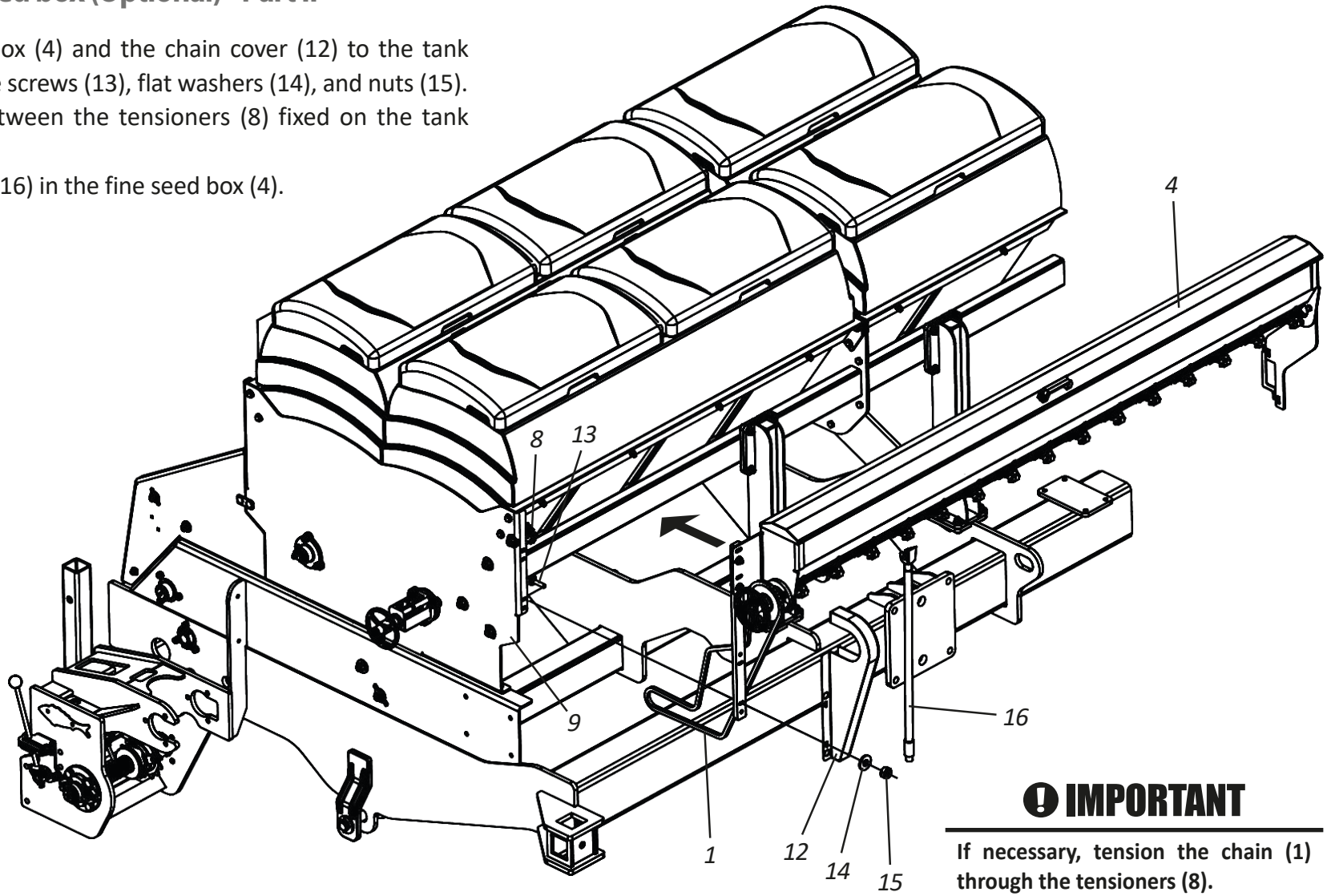

⚠ ATTENTION

When finishing the assembling the fine seed box (4), check that there are no objects (nuts, screws, or others) inside them.

! IMPORTANT

If necessary, tension the chain (1) through the tensioners (8).

Assembly

- Assembling the hydraulic system without front line marker - SKADI 5000

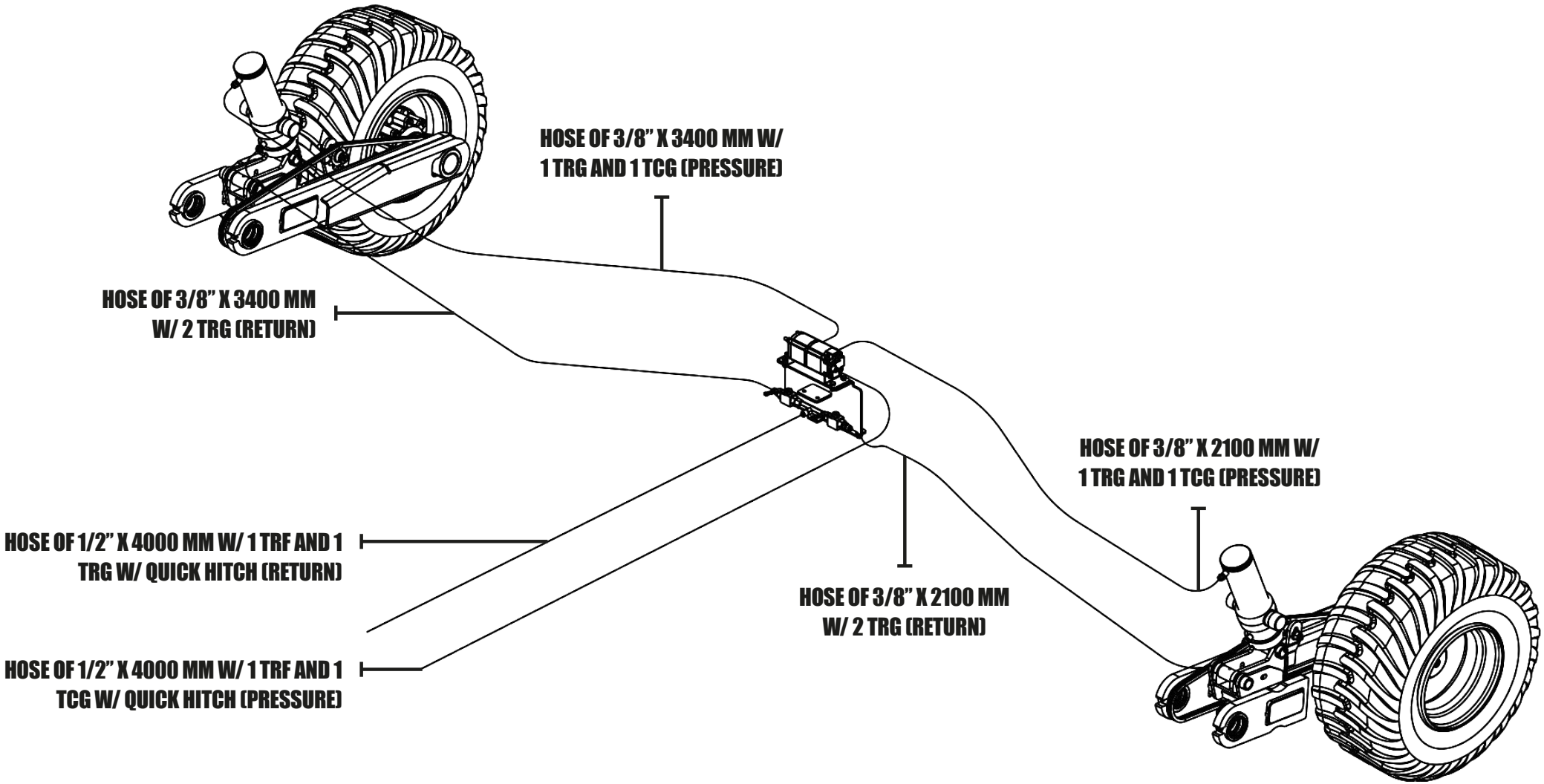

Assembly

- Assembling the hydraulic system without front line marker - SKADI 6000

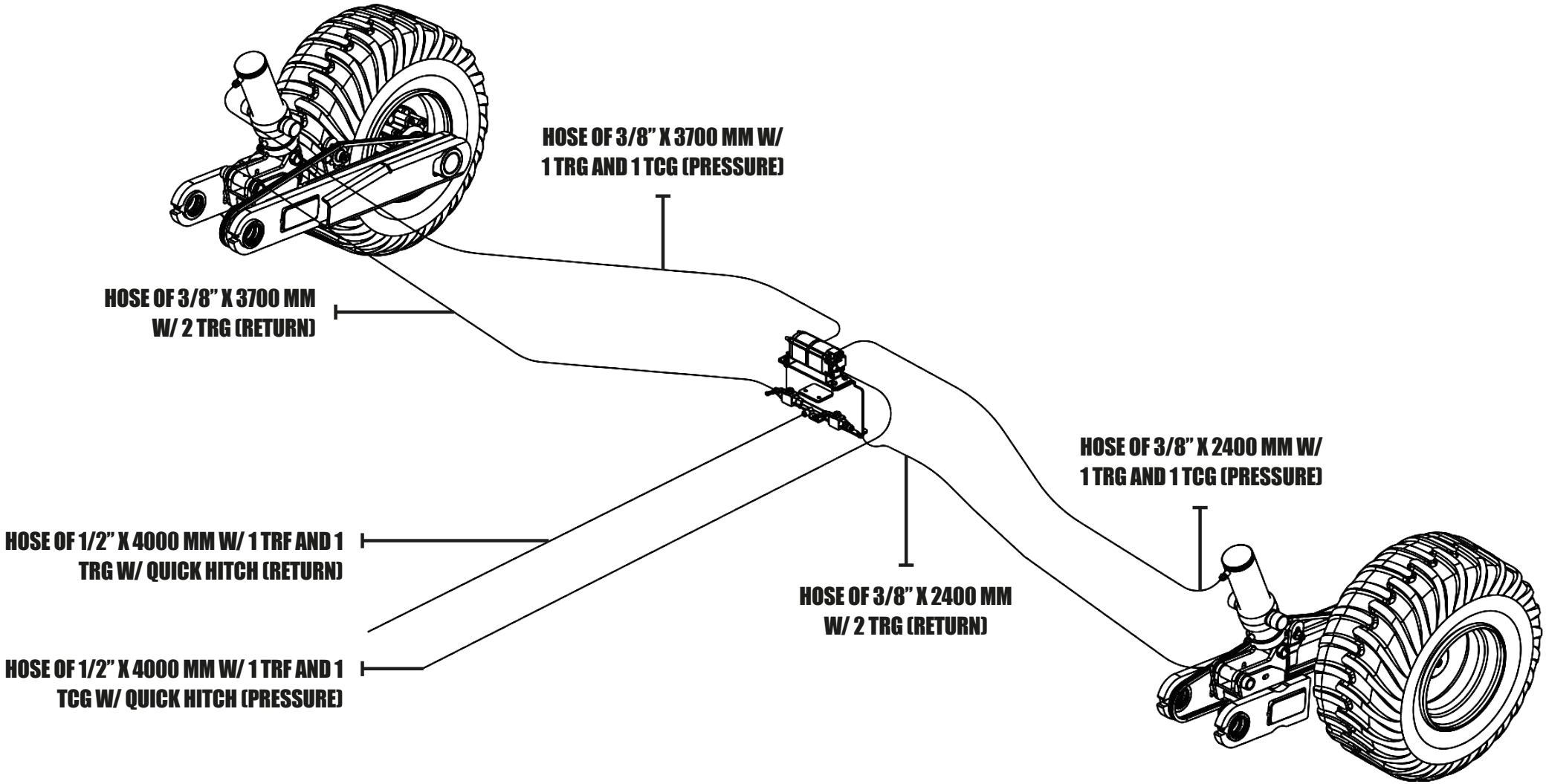

▪ Assembly

- Assembling the hydraulic system without front line marker - SKADI 7000

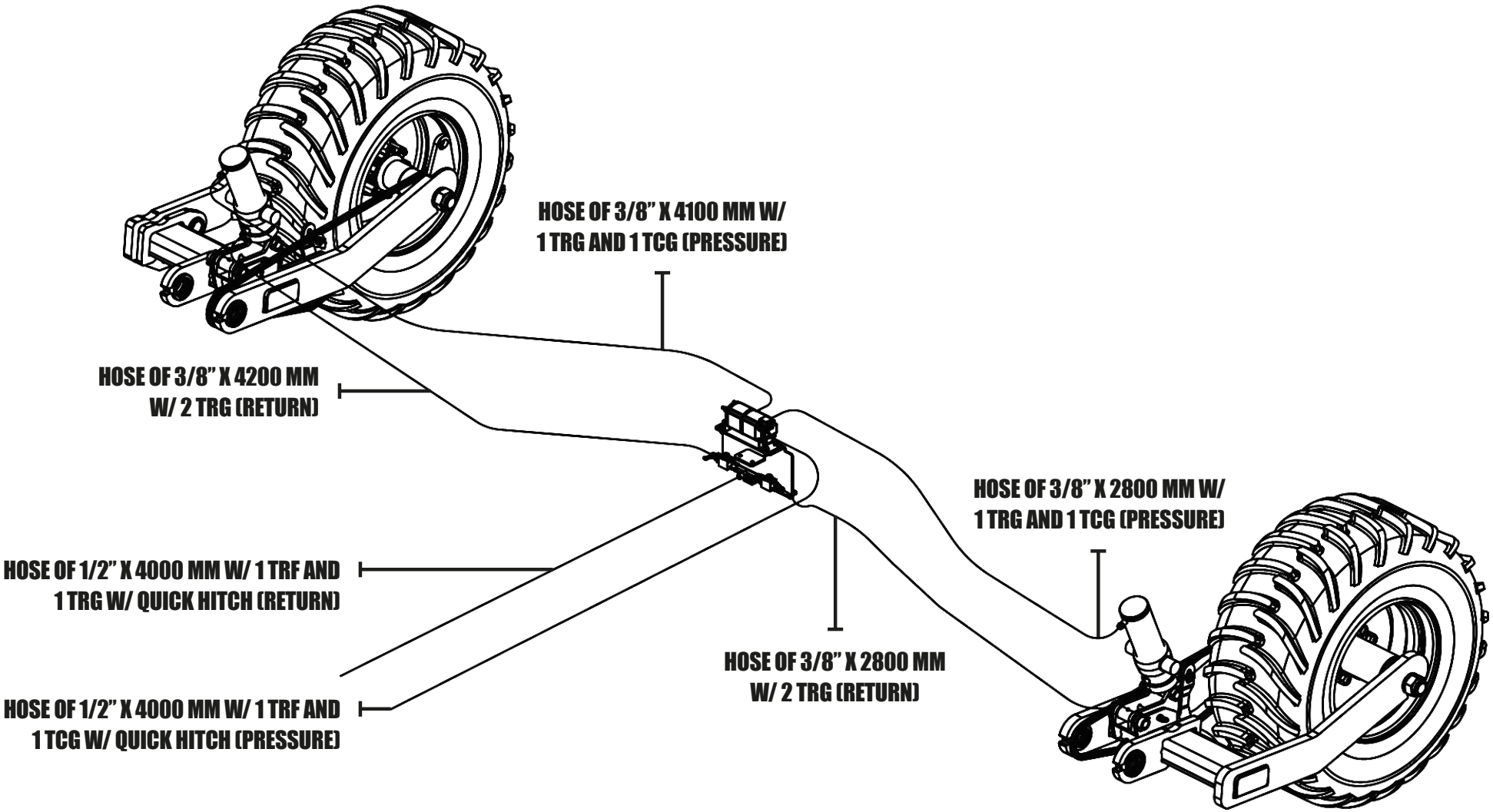

Assembly

• Front line marker assembly (Optional)

To assemble the front line marker (optional), proceed as follows:

01 - Fix the support (1) on the upright (2) using the screws (3) and nuts (4).
02 - Then, fix the beacon (5) on the support (1) through the bushings (6), screws (7), and nuts (8).
03 - Then, insert the bar (9) into the goal (5) fixing it with the screw (10).
04 - Fix the base of the hydraulic cylinder (11) on the support (1), through the pin (12), flat washer (13), cotter pin (14) and the rod on the goal (5) with the pin (15), flat washers (16) and locks (17).
05 - Finalize, fixing the chain (18) through the pressure washer (19) and screw (20).

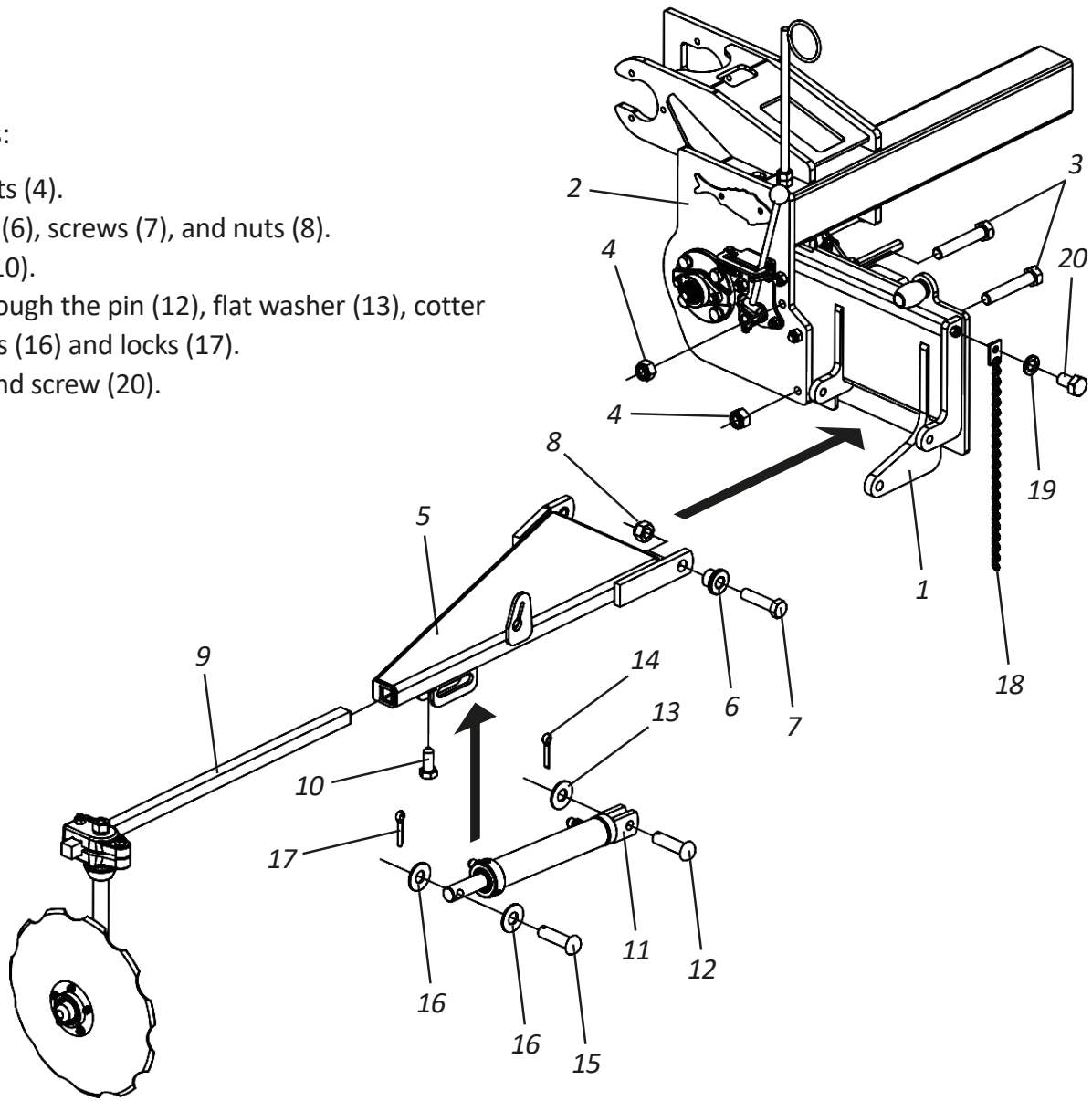

⚠ ATTENTION

When finished assembling the right front line marker, repeat this procedure for the assembling the left front line marker.
After assembling the front line markers, assemble the hydraulic system according to the instructions on pages 28 to 30.

▪ Assembly

- Assembling the hydraulic system with front line marker (Optional) - SKADI 5000

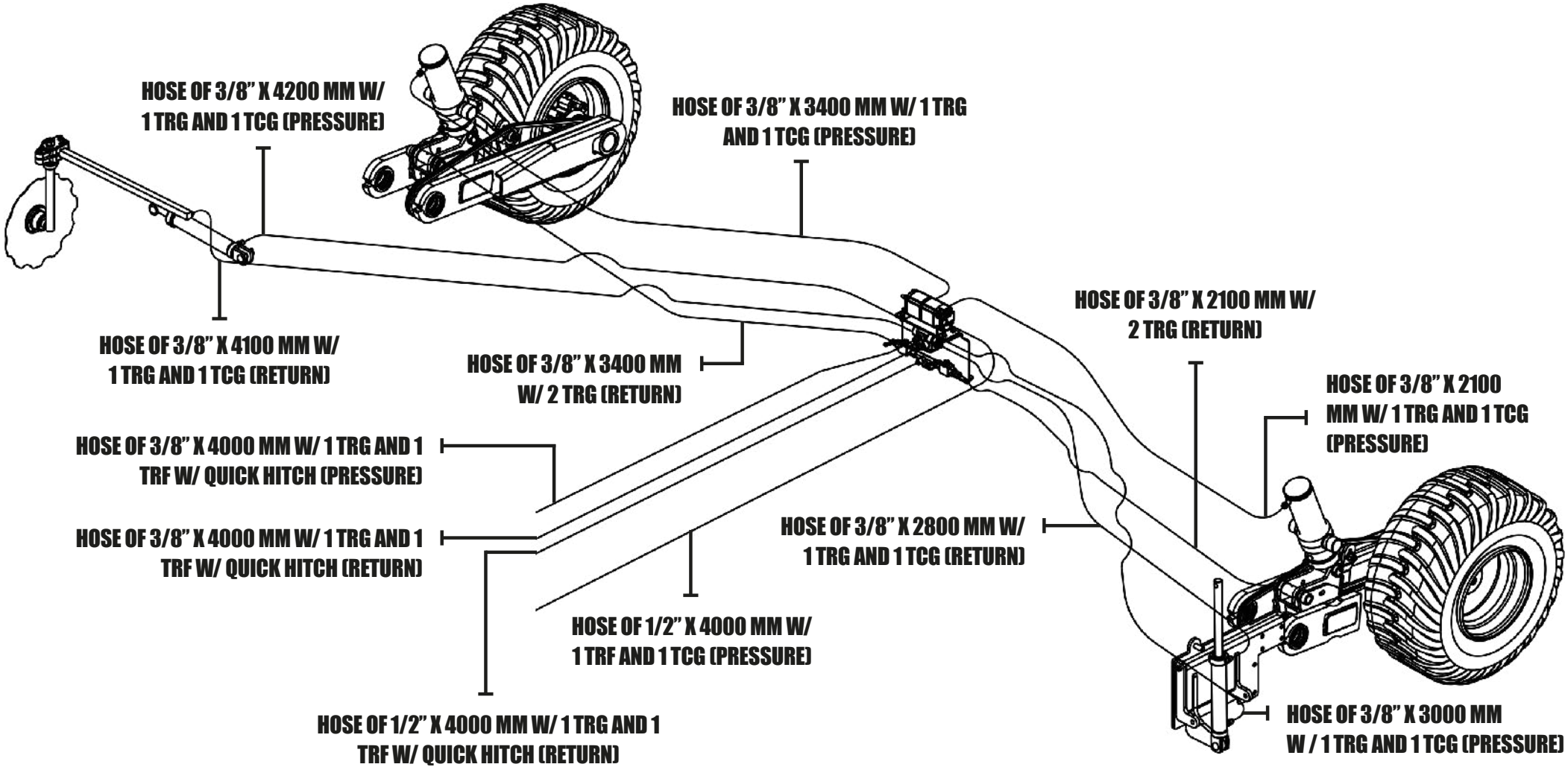

Assembly

- Assembling the hydraulic system with front line marker (Optional) - SKADI 6000

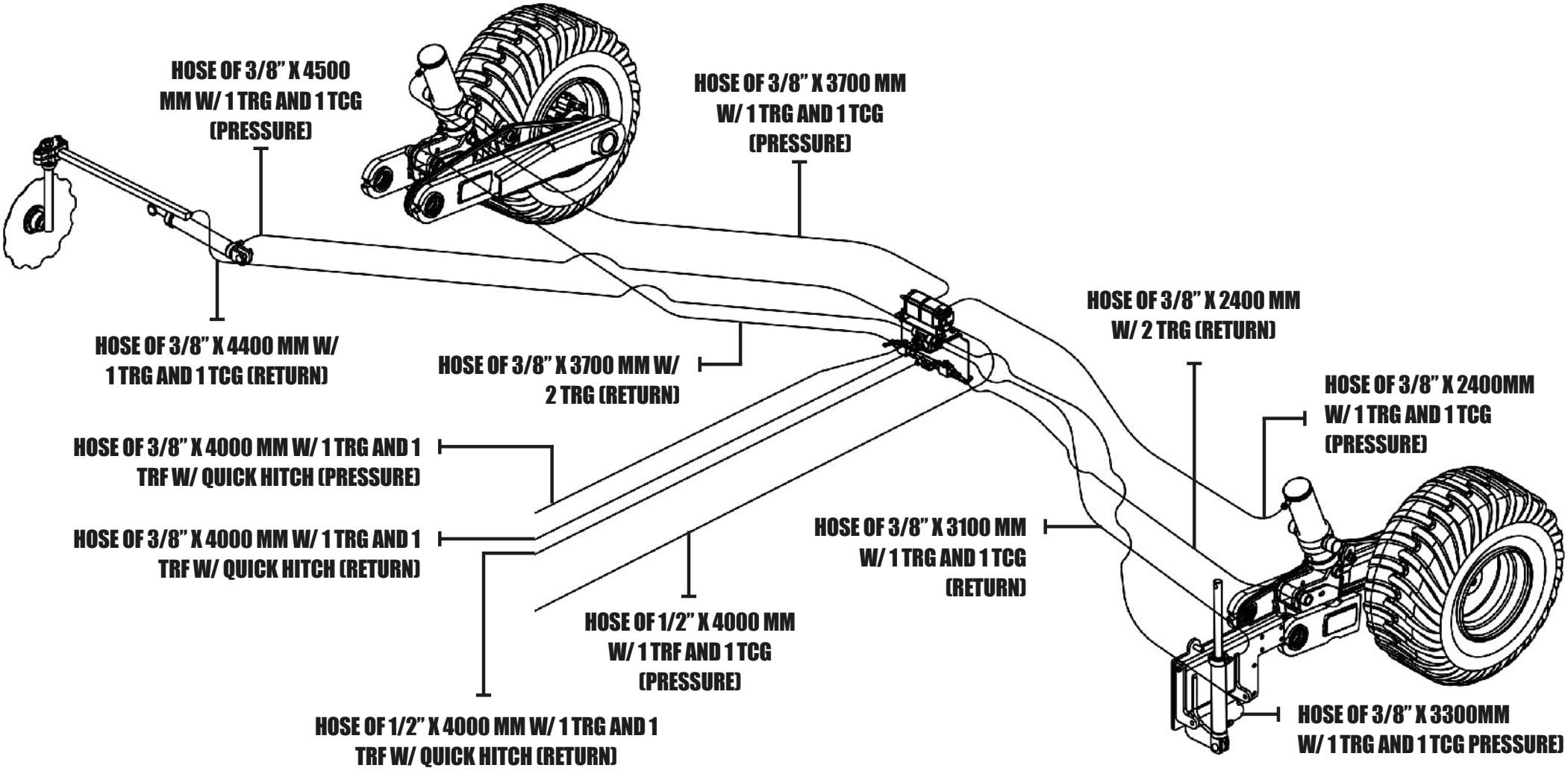

Assembly

- Assembling the hydraulic system with front line marker (Optional) - SKADI 7000

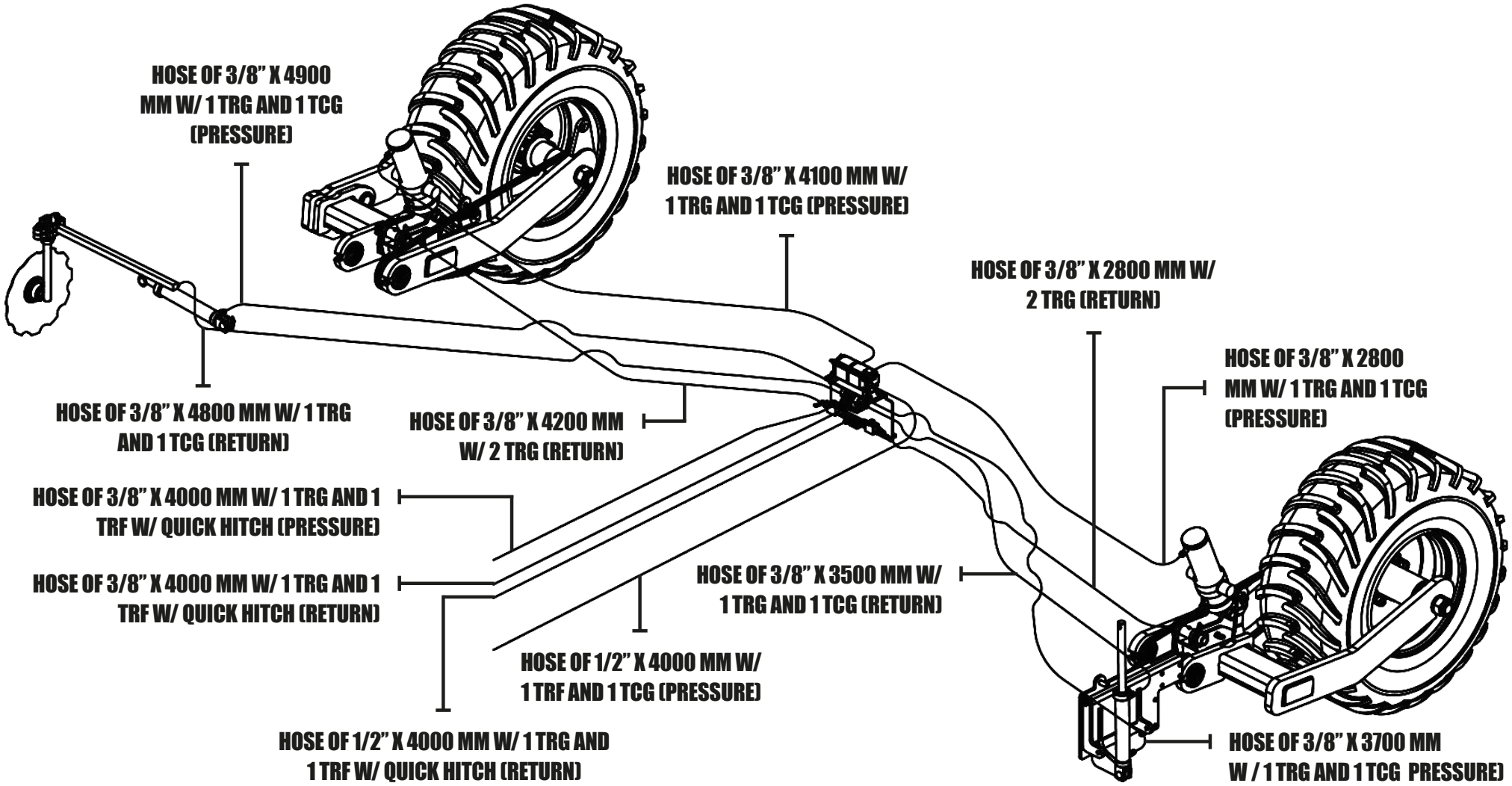

Assembly

• Assembling the side transport (Optional) - Part I

To mount the side transport (optional), proceed as follows:

01 - Fix the shackle (1) on the wheel support (2) through the flat washer (3), nut (4), and cotter pin (5).

02 - Then, attach the transport head (6) to the shackle (1) through the pin (7), flat washer (8) and lock (9).

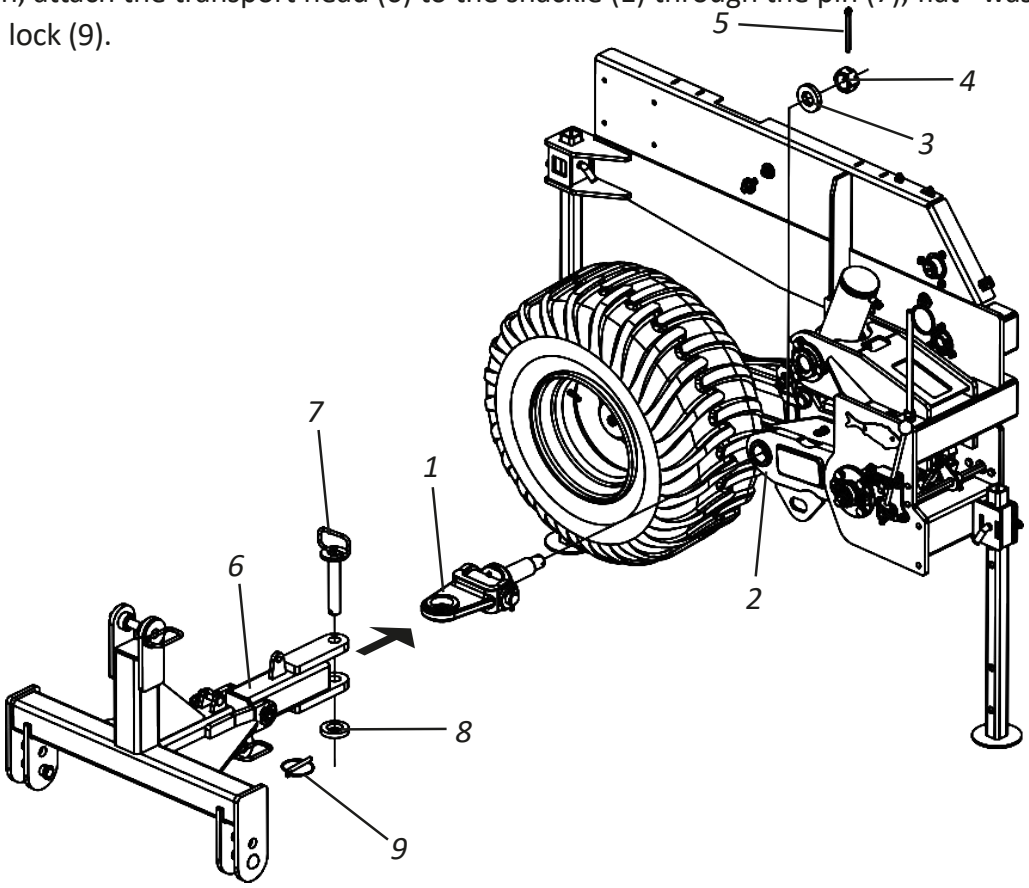

03 - Then, fix the wheel supports (10) to the transport supports (11) through the pins (12) and nuts (13).

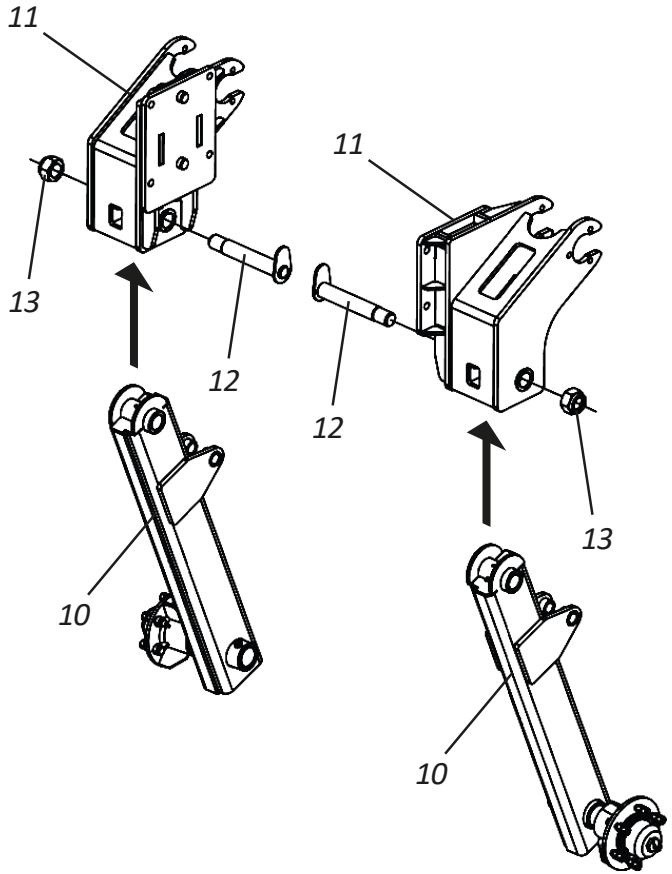

Assembly

• Assembling the side transport (Optional) - Part II

04 - Then, attach the transport supports (11) to the upright (14) using the screws (15) and nuts (16).

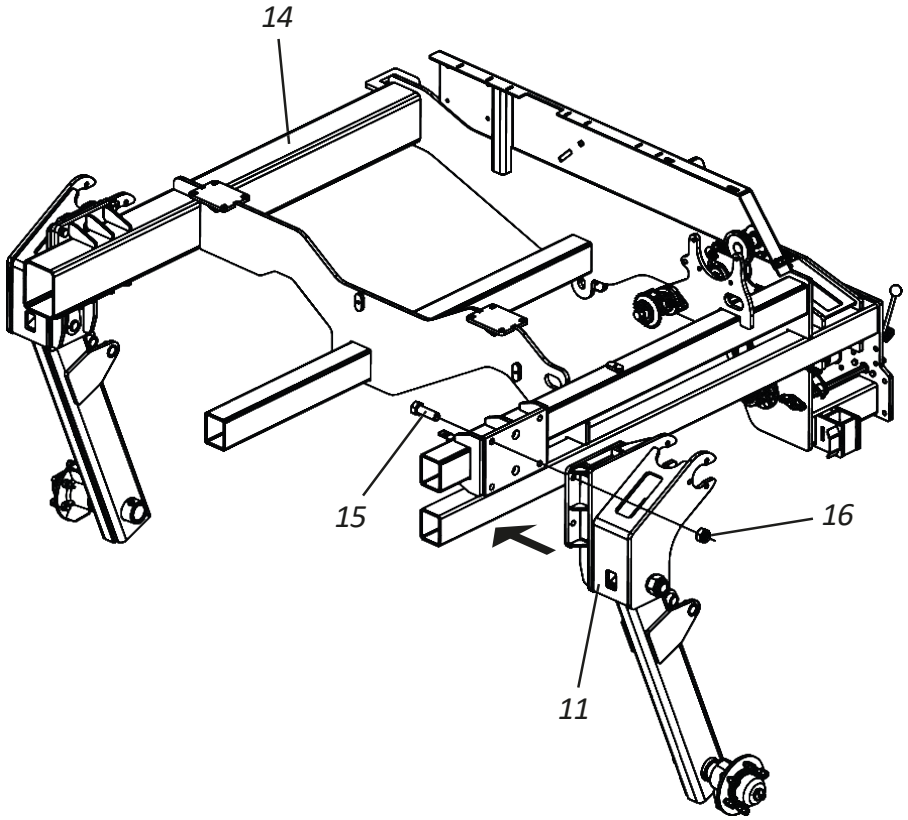

05 - Then, attach the hydraulic cylinders (17) to the transport support (11) through the bearings (18), bushings (19), screws (20), nuts (21), and the rods in the wheel supports (10) through pins (22) and nuts (23).

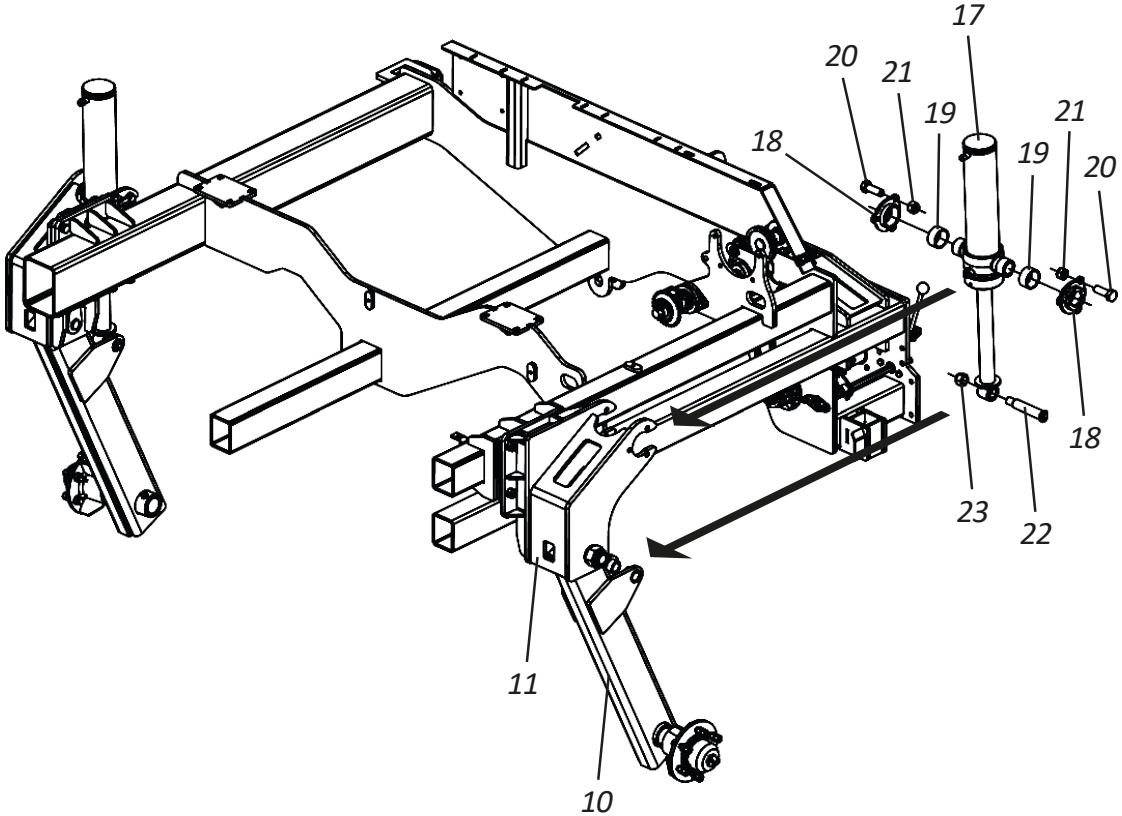

Assembly

• Assembling the side transport (Optional) - Part III

06 - Then, attach the tires (24) to the wheel supports (10) using the screws (25) and nuts and locknuts (26).

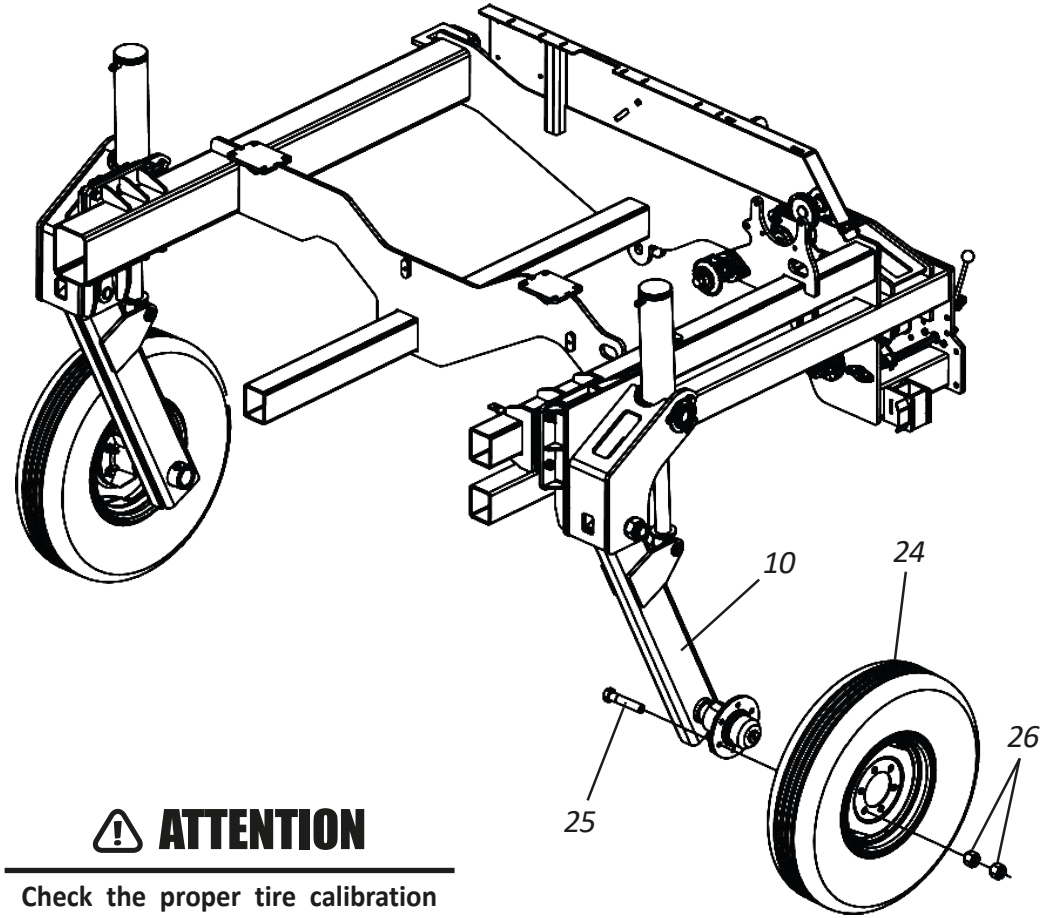

⚠ ATTENTION

Check the proper tire calibration on page 78.

07 - Then, release the regulator (27) by removing the lock (28) and the pin (29).

08 - Then, unlock the coupling head (30) by removing the locks (31) and pins(32).

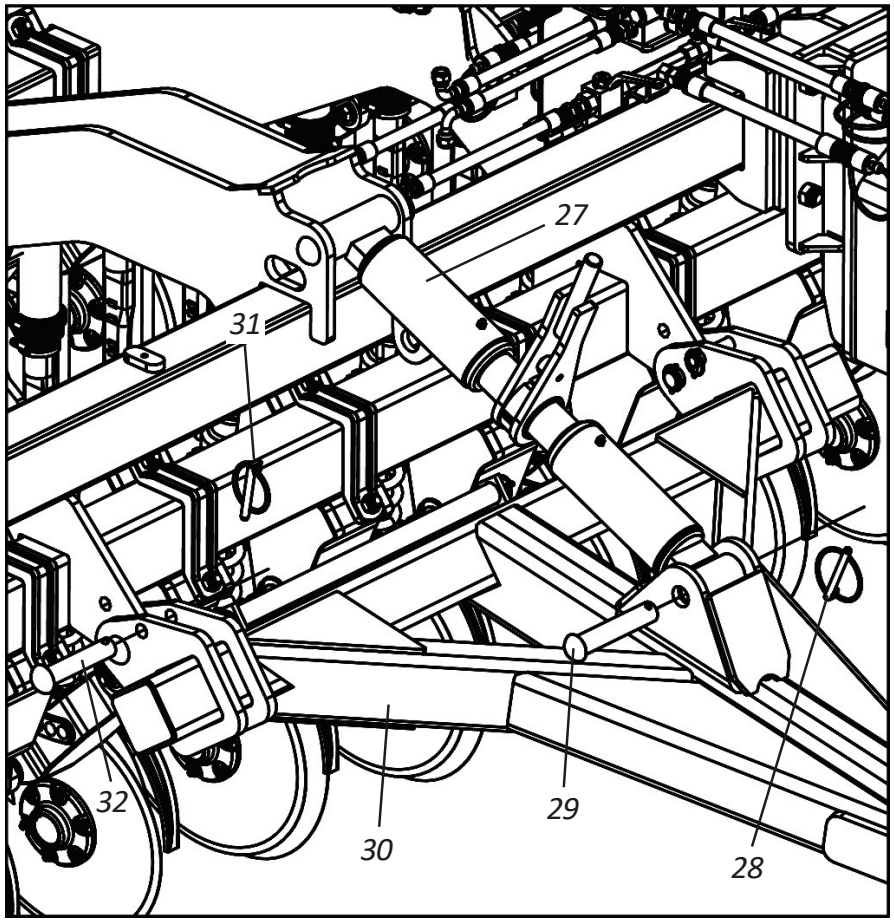

Assembly

• Assembling the side transport (Optional) - Part IV

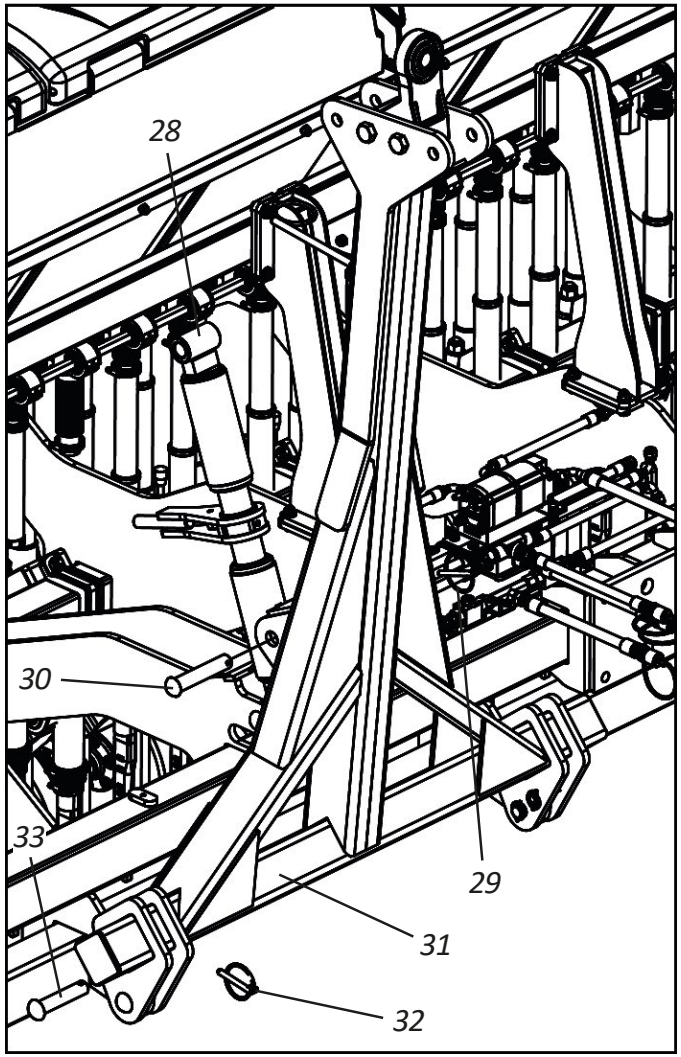

09 - Then, lift the coupling head (31) and lock it through the pins (33) and locks (32).

10 - Then, lock the regulator (28) through the pin (30) and lock (29).

⚠ ATTENTION **Finish the assembling the side transport (optional) by assembling the hydraulic system according to the instructions on the following page.**

Assembly

- Assembling the hydraulic system of the side transport (Optional) - SKADI 5000/6000/7000

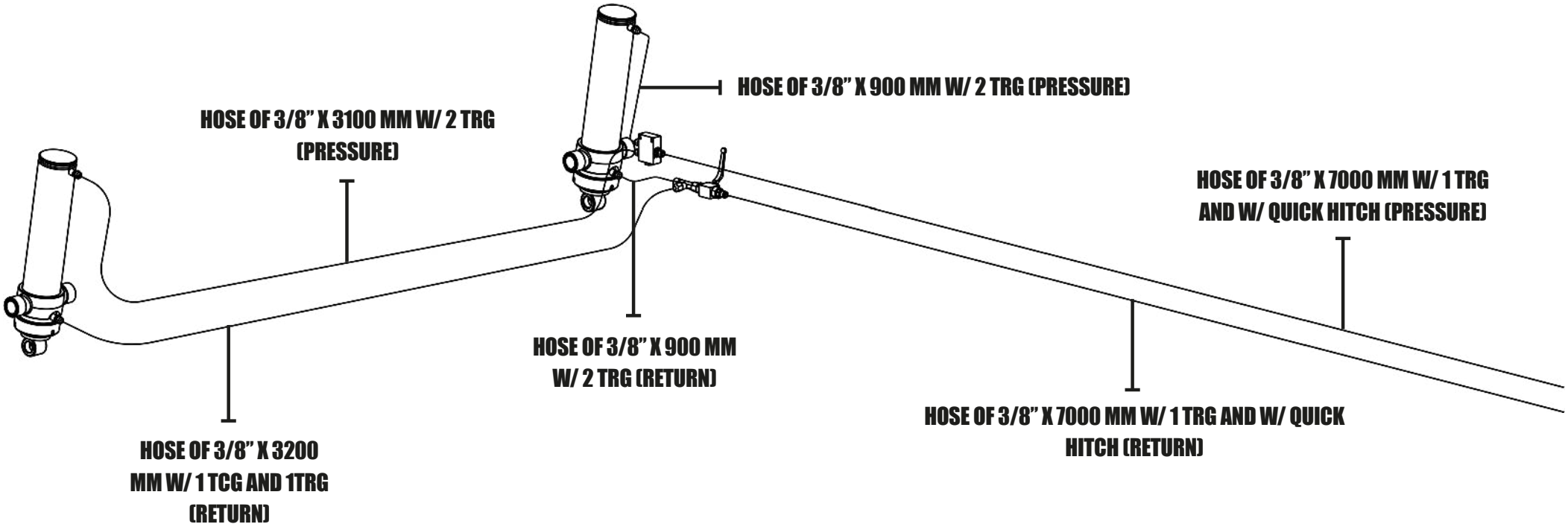

▪ Hitch

• Tractor hitch

Before coupling **SKADI** to the tractor, check that the tractor is equipped with a set of weights or ballast on the front or on the front wheels so as not to lift the tractor. The rear wheels will give the tractor greater stability and traction on the ground.

To couple **SKADI**, proceed as follows:

01 - Level the coupling head (1) of the seeder in relation to the tractor coupling through the adjustments (2) of the coupling shackle. Then, slowly approach the seeder to the tractor in reverse, paying attention to the application of the brakes.

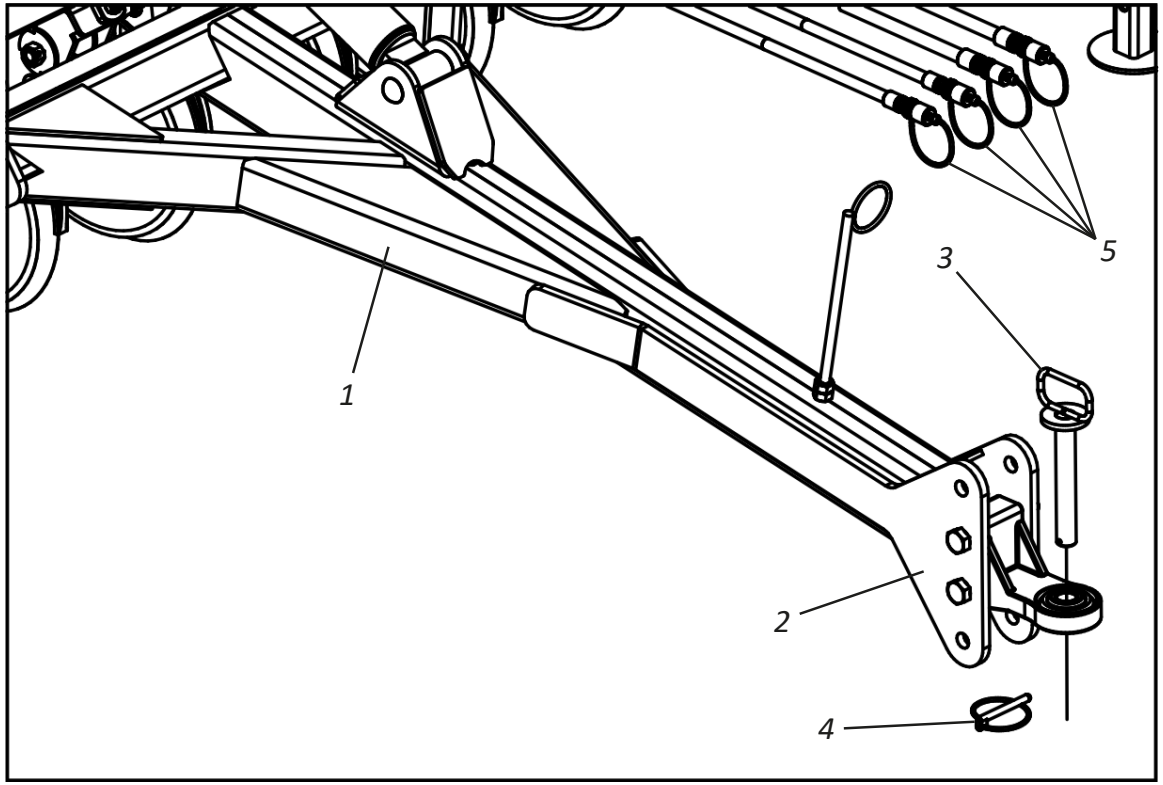

02 - Proceed the coupling of the seeder to the tractor, fixing it through the coupling pin (3) and lock (4).

03 - Finally attach the hoses (5) to the tractor's quick coupling.

⚠ ATTENTION

Before connecting or disconnecting the hydraulic hoses, turn off the engine and relieve pressure from the hydraulic system by fully operating the control levers. When relieving system pressure, make sure that no one is close to the equipment's movement area.

NOTE

When engaging the seeder, look for a safe and easily accessible place, always use reduced gear with low acceleration.

▪ Leveling

• Seeder leveling

At the end of the **SKADI** coupling, level it out, to do this, proceed as follows:

01 - Place the tractor and the seeder in a flat place.
02 - Then, release the locks (1) and remove the tube (2) from the coupling head (3).
03 - Then, raise the lines by activating the hydraulic cylinders (4).
04 - Then connect the tube (2) to the regulator (5) and level the seeder.
05 - At the end of the adjustment, lower the seeder and replace the pipe (2) in the coupling head (3), locking it through the locks (1).

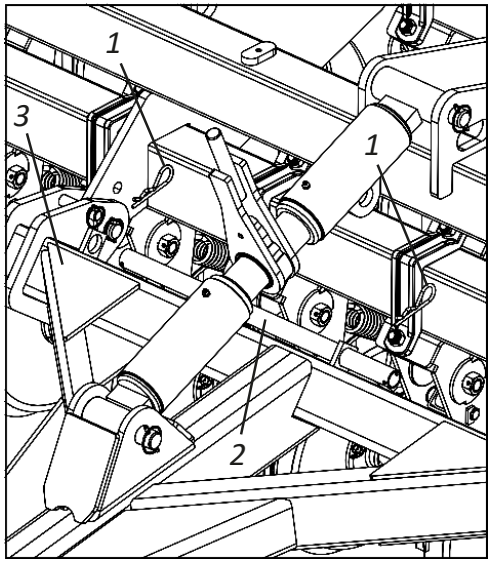

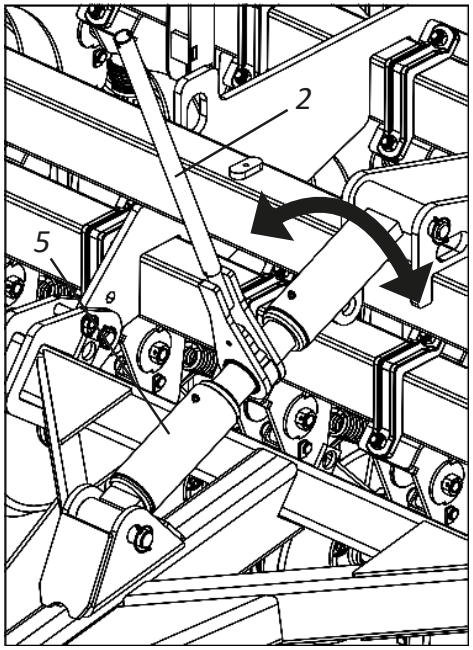

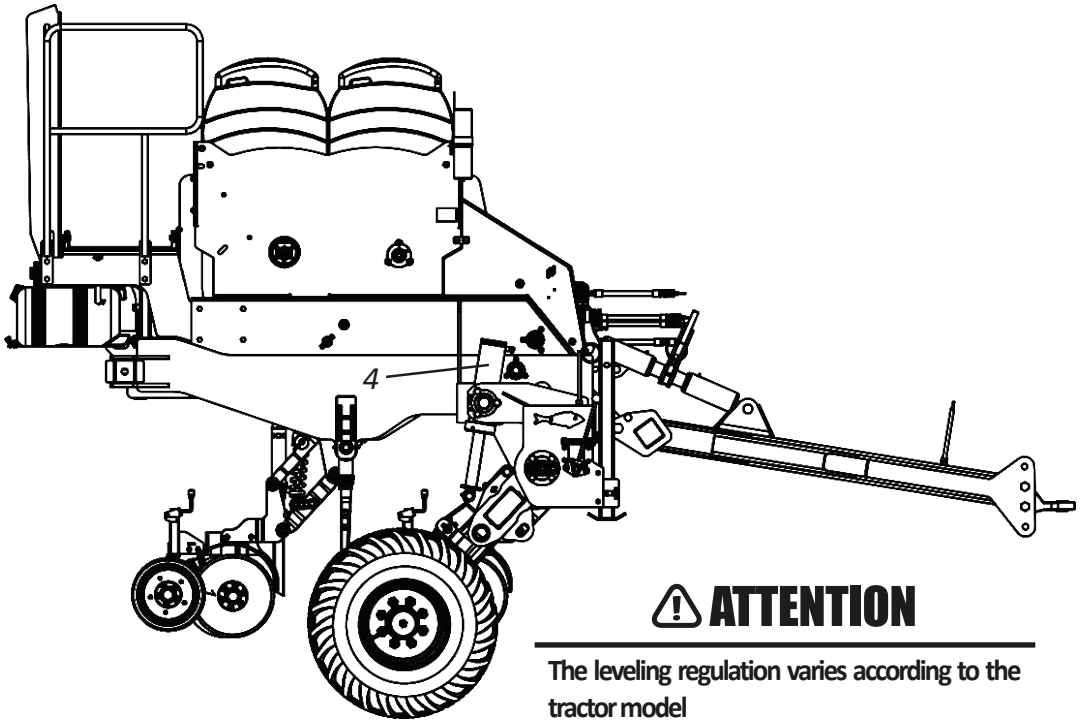

⚠ ATTENTION

The leveling regulation varies according to the tractor model

Transportation

• Transporting the SKADI without side transport system - Part I

To transport **SKADI** without a side transport system, proceed as follows:

01 - Collect the front support brackets (1) and secure them with the pins (2) and locks (3).

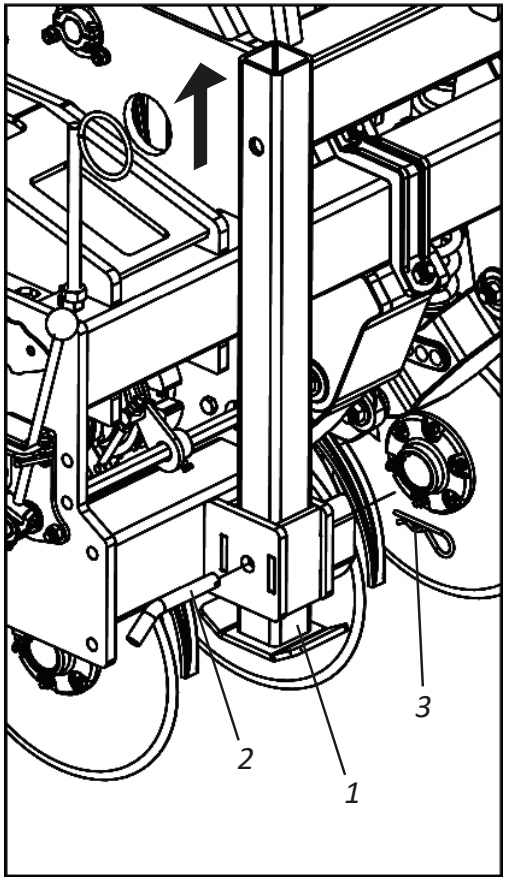

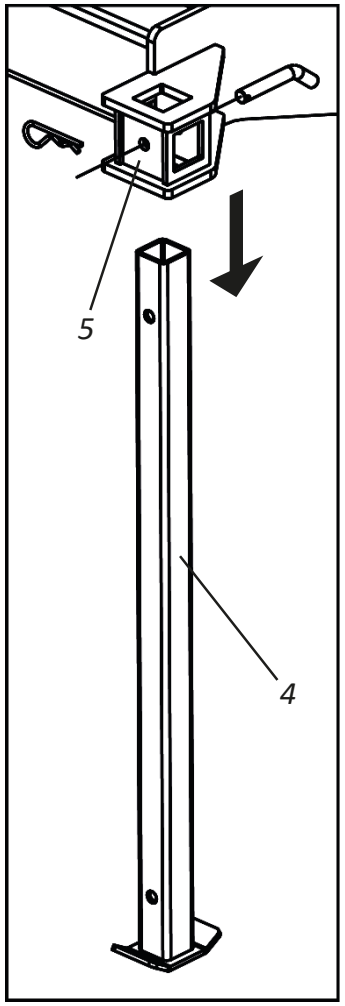

02 - Then, remove the rear support brackets (4) from the upright (5) and place them in a horizontal position, fixing them with the pins (6) and locks (7).

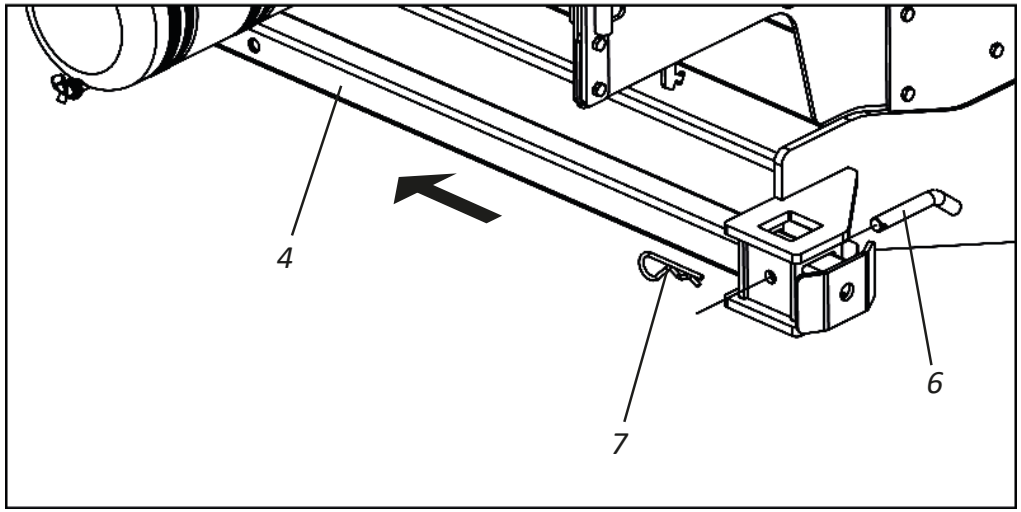

Transportation

• Transporting the SKADI without side transport system - Part II

03 - Then, raise the lines by fully activating the stroke of the hydraulic cylinders (8) and place the locks (9) on their rods, locking them with the pins (10) and locks (11).

04 - Then, check if the seeder is level in relation to the ground, if not, level it through the regulator (13) of the coupling head (14).

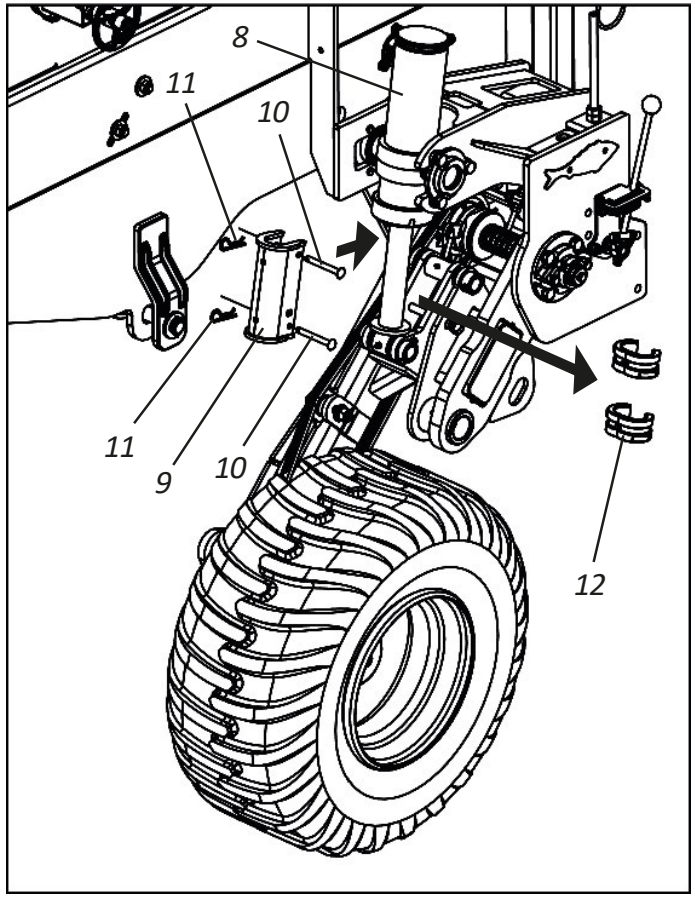

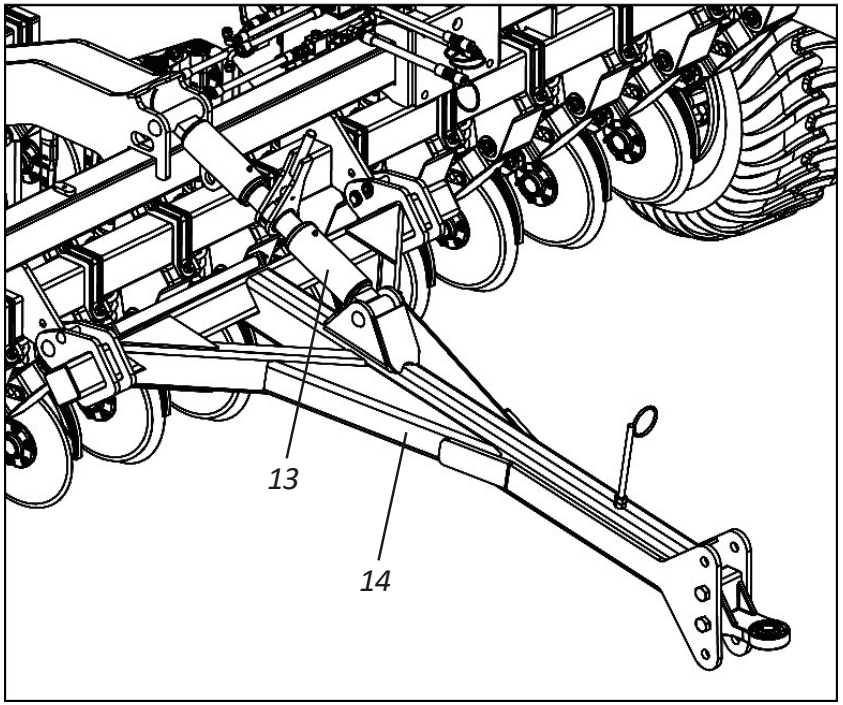

NOTE

If you have previously worked with SKADI and used the limit rings (12) on the hydraulic cylinders (8), they must be removed to place the locks (9).

Transportation

• Transporting the SKADI without side transport system - Part III

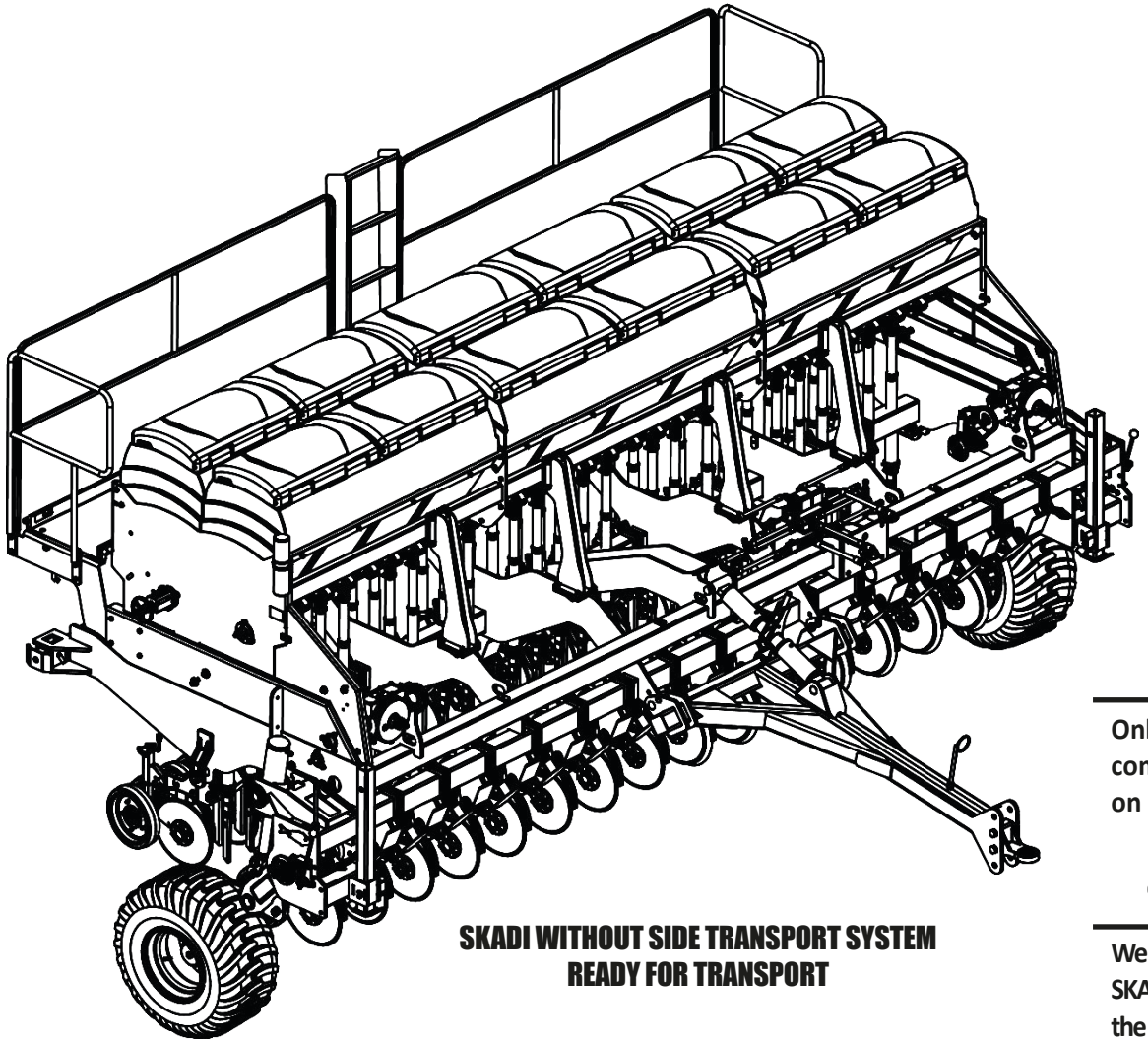

SKADI WITHOUT SIDE TRANSPORT SYSTEM
READY FOR TRANSPORT

⚠ ATTENTION

Only transport the SKADI when all procedures on pages 38 and 39 have been completed. Do not transport SKADI with the ladder open, follow the directions on page 55.

IMPORTANT

We recommend not carrying the SKADI while it is loaded. Fill it up at the workplace.

NOTE

If SKADI is going to remain in the field for any reason, we recommend covering it with waterproof tarpaulin to prevent moisture.

Transportation

• Transporting the SKADI with side transport system (Optional) - Part I

To transport **SKADI** with a side transport system (Optional), proceed as follows:

01 - Collect the front support brackets (1) and secure them with the pins (2) and locks (3).

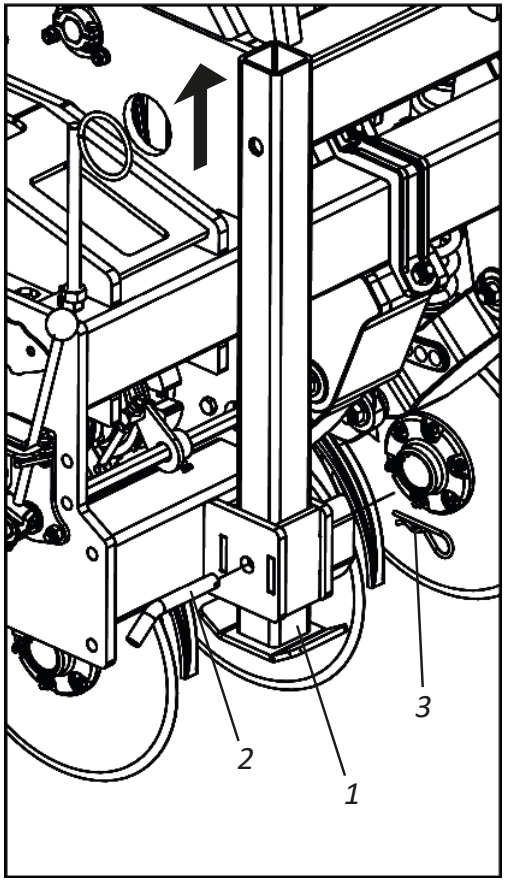

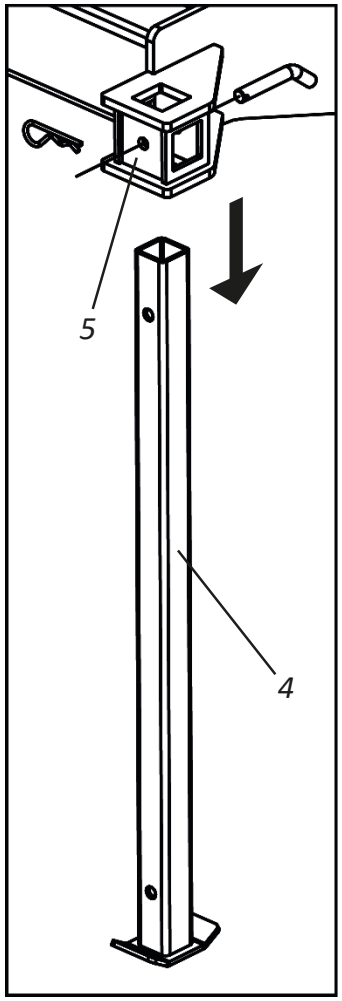

02 - Then, remove the rear support brackets (4) from the upright (5) and place them in the horizontal position, fixing them with the pins (6) and locks (7).

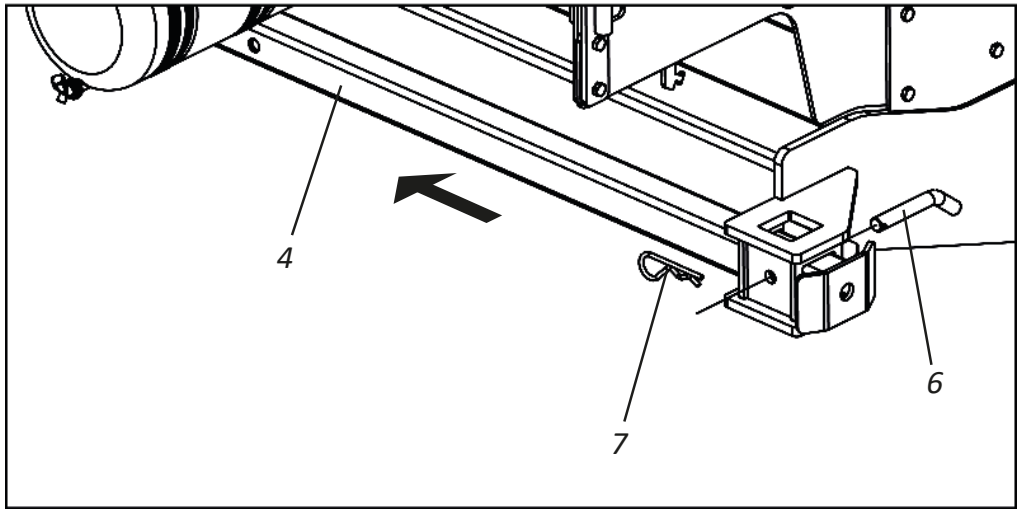

Transportation

• Transporting the SKADI with side transport system (Optional) - Part II

03 - Then, unlock the shackle (8) of the wheel support (9) by releasing the lock (10), flat washer (11), remove the pin (12), and rotate the shackle (8).
04 - Then, release the locks (13 and 14) and remove the pins (15 and 16).

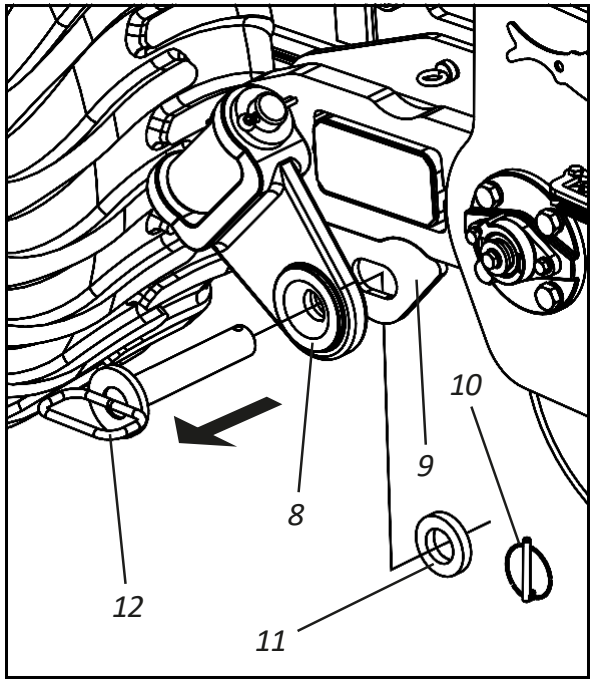

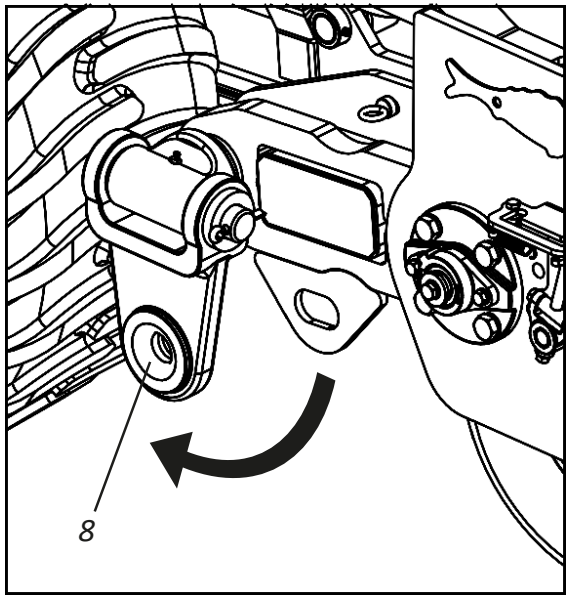

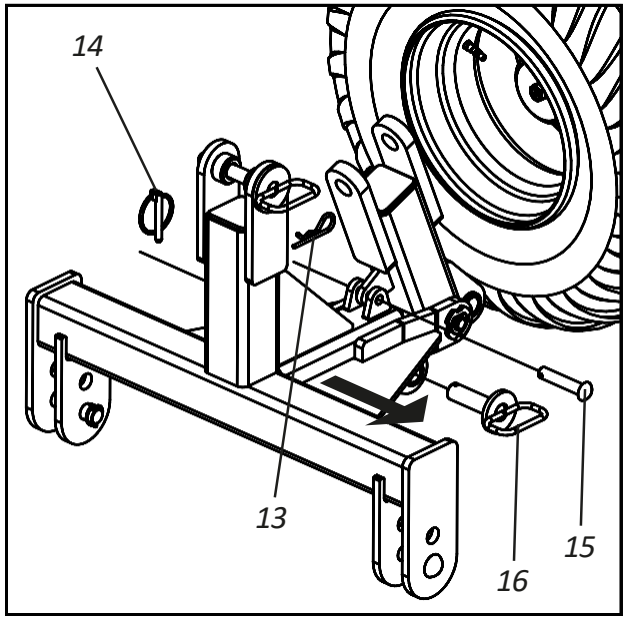

Transportation

• Transporting the SKADI with side transport system (Optional) - Part III

05 - Then, disengage the support (17) from the transport head (18) locking it through the pin (16) and lock (14).
06 - Then, replace the pin (15) and the lock (13) on the transport head (18).
07 - Then, attach the transport head (18) to the shackle (8) through the pin (12), flat washer (11) and lock (10) that fixed the shackle to the wheel support.

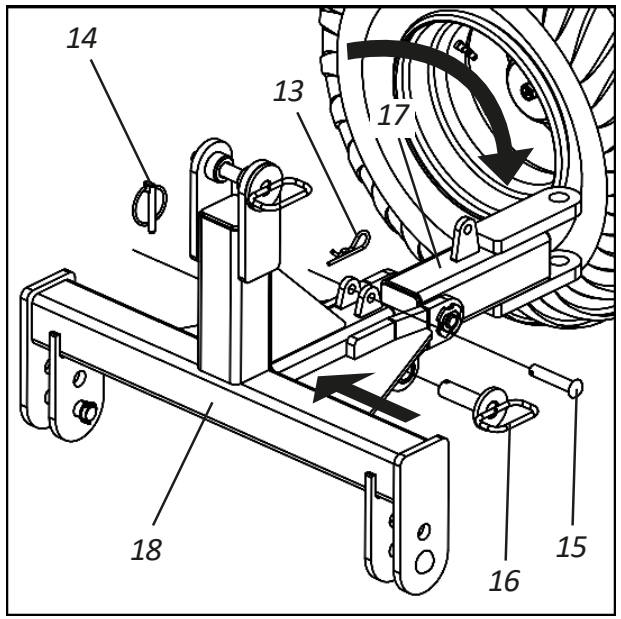

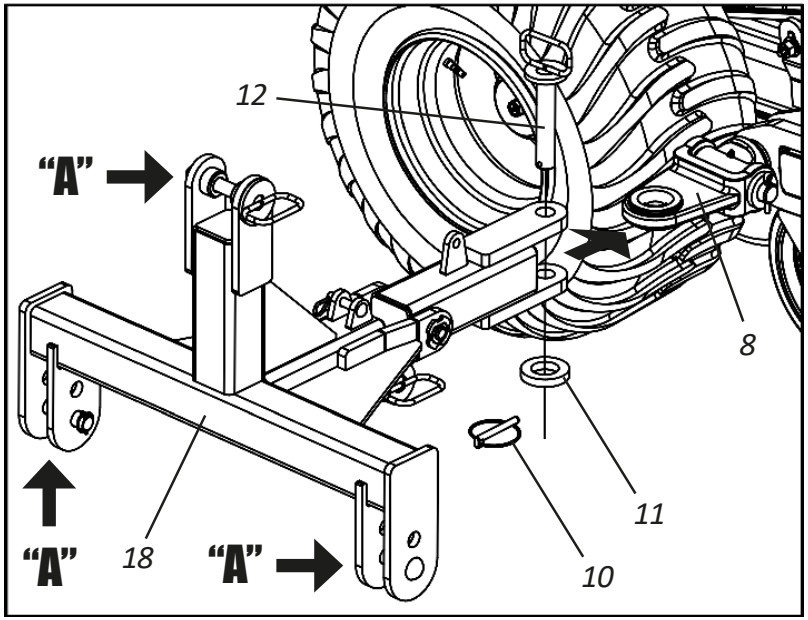

⚠ ATTENTION | **To attach the transport head (18) to the shackle (8), the tractor must be coupled to points "A" of the transport head (18).**

Transportation

• Transporting the SKADI with side transport system (Optional) - Part IV

08 - Then, unlock the regulator (19) and the coupling head (20) by removing the locks (21 and 22) and the pins (23 and 24).

09 - Then, lift the regulator (19) and the coupling head (20) and lock them through the pins (23 and 24) and the locks (21 and 22).

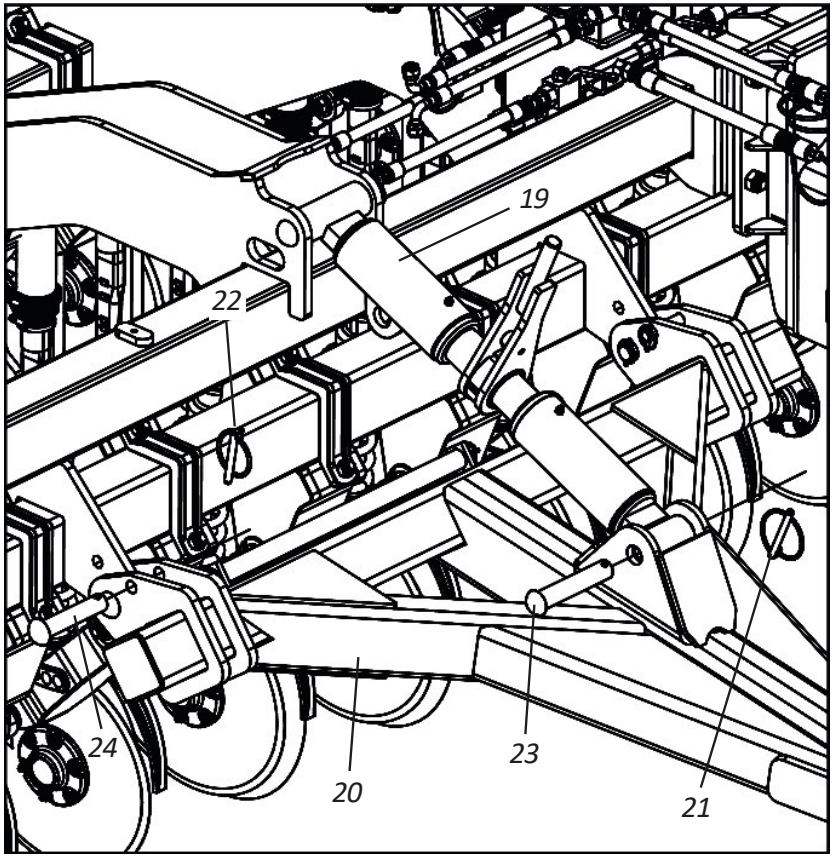

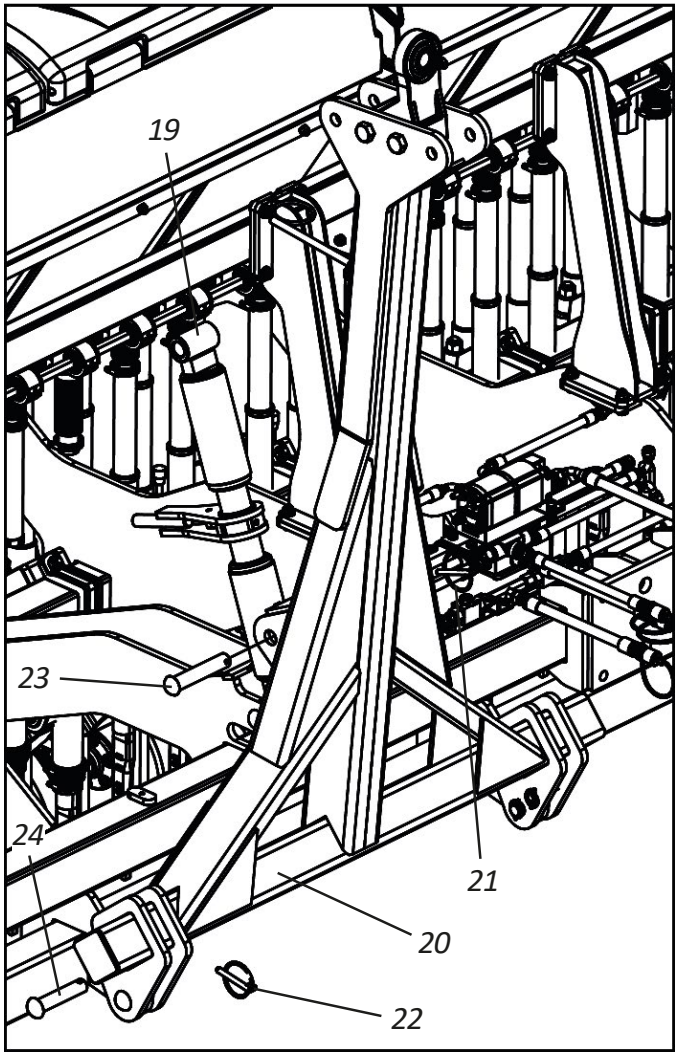

Transportation

• Transporting the SKADI with side transport system (Optional) - Part V

10 **-** Then, raise the lines by fully activating the stroke of the hydraulic cylinders (25) and place the locks (26) on their rods by locking them through the pins (27) and locks (28).

11 **-** Then, close the hydraulic cylinders (30) of the **SKADI** work wheels.

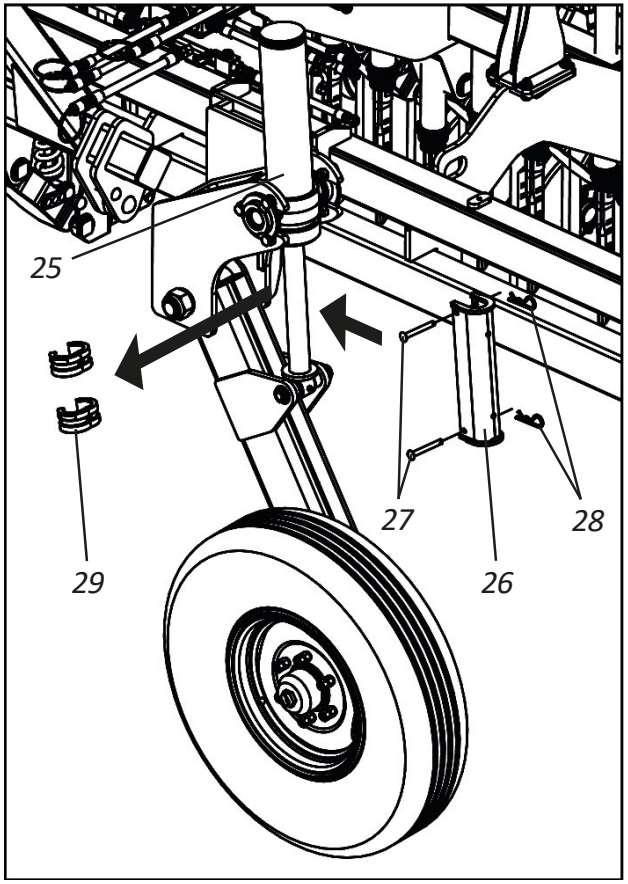

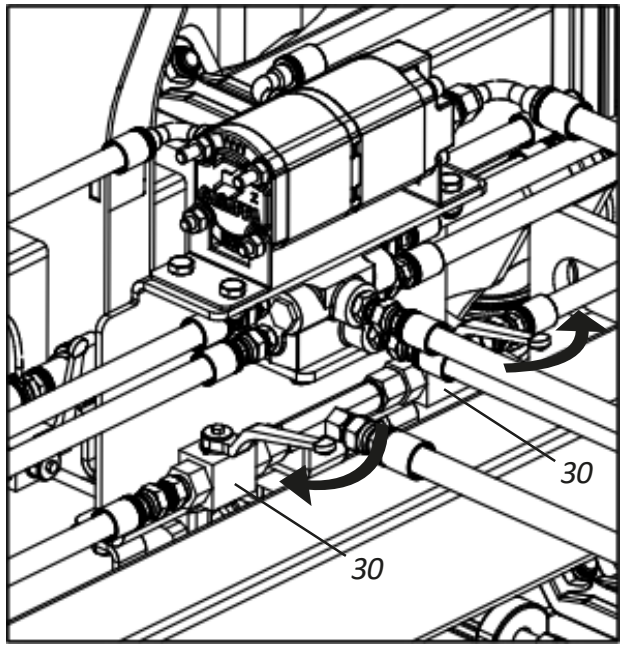

NOTE

If you have previously worked with SKADI and used the limit rings (29) on the hydraulic cylinders (25), they must be removed to place the locks (26).

▪ Transportation

• Transporting the SKADI with side transport system (Optional) - Part VI

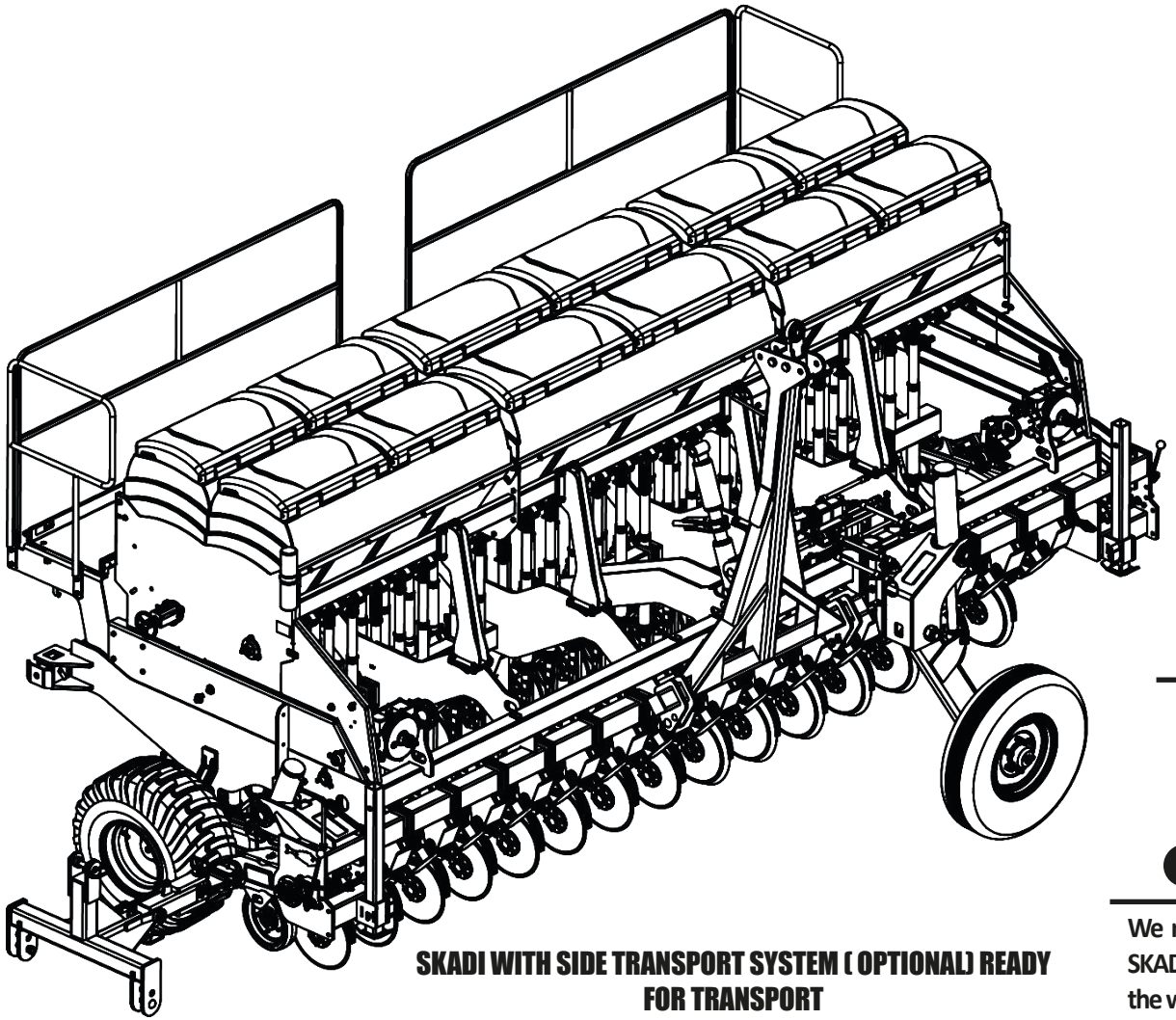

SKADI WITH SIDE TRANSPORT SYSTEM (OPTIONAL) READY FOR TRANSPORT

⚠ ATTENTION

Only transport to SKADI when all procedures on pages 41 to 45 have been performed. Do not transport SKADI with the ladder open, follow the directions on page 55.

IMPORTANT

We recommend not carrying the SKADI while it is loaded. Fill it up at the workplace.

NOTE

If SKADI is going to remain in the field for any reason, we recommend covering it with waterproof tarpaulin to prevent moisture.

▪ Work

• Working with the SKADI without a side transport system - Part I

To work with the **SKADI** without a side transport system, proceed as follows:

01 - Collect the front support brackets (1) and secure them with the pins (2) and locks (3).

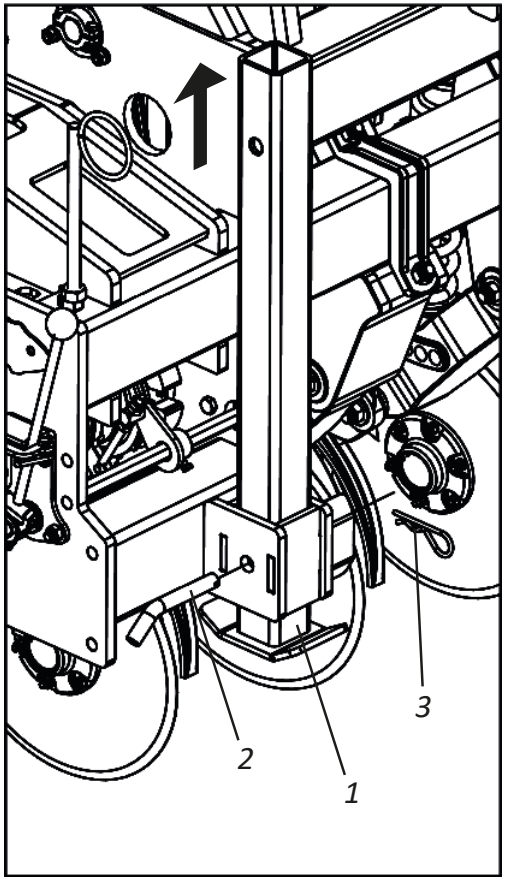

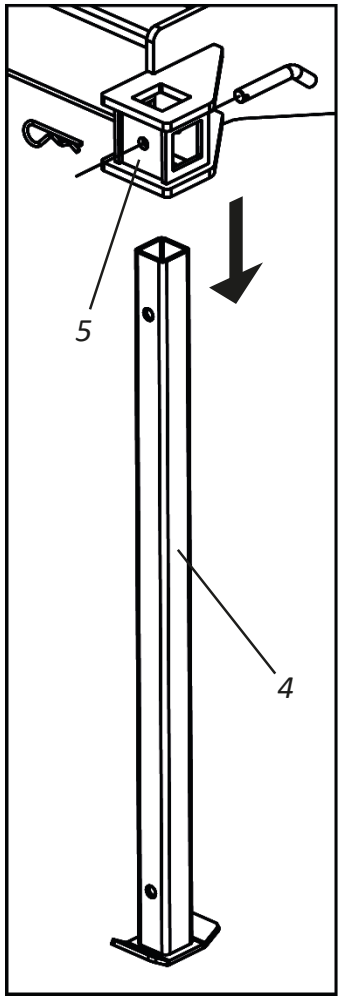

02 - Then, remove the rear support brackets (4) from the upright (5) and place them in the horizontal position, fixing them with the pins (6) and locks (7).

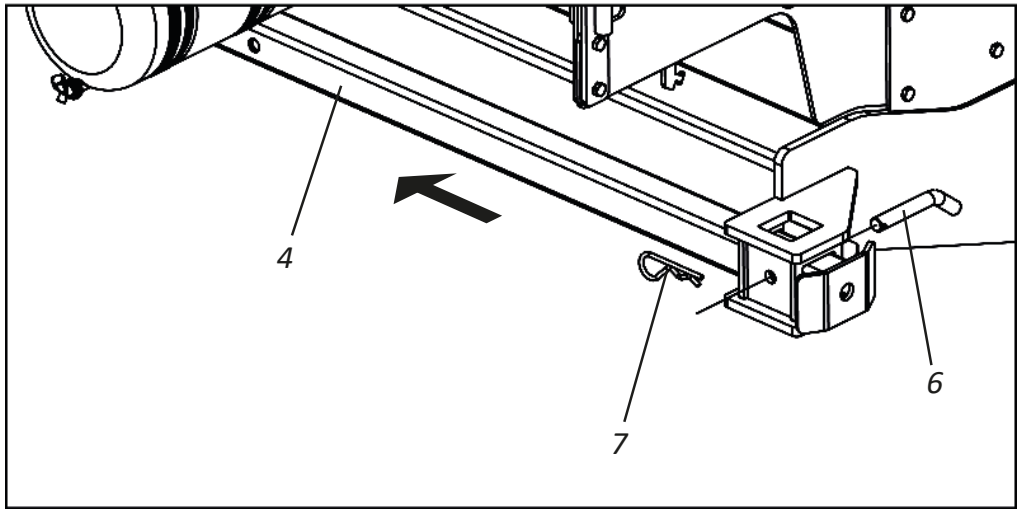

▪ Work

• Working with the SKADI without a side transport system - Part II

03 - Then, lift the lines by fully activating the stroke of the hydraulic cylinders (8) and place the limiting rings (9) on their rods according to your work needs.
04 - Then, check that the seeder is level with respect to the ground, if not, level it using the regulator (11) of the coupling head (12).

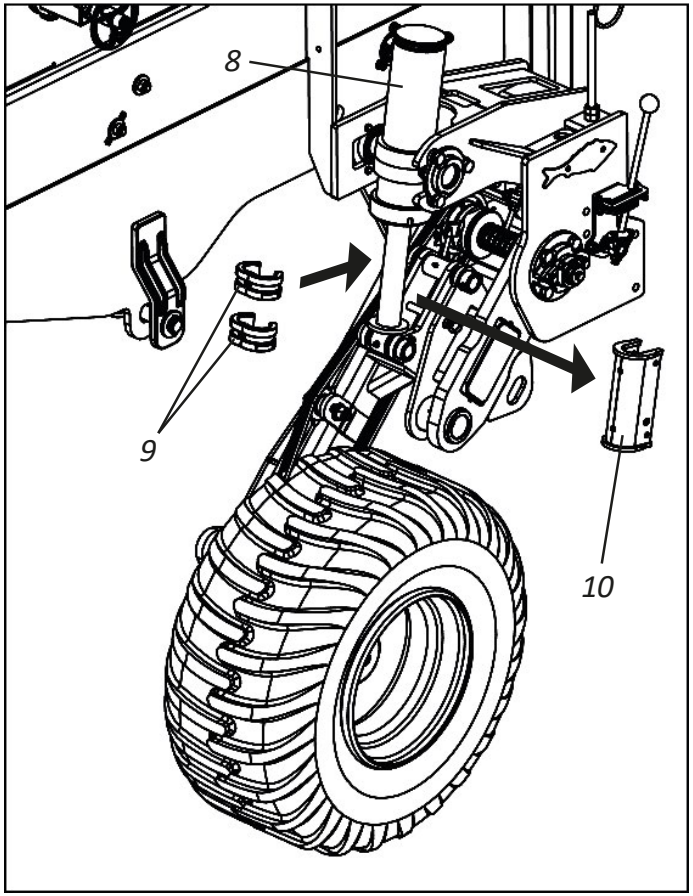

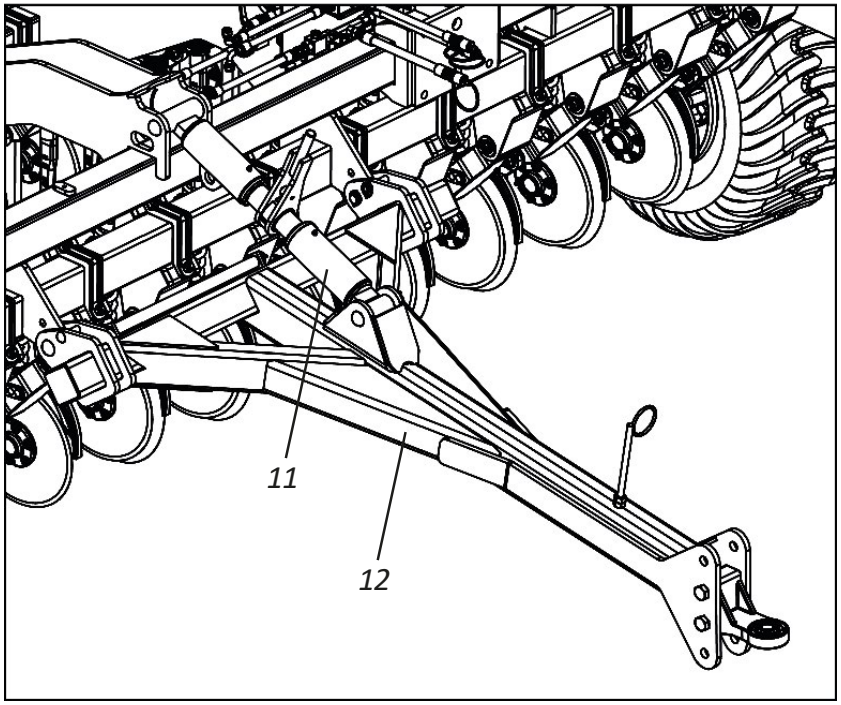

⚠ ATTENTION

After attaching the limiting rings (9), the seeder will always operate at the same depth in both hard and loose terrain, because the limiting rings (9) are limiting the course of the hydraulic cylinders (8), that is, preventing the oscillation of the wheels.

NOTE

If you have previously transported SKADI and used the locks (10) on the hydraulic cylinders (8), they must be removed to place the limit rings (9).

▪ Work

• Working with the SKADI without a side transport system - Part III

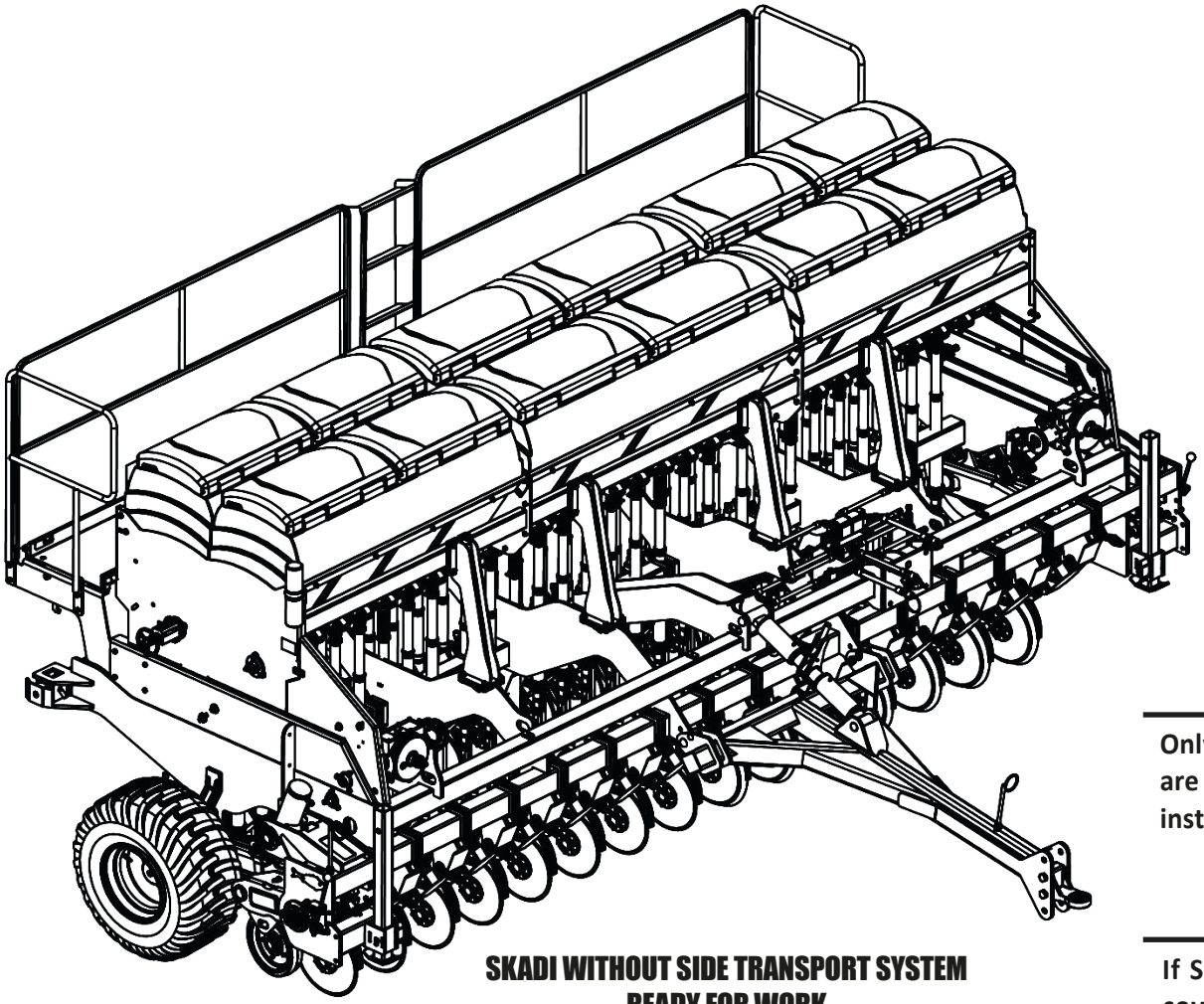

SKADI WITHOUT SIDE TRANSPORT SYSTEM
READY FOR WORK

⚠ ATTENTION

Only work with the SKADI when all of the procedures on pages 47 and 48 are completed. Do not work with SKADI with the ladder open, follow the instructions on page 55.

NOTE

If SKADI is going to remain in the field for any reason, we recommend covering it with waterproof tarpaulin to prevent moisture.

▪ Work

• Working with the SKADI with side transport system (Optional) - Part I

To work with **SKADI** with a side transport system, proceed as follows:

01 - Collect the front support brackets (1) and secure them with the pins (2) and locks (3).

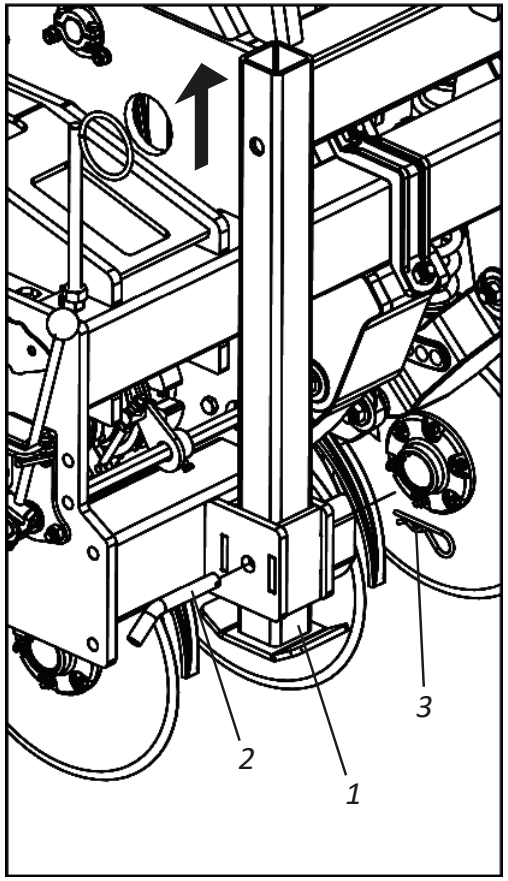

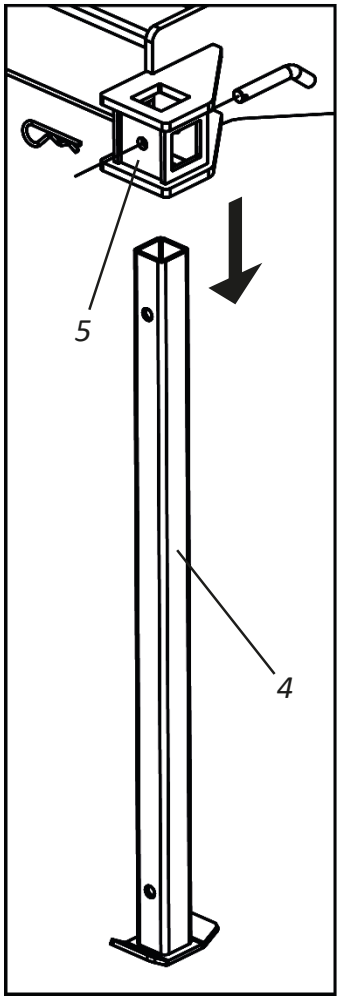

02 - Then, remove the rear support brackets (4) from the upright (5) and place them in the horizontal position, fixing them with the pins (6) and locks (7).

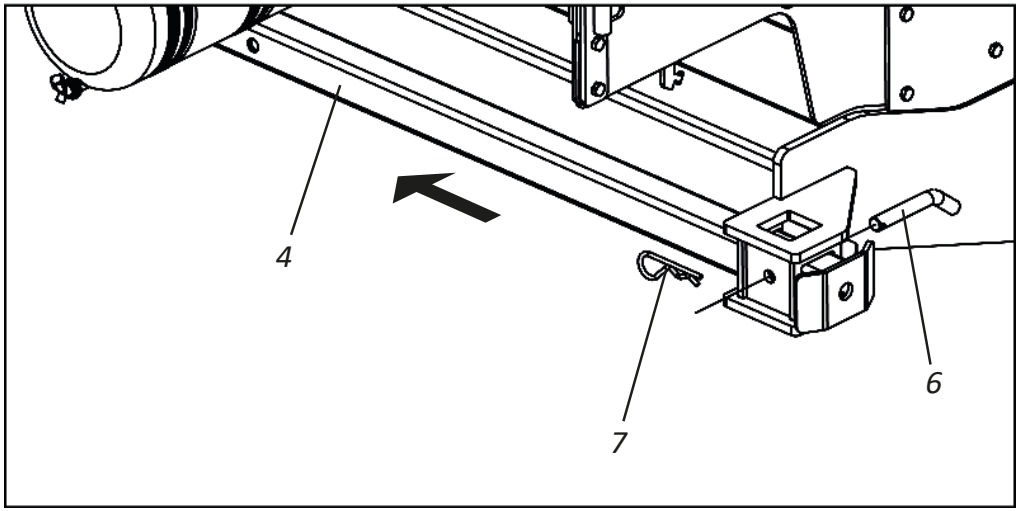

▪ Work

• Working with the SKADI with side transport system (Optional) - Part II

03 - Then, attach the tractor to the **"A"** points on the transport head (12), release the lock (13), flat washer (14) and remove the pin (15) to uncouple the transport head (12) from the shackle (16).

04 - Then, release the locks (17 and 18) and remove the pins (19 and 20).

05 - Then, articulate the support (21) of the transport head (12) locking it through the pin (19) and lock (17).

06 - Then, replace the pin (20) and the lock (18) on the transport head (12).

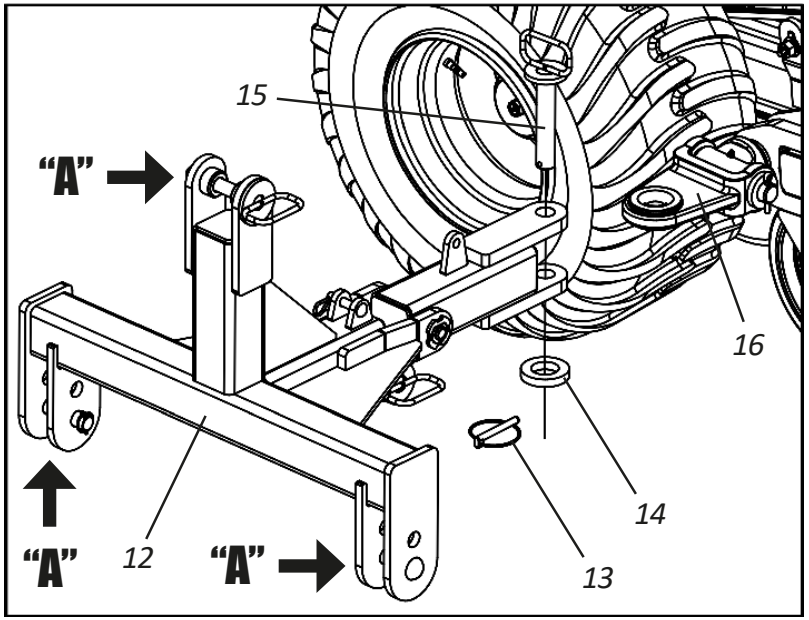

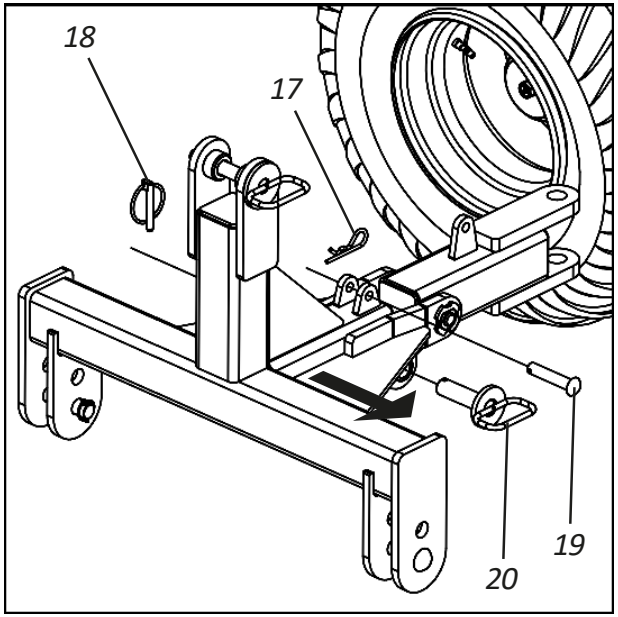

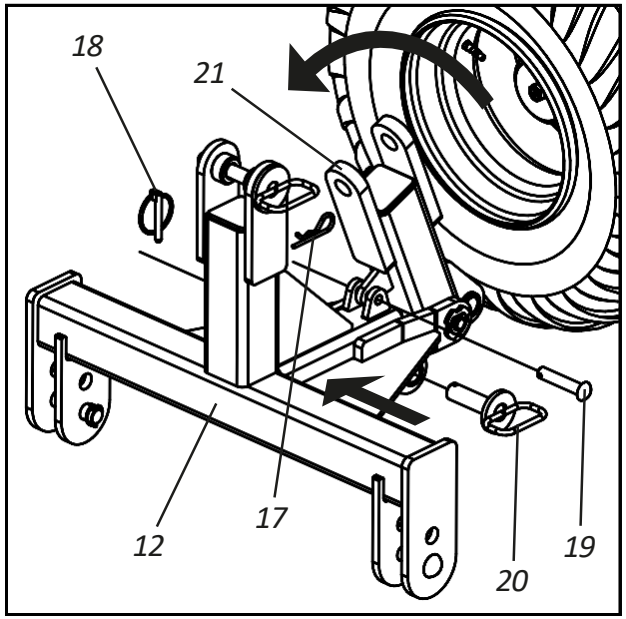

⚠ ATTENTION **After replacing the pin (20) and the lock (18), activate the tractor's hydraulics to raise the transport head (12). The transport head (12) will be articulated on the tractor hydraulics and SKADI will be coupled to the tractor drawbar.**

Work

• Working with the SKADI with side transport system (Optional) - Part III

07 - Then, rotate the shackle (16) locking it in the wheel support (22), using the pin (15), flat washer (14) and lock (13) that fixed the transport head to the shackle.

08 - Then, place the limiting rings (23) on the rods of the hydraulic cylinders (24) and lower the lines closing the full stroke of the hydraulic cylinders (24).

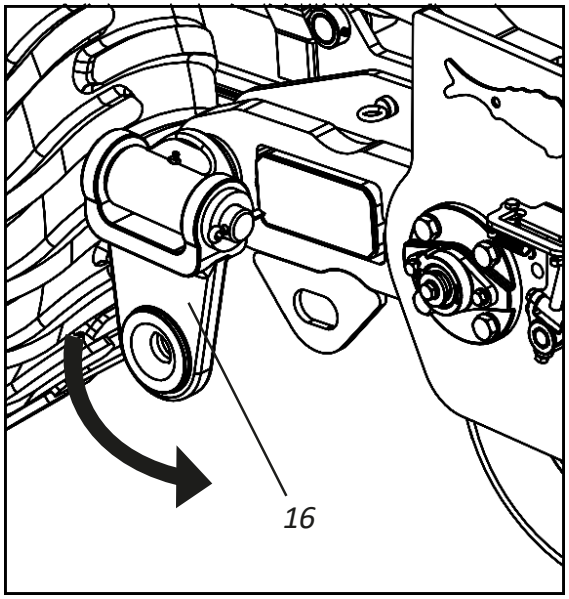

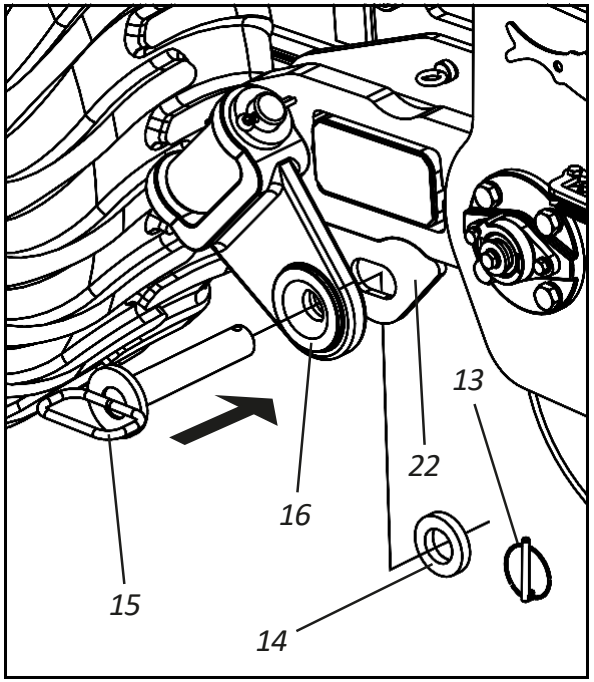

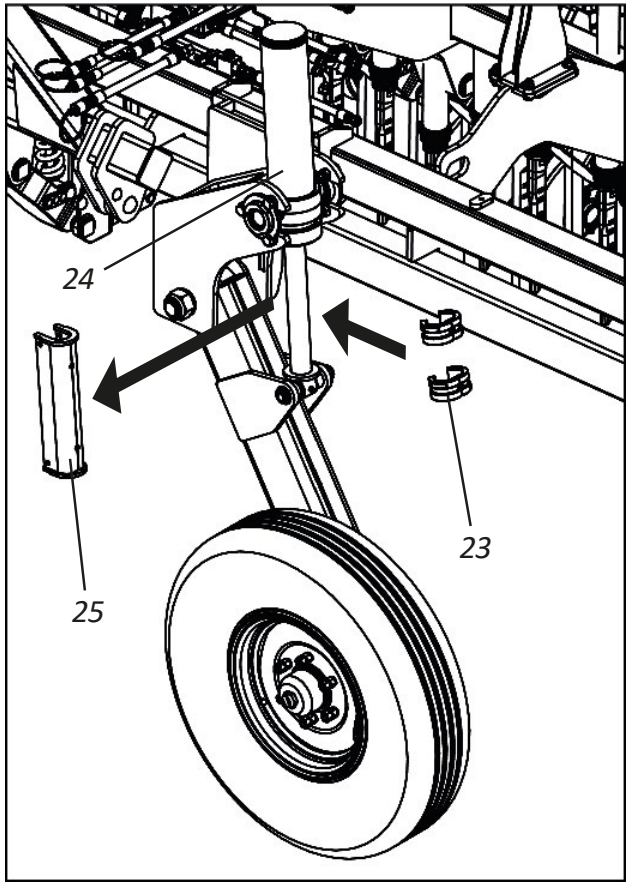

NOTE

If you have previously transported the SKADI and used the locks (25) on the hydraulic cylinders (24), they must be removed to place the limit rings (23).

Work

• Working with the SKADI with side transport system (Optional) - Part IV

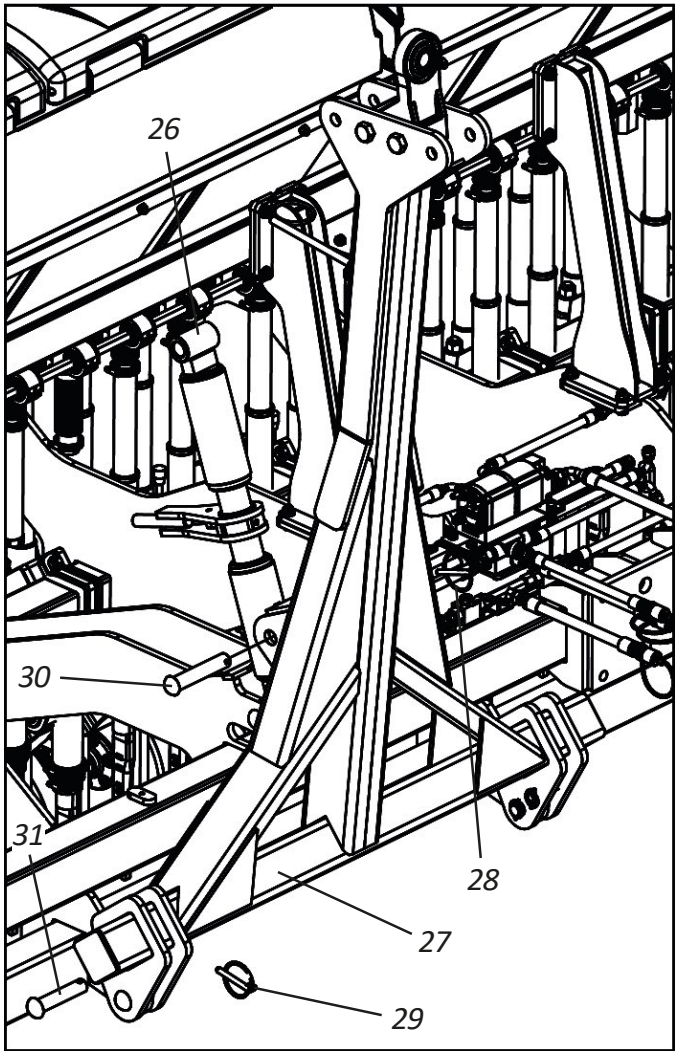

09 - Then, unlock the regulator (26) and the coupling head (27) by removing the locks (28 and 29) and the pins (30 and 31).

10 - Then lower the coupling head (27) and the regulator (26) and lock them through the pins (31 and 30) and the locks (29 and 28).

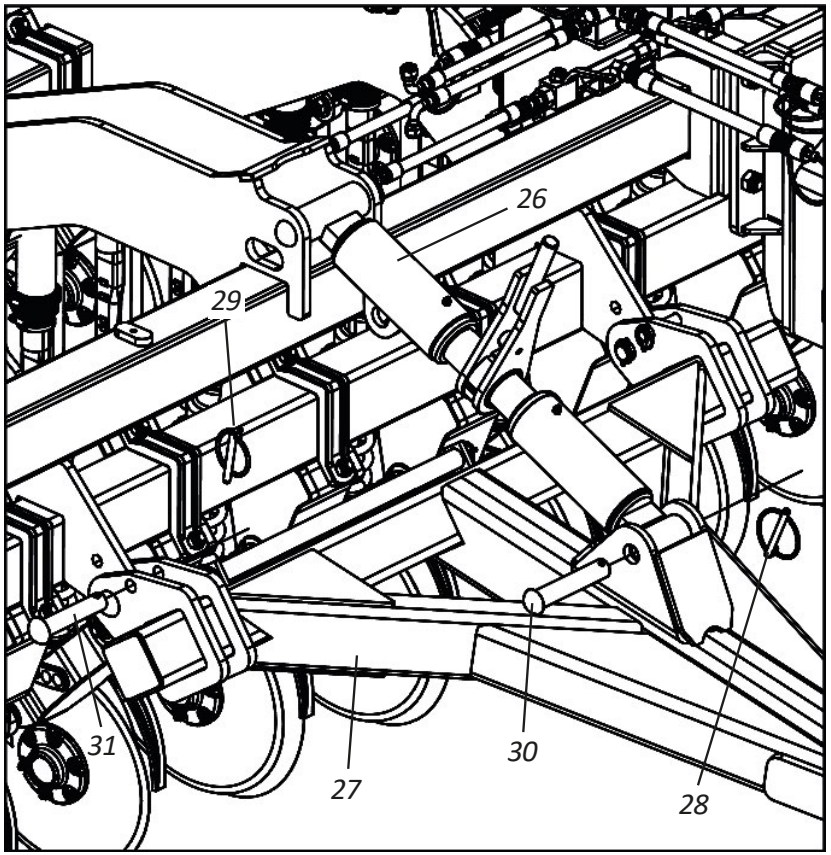

11 - Then, close the register (32) of the hydraulic cylinders (24) of the side transport.

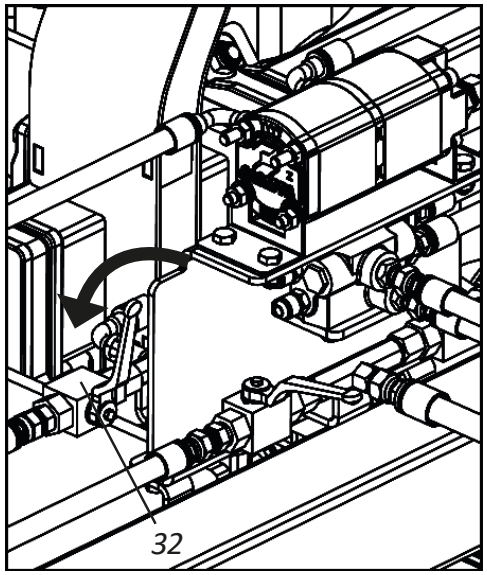

▪ Work

• Working with the SKADI with side transport system (Optional) - Part V

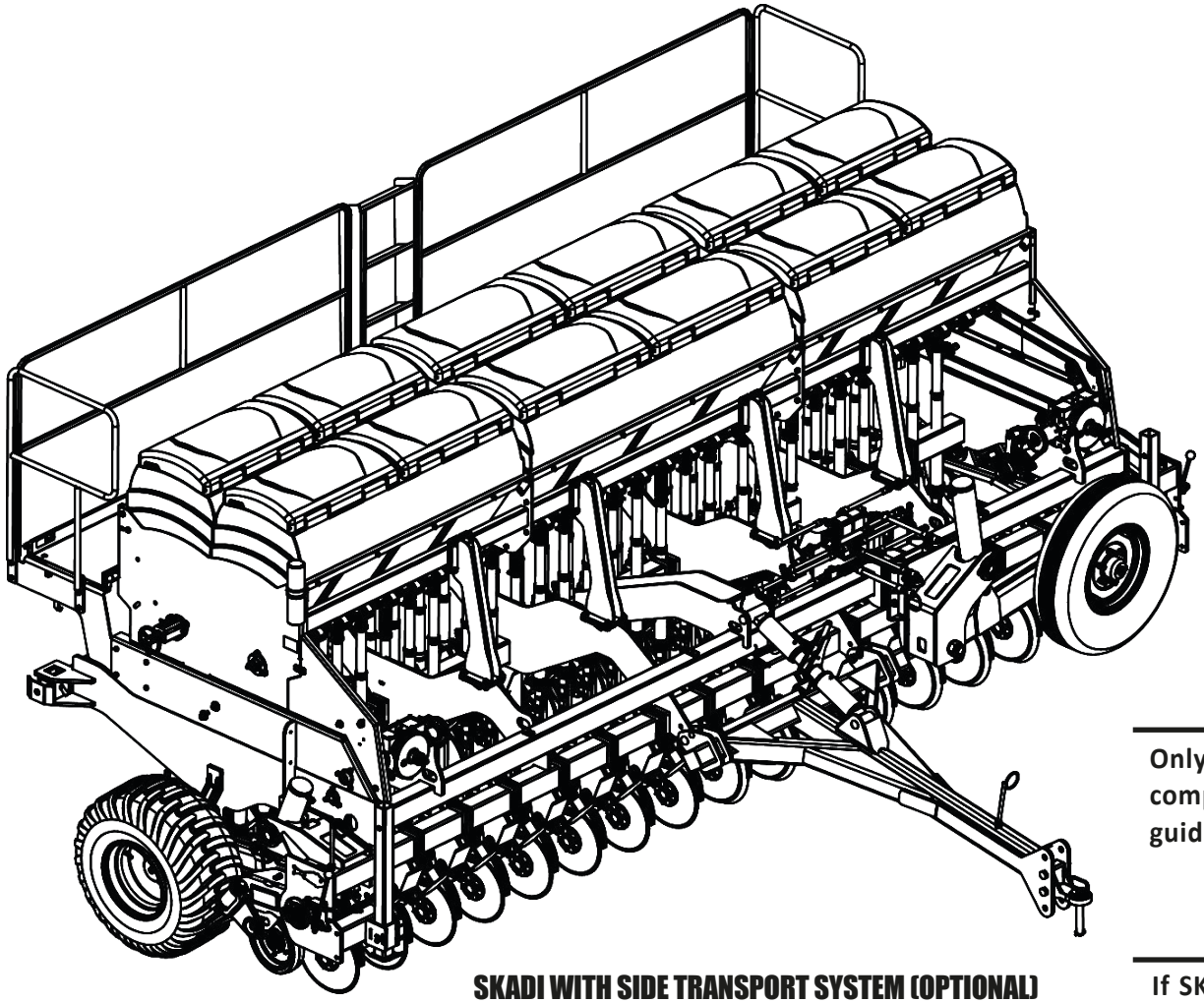

SKADI WITH SIDE TRANSPORT SYSTEM (OPTIONAL) READY FOR WORK

⚠ ATTENTION

Only work with SKADI when all of the procedures on pages 50 to 53 are completed. Do not work with SKADI with the ladder open, follow the guidelines below.

NOTE

If SKADI is going to remain in the field for any reason, we recommend covering it with waterproof tarpaulin to prevent moisture.

▪ Work

• Use of the ladder

The articulated ladder (1) should only be used when filling or servicing the **SKADI** tanks. Before using the articulated ladder (1), make sure that the seeder is stopped and the tractor is switched off.

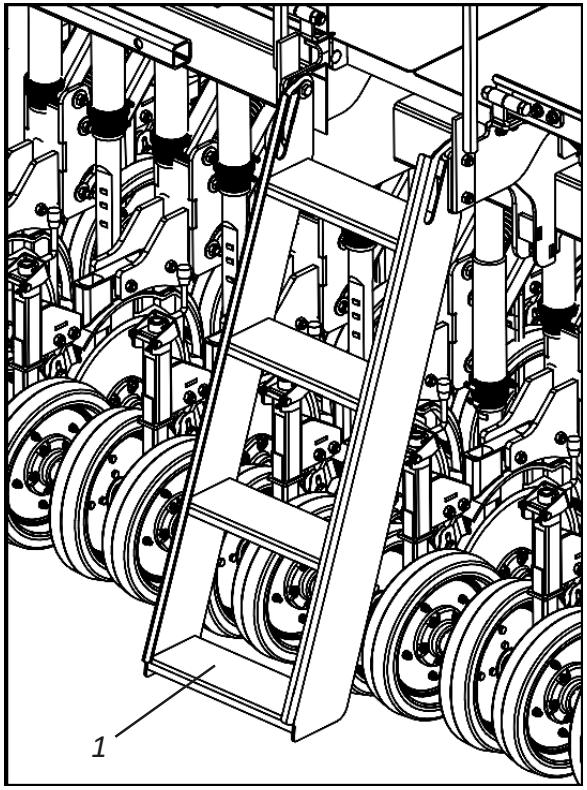

OPEN POSITION:

FOR MAINTENANCE OR SUPPLY OF THE DEPOSIT

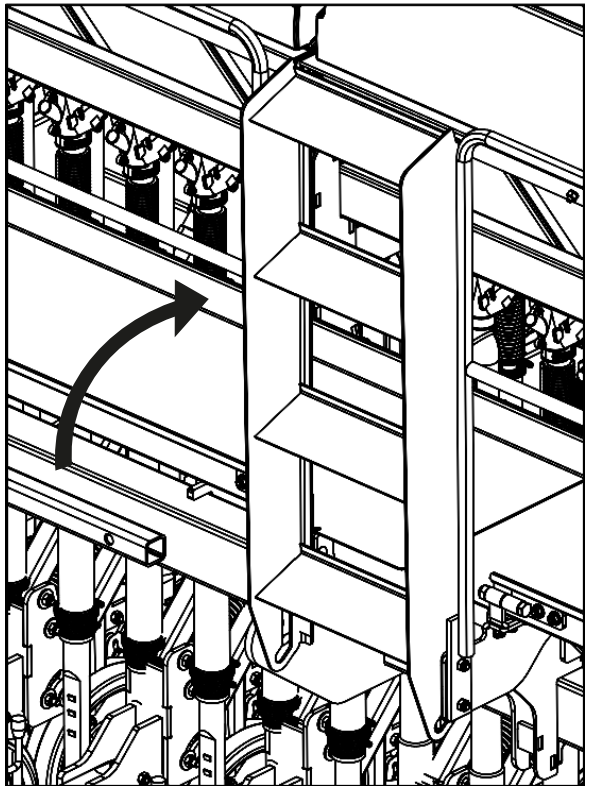

CLOSED POSITION:

FOR WORK OR TRANSPORT

⚠ ATTENTION

Do not remain on the ladder when the seeder is working or transported.
Do not work or transport the seeder while the ladder is open.
Do not transport people on the platform, ladder or any other part of the seeder. Ignoring these warnings could result in serious accidents or even death.

! IMPORTANT

The articulated ladder (1) should only be used when filling or maintaining tanks.
The articulated ladder (1) complies with NBR standards.

▪ Adjustments

• Line markers adjustment

The adjustment of the line markers is important to obtain evenly spaced planting, making so that the edge line of the seeder is at the same spacing as the last planted line, facilitating future operations. To adjust the line markers, proceed as follows:

01 - First of all, you must know the line spacing, the number of lines to be used in the operation and the tractor's front gauge. Use the formula below, followed by an example.

EXAMPLE: For a planting with 25 rows in the seeder, spacing of 0.17 mts and the front gauge of the tractor with 1.43 mts, determine:

Fórmula: $D = \frac{E \times (N+1) - B}{2}$

Resolve: $X = \frac{0{,}17 \times 26 - 1{,}43}{2}$

D = 1,49 meter

ONDE:
E = Line spacing (mts)
N = Number of seeder rows
B = Front gauge of tractor
D = Marker distance

02 - Set the 1.49 m line marker disc to the center of the first planting line.

03 - The line markers are alternative, lower one after the other, so if during the planting before finishing the line there is a need to interrupt the work, activate the piston so that the seeder goes up and down twice to continue working with the marker on the right side.

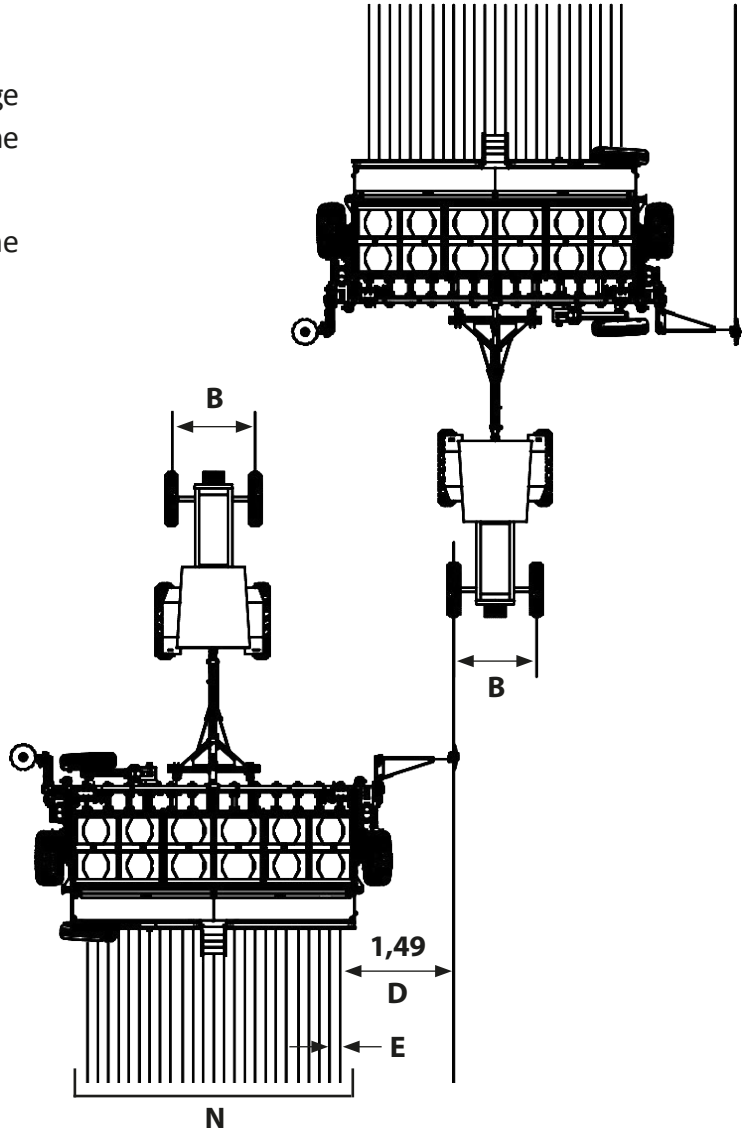

⚠ ATTENTION **Evite acidentes provocados pela ação intermitente dos marcadores de linha. Ao acionar a semeadora, observe se não há pessoas sob os marcadores de linha ou na área de ação dos mesmos.**

▪ Adjustments

• Adjusting the line marker discs

The discs (1) of the line markers (2) have angular adjustment to facilitate the demarcation work on the ground. To adjust the disks (1) of the line markers (2), proceed as follows:

01 - Loosen the nut (3), turn the disc (1) to the desired position.
02 - Then, retighten the nut (3) fixing the disc (1) in the desired position.

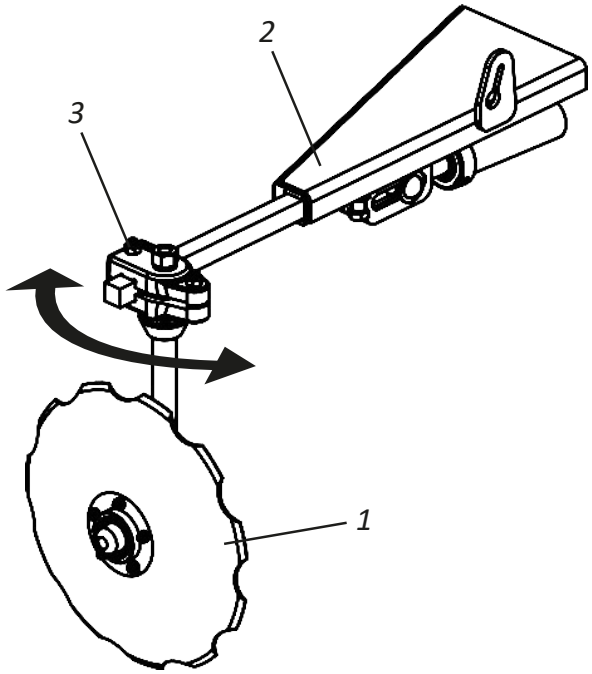

⚠ ATTENTION Before making any adjustments to the line marker, make sure it is on the ground, the seeder is stopped and the tractor is off.

• Adjusting the line marker bar

The line markers (1) have distance regulation to be adjusted according to the number of lines, spacing and gauge of the tractor. To adjust the distance of the line markers (1), proceed as follows:

01 - Loosen the screw (2), move the bar (3) in the desired position.
02 - Then, retighten the screw (2) fixing the bar (3) in the desired position.

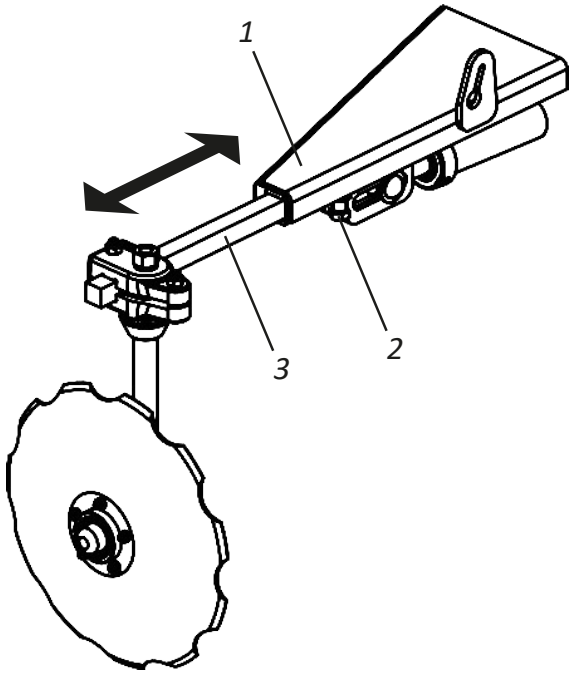

! IMPORTANT To find out the distance to be adjusted in the line marker, do the calculation according to the instructions on the previous page.

Adjustments

• Ratchet adjustment

When placing the shims on the hydraulic cylinder to limit the depth of the discs according to the instructions on page 45, then adjust the ratchet (1) according to the need for work, thus ensuring the activation of the transmission system. To adjust the ratchet (1), proceed as follows:

01 - Loosen the nuts and counter nuts (2), adjust the rod (3) for the correct activation of the ratchet disarming system (1).
02 - Then, retighten the nuts and lock nuts (2).

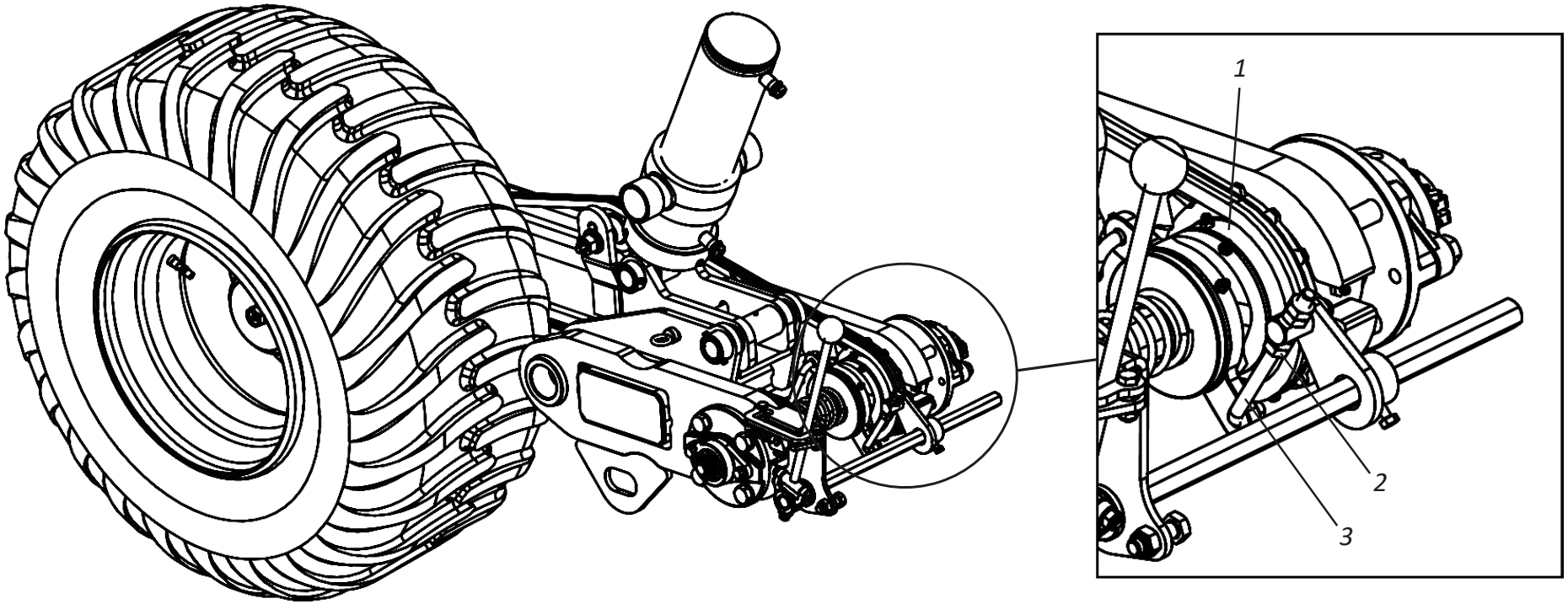

⚠ ATTENTION | **Failure to observe this regulation may cause the ratchet to disarm.**

! IMPORTANT | **When adjusting the ratchet, repeat this procedure on all ratchets on the seeder.**

Systems

• Trimming system

The **SKADI** leaves the factory with a finishing system that allows planting with only one side of the seeder, that is, half the rows. To trigger the trimming, proceed as follows:

01 - Choose the side of the seeder to be finished off.
02 - Then, with the tractor and the seeder stopped, manually activate the lever (1) for the chosen side.

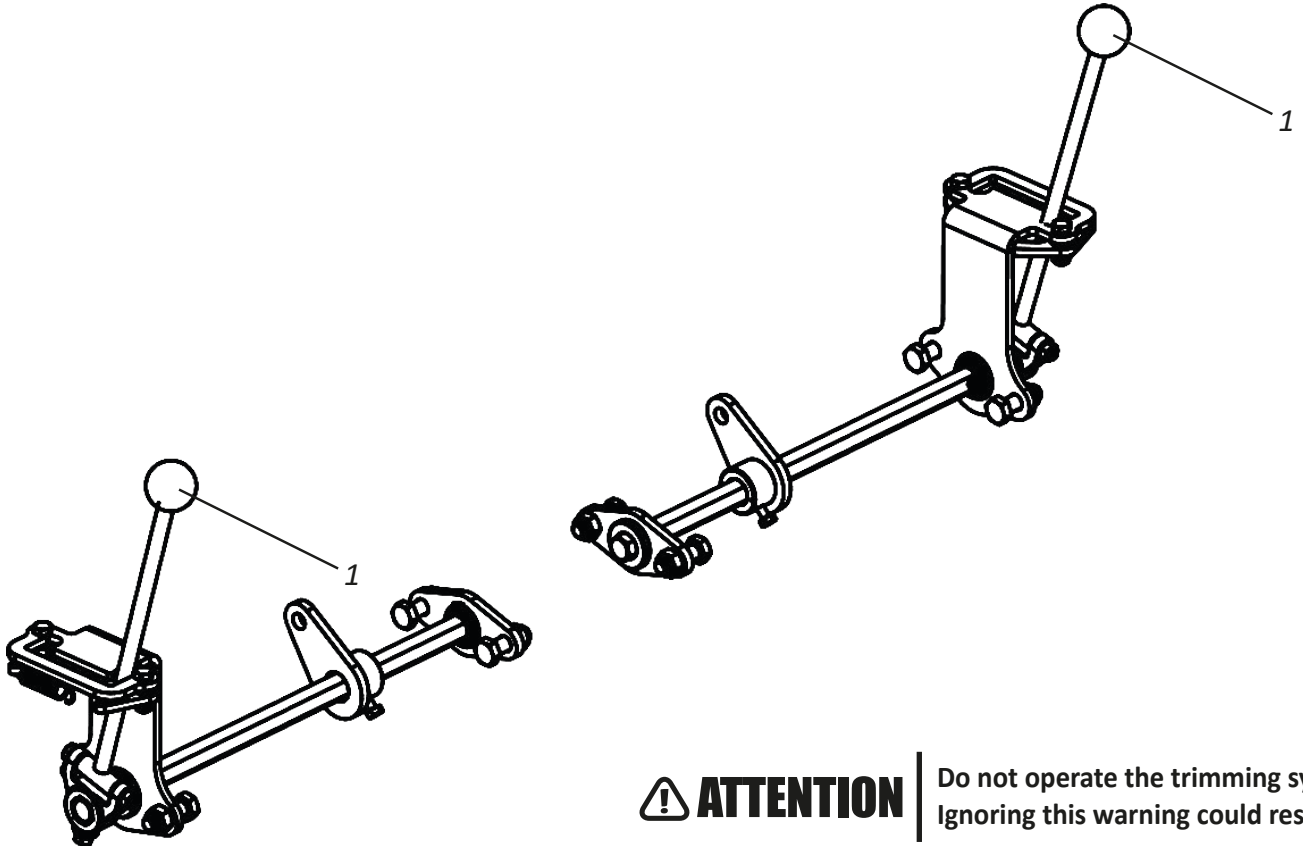

ATTENTION **Do not operate the trimming system with the tractor and the seeder in motion. Ignoring this warning could result in serious accidents or death.**

Systems

• ETD (Electronic Dosing Table) System - Optional

The **SKADI** can be optionally purchased with the **ETD** (Electronic Dosing Table) system. The **ETD** is an electronic device that can be connected to planters, seeders, and fertilizers to assist the operator in configuring the best gear ratio so that the correct dosage of seeds and fertilizers occurs, according to the needs of each area/plot, based on the adjustments previously done in the field and calibrations before planting. It allows to perform other additional functions such as the registration of planted hectares, hours actually worked and planting speeds above specified, and this important information is recorded and shown on the **ETD** electronic device display.

⚠ ATTENTION

To use the ETD (Electronic Dosing Table), refer to the instruction manual on pages 101 to 112.

• VISUM System (Fertilizer and Fine Grains) - Optional

The **SKADI** can be optionally purchased with the **VISUM** system (Fertilizer and Fine Grains). The **VISUM** sensor is the technology that allows the farmer to remotely monitor the presence or absence of the flow of fertilizer/fine grains, alerting to possible clogging and failures. When there is an interference in the flow of the metered input, a quick response is sent to the user.

VISUM MONITOR | VISUM ADUBO | VISUM GRÃOS FINOS

⚠ ATTENTION

To use VISUM (Fertilizer and Fine Grains), refer to the instruction manual on pages 113 to 129.

Seed distribution system

• Seed regulation - Part I

The **SKADI** has seed distribution boxes (1), which have 03 (three) adjustment points used according to the size of each type of seed to be used, which are:

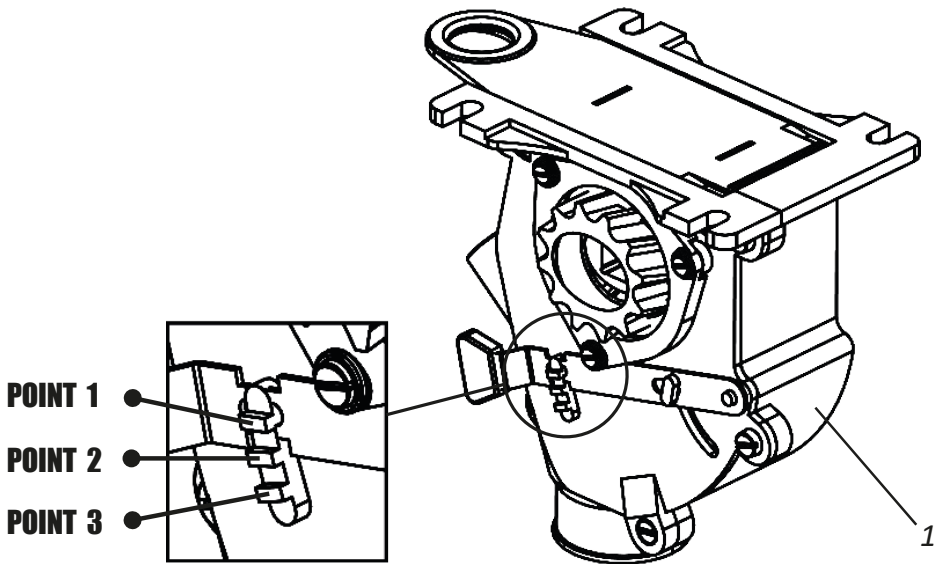

POINT 1: For SMALL seeds	WHEAT, RICE, OATS, AND SIMILAR
POINT 2: For AVERAGE seeds	SOY, RICE, PEA, ETC
POINT 3: For BIG seeds	SOY, ETC

⚠ ATTENTION

Failure to follow the instructions above may cause damage to the seeds and/or change in the quantity of seeds distributed.

The adjustment of seed distribution is done through the handwheel (2), for this, proceed as follows:

01 - Pull the handwheel (2) forward to unlock it.

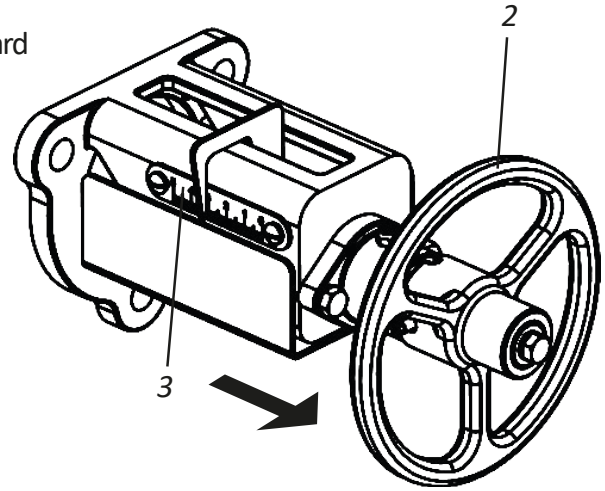

02 - Then, turn the handwheel (2) in the **"A"** or **"B"** direction, adjusting the dosing scale (3) to the value found in the table on the next page, according to your need and working condition.

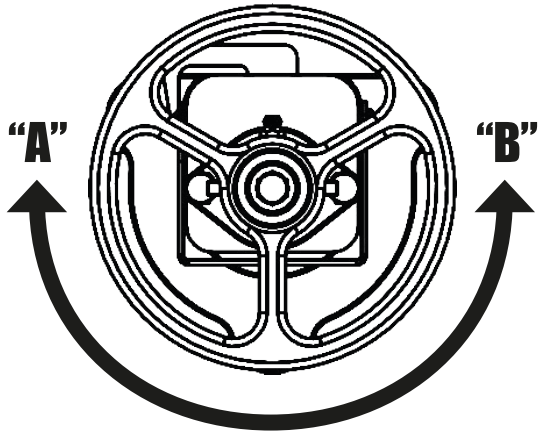

Seed distribution system

• Seed regulation - Part II

03 - Then, push the steering wheel (2) backwards, locking it.

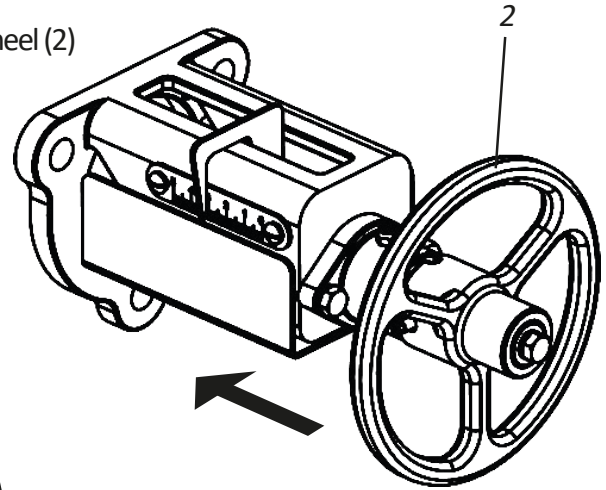

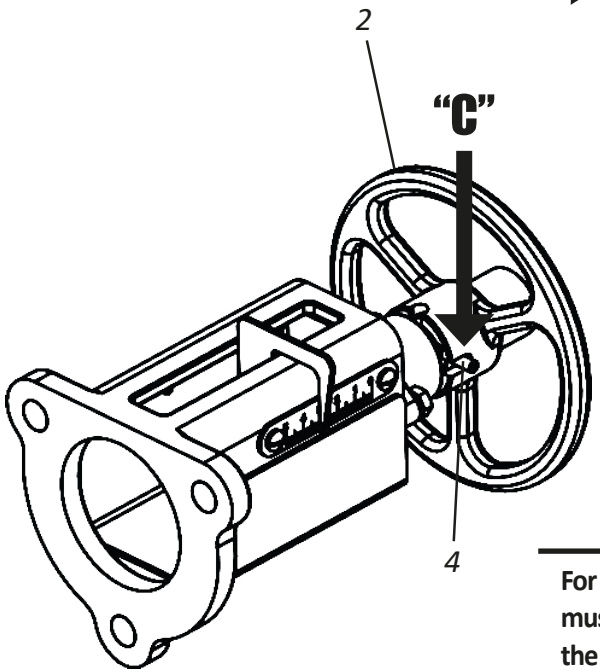

⚠ ATTENTION

For the handwheel (2) to lock, it must be positioned the hole "C" in the center of the elastic pin (4).

• Adjusting for seed distribution - Part I

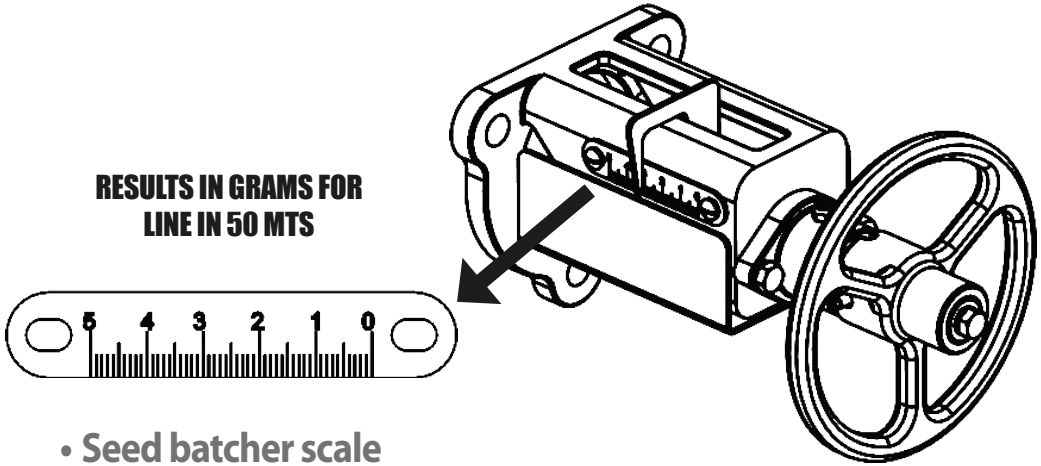

• Seed batcher scale

		Seed Adjustment											
		0	5	10	15	20	25	30	35	40	45	50	
Seed distributor points	1	-	19	64	109	158	214	281	332	397	452	507	SOY
	2	-	26	83	133	192	250	330	402	473	549	605	
	3	-	33	97	158	223	293	379	423	541	624	696	
Seed distributor points	1	-	19	40	59	78	101	130	158	186	213	237	RICE
	2	-	23	47	69	92	120	151	182	212	241	269	
	3	-	25	50	78	102	132	168	203	239	272	304	
Seed distributor points	1	-	37	73	110	146	187	232	277	321	365	407	WHEAT
	2	-	51	83	125	167	217	278	332	389	444	495	
	3	8	55	110	165	210	272	321	371	421	470	522	

Seed distribution system

• Adjusting for seed distribution - Part II

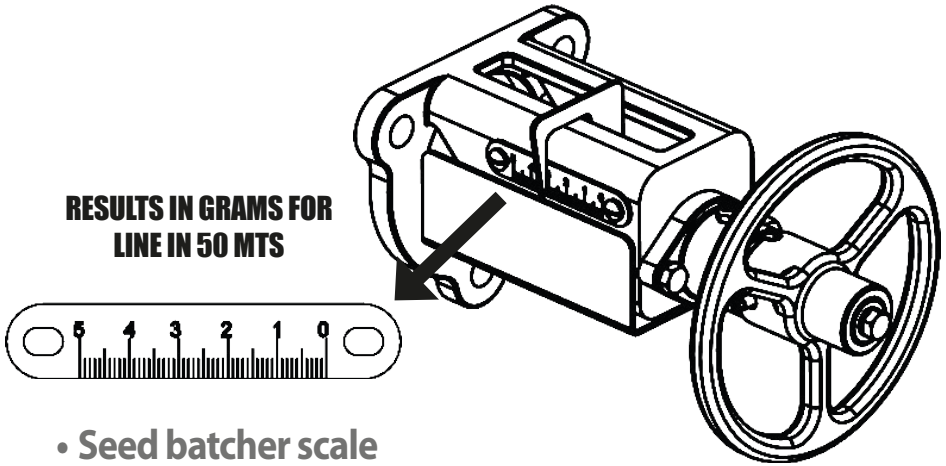

• Seed batcher scale

		Seed Adjustment											
		0	5	10	15	20	25	30	35	40	45	50	
Seed distributor points	1	-	19	64	109	158	214	281	332	397	452	507	SOY
	2	-	26	83	133	192	250	330	402	473	549	605	
	3	-	33	97	158	223	293	379	423	541	624	696	
Seed distributor points	1	-	19	40	59	78	101	130	158	186	213	237	RICE
	2	-	23	47	69	92	120	151	182	212	241	269	
	3	-	25	50	78	102	132	168	203	239	272	304	
Seed distributor points	1	-	37	73	110	146	187	232	277	321	365	407	WHEAT
	2	-	51	83	125	167	217	278	332	389	444	495	
	3	8	55	110	165	210	272	321	371	421	470	522	

⚠ ATTENTION

Before starting sowing, check that the distribution is correct in relation to the distribution table on the side.

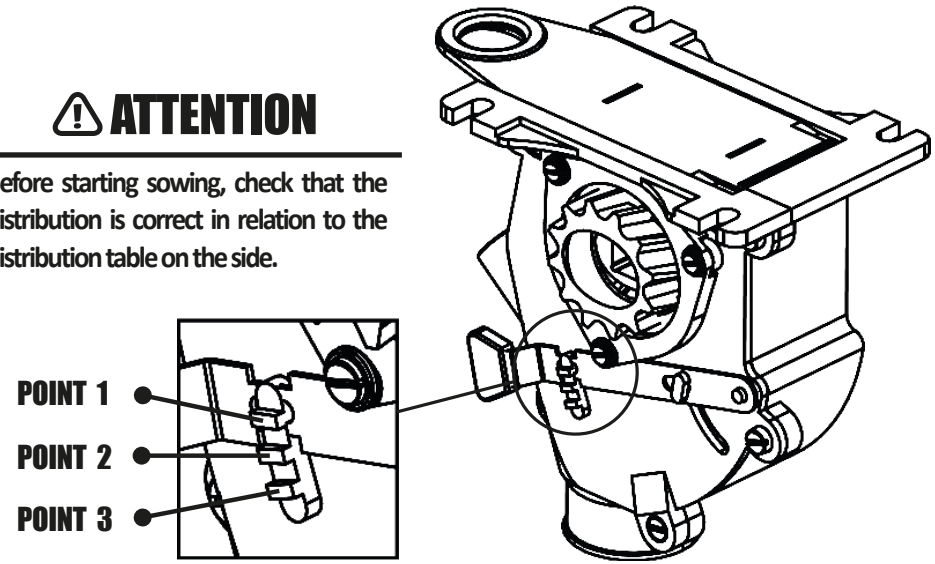

• To calculate the amount of fertilizer and seed for Ha or AA, the operator must:

01 - Know the amount of fertilizer and seed to be applied by (Ha) or (AA).
02 - Know the spacing between rows of the seeder.
03 - Calculate by Ha, dividing Ha = 10,000 m² by the spacing to be planted.
04 - If the calculation is made by AA, divide the AA = 24,200 m² by the spacing to be planted.
05 - And finally, divide the amount of fertilizer and seed to be applied by the linear meters.
06 - To measure the weight, collect the fertilizer or seed in 10 or more meters rotated to make the weighing.

▪ Seed distribution system

• Regulation of distribution of the fine seed box "Pasture" (Optional)

The **SKADI** can be purchased optionally with a fine "pasture" seed box. To adjust the "pasture" fine seed box, proceed as follows:

01 - Consult the distribution table below and check the desired amount per hectare.

Distribuição de sementes pastagens (kg/ha) com espaçamento de 170 mm									
		Número da Escala							
	Tipo de Cultura	0,5	1,0	1,5	2,0	2,5	3,0	3,5	4,0
GRAMÍNEAS	COLONIÃO	-	2,0	3,5	5,0	9,0	10,0	10,0	11,0
	BRACHIARA COMUM	-	5,0	7,0	10,0	17,0	20,0	20,0	22,0
	BRACHIARA BRIZANTHA	-	3,0	5,0	7,0	14,0	17,0	17,0	20,0
	PAINÇO	3,0	8,0	14,0	20,0	32,0	40,0	40,0	48,0
LEGUMINOSAS	SOJA PERENE	3,5	10,0	17,0	24,0	32,0	41,0	50,0	59,0
	ALFAFA	4,0	12,0	20,0	29,0	38,0	47,0	56,0	65,0
	CORNICHÃO	4,5	13,0	21,0	30,0	40,0	50,0	60,0	70,0
	DESMODIUM	3,8	12,0	19,0	26,0	34,0	43,0	52,0	61,0
	TREVO	3,6	11,0	18,0	25,0	33,0	42,0	51,0	60,0

EXAMPLE:

To distribute 10 kg/ha of guinea grass seed with a spacing of 170 mm, turn the handwheel (1) until the regulator reaches the number 3.5 on the scale (3), as shown in the figure on the side.

02 - Then, unlock the steering wheel (1) through the lock (2).

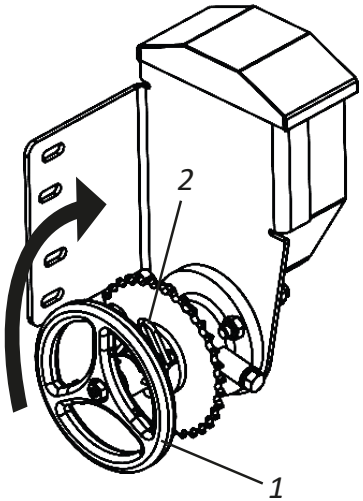

03 - Then, turn the handwheel (1) in the **"A"** or **"B"** direction, adjusting the scale (3) to the value found in the table according to your need and working condition.

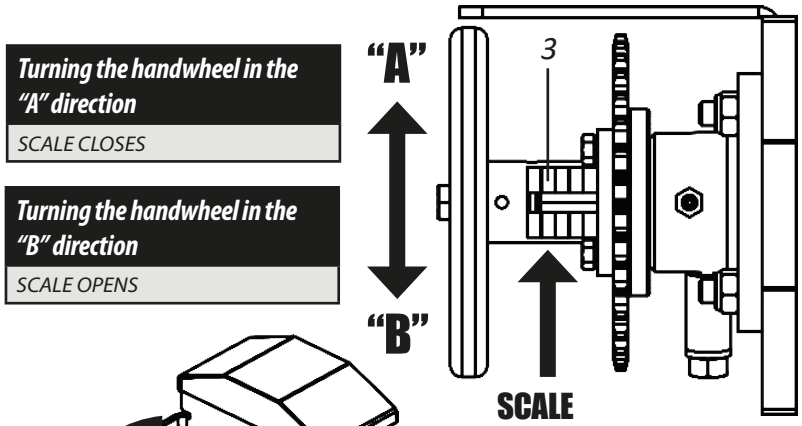

04 - At the end of the adjustment, lock the handwheel (1) through the lock (2).

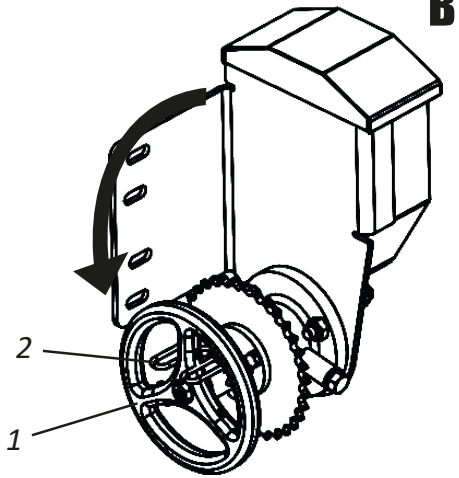

⚠ ATTENTION

The seed distribution table above presents approximate values of distribution per hectare for a spacing of 170 mm. This table may vary according to the types of seed varieties. We recommend doing a practical check before starting planting.

! IMPORTANT

Do not work with the handwheel (1) unlocked. Ignoring this warning may cause variation in seed distribution.

Fertilizer dispensing system

• Fertisystem fertilizer conductor

To conduct the fertilizer from the distributor to the ground, fit the hoses (1) to the fertisystem conductor outlets (2) through the clips (3). Then, attach the telescopic conductors (4) to the hoses (1) fixing through the clips (5). Then, attach the rubber joints (6) to the telescopic conductors (4) fixing through the clips (7). Finish by coupling the spouts (8) to the rubber joints (6) fixing through the clamps (9).

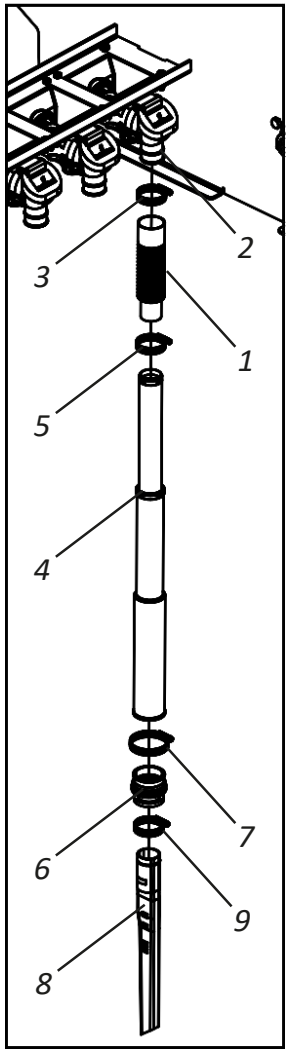

The Fertisystem system has safety outputs that guarantee the proper functioning of the system without damaging it. In case of clogging of the hose and the batcher, clean the batcher until the end of the hose near the furrower rod or double disc, as the system may become clogged by roots, pieces of plastic and other objects.

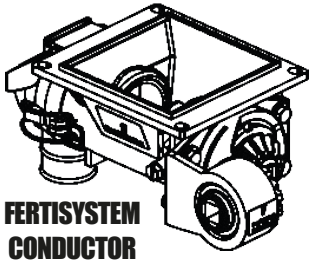

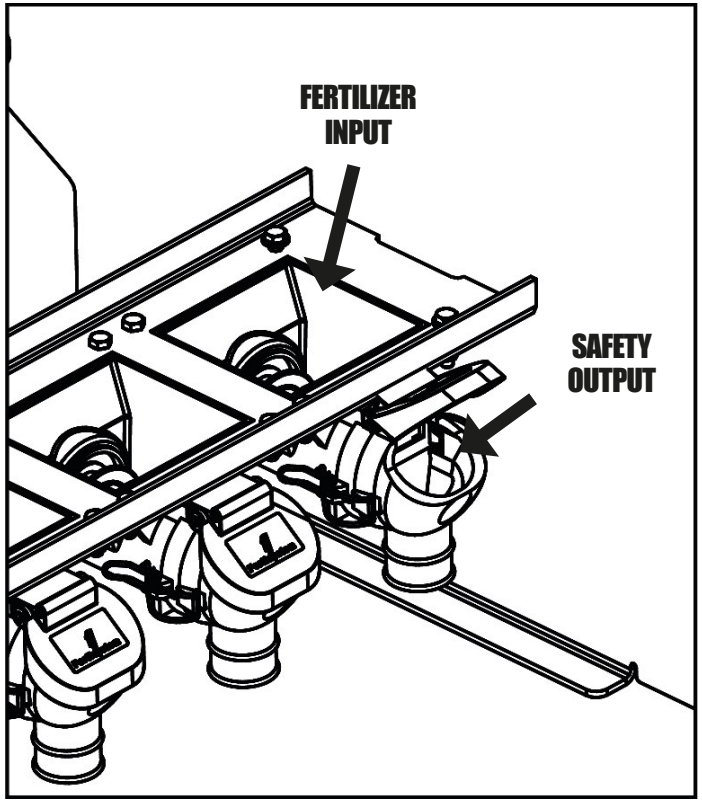

⚠ ATTENTION

Check batchers and hoses daily and clean their outlets. When the fertilizer has impurities or is damp, clean it more often.

▪ Fertilizer dispensing system

• Speed Box

The **SKADI** is equipped with the Speed Box system (1), which activates the distribution system with simple adjustments, ensuring the exchange of fast rotations. To adjust the fertilizer, proceed as follows:

01 - Select the desired quantity in the tables and check the corresponding combination on the levers (2). **EXAMPLE:** Position **F2** in the table, indicates that the lever with letters must be in the **"F"** position and the lever with numbers must be in the **"2"** position.

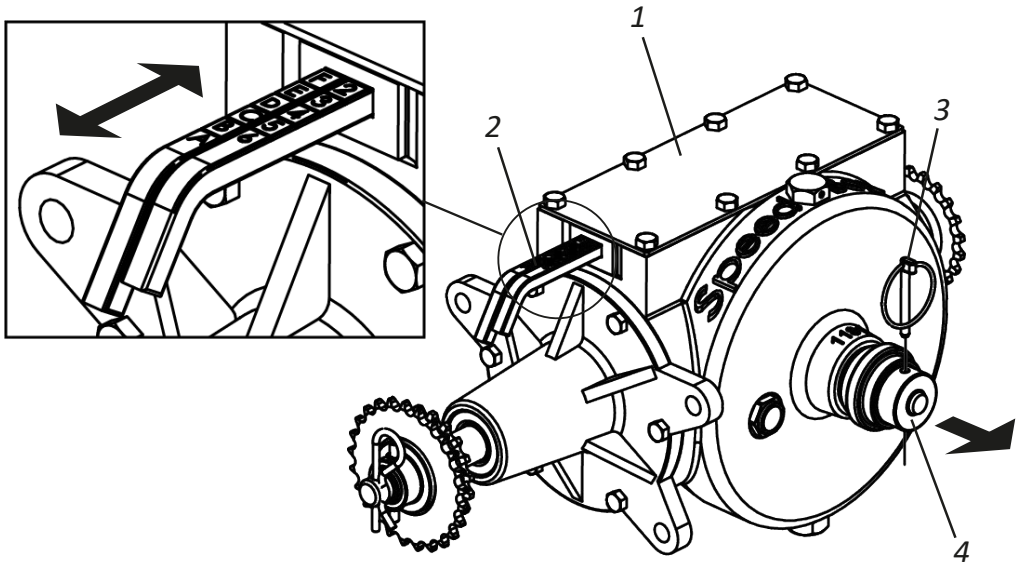

02 - To move the levers, remove the lock (3), pull the handle (4), then adjust the levers according to the example above. When combining is complete, return the handle (4) and replace the lock (3).

• Regulation for fertilizer dispensing

The fertilizer adjustment is done through the Speed Box (1). To obtain more adjustments, reverse the current in the **"A"** and moved **"B"** drive gears. After changing the gears, check the chain tension (2).

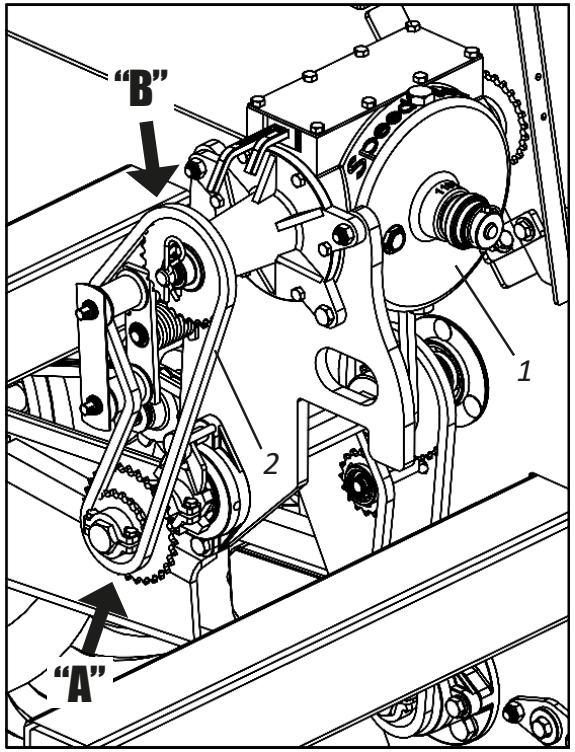

⚠ ATTENTION **When checking the chain tension (2) if more pressure is needed on the tensioner, proceed according to the instructions on page 83.**

FERTILIZER Distribution Table per linear meter - SKADI (Spring with 1" pitch)									
Ratchet hex shaft gear				20	Speed Box Inlet Gear				31
Speed Box combination	Grams 50 m	170	190	210	230	250	270	290	310
F - 1	91	103	92	83	76	70	65	60	56
F - 2	103	115	103	93	85	78	73	68	63
E - 1	114	128	115	104	95	87	81	75	70
F - 3	118	132	118	107	97	90	83	77	72
E - 2	129	144	129	117	107	98	91	85	79
D - 1	137	154	138	125	114	105	97	90	84
F - 4	137	154	138	125	114	105	97	90	84
E - 3	147	165	147	133	122	112	104	97	90
D - 2	154	173	155	140	128	118	109	101	95
C - 1	160	179	161	145	133	122	113	105	98
F - 5	165	185	165	149	136	126	116	108	101
E - 4	171	192	172	156	142	131	121	113	105
D - 3	176	198	177	160	146	134	125	116	108
C - 2	180	202	181	163	149	137	127	118	111
B - 1	183	205	183	166	152	139	129	120	112
A - 1	206	231	206	187	171	157	145	135	127
A - 2	231	260	232	210	192	176	163	152	142
B - 3	235	264	236	213	195	179	166	155	145
C - 4	240	269	241	218	199	183	169	158	148
D - 5	247	277	248	224	205	188	174	162	152
E - 6	257	288	258	233	213	196	182	169	158
A - 3	264	297	265	240	219	202	187	174	163
B - 4	274	308	275	249	227	209	194	180	169
C - 5	288	323	289	261	239	220	203	189	177
D - 6	308	346	310	280	256	235	218	203	190
A - 4	308	346	310	280	256	235	218	203	190
B - 5	329	369	330	299	273	251	232	216	202
C - 6	360	404	361	327	298	275	254	237	221
A - 5	370	415	372	336	307	282	261	243	228
B - 6	411	461	413	374	341	314	291	270	253
A - 6	463	519	464	420	384	353	327	304	285

FERTILIZER Distribution Table per linear meter - SKADI (Spring with 1" pitch)									
Ratchet hex shaft gear				31	Speed Box Inlet Gear				20
Speed Box combination	Grams 50 m	170	190	210	230	250	270	290	310
F - 1	91	246	220	199	182	168	155	144	135
F - 2	103	277	248	224	205	188	174	162	152
E - 1	114	308	276	249	228	209	194	181	169
F - 3	118	317	283	256	234	215	199	186	174
E - 2	129	346	310	280	256	236	218	203	190
D - 1	137	370	331	299	273	251	233	217	203
F - 4	137	370	331	299	273	251	233	217	203
E - 3	147	396	354	320	293	269	249	232	217
D - 2	154	416	372	337	307	283	262	244	228
C - 1	160	431	386	349	319	293	271	253	236
F - 5	165	443	397	359	328	302	279	260	243
E - 4	171	462	413	374	341	314	291	271	253
D - 3	176	475	425	385	351	323	299	278	261
C - 2	180	485	434	393	358	330	305	284	266
B - 1	183	493	441	399	364	335	310	289	270
A - 1	206	554	496	449	410	377	349	325	304
A - 2	231	624	558	505	461	424	393	366	342
B - 3	235	633	567	513	468	431	399	371	347
C - 4	240	647	579	523	478	440	407	379	355
D - 5	247	665	595	538	492	452	419	390	365
E - 6	257	693	620	561	512	471	436	406	380
A - 3	264	713	638	577	527	485	449	418	391
B - 4	274	739	661	598	546	503	465	433	405
C - 5	288	776	694	628	574	528	489	455	426
D - 6	308	831	744	673	615	565	523	487	456
A - 4	308	831	744	673	615	565	523	487	456
B - 5	329	887	793	718	655	603	558	520	486
C - 6	360	970	868	785	717	660	611	569	532
A - 5	370	998	893	808	737	678	628	585	547
B - 6	411	1109	992	897	819	754	698	650	608
A - 6	463	1247	1116	1010	922	848	785	731	684

Calculations

• Practical calculation for fertilizer dispensing

01 **-** Determine the spacing between lines and the amount of fertilizer to be distributed per bushel (Aa) or hectare (Ha).
02 **- Example:** Seeder with a spacing of 170 mm, to distribute 500 kg of fertilizer per Ha, use the formula below:

Formula: $X = \frac{E \times Q}{A} \times D$

WHERE:

E = Spacing between lines (mm)
Q = Amount of fertilizer to be distributed (kg)
A = Area to be fertilized (m^2)
D = 50 meters distance (test)
X = Fertilizer grams to 50 meters

Resolve: $X = \frac{170 \times 500}{10.000} \times 50$

$X = 8{,}5 \times 50 = 425$

X = 425 grams to 50 meters per line

NOTE

When obtaining the result, adjust the seeder to distribute the quantity found, or the one closest to the predetermined space for the test.

ATTENTION

Variation in working speed affects the uniform distribution of seeds.
When changing the seed lot or the fertilizer manufacturer, it is necessary to check again.
After the first day of planting, check all adjustments again.

▪ Calculations

• Practical test to measure the amount of fertilizer and seed dispensing

01 - For greater precision in the distribution of fertilizer or seed, make the quantity test to be distributed at the planting site, because for each land there is a condition.
02 - As far as possible, always use the same tractor and operator that will carry out the planting.
03 - Always check and maintain the correct tire inflation on the SKADI and Side Transport tires as instructed on page 78.
04 - Mark the test distance in the table, we chose 50 linear meters.
05 - Fill the seeder tanks at least halfway. Run an average of 10 meters outside the test area so that the fertilizer and seeds fill the batchers.
06 - Seal the exit of the seed nozzles and place containers for collection in the fertilizer outlets. Move the tractor in the demarcated area, always at the same speed you will plant, from 5 to 8 km/h or 3 to 5 MPH.
07 - After going through the marked space, remove the seal from the seed spout and collect them for counting and also collect the fertilizer to weigh the collected quantity. If necessary, increase or decrease the amount of seed and fertilizer to be distributed, check the table.
08 - When reaching the desired quantity, still in the area, move the tractor at the same speed, however, letting the fertilizer and seed reach the soil to check for uniformity in distribution later.

⚠ ATTENTION **We suggest that a practical test be carried out on the dispensing of the fertilizer and seed, over 50 m, to later compare the results of the fertilizer and the seed.**

▪ Planting lines

- Planting line models

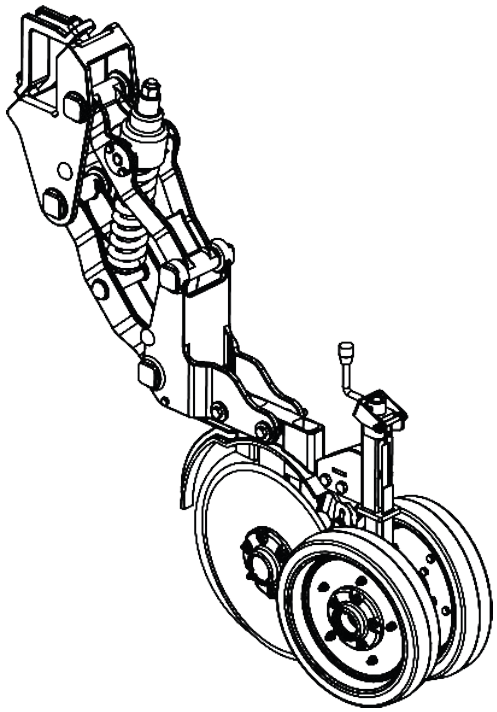

RIGHT LINE
W/ DOUBLE DISC FERTILIZER/SEED
W/ DEPTH REGULATOR

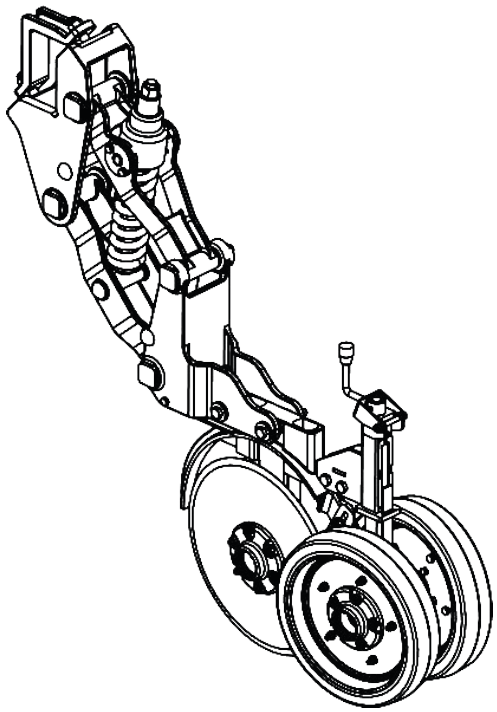

LEFT LINE
W/ DOUBLE DISC FERTILIZER/SEED
W/ DEPTH REGULATOR

▪ Adjusting the lines

• Line pressure regulation

The **SKADI** leaves the factory with pre-established line pressure regulation. If you need another adjustment to better adjust the lines (1) to the type of soil to be worked, proceed as follows:

Turn the nut (2) to the right (clockwise).

For more pressure on the spring (3).

Turn the nut (2) to the left (counterclockwise).

For less pressure on the spring (3).

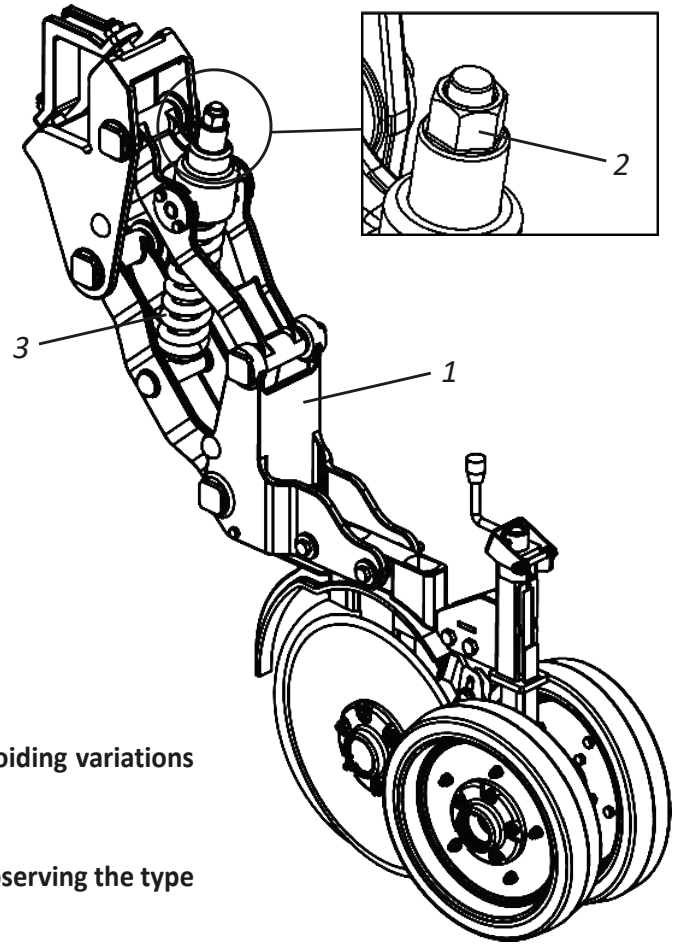

IMPORTANT | **When adjusting the pressure of one line, all the others must have the same adjustment, avoiding variations between the lines.**

OBSERVAÇÃO | **The pressure adjustment of the lines must be done in the field before starting the works observing the type of soil to be worked, to obtain a better performance of the seeder.**

Adjusting the lines

• Double disc cleaners adjustment

The double disc has cleaners that are flexible and adjustable to remove the dirt that sticks to the discs. To adjust the wipers, proceed as follows:

01 - Loosen the nut (1), adjust the wipers (2) in the ideal position and retighten the nut (1).

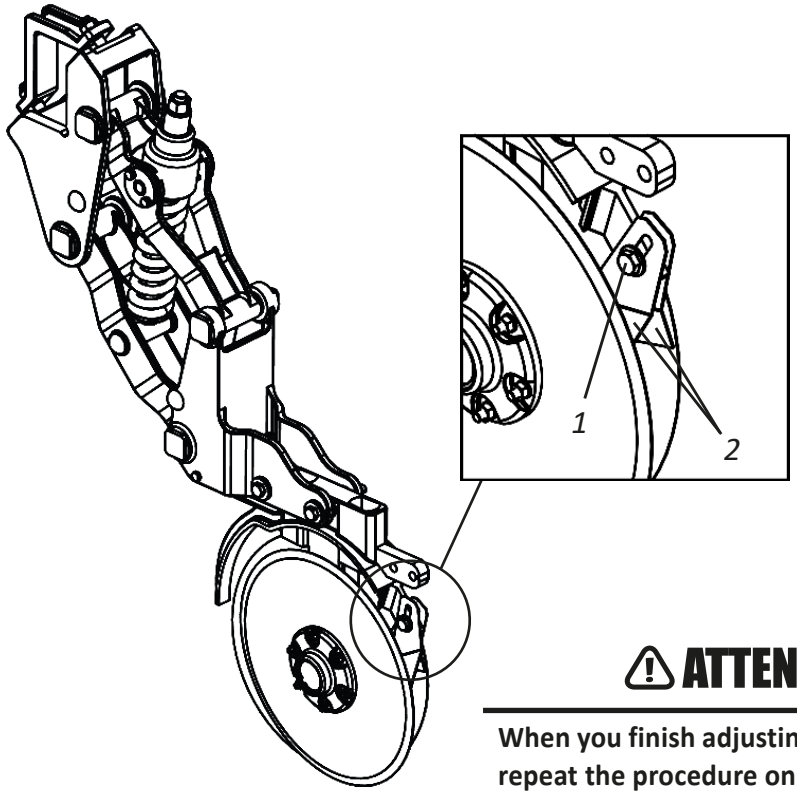

⚠ ATTENTION

When you finish adjusting the cleaners (1), repeat the procedure on all lines.

• Depth limiting wheel adjustment - Part I

The depth control of the seed is done individually by the depth limiting wheel (1). To adjust the depth stop wheel (1), proceed as follows:

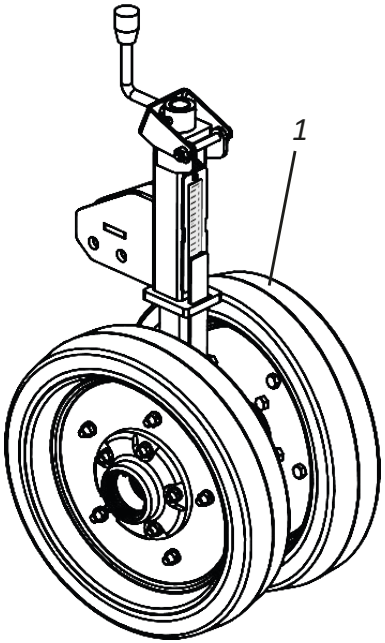

01 - Pull the lock (2) backwards, unlocking the crank (3).

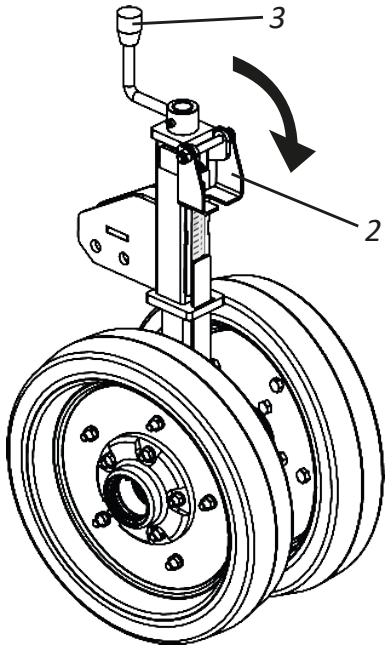

Adjusting the lines

• Depth limiting wheel adjustment - Part II

The depth control of the seed is done individually by the depth limiting wheel (1). To adjust the depth stop wheel (1), proceed as follows:

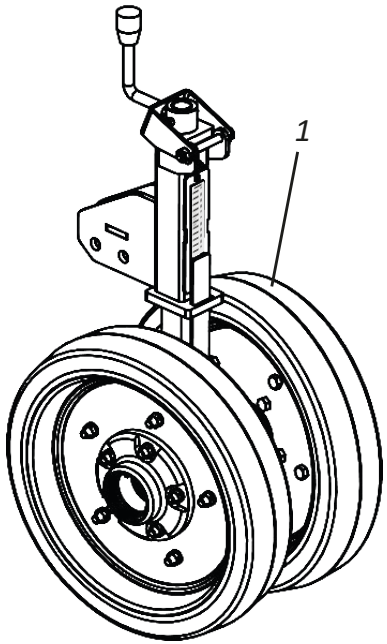

01 - Pull the lock (2) backwards, unlocking the crank (3).

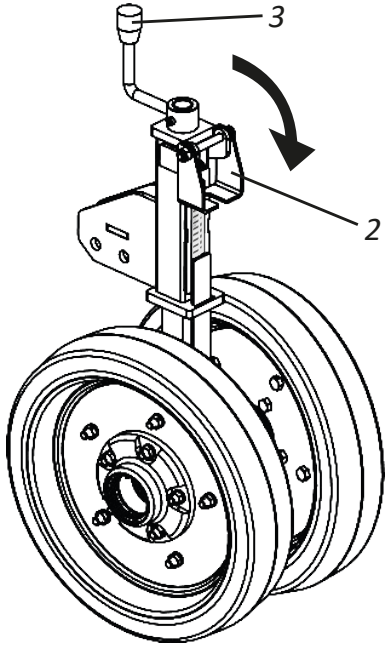

02 - Then, turn the crank (3) checking the scale (4) for the desired depth.

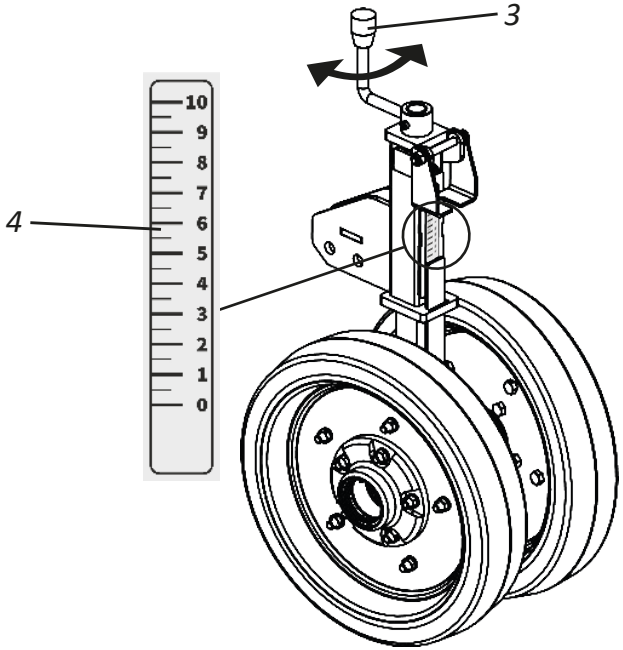

03 - Finish by pulling the lock (2) forward, locking the crank (3).

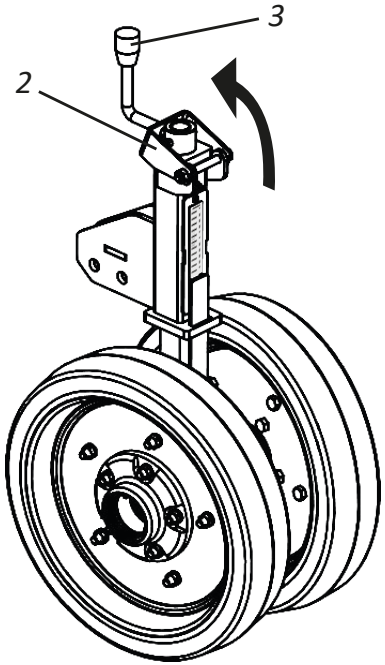

IMPORTANT

When adjusting the depth limiting wire in one of the lines, all the others must have the same adjustment avoiding variations between the lines.

▪ Adjusting the lines

• Adjusting the depth limiting wheel angle

The angle of the depth limiting wheels (1), has the purpose of pressing the ridge causing the soil to be immediately replaced on the seed, assisting in compaction through angular regulation, facilitating the germination and development of the plant.

01 - Pull the lever (2) upwards, move it by adjusting the depth limit wheel (1), then lower the lever (2), locking it.

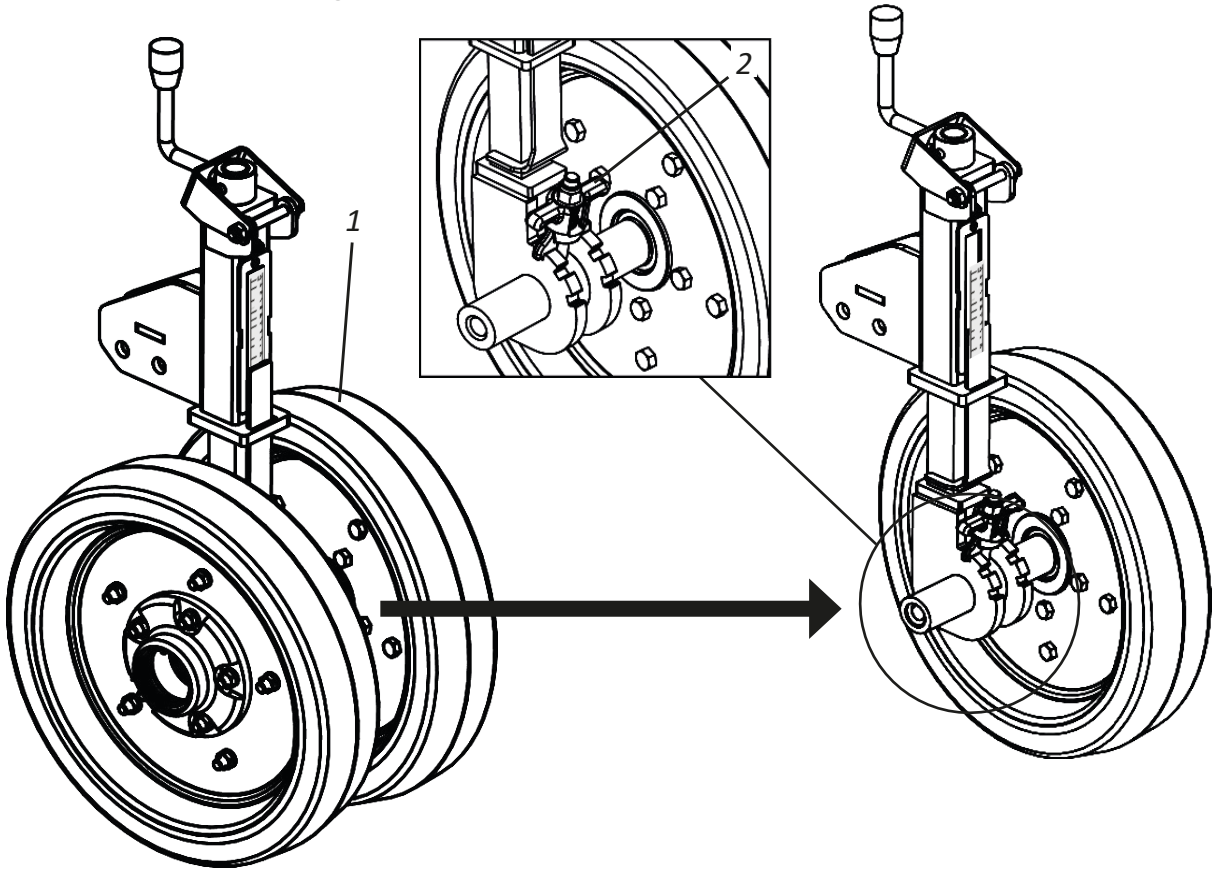

DEPTH LIMITING WHEEL ANGLE

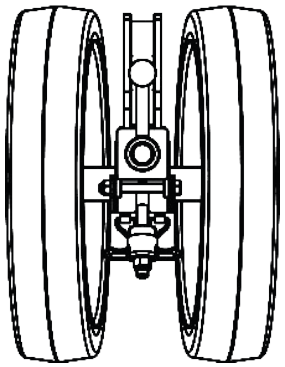

FULLY CLOSED ANGLE POSITION
LESS EARTH OVER THE SEED.

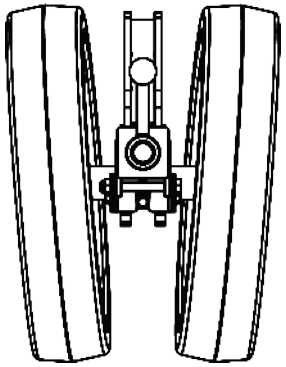

FULLY OPEN ANGLE POSITION
MORE EARTH OVER THE SEED.

❗ IMPORTANT

When finishing the adjustment, repeat the procedure on all lines avoiding the variation between them. Consider the type of soil, seed, and depth of planting so as not to affect the free emergence of the plants.

Operations

• Recommendations for operation

The preparation of the **SKADI** and the tractor will allow you to save time in addition to a better result in field work. The following suggestions may be helpful to you.

01 - After the first day of work with the **SKADI**, retighten all screws and nuts. Check the condition of the pins and locks.
02 - Do not maneuver or reverse with the lines lowered to the ground.
03 - Observe lubrication intervals.
04 - When filling the tanks make sure that there are no objects inside them, such as nuts, bolts, etc. Always use seeds free of impurities.
05 - Always observe the functioning of seed dispensing mechanisms and also the regulations established at the beginning of planting.
06 - Keep the **SKADI** level, the tractor drawbar must remain fixed and the working speed must remain constant.
07 - Always check seed depth and press wheel pressure.
08 - Note the position of the fertilizer in relation to the seed in the soil.
09 - Do not make sharp bends with **SKADI** during work, especially in no-till. Line components may be damaged.
10 - Do not partially activate the hydraulic cylinders. The drive for both raising and lowering the **SKADI** must always be complete.
11 - Do not disconnect any hose without first relieving circuit pressure. To do this, operate the control levers a few times with the engine off.
12 - After coupling and leveling, the next adjustments will be made directly on the work field, analyzing the terrain in terms of texture, humidity and the types of operations to be carried out with **SKADI**.
13 - Observe the working and transport speeds specified on page 11. We do not advise exceeding speeds to maintain service efficiency and avoid possible damage to the **SKADI**.
14 - When carrying out any checking or maintenance on the **SKADI**, it must be lowered to the ground and the tractor engine shut down.
15 - The **SKADI** has several adjustments but only local conditions can determine the best adjustment.
16 - Indications on the right and left side are made by looking at the **SKADI** from behind.
17 - Only fill the **SKADI** at the workplace.
18 - Do not transport or work with an overload on the **SKADI**.
19 - The **SKADI** operates with greater efficiency in the range of 5 to 8 km/h or 3 to 5 MPH.

In case of doubt, never operate or handle SKADI, consult Post Sales.
Telephone: 0800-152577 / E-mail: posvenda@baldan.com.br

Maintenance

• "Non-drinking" water tank

The **SKADI** has a "non-potable" water tank (1), located at the rear of the seeder. The "non-potable (1) water tank should only be used for general cleaning, and should not be ingested under any circumstances.

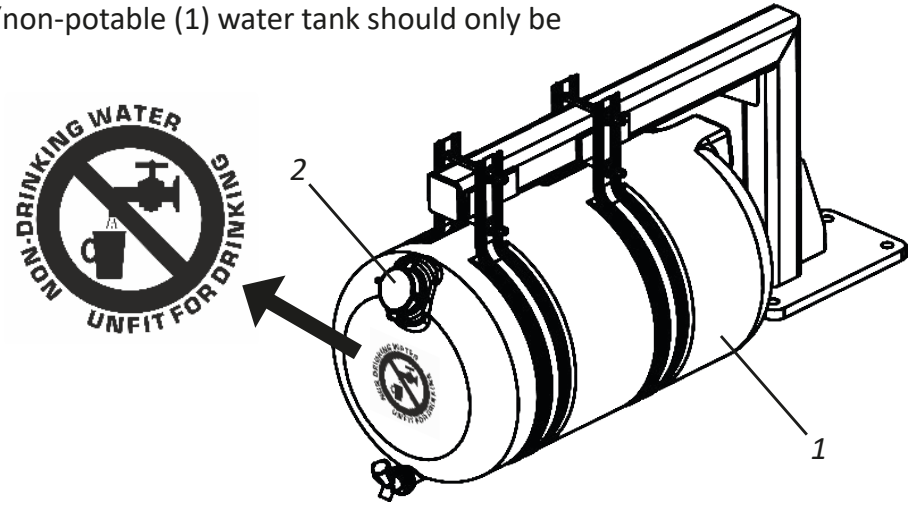

⚠ ATTENTION

Do not drink water from the tank as it is unfit for human consumption "Non-Drinking Water". Ignoring this warning could cause health risks.

NOTE

To fill the "non-potable" water tank (1), remove the cover (2).

• Tool box

The **SKADI** has a tool box (1) located at the rear of the seeder. The tool box (1) facilitates the loading of tools for maintaining the seeder.

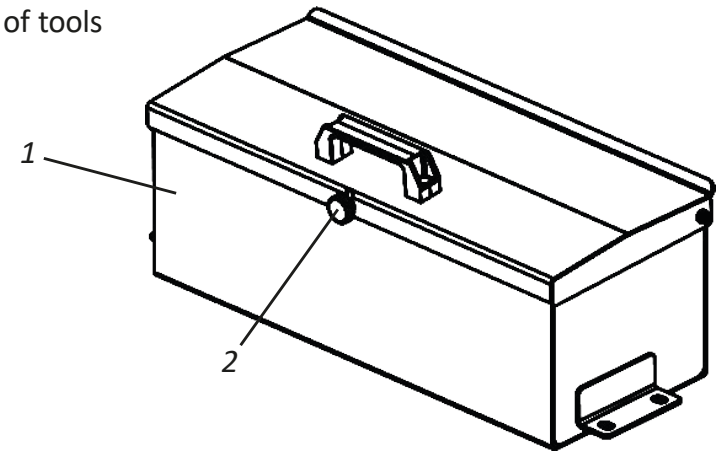

NOTE **To open the tool box (1), release the handle (2).**

▪ Maintenance

The **SKADI** was developed to provide you with maximum performance under terrain conditions. Experience has shown that periodic maintenance of certain parts of the **SKADI** is the best way to help you avoid problems, so we suggest checking.

• Tire pressure

Lubrication is essential for the good performance and durability of the **SKADI** moving parts, contributing to savings in maintenance costs.

Before starting the operation, carefully lubricate all grease fittings, always observing the greasing intervals on the following page. Make sure of the quality of the lubricant, its efficiency and purity, avoiding the use of products contaminated by water, soil and other agents.

SKADI 5000 AND 6000 (STANDARD)
SKADI 7000 - SIDE TRANSPORT

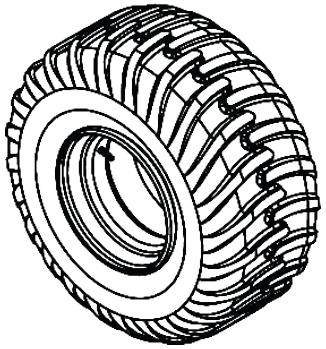

TIRES 400 X 60 14 PLIES
USE: 52 LBS/POL²

SKADI 7000 (STANDARD)

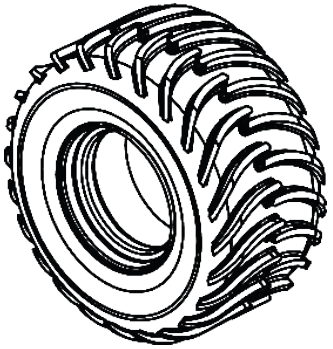

TIRES 500/60 - 22.5 16 PR TR-08 TL
USE: 48 LBS/POL²

SKADI 5000 AND 6000
SIDE TRANSPORT

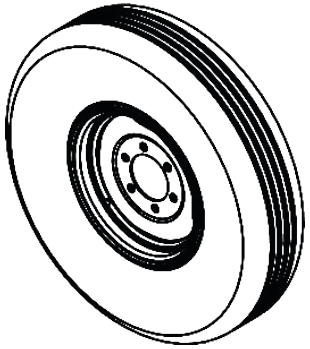

TIRES 900 X 16 10 PLIES
USE: 56 LBS/POL²

⚠ ATTENTION

Never weld the wheel with a mounted tire, as heat can increase air pressure and cause the tire to explode.
When inflating a tire, position yourself next to the tire, never in front of it.
To inflate the tire, use a containment device (filling cage).
Assemble the tires with suitable equipment. The service should be performed only by persons qualified for the job.

❗ IMPORTANT

When calibrating the tires, do not exceed the recommended calibration.

NOTE

Tractor tire pressure should be as recommended by the manufacturer.

▪ Maintenance

• Lubrication

Lubrication is essential for the good performance and durability of the **SKADI** moving parts, contributing to savings in maintenance costs.

Before starting the operation, carefully lubricate all grease fittings, always observing the greasing intervals on the following page. Make sure of the quality of the lubricant, its efficiency and purity, avoiding the use of products contaminated by water, soil and other agents.

• Table of greases and equivalents

Manufacturer	Recommended grease types
Petrobrás	Lubrax GMA-2
Atlantic	Litholine MP 2
Ipiranga	Ipiflex 2
Castrol	LM 2
Mobil	Grease MP
Texaco	Marfak 2
Shell	Alvania EP 2
Esso	Multi H
Bardahl	Maxlub APG-2EP
Valvoline	Palladium MP-2
Petronas	Tutela Jota MP 2 EP
	Tutela Alfa 2K
	Tutela KP 2K

⚠ ATTENTION

For manufacturers and or equivalent brands not listed in the table, see the manufacturer's technical manual.

• Lubrication every 10 hours of work - Part I

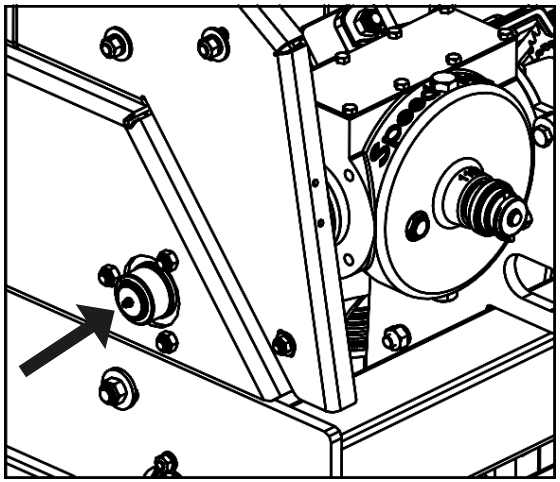

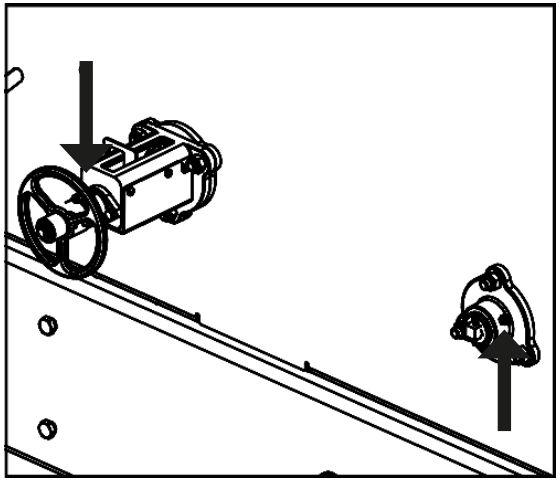

⚠ ATTENTION

When lubricating SKADI, do not exceed the amount of new grease. Insert a sufficient amount.

▪ Maintenance

• Lubrication every 10 hours of work - Part II

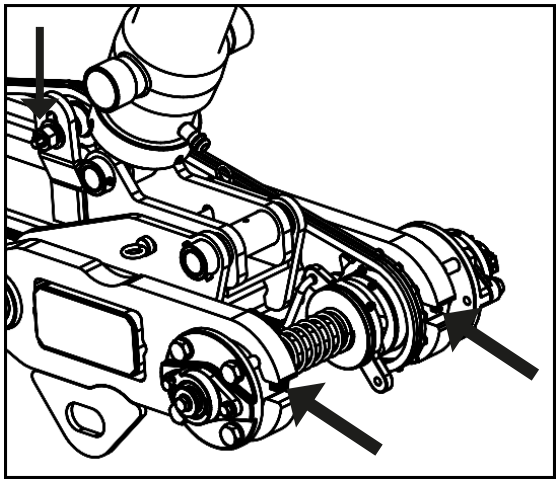

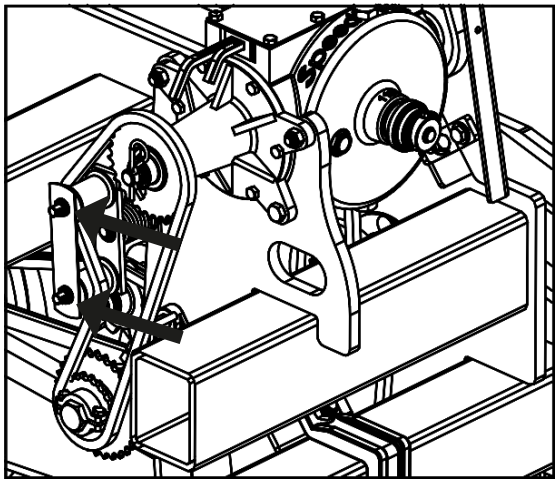

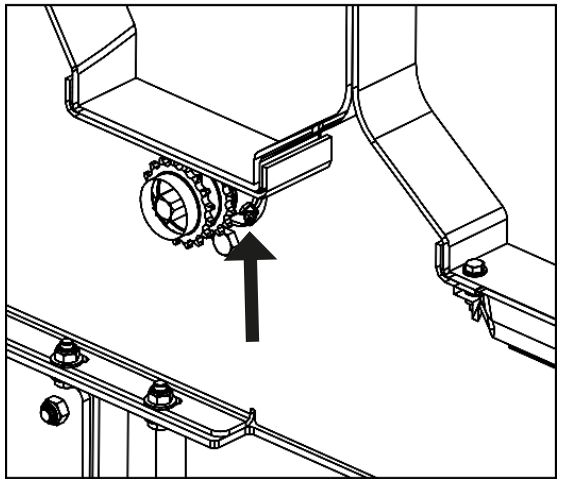

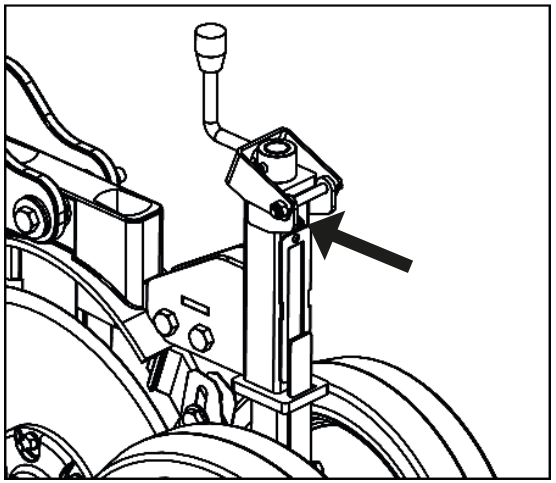

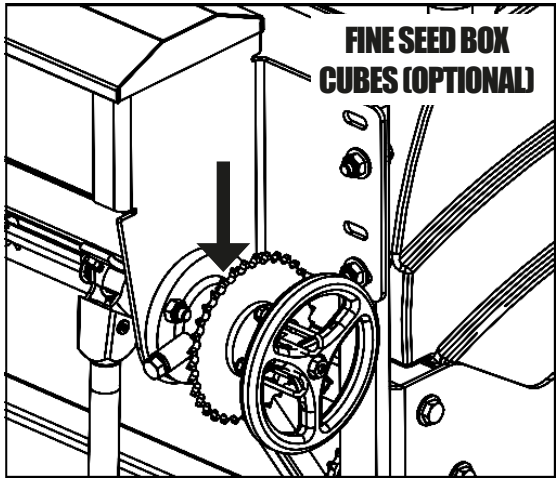

⚠ ATTENTION

When lubricating SKADI, do not exceed the amount of new grease. Insert a sufficient amount.

Maintenance

• Lubrication every 10 working hours - Part III

To lubricate the hub of the line markers (1), proceed as follows:

01 - Remove the retaining ring (2) from the hub (3). Check the bearings, if there are gaps, adjust through the castle nut (4). Insert new grease into the cap (5). Replace the hub cap (5) on the hub and secure it with the retaining ring (2).

FRONT LINE MARKER CUBES (OPTIONAL)

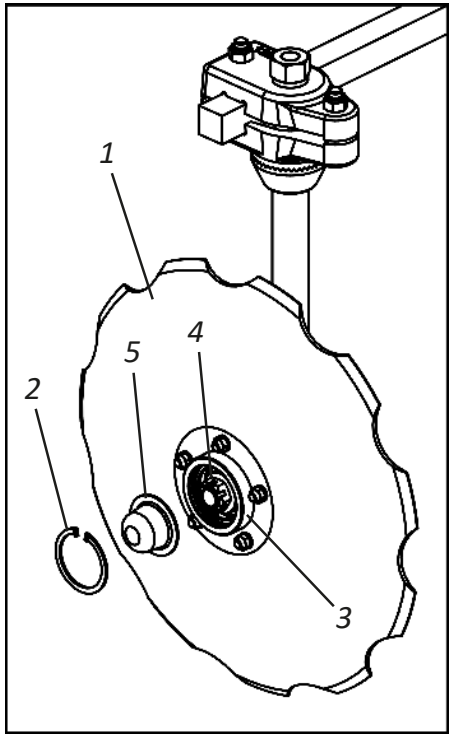

⚠ ATTENTION

Before removing the cap (5), clean the outside to avoid contaminating the inside.
When lubricating SKADI, do not exceed the amount of new grease. Insert a sufficient amount.

• Lubrication every 30 hours of work

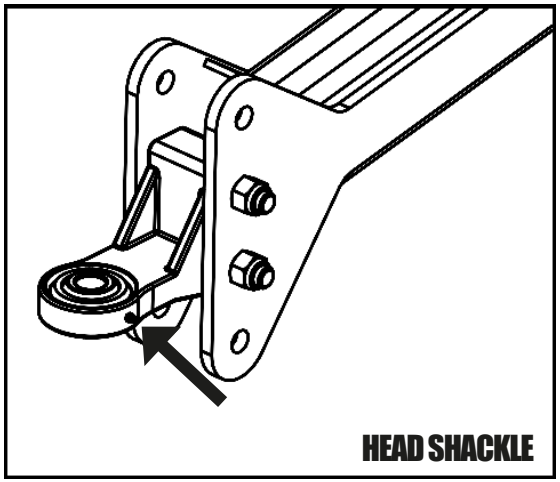

HEAD SHACKLE

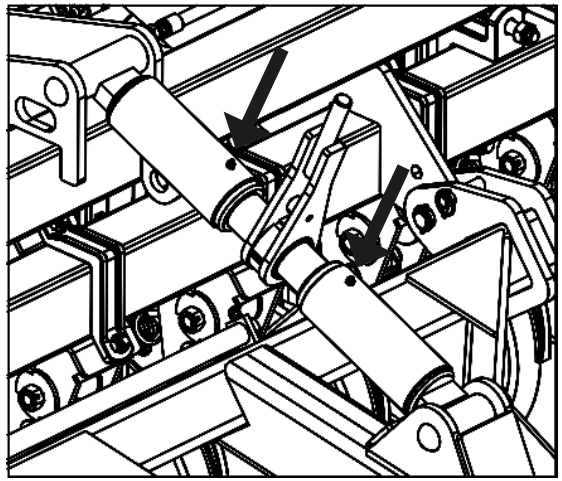

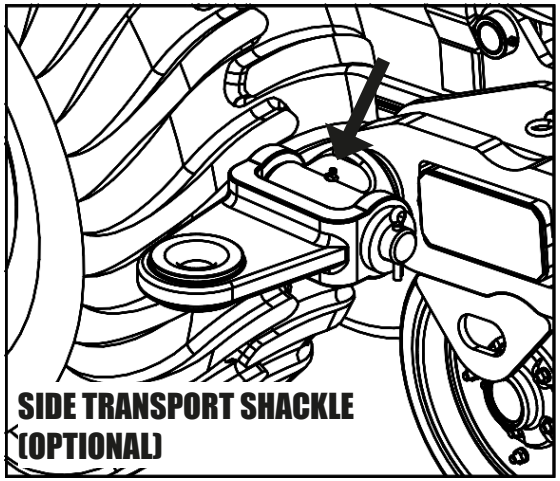

SIDE TRANSPORT SHACKLE (OPTIONAL)

⚠ ATTENTION

When lubricating SKADI, do not exceed the amount of new grease. Insert a sufficient amount.

▪ Maintenance

• Lubrication every 60 hours of work

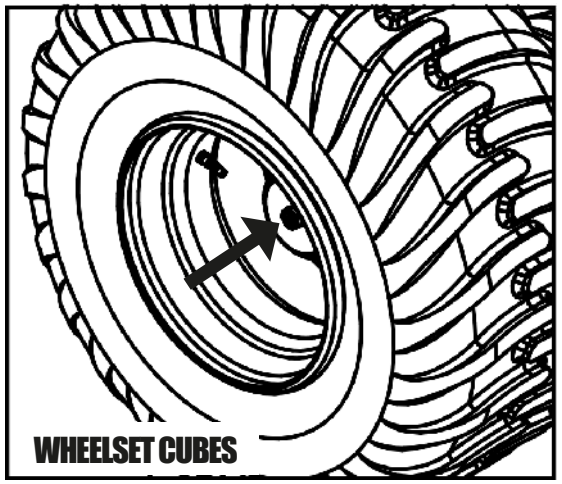

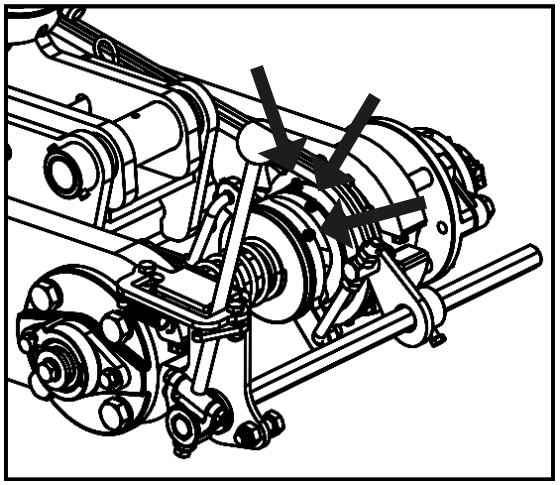

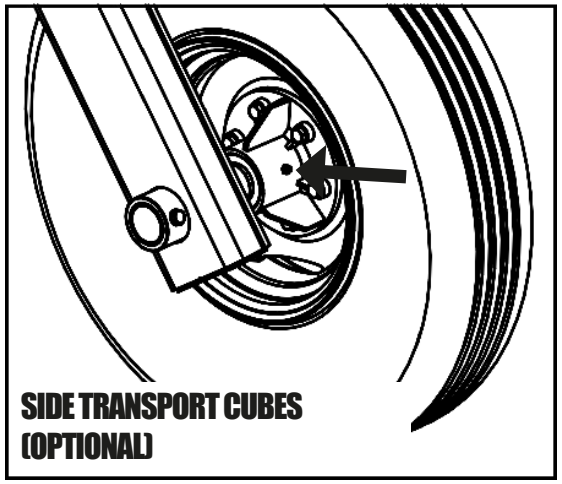

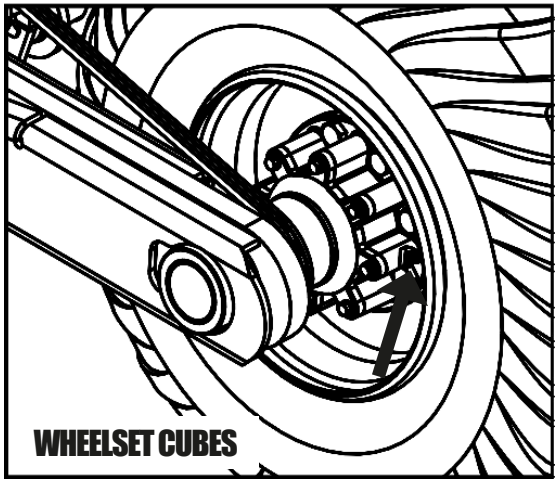

⚠ ATTENTION

When lubricating SKADI, do not exceed the amount of new grease. Insert a sufficient amount.

Maintenance

• Chain tension

To tension the chain, proceed as follows:

01 - Loosen the nuts (1), slide the tensioners (2) adjusting the chain tension (3).

02 - Then retighten the nuts (1).

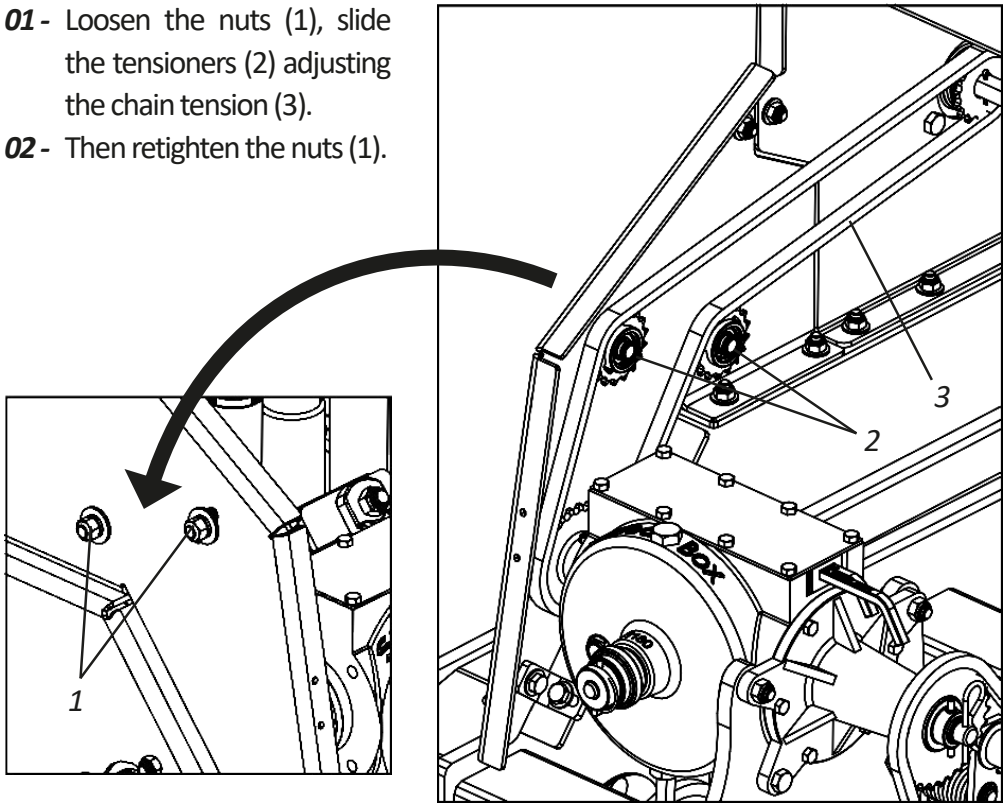

⚠ ATTENTION Check chain tension daily, normal clearance should be + - 1 cm in the center of the chains.

• Oscillating tensioner

The tensioner (1) is equipped with a torsion spring (2) for greater flexibility. If more pressure is needed on the tensioner, loosen its inner nut (3), turn the shaft (4) passing the spring coupling (2) to the other tooth of the shaft socket and retighten the inner nut (3) again.

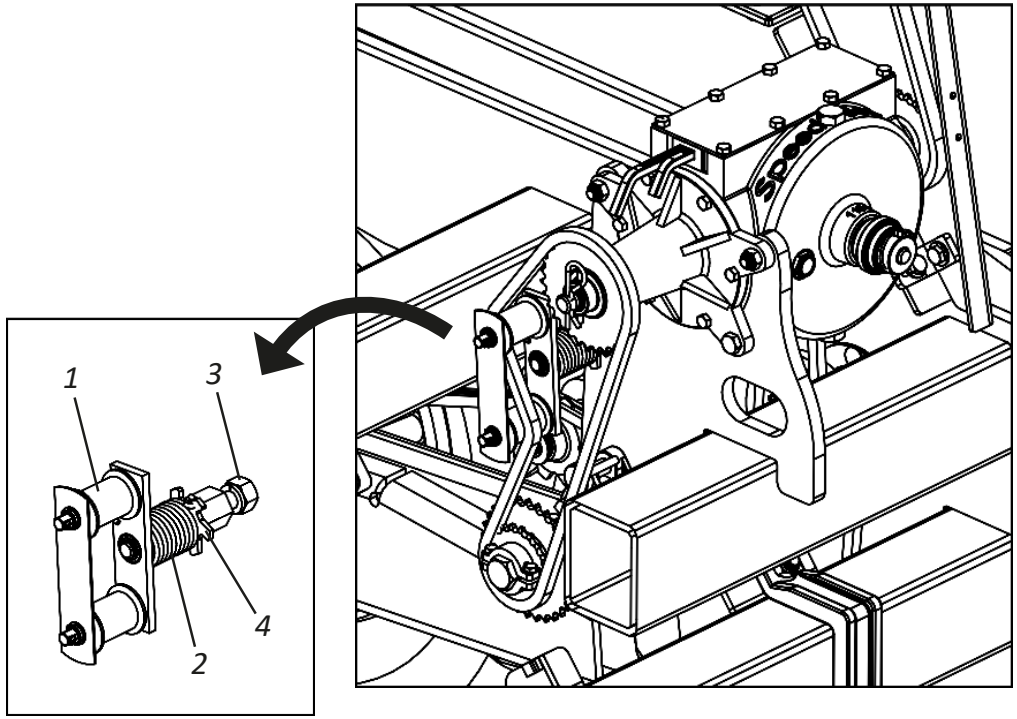

⚠ ATTENTION Check chain tension daily, normal clearance should be + - 1 cm in the center of the chains.

▪ Maintenance

• Operational maintenance - Part I

PROBLEMS	PROBABLE CAUSES	SOLUTIONS
During planting, fertilizer starts to leak through the safety exits.	Clogged hoses or pieces of plastic in the conductive fertilizer coils.	Unclog the hose or remove the upper channel that gives access to the spiral, rotate the shaft in the opposite direction until the foreign body that is stuck loosens.
Fertilizer hub shaft does not rotate.	Spiral blocked by wet fertilizer or excess fertilizer in the closed line.	Unclog the spirals, check if you have a loose gutter and the fertilizer may be entering by their sides.
One planting line is less shallow than the other.	Different pressure settings on the depth limiting wheels or line springs.	Adjust all wheels of equal depth and the pressure of the line springs.
The ridge is too open during planting.	Sticky soil that sticks to the discs or excessive work speed.	Decreases work speed.
Strange noise when operating or moving with a loaded seeder.	Loose wheels or wheel hub.	Re-tighten the wheel nuts. Adjust the wheel hub bearings.
The seeder leaves the planting line or on one side, sometimes on the other side in width.	Tractor drawbar loose.	Use the pin that comes with the seeder. Secure the tractor drawbar in the center hole.
It is not covering the ridge.	Poorly adjusted covering wheels or damp grounds.	Adjust the covering wheel by moving it sideways in relation to the ridge.
The hydraulic cylinders stop operating, raise the seeder and then do not lower or vice versa.	Different quick coupling, ball-type male and needle-type female or vice versa.	Proceed by changing the quick coupler, placing two of the same type.
Broken seeds.	High planting speed.	Decrease work speed.
	Inadequate disc thickness.	Use suitable disc (hole thickness and diameter).
	Poorly placed disc.The seed sieve is not suitable for the disc used.	Insert the disc properly (note the sentence: **THIS SIDE DOWN**).
	Using moist seeds.	Using dry seeds.

Maintenance

• Operational maintenance - Part II

PROBLEMS	PROBABLE CAUSES	SOLUTIONS
Damaged tires.	Work area with stones, stumps, or crop remains with stems that causes cuts to the tires.	Eliminate the elements that cause damage to the tires before the **SKADI's** period of use.
	Tires are not under the proper pressure causing deformation.	Maintain proper tire pressure.
Strange noise on wheels.	Loose wheels or wheel set.	Retighten wheel nuts and adjust wheel hub bearings.
	Bearings breakage.	IIdentify the occurrence and replace the damaged parts.
Quick coupling does not fit.	Couplings of different types.	Exchange them for males and females of the same type.
Leak in hydraulic hoses.	Thread sealing material is missing.	Use thread sealant and retighten carefully.
	Insufficient tightening.	Retighten carefully.
	Damaged repairs.	Replace terminals.
Leak in quick couplers.	Insufficient tightening.	Retighten carefully without excess.
	Damaged repairs.	Replace repairs.
Quick couplings do not couple.	Couplings of different brands.	Use couplings of the same brand.
	Mixture of needle couplings with ball couplings.	Always use couplings of the same type.
	System pressure.	Relieve pressure to couple.

Maintenance

• Maintenance of the seed batcher

The **SKADI** is equipped with a seed batcher (1). After planting, do not leave seed in the tank; to clean the tank or maintain the seed batcher (1), proceed as follows:

01 - Close the seed outlet by completely moving the cover (2) of the seed batcher (1).

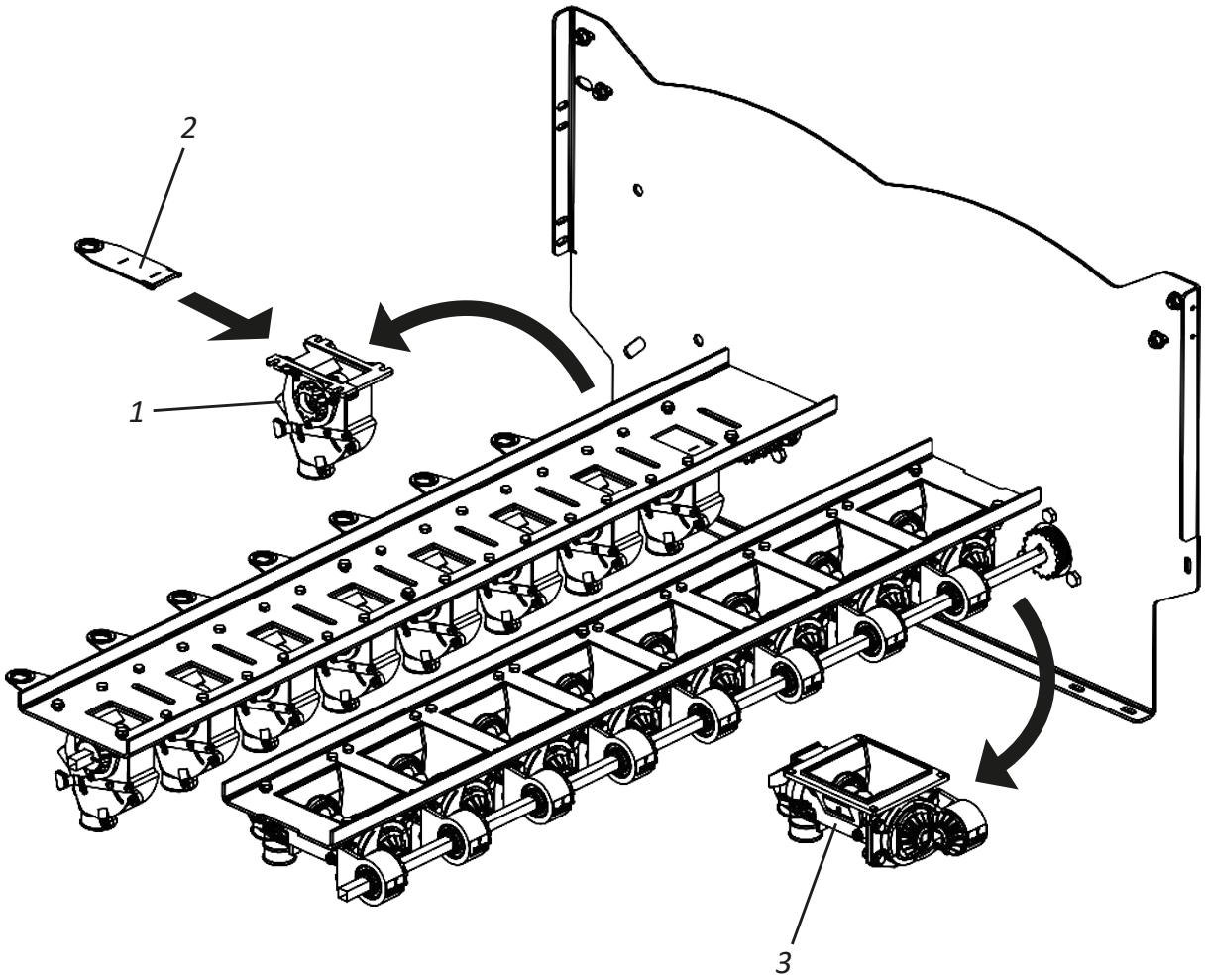

⚠ ATTENTION

To maintain or clean the Fertisystem conductor (3), proceed according to the instructions on pages 87 and 88.

❗ IMPORTANT

Close all seed outlets when cleaning the tank. Close the seed outlets individually when servicing the seed batcher (1).

▪ Maintenance

• Conductor fixation tube Fertisystem

The **SKADI** comes with a fixing tube (1) for cleaning or changing the endless spring. After planting, do not leave fertilizer in the deposit; to do the cleaning, proceed as follows:

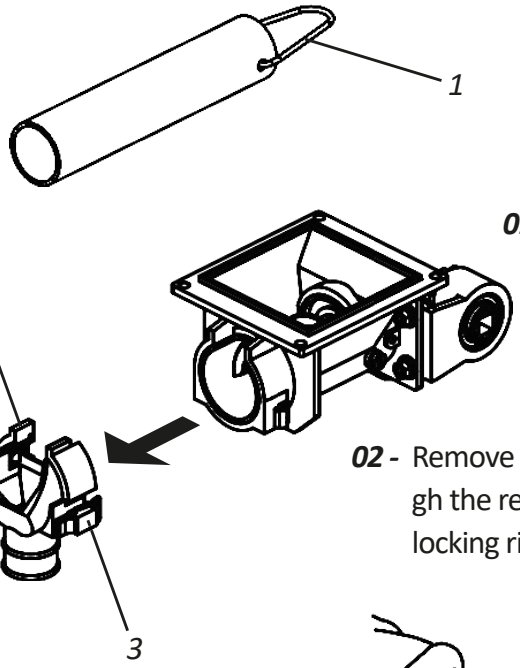

01 - Remove the nozzle (2) through the quick coupler (3).

02 - Remove the worm spring (4) by pulling it through the retaining tube ring (1) and removing the locking ring (5).

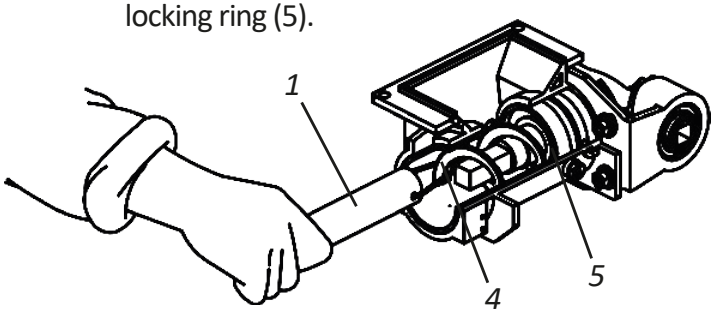

03 - After cleaning, replace the worm spring (4), together with the locking ring (6), through the fixing tube (1), making sure that the worm spring (4) and the locking ring (6) are well positioned at the base of the drive shaft (7).

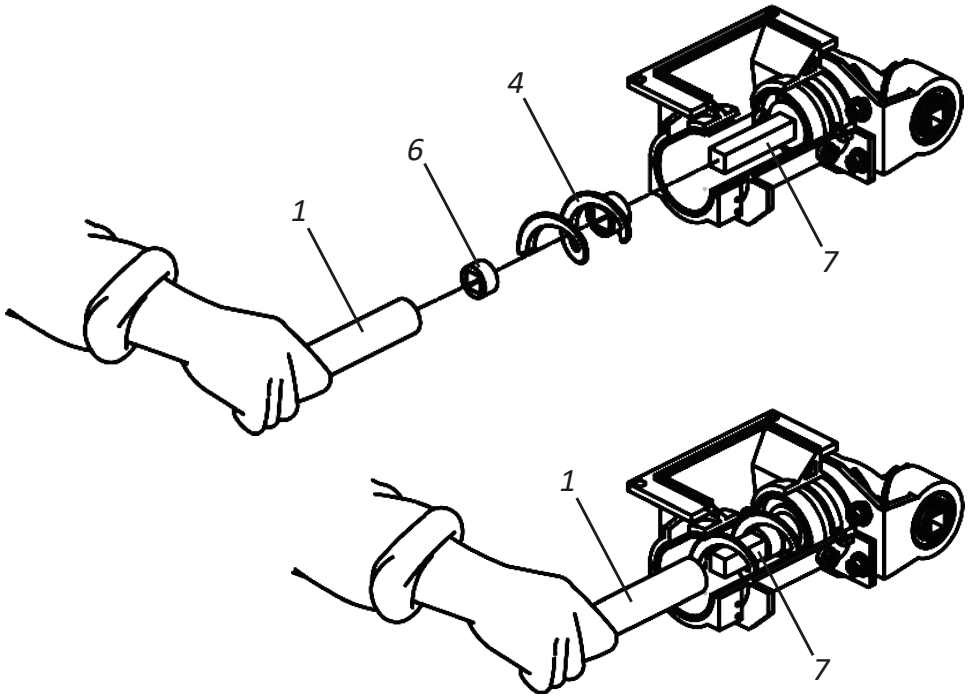

⚠ ATTENTION **Keep the worm spring in place with the locking ring. This procedure will prevent damage to the transverse lid when not using the batcher with fertilizer or when transporting the seeder. Failure of the locking ring can lead to damage of the fertilizer dispensing and/or transmission of the seeder.**

Maintenance

• Fertisystem conductor maintenance tube

The **SKADI** comes with a maintenance tube (1) to perform maintenance or change the endless spring without the need to remove the fertilizer from the box.

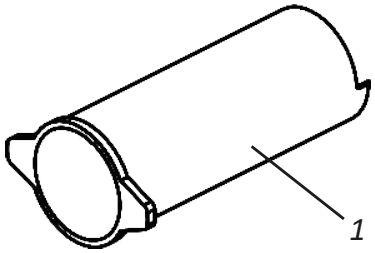

To service the Fertisystem conductor, proceed as follows:

01 **-** Remove the discharge nozzle (2) from the Fertisystem conductor (3) by releasing the quick locks (4).

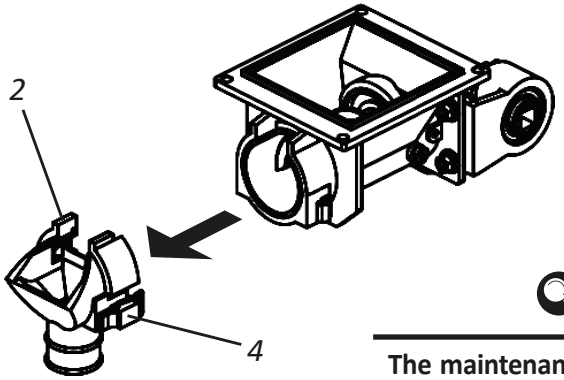

NOTE

The maintenance tube (1) has an end cut angle to facilitate this operation.

02 **-** Then, introduce the maintenance tube (1) in rotating movements, promoting the displacement of the fertilizer to the bottom of the batcher. Then perform the necessary maintenance.

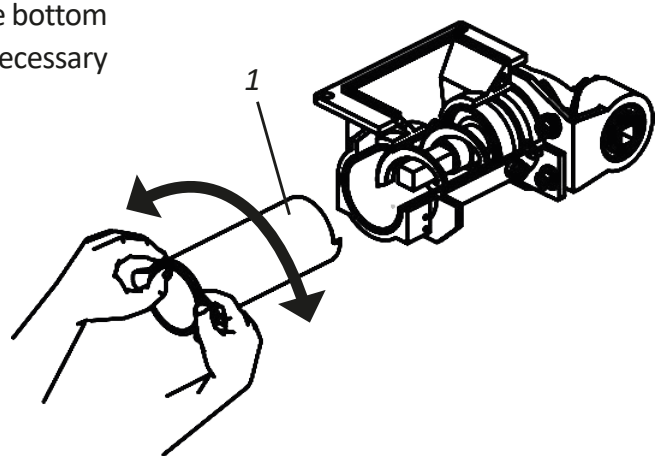

• Spring step 3/4”- Conductor Fertisystem

The **SKADI** leaves the factory with an endless spring step 1 “mounted on the Fertisystem conductor, however, in the packaging box that comes with the **SKADI**, the endless spring step **3/4”** is sent if you want to change the Fertisystem conductor to distribute less fertilizer.

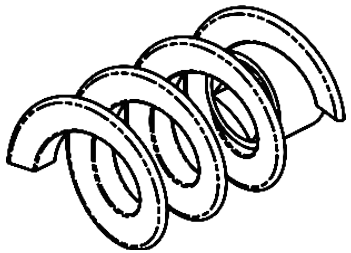

WORM SPRING (STEP 3/4”)

NOTE

Always fill the fertilizer tank at the work location. Avoid any kind of impurity in the fertilizer deposit. Carry out a measurement of dosage daily.

Maintenance

• Changing the tires SKADI 5000 and 6000 - Part I

If necessary, change or repair the tires for this, proceed as follows:

01 - First, support the **SKADI 5000** and **6000** at the rear by removing the rear support brackets (1) from the upright (2), placing them in the vertical position fixing with the pins (3) and locks (4).

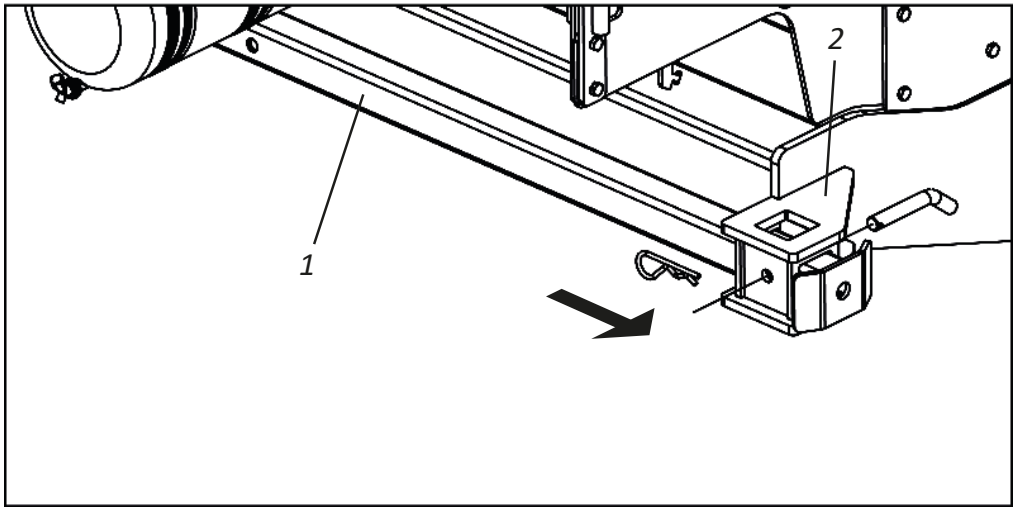

02 - Then, support the **SKADI 5000** and **6000** on the front by lowering the front support brackets (5) fixing them with the pins (6) and locks (7).

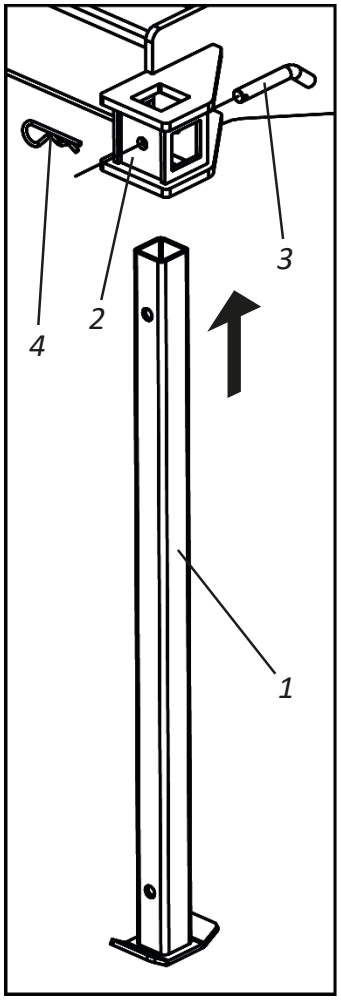

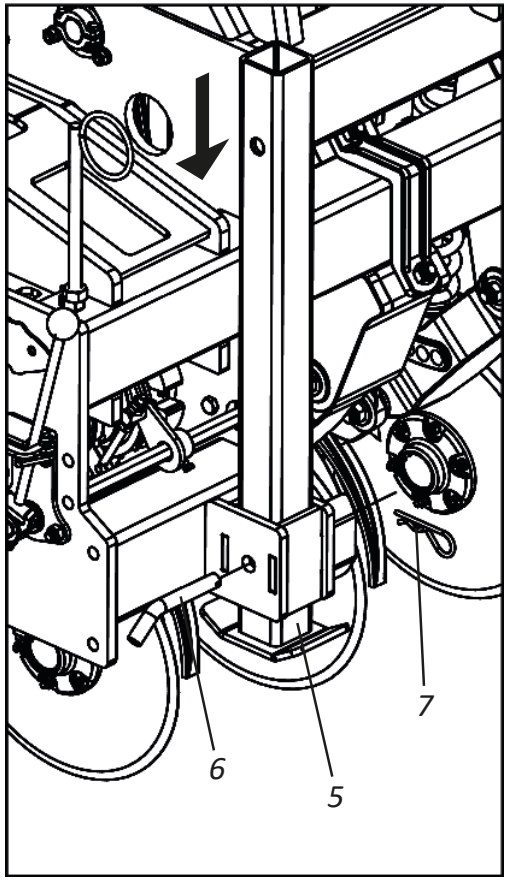

Maintenance

• Changing the tires SKADI 5000 and 6000 - Part II

03 - Then, fully retract the hydraulic cylinder (8) by suspending the tire (9) from the ground.

04 - Then, loosen screw (10), nuts and locknuts (11), remove the tire (9) from the hub (12) and make the change or repair.

05 - At the end of changing the tire (9), activate the hydraulic cylinder (8) by lowering the tire (9) to the ground to lift the **SKADI 5000** and **6000** and collect the rear support brackets (1) and front (5).

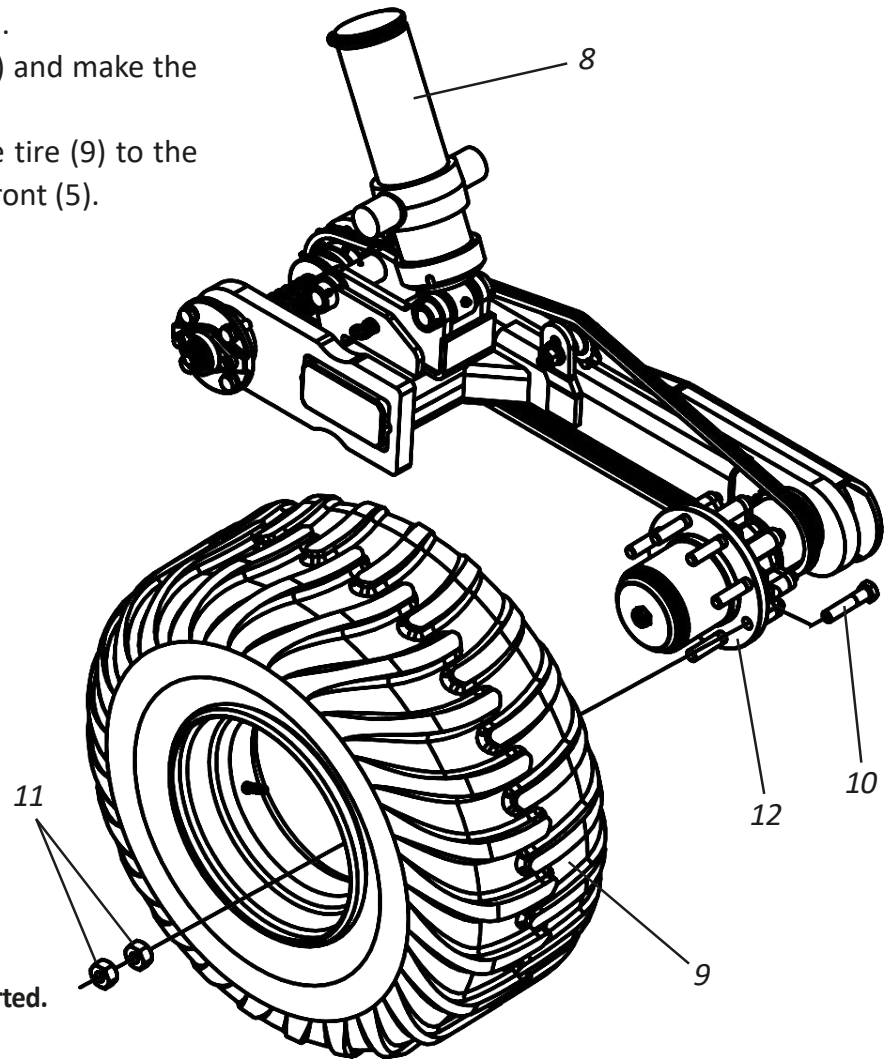

⚠ ATTENTION **Before changing or repairing the tire, make sure that the SKADI is properly supported. Failure to do so can cause damage, serious accidents or even death.**

Maintenance

• Changing the tires SKADI 7000 - Part I

If necessary, change or repair the tires for this, proceed as follows:

01 - First, support the **SKADI 7000** at the rear by removing the rear support brackets (1) from the upright (2), placing them in the vertical position fixing with the pins (3) and locks (4).

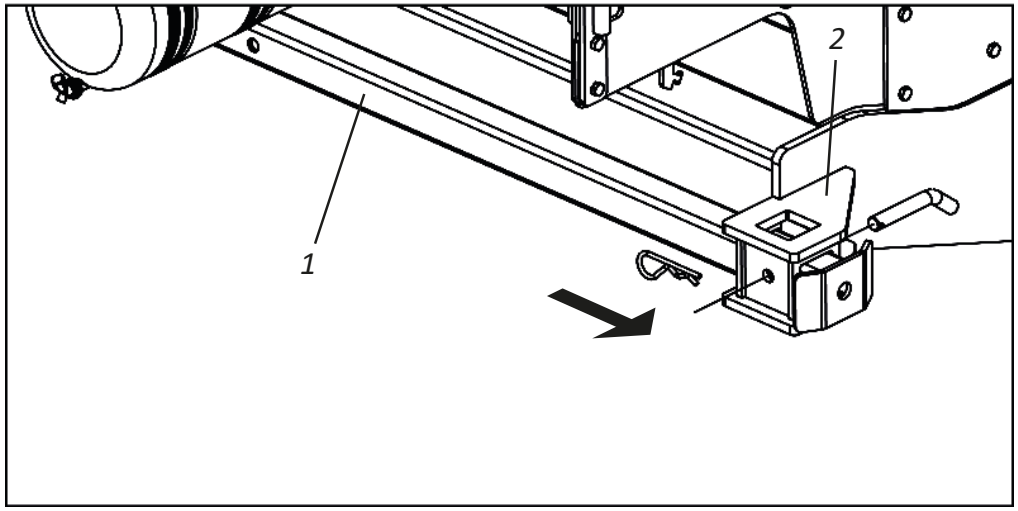

02 - Then, support the **SKADI 7000** on the front by lowering the front support brackets (5) fixing them with the pins (6) and locks (7).

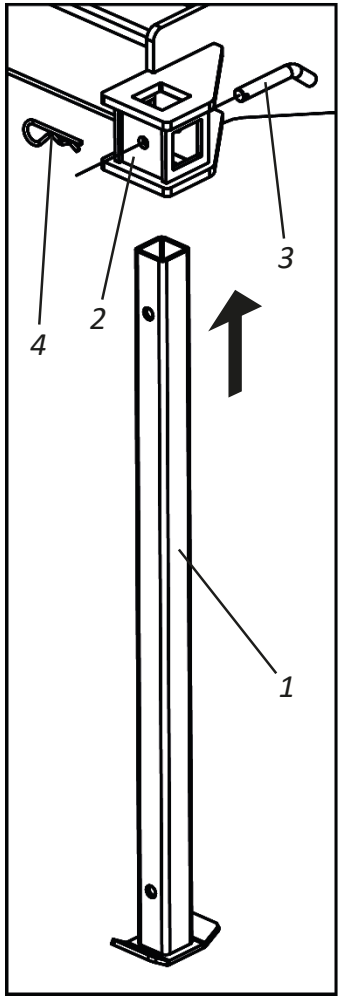

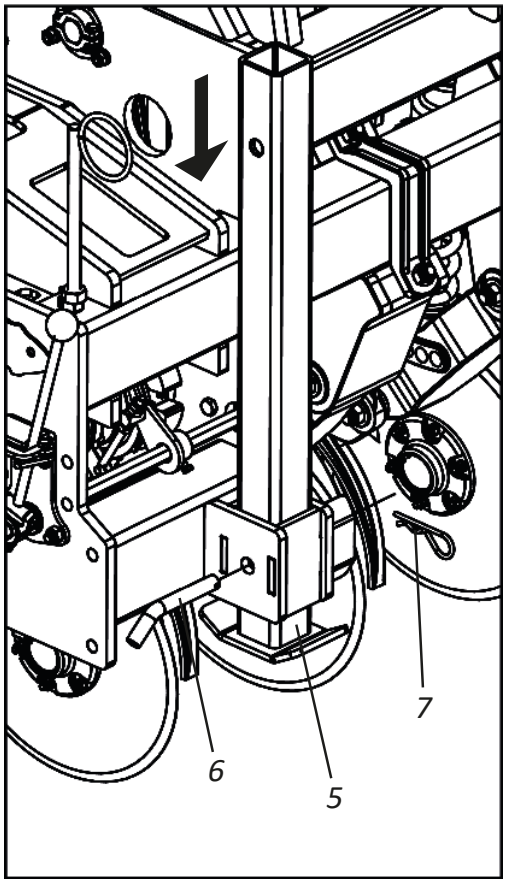

Maintenance

• Changing the tires SKADI 7000 - Part II

03 - Then, fully retract the hydraulic cylinder (8) by suspending the tire (9) from the ground and release the chain (10).

04 - Then, loosen the nuts (11), bushings (12) and remove the tire (9) from the support (13).

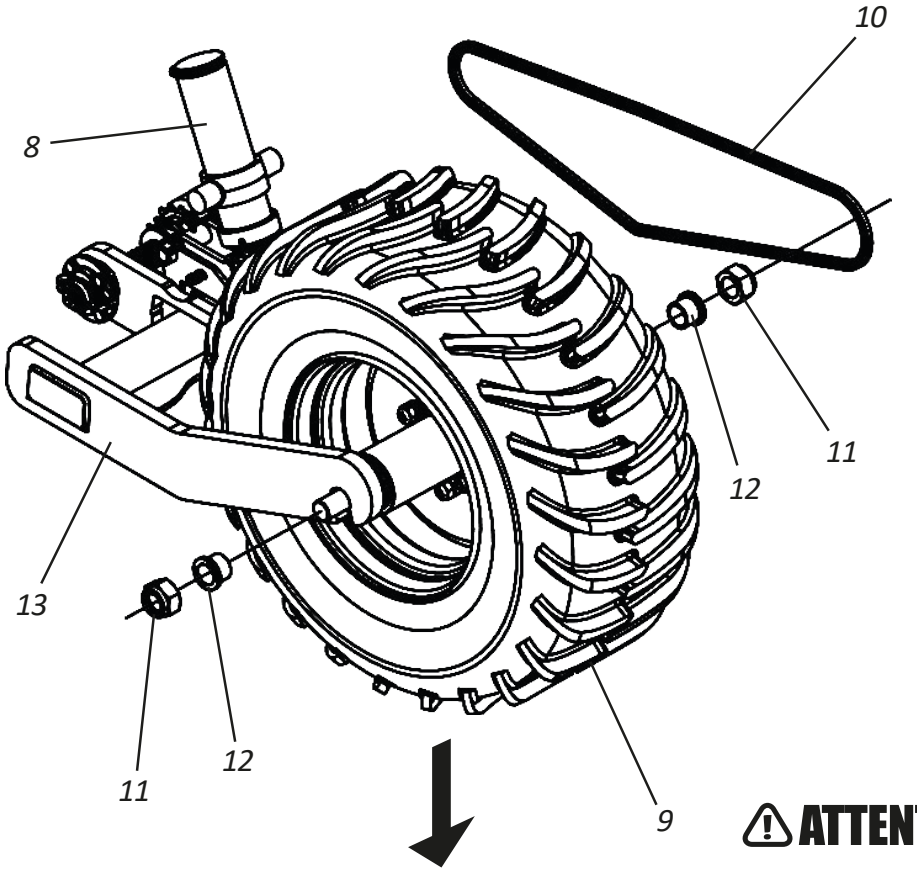

05 - Then, loosen the screws (14), nuts and locknuts (15), remove the tire (9) from the hub (16) and make the exchange or repair.

06 - When finishing the replacement or repair of the tire (9), activate the hydraulic cylinder (8) by lowering the tire (9) to the ground to raise the **SKADI 7000** and collect the rear (1) and front (5) support supports.

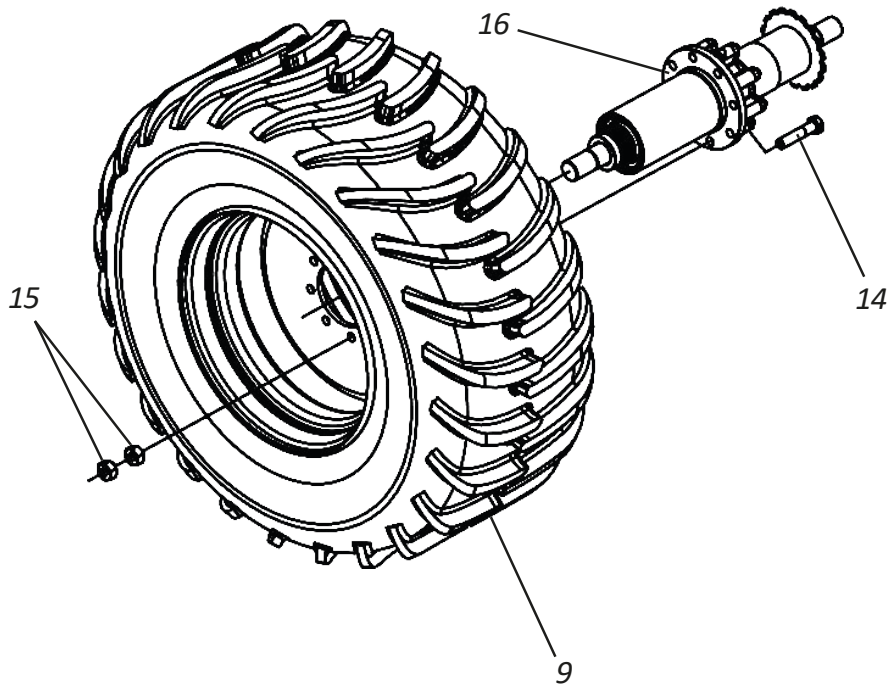

⚠ ATTENTION **Before changing or repairing the tire, make sure that the SKADI is properly supported. Failure to do so can cause damage, serious accidents or even death.**

▪ Maintenance

• Care

01 - Before each work, check the condition of all hoses, pins, screws, and discs. When necessary, retighten or replace them.
02 - Travel speed must be carefully controlled according to terrain conditions.
03 - The **SKADI** is used in several applications, requiring knowledge and attention during its handling.
04 - Only local conditions will be able to determine the best form to operate the **SKADI**.
05 - When assembling or disassembling any part of the **SKADI**, use suitable methods and tools.
06 - Carefully observe the lubrication intervals at the various **SKADI** lubrication points. Observe the lubrication intervals.
07 - Always check if the parts are worn. If replacement is required, always require original Baldan parts.
08 - Keep the **SKADI** and Side Transport tires always calibrated.
09 - Keep the **SKADI** discs sharp.

IMPORTANT | **Proper and periodic maintenance is necessary to ensure SKADI's long life.**

• Care during planting

01 - The fertilizer has great moisture absorption power and this speeds up the oxidation process, so avoid spillage and accumulation of fertilizer while loading the **SKADI**.
02 - Use a blower, compressed air or broom to remove excess fertilizers from the seeder at the end of the day.
03 - To avoid fertilizer effects, protect **SKADI** by storing it in the shed or covering it with canvas (in the best possible way) during rain and/or night periods, to protect it from moisture.

▪ Maintenance

• General cleaning

01 - Before storing the **SKADI**, perform a general cleaning and wash it thoroughly with water only. Check that the paint has not worn out, if this has happened, apply a general coat, apply protective oil, and lubricate **SKADI** completely. Do not use burnt oil or other abrasive.

02 - At the end of planting, proceed as follows:a:

- Remove the transmission chains and keep them bathed in oil until the next planting.
- Remove the hoses by immediately washing them with mild soap and water. Do not use other chemicals.
- Remove the regulator and articulate the head upwards, locking it.

03 - Lubricate the **SKADI** completely. Check all the moving parts of the **SKADI**, if they show wear or looseness, make the necessary adjustment or replacement of the parts, leaving the seeder ready for the next work.

04 - After all maintenance work, store the seeder in a covered, dry place, properly supported.

Avoid:- The discs from directly contacting the ground.
- Springs compression.
- That the hydraulic hoses are properly plugged.

05 - When connecting or disconnecting hydraulic hoses, do not let the ends touch the ground. Before connecting the hydraulic hoses, clean the connections with a clean cloth without loose threads. Do not use tow!

06 - Replace all stickers that are damaged or missing, especially warnings. Make everyone aware of their importance and the dangers of accidents when instructions are not followed.

07 - After all maintenance care, store your **SKADI** on a flat surface, covered and dry, away from animals and children.

08 - Make sure that the tanks are properly capped.

09 - We recommend washing the **SKADI** only with water at the beginning of the work.

⚠ ATTENTION | **Do not use chemicals or abrasives to wash SKADI, as this may damage the paint and adhesives on it.**

• Seeder conservation - Part I

To extend the **SKADI's** life and appearance for longer, follow the instructions below:

01 - Fertilizers and their additives are highly corrosive and their formulation is increasingly aggressive to the seeder components.

02 - Wash and clean all the components of the seeder during and at the end of the work season.

03 - Use neutral products to clean the seeder, following the safety and handling guidelines provided by the manufacturer.

04 - Always perform maintenance at the times indicated in this manual.

Maintenance

• Seeder conservation - Part II

The practices and care below if adopted by the owner or operator make a difference for SKADI conservation.

01 - Caution when performing high pressure washing; do not direct the water jet directly at the connectors and electrical components. Insulate all electrical components;

02 - Use only water and NEUTRAL detergent (pH 7);

03 - Apply the product, following the manufacturer's instructions, on the wet surface and in the correct sequence, respecting the application and washing time;

04 - Stains and dirt not removed with the products should be removed with a sponge.

05 - Rinse the machine with clean water to remove all chemical residues.

06 - Não utilize:

- Detergents with basic active principle (pH greater than 7), they can damage/stain the seeder paint.

- Detergents with acid active principle (pH less than 7) act as a paint remover/zinc plating (the protection of parts against oxidation).

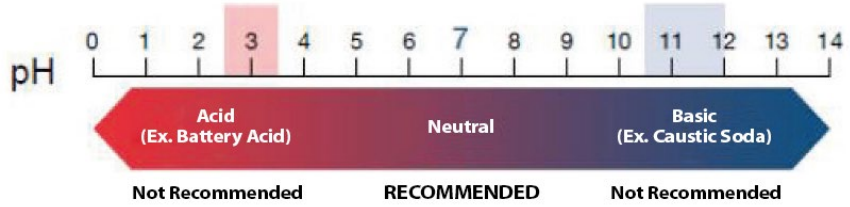

07 - Let the machine dry in the shade so that water does not accumulate in its components. Drying too fast can stain your paint.

08 - After drying, lubricate all grease fittings according to the operator's manual recommendations.

09 - Spray the entire machine, especially galvanized parts, with protective oil, following the manufacturer's application guidelines. The guard also prevents dirt from sticking to the machine, facilitating subsequent washes.

10 - Observe the cure time (absorption) and application intervals as recommended by the manufacturer.

ATTENTION | **Do not use any other oil to protect the seeder (used hydraulic oil, "burnt" oil, diesel oil, castor oil, kerosene, etc.).**

IMPORTANT | **We recommend the following protective oils:**
Bardahl: Agro protective 200 or 300
ITWChemical: Zoxol DW - 4000 Series

NOTE | **Ignoring the above conservation measures may result in the loss of warranty for painted or galvanized components that may be oxidized (rust).**

▪ Lifting

• Lifting warnings - Part I

⚠ Read all the information on pages 94 to 96 carefully before starting the Lifting the SKADI procedure according to the instructions on pages 97 and 98.

⚠ Before starting to lift the SKADI, look for a safe and easily accessible place that is clean and free of oil, grease, and that is not wet, as there is a danger of accidents. .

⚠ To avoid serious injury or death while lifting the SKADI, use EPI'S (Personal Protective Equipment).

⚠ Do not drag the hooks, chains, or slings as they can cause damage and should be avoided.

⚠ Before starting to lift the SKADI, make sure that there are no people near, above, or under it. NEVER stay on top or under the suspended SKADI. Ignoring this warning could cause serious injury or death.

⚠ When lifting SKADI, prevent it from getting tangled somewhere. Do not subject the equipment to unnecessary strain.

⚠ Never fix the load on the end of the hook. Use large eyelets or fix them with a suitable shackle⚠ Nunca tente forçar a fixação de um anel de grandes dimensões em um gancho de dimensões menores, utilize gancho com abertura adequada.

⚠ Raise the SKADI a few centimeters from the floor and check that the fixation is secure and that the angles and stresses on the sling legs are correct, before starting the movement.

⚠ Move the SKADI with care. Lower it gently to avoid jolts or collisions.

⚠ If necessary, move the hook with your fingertips only; never put your hand inside it, as your fingers may be pinched by the load.

⚠ When attaching with lifting eyes, make sure that the eyes are properly positioned. The ends of the hook must be positioned outside the load.

⚠ Before lifting the SKADI, make sure that the weight of the SKADI is evenly distributed.

⚠ Never lift the SKADI using a strap that is used for securing the cargo. These materials are sized only to tie cargo and do not support its weight. For lifting, use only GRADE 8 or 10 chains with oad capacity compatible with the weight of the SKADI to be lifted

⚠ The accessories must have the same load capacity as the chain; Do not repair broken chains with wires, screws or solder. Replace any chain that is damaged.

⚠ AoWhen lifting with multiple slings on a single hook, the lifting angle should not be greater than 90°. The hook may be damaged and there is a risk of opening the hook lock.

⚠ Do not twist the fixation of a chain link with a hook, always use a load ring.

▪ Lifting

• Warnings for lifting - Part II

⚠ Never move the SKADI with the chain twisted

⚠ Make sure that the responsible person is instructed in the correct lifting of the SKADI. Read or explain all procedures to a person who cannot read.

⚠ Baldan is not responsible for any damage caused in unforeseeable situations or outside the normal lifting of the SKADI.

⚠ Incorrectly lifting the SKADI can result in serious or fatal accidents and damage to the seeder.

⚠ Alcoholic beverages or some medications can cause loss of reflexes and change the physical conditions of the person in charge and the people involved in lifting the SKADI, so never lift the SKADI under the use of these substances.

▪ Lifting

• Inspection of lock hooks, chains, and slings

01 - A thorough periodic examination must be done at least every 12 months or more frequently according to the rules and type of use of hooks, chains and slings.
02 - Regular inspection includes both functional checks and periodic maintenance.
03 - Inspections of hooks, chains, and slings must be carried out by people who have knowledge of the design, use, and maintenance of these materials.
04 - Before inspecting a chain, it must be thoroughly cleaned, removing the subject and oil. All cleaning methods that do not attack the chain's base material are acceptable.
05 - Overloaded chains and slings must be discarded. Permanent stretching is not allowed.
06 - Chains with cracks or cavities must be discarded.
07 - When a twisted chain is overloaded it develops permanent deformations. In this case, this chain must be replaced immediately.
08 - If the chain contains deformed links or deep corrosion, it must be replaced immediately.
09 - Damage or wear on hooks, chains and slings must be reported to your superior, who in this case must arrange for their withdrawal from use for repair or replacement.
10 - Hooks, chains, and slings that remain unused for a period of time, must be inspected before being used again.

• Storage

01 - Adequate storage should be provided, preferably at room temperature. Good storage preserves hooks, chains, and slings and facilitates their location.
02 - Hooks, chains, and slings stored for a long time must be protected against corrosion.
03 - Hooks, chains, and slings that remain unused for a period of time, must be inspected before being used again.

In case of doubts about inspection and storage of hooks, chains, and slings, consult the manufacturer's manual.

▪ Lifting

• Lifting the SKADI - Part I

Observing all the guidelines on pages 94 to 96, lift the **SKADI** for this, proceed as follows:

01 - First, release the lock (1) and remove the pin (2).

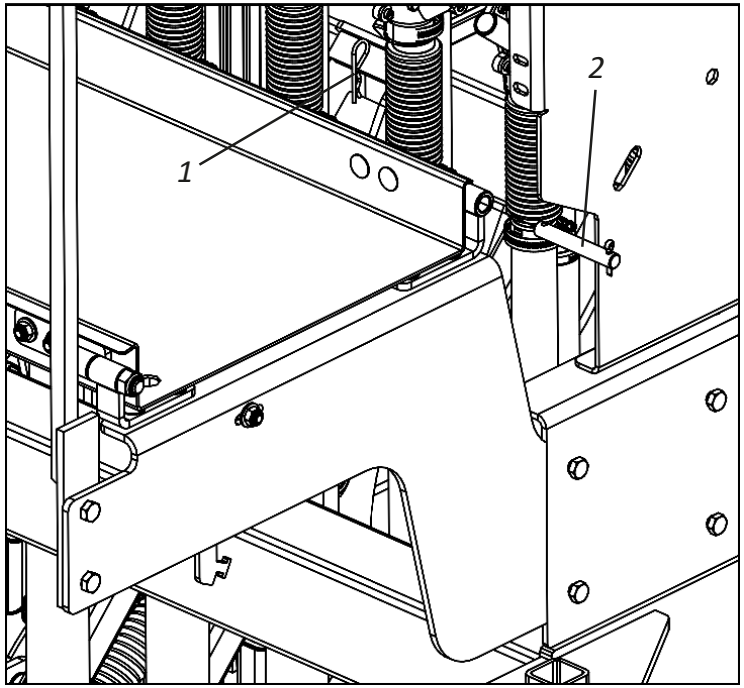

02 - Then, articulate the platform (3).

03 - Then, articulate the lever (4) to lock the articulated platform (3).

04 - Then, follow the instructions on the next page to lift the **SKADI**.

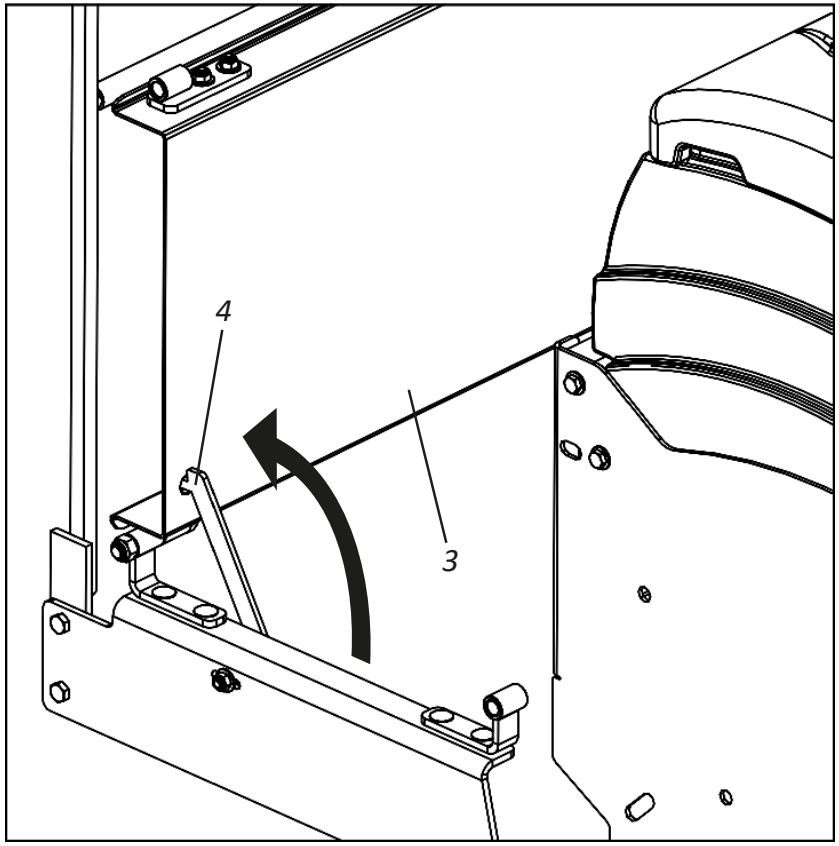

⚠ ATTENTION | **Articulate the lever (4) on both sides of the seeder to better lock and support the articulated platform (3).**

❗ IMPORTANT | **Remove the cotter pin (1) and the pin (2) on both sides of the seeder to fully unlock the platform (3).**

Lifting

• Lifting the SKADI - Part II

05 - After articulating the platform (3), engage the hooks on the supports (5) at the front and on the supports (6) at the rear of the **SKADI**, according to the instructions below.

Model	No. of Lines	Estimate Weight (Kg)	
		Without Marker / Fine Seed Without Side Transport	With Marker / Fine Seed With Side Transport
SKADI 5000	25	5570	6400
SKADI 6000	29	5875	6760
SKADI 7000	33	6930	7870

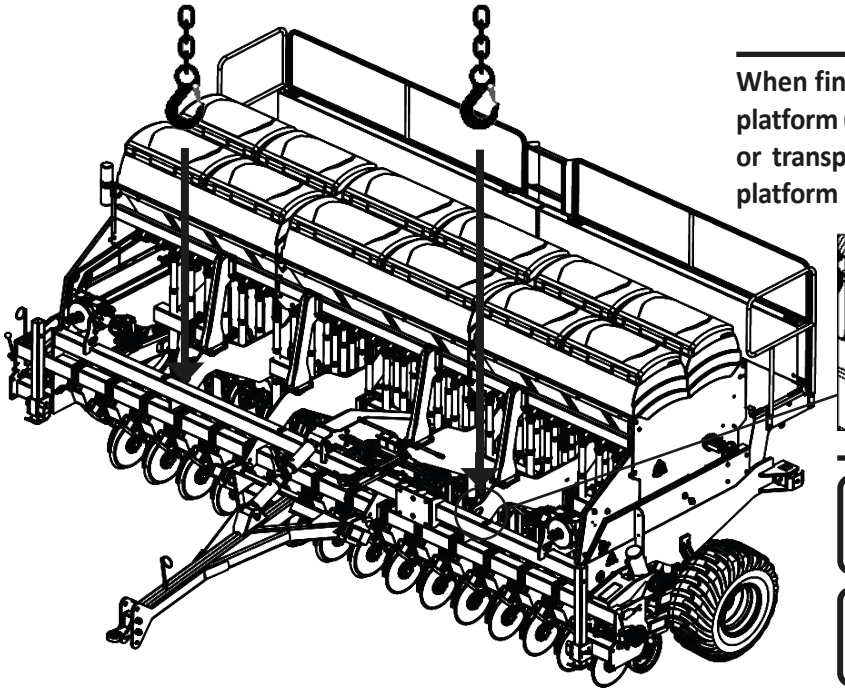

NOTE

When finishing the SKADI lift, lower the platform (3) again, locking it. Do not work or transport SKADI with the articulated platform (1).

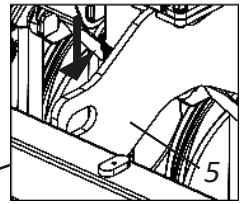

FRONT HITCHES

REAR HITCHES

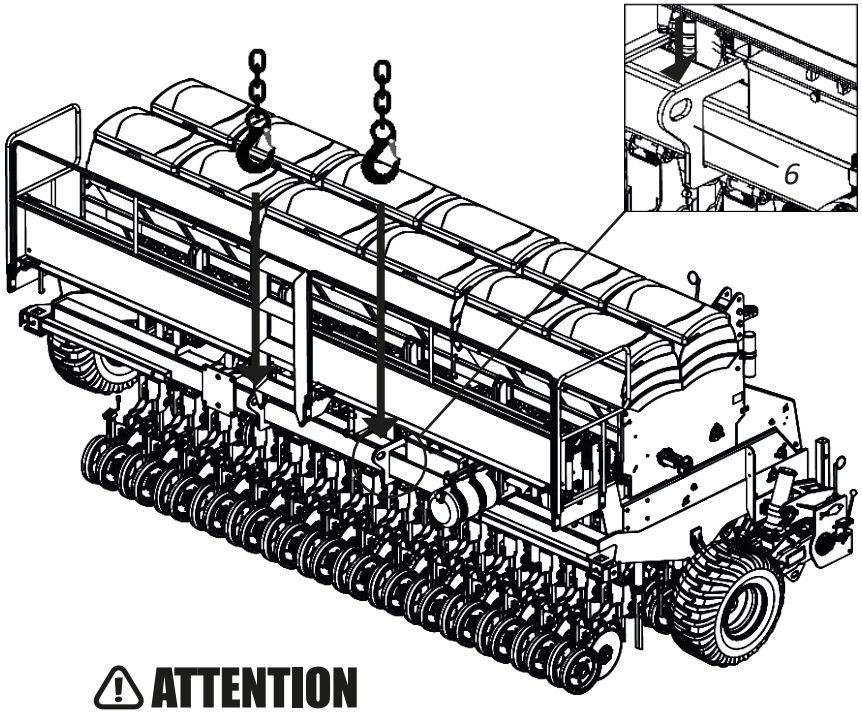

ATTENTION

Use standard hooks and chains, that is, that meet safety standards. The hooks and chains used for lifting the SKADI must be GRADE 8 or 10 with a load capacity compatible with the weight of the SKADI to be lifted.

Before starting to lift the SKADI, check the WEIGHT of the SKADI to use the appropriate hook, chain or sling and make sure that there are no people near, above or under the seeder. NEVER stay on top or under the suspended SKADI.

Optional

• Optional accessories - Part I

The **SKADI** has options that can be purchased according to the need for work.

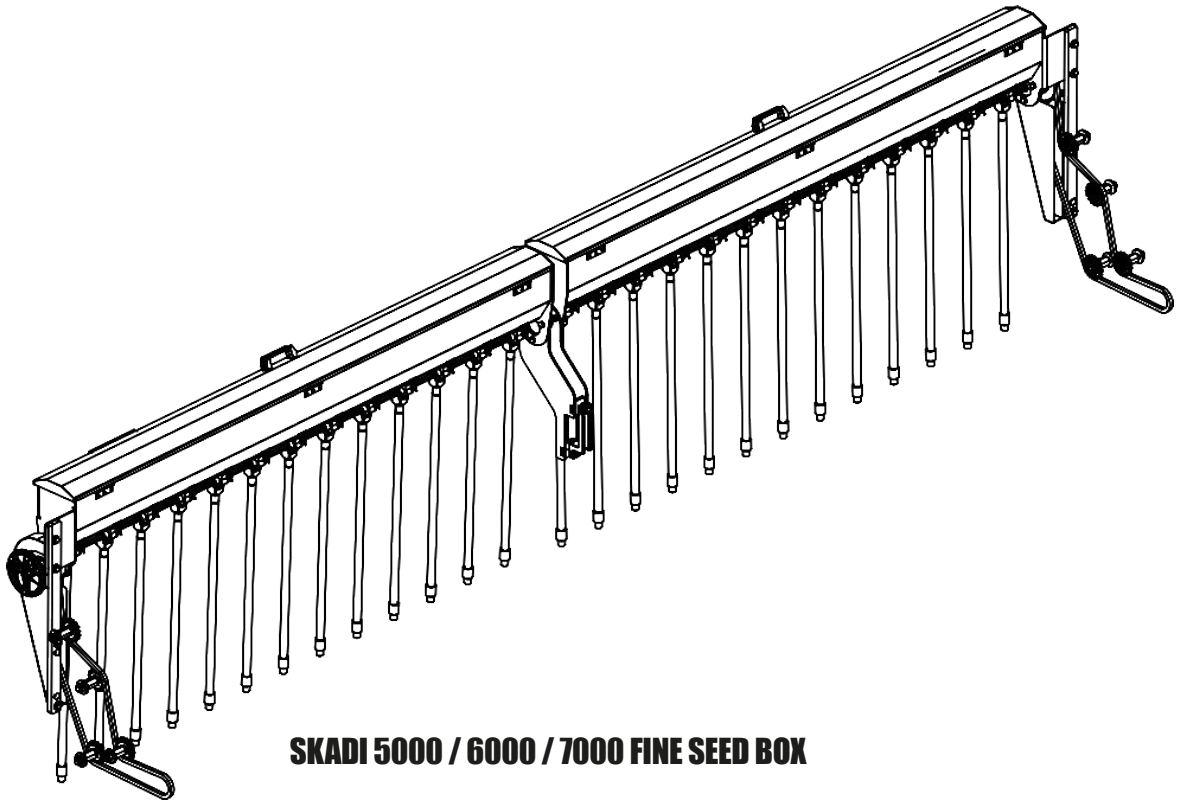

SKADI 5000 / 6000 / 7000 FINE SEED BOX

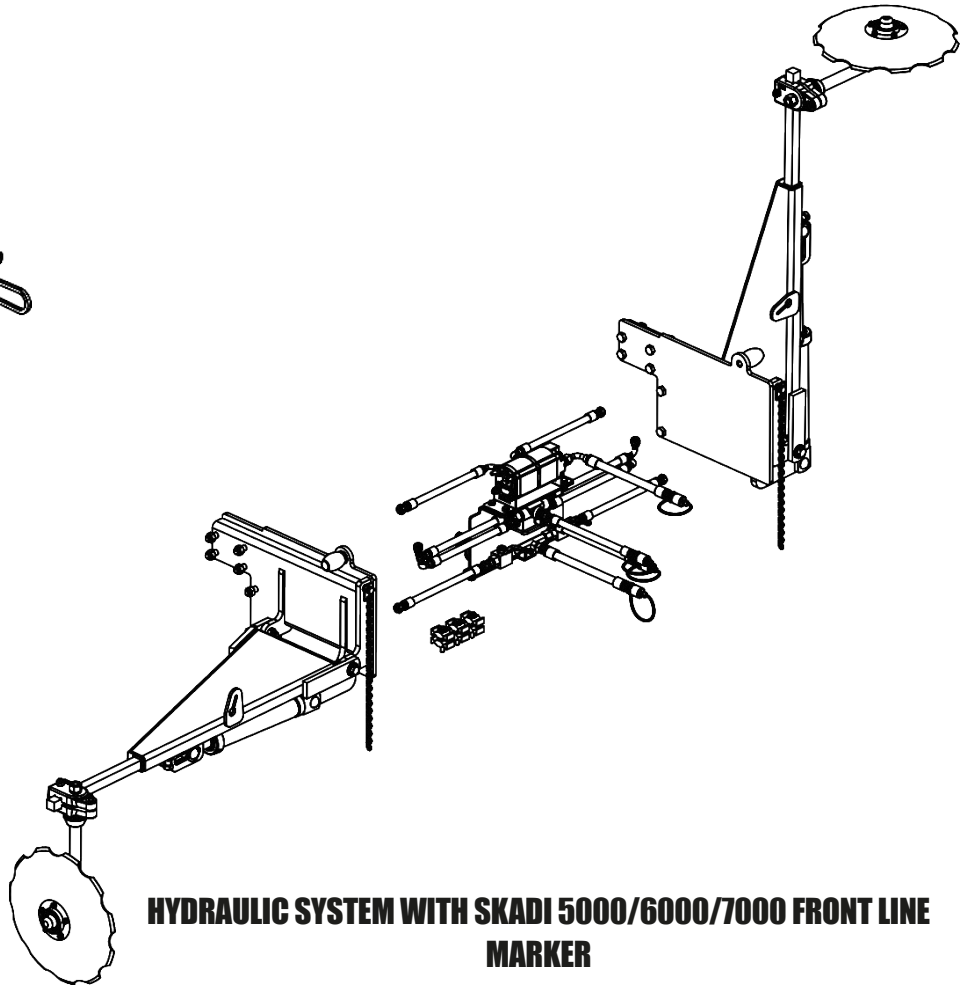

HYDRAULIC SYSTEM WITH SKADI 5000/6000/7000 FRONT LINE MARKER

Optional

• Optional accessories - Part II

The **SKADI** has options that can be purchased according to the need for work.

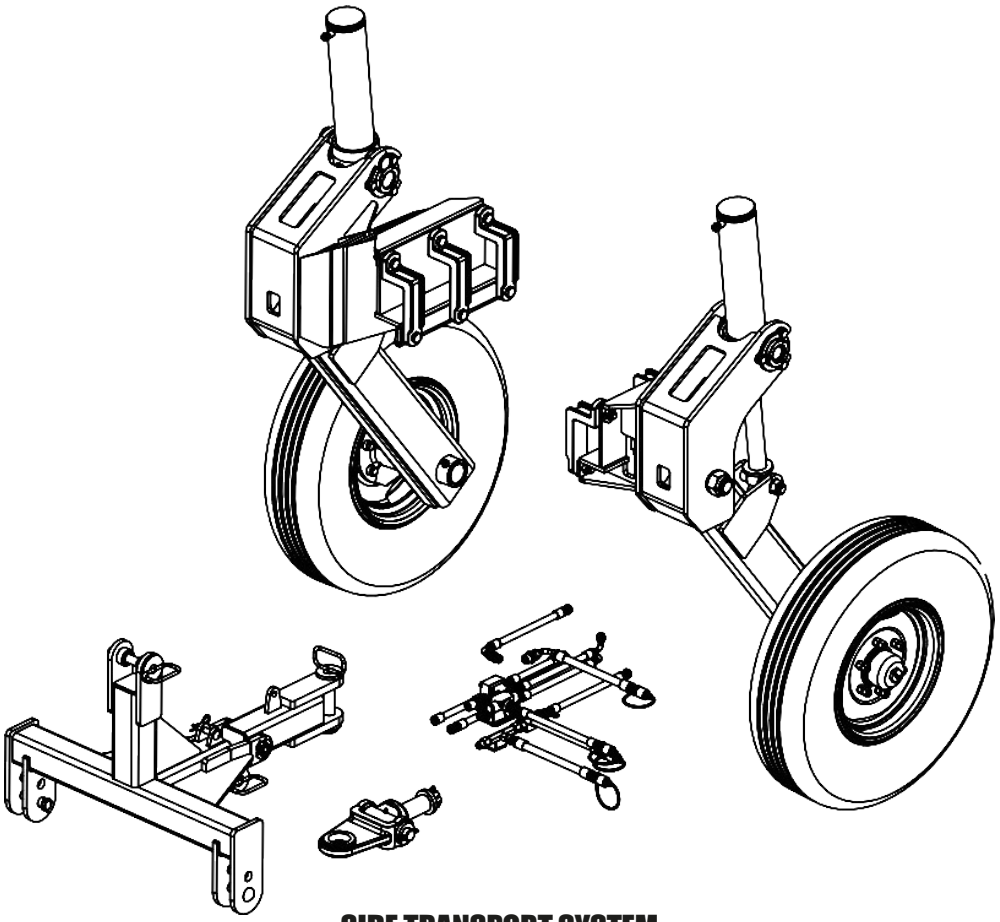

SIDE TRANSPORT SYSTEM
SKADI 5000/6000/7000

VISUM MONITOR | VISUM FERTILIZER | VISUM FINE GRAIN

VISUM SYSTEM
SKADI 5000 / 6000 / 7000

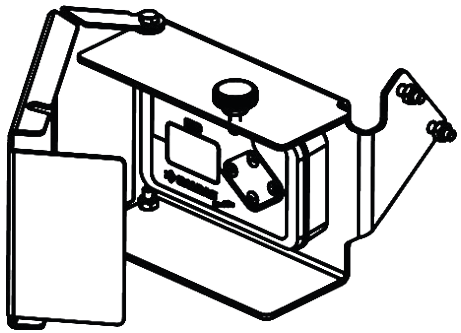

ETD (ELECTRONIC DOSING TABLE)
SKADI 5000 / 6000 / 7000

Operation manual ETD (Electronic Dosing Table) - Optional

• Presentation

The **ETD** is an electronic device that can be connected to planters, seeders, and fertilizers to assist the operator in configuring the best gear ratio so that the correct dosage of seeds and fertilizers occurs, according to the needs of each area/plot, based on the adjustments previously done in the field and calibrations before planting. It allows to perform other additional functions such as the registration of planted hectares, hours actually worked and planting speeds above specified, and this important information is recorded and shown on the **ETD** electronic device display.

⚠ ATTENTION | **To use the ETD (Electronic Dosing Table), refer to the instruction manual on the following pages.**

▪ Operation manual ETD (Electronic Dosing Table) - Optional

• Assembling the magnets on the main shaft

The magnets (1) must be installed on the planter's primary shaft, after the shutdown ratchet, as this way, hours and hectares of when the machine is in transport will not be counted. A magnet must be installed on each face of the shaft (3), securing them with two nylon clamps (4) so that whoever is properly fixed and positioned (4).

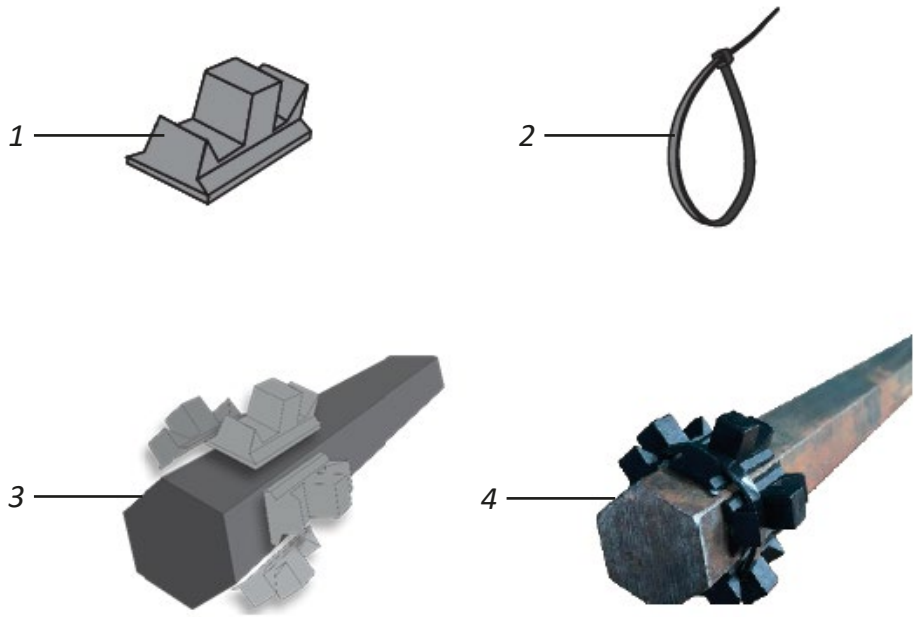

• Assembling the speed sensor

Mount the sensor (1) on the support (2) fixing by the nuts (3) according to the image (4).

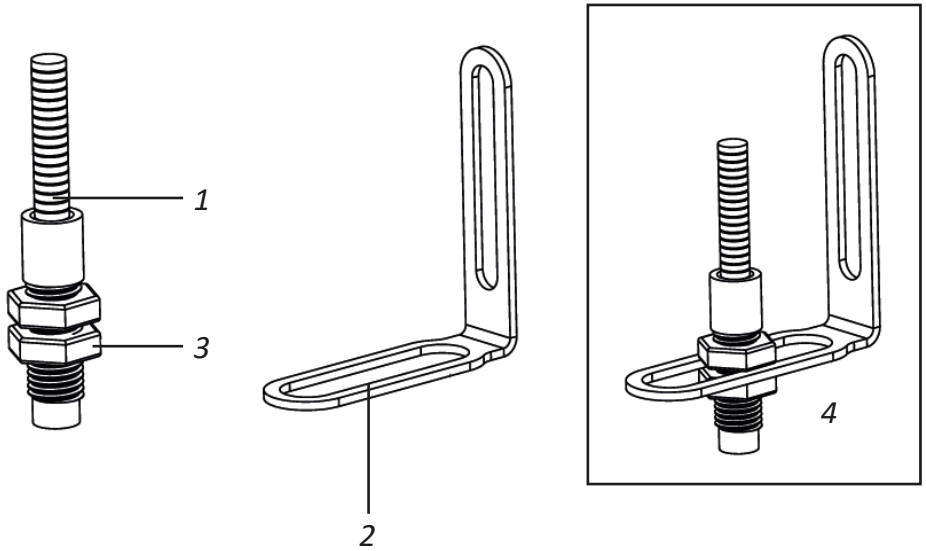

▪ Operation manual ETD (Electronic Dosing Table) - Optional

• Speed sensor installation

Attach the sensor support (1) to the machine chassis (2) using the M8x30 screw (3) making sure that the distance between the sensor and the magnets is less than 3 mm (4). It is extremely important to align the speed sensor and the magnets on the primary shaft (5).

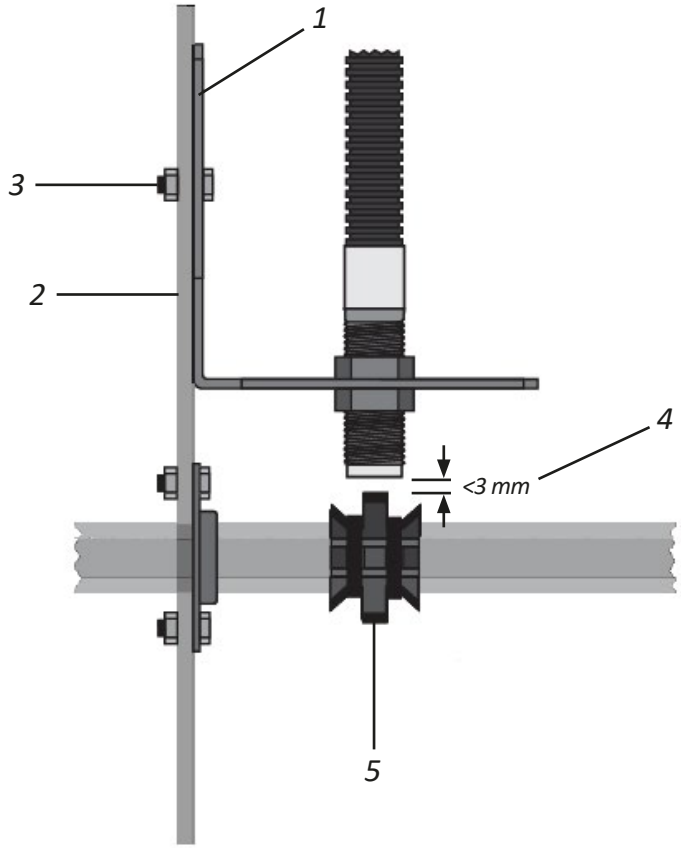

• Identification

A - Display
B - Function key
C - Decrease item
D - Login
E - Increase item

The ETD has four keys
Function F key **The Function F key is used to change between the four main functions of the ETD, which are:** **F1: Seed Rate** **F2: Fertilizer Rate** **F3: Hobbs Meter** **F4: Hectometer** **Within the menus, the Function F key assumes the "back" function, which facilitates navigation.**

Teclas
The keys ▼ and ▲ are used to increase the numeric items of the interface. The icon with arrows above and below the interface indicates the item to be controlled by the keys. **Keys ▶** **The key ▶ is used as a "enter" function. This key allows you to enter the options that are shown in the lower right corner of the interface.**

▪ Operation manual ETD (Electronic Dosing Table) - Optional

• Settings menu

The settings menu (1) can be accessed through the Function F key, when pressed for more than 2 seconds.

The settings menu has 7 items. The keys ▲▼ (2) are used to navigate between menu items.

The Select key ▶ (3) is used to select the highlighted item. Just click on the "F" key (4) to exit the settings menu

To select the start of the calibration click 'Yes' ▶ (1).

• Sensor calibration

When starting the sensor calibration (2), the machine must be moved for exactly 100 meters (3) and stopped.

The number of pulses (4) counted by the sensor is shown on the screen. To complete the calibration, the operator must press ▶ the (5) "Ready" key.

The calibration of the sensor is important for the ETD to determine the number of hectares worked, the machine's working speed and also the distance covered in the fertilizer calibration.

If, during displacement, the number of pulses corresponding to the end of the 100m is not displayed, the displacement of the sensor or magnets may have occurred, making it impossible to read the pulses during the displacement. In this case, it is necessary to carry out the adjustment of these components according to the assembly diagram, item 4 "INSTALLING THE SPEED SENSOR", previous page.

Operation manual ETD (Electronic Dosing Table) - Optional

• Machine

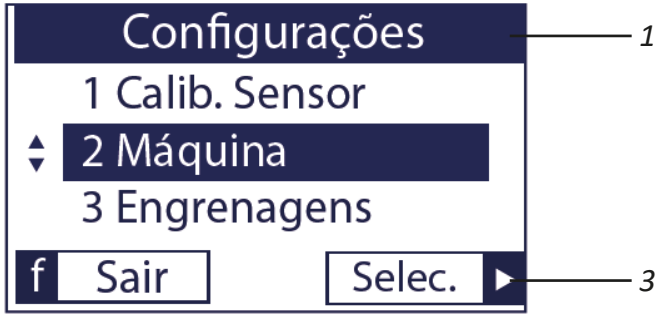

In the machine configuration (1), click 'Select' ▶ (2) to enter the number of lines using the buttons ▲▼ (3).

Número de linhas, faixa de valores: 01 ~ 80.

After selecting the number of lines contained in the machine, press the 'Next' key ▶ (4) to select the line spacing using the buttons ▲▼ (5).

• Sensor calibration

When clicking on "Save" ▶ (6), the system saves the settings and displays the following message.

This information is very important for the presentation of the worked hectares and also for the calibration of fertilizer rates.

Operation manual ETD (Electronic Dosing Table) - Optional

• Seed rate

The **Seed Rate** function is not used in fine grain seeders.

• Fertilizer rate - Part I

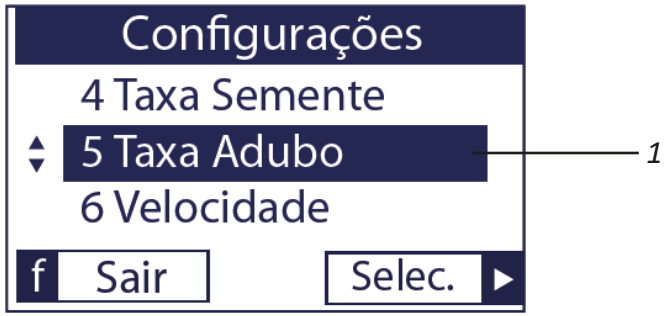

The F2 (1) screen indicates the fertilizer rate (2) in kg per hectare obtained with a specific gear ratio. Fertilizer rates are calculated according to the fertilizer calibration, the gear configuration (3) and the spacing between lines. The ▼ and ▲ keys (4) allow the user to navigate between the rate options in Kg/ha.

Fertilizer Rate: ETD

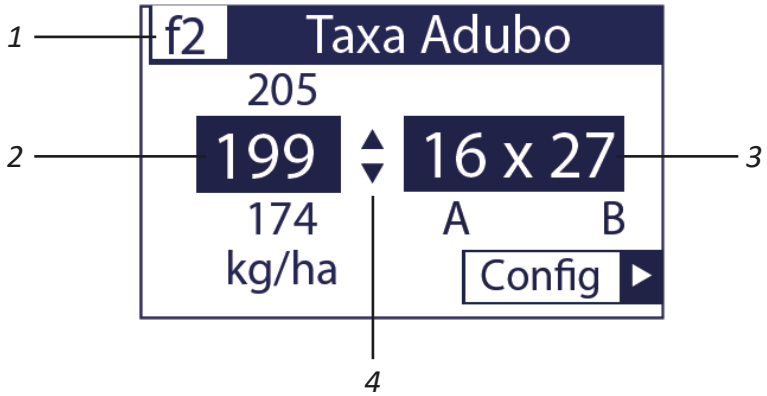

Operation manual ETD (Electronic Dosing Table) - Optional

• Fertilizer rate - Part II

The fertilizer rate menu has two items: Total Calculation (5) and Calibrate Fertilizer (6).

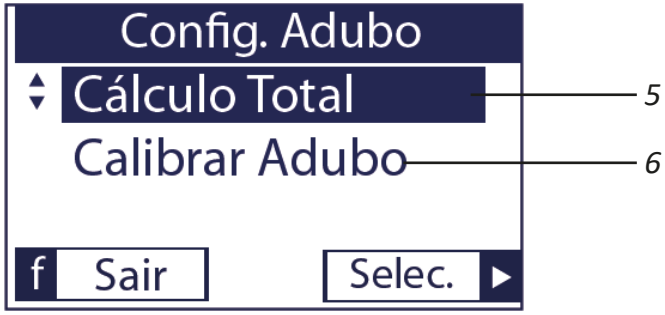

• Total calculation

In total calculation (5), the user can calculate the amount of total fertilizer in tons (8) required for planting a given area, in hectares. The last fertilizer rate selected on the function screen F2 (9), selected using the key ▲▼ (10) is used as a reference for the calculation.

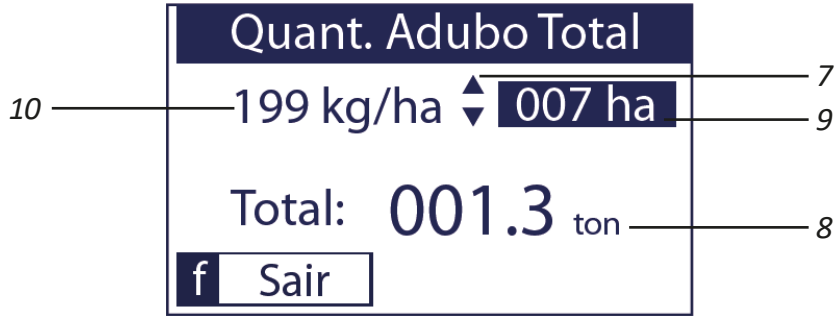

• Calibrate fertilizer - Part I

The fertilizer calibration (11) has 3 steps. First, you must inform the gear ratio (12) used on the machine at the time of calibration. **EXAMPLE:** In the SPEED BOX, configure the option Mot **6** and Mov **F**, then inform the same configuration in the ETD; then walk 50 m collecting at least 3 fertilizer outlets, make the average and enter the value in the electronic table).

▪ Operation manual ETD (Electronic Dosing Table) - Optional

• Calibrate fertilizer - Part II

On the next screen, the operator must walk with the machine collecting the fertilizer over a distance greater than 50 meters (1). It is important that the sensor is already calibrated so that the distance covered is measured correctly. The distance traveled is displayed instantly (2).

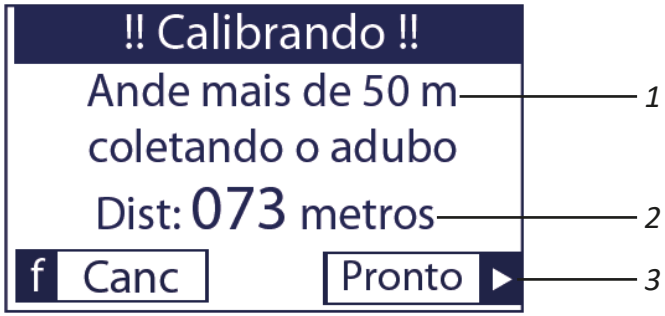

After covering the required distance, click on Ready (3).

NOTE: The minimum distance to be covered is 50 meters, if this distance is insufficient, the screen for entering the weight of the collection will not be enabled and the following warning will be displayed:

On the next screen (1), the total weight of the collected fertilizer (2) in a row or the average of the collection, always in grams, is reported.

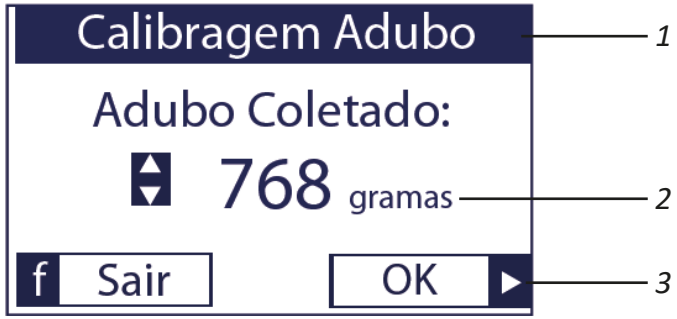

Fertilizer collected, value range: 10 ~ 9000 grams.

Click on 'OK' (3) the 'calibration completed' message is displayed.

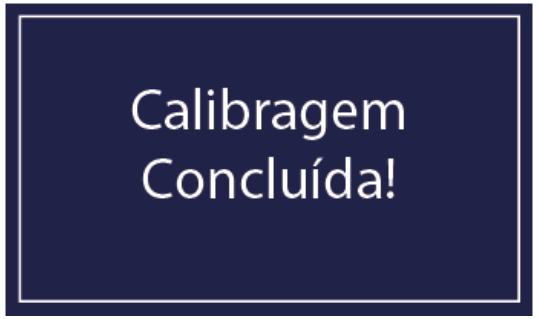

Operation manual ETD (Electronic Dosing Table) - Optional

• F3 Hobbs Meter

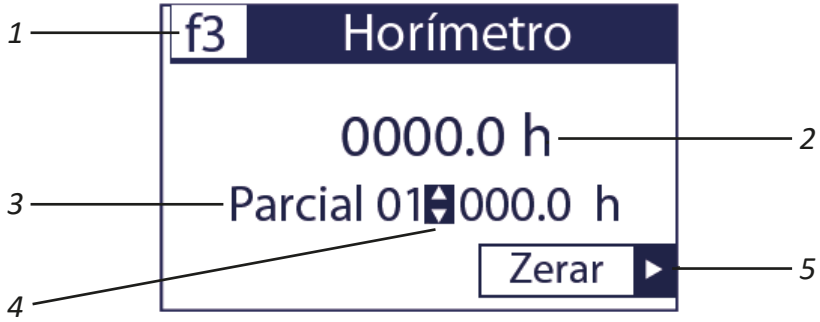

The F3 screen (1) indicates the total number of hours (2) of work with the ETD in three partials (3), which can be related to the keys ▲▼ (4)

To reset a certain partial, the Reset key (5) must be held down for more than 2 seconds.

The hours counted refer only to the time that the machine was in effective work, that is, with the ratchet turned on. Thus, hours of handling the ETD or traveling with the machine in the transport position will not be counted.

• F4 Hectometer

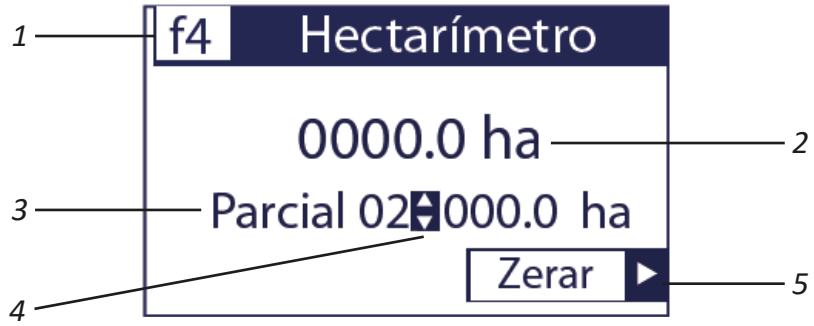

Screen F4 (1) indicates the total number of hectares worked (2) with the ETD, also in 3 partial ones (3), which can be selected using the keys ▲▼ (4).

▪ Operation manual ETD (Electronic Dosing Table) - Optional

• Settings menu

The settings menu (1) can be accessed through the Function F key, when pressed for more than 2 seconds.

The settings menu has 7 items. The keys ▲▼ (2) are used to navigate between menu items.

The Select key ▶ (3) is used to select the highlighted item. Just click on the "F" key (4) to exit the settings menu.

To select the start of the calibration click 'Yes' ▶ (1).

• Sensor calibration - Part I

When starting the sensor calibration (2), the machine must be moved for exactly 100 meters (3) and stopped.

▪ Operation manual ETD (Electronic Dosing Table) - Optional

• Sensor calibration - Part II

The number of pulses (4) counted by the sensor is shown on the screen. To complete the calibration, the operator must press the (5) “Ready” key ▶ .

The calibration of the sensor is important for the ETD to determine the number of hectares worked, the machine’s working speed and also the distance covered in the fertilizer calibration.

If, during displacement, the number of pulses corresponding to the end of the 100m is not displayed, the displacement of the sensor or magnets may have occurred, making it impossible to read the pulses during the displacement. In this case, it is necessary to carry out the adjustment of these components according to the assembly diagram, item 4 “INSTALLING THE SPEED SENSOR”, page 85.

• Machine - Parte I

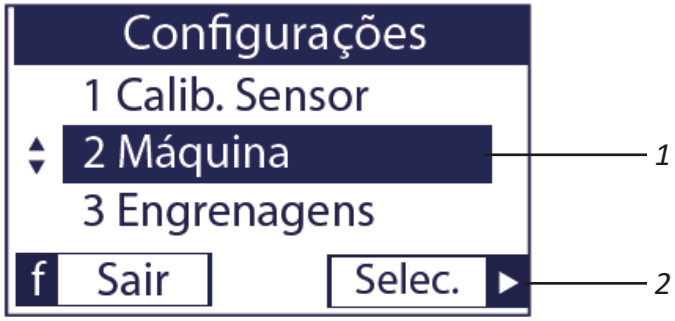

In the machine configuration (1), click ‘Select ▶(2) to enter the number of lines using the buttons ▲▼ (3).

Number of lines, range of values: 01 ~ 80.

After selecting the number of lines contained in the machine, press the ‘Next’ key ▶ (4) to select the line spacing using the buttons ▲▼ (5).

Operation manual ETD (Electronic Dosing Table) - Optional

• Machine - Parte II

Spacing, range of values: 01 ~ 99 cm.

When clicking on "Save" ▶ (6), the system saves the settings and displays the following message.

This information is very important for the presentation of the worked hectares and also for the calibration of fertilizer rates.

• Time above maximum speed

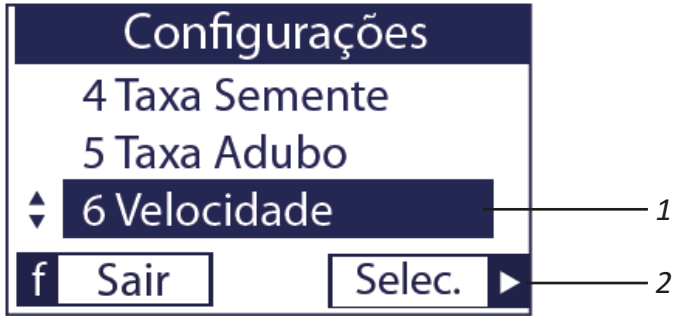

By clicking on 'Select.' ▶ (2) in the 'Speed' setting (1) it will be shown for how many hours (4) the machine has been working above the limit speed (3).

Manual visum fertilizer and fine grain visum - Optional

• Presentation

VISUM
MONITOR

VISUM
FERTILIZER

FINE
GRAIN VISUM

The VISUM sensor is the technology that allows the farmer to remotely monitor the presence or absence of the flow of fertilizer/fine grains, alerting to possible clogging and failures. When there is an interference in the flow of the metered input, a quick response is sent to the user.

Addressing location

Magnetic pen

Manual visum fertilizer and fine grain visum - Optional

• Specifications

Monitor

- 2.4GHz Radio Frequency Communication
- GFSK modulation
- Omni-directional antenna, 5dBi, 50 Ohms
- RP-SMA connector
- Supply voltage: 10Vdc up to 30Vdc
- Display with 2 characters of 7 segments
- 2 Red/Green/Orange LEDs
- Resistant to dust and water splash

Sensors

- Resistant to dust and running water
- 2.4GHz Radio Frequency Communication
- GFSK modulation
- Indoor Antenna
- Dimensions: 71mm (H) x 89mm (W)
- Weight: 145g
- Inner diameter of the sensor: 45 mm

▪ Manual visum fertilizer and fine grain visum - Optional

• Addressing - Part I

In order for all sensors to communicate with the monitor, they must be configured on the communication network.

Each monitor has a unique address, which can be found on its rear label.

A Addressing must be done using the monitor's F5 function:

Follow the steps below:

Passo 1: Press the gear-shaped button (⚙) for 2 seconds to enter the settings and, to change the function, press it again.

Passo 2: When in the desired function, press the button ⏻ . Go to the addressing function (F5) and press the symbol ⚙ to enter the function.

Passo 3: Select the line you want to add the sensor to by pressing and ⚙ confirm its number by pressing ⏻ .

Passo 4: When the display shows "Ad", wake up the sensor (shake slightly) and place the magnetic pen in the line indicator region.

▪ Manual visum fertilizer and fine grain visum - Optional

• Addressing - Part II

Passo 5: With the magnetic pen, make circular movements in the indicated region.

Passo 6: Wait for the **BEEP** (audible) or confirmation message.

Passo 7: Cut the **address indicator** to form the seeder number and the line that addressed the sensor.

B How to dial numbers

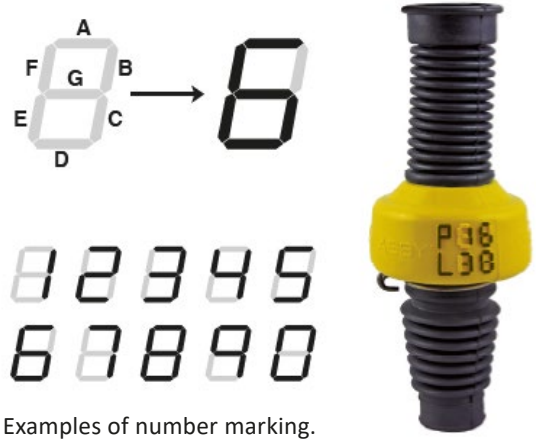

Examples of number marking.

Passo 8: The operation can be canceled by pressing the button ⚙.

Passo 9: When the configuration is complete, the display will show **"ok".**

Passo 10: Press ⏻ to exit the function and return to the operating mode or press ⚙ to add the next sensor. In this case, repeat **step 2** onwards. The monitor will automatically increment the number by one.

Passo 11: To access basic functions again, repeat **step 1**.

⚠ **ATTENTION:**

Never configure 2 (two) sensors simultaneously. Wait around 10 seconds to start configuring the next sensor.

IMPORTANT:

If you want to change the sensor address again, repeat these steps.

▪ Manual visum fertilizer and fine grain visum - Optional

• Operation - Part I

BEFORE use

- O The monitor must be installed with the antenna in a **vertical position**:

- The **VISUM** monitor communicates with the flow sensors, indicating the presence or **absence/obstruction** of flow.

- When turning on the monitor, "**00**" should appear on the display, indicating that no sensor has communicated so far. If this message does not appear, "**- -**" will appear with all **LEDs off**. The meaning of both is the same.

- Every time the monitor is turned on, check that all sensors are present. To confirm, after **5 minutes** of connected use, use the **F1 function**.

DURING use

- In normal situation (sensors communicating and indicating flow) the display should show **two dashes** "**- -**" and the **LED** of the respective function (fertilizer or seed) **should be green**, indicating that all functioning **is correct**.

- The monitor **communicates only with the sensors present at the same address as the monitor.** This address can be found on the monitor's rear label.

- In case of **flow failure** (absence or clogging), the monitor **will beep** and the problem **line number** will appear on the display. The LED correlated to the product type flow (fertilizer or seed) will turn red.

Manual visum fertilizer and fine grain visum - Optional

• Operation - Parte II

- If the sensor **loses communication for more than 5 minutes**, the monitor will indicate that the sensor is absent and will **beep**, showing the line number, with the **orange LED** of the **respective** sensor (seed or fertilizer) flashing. In some cases, the orange LED may also light up and not flash.

- In the case of MANEUVER, the display will be in **alternating mode**, that means that the lines will be alternating, forming the symbol on the side.

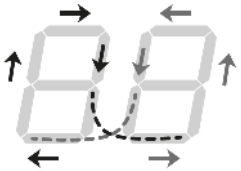

- When **75% of the sensors** are indicating **no flow**, the monitor will start to **maneuver**.

- The monitor leaves the switching state when more than **50% of the sensors indicate the presence of flow.**

- In order to **save battery**, when not in use, the flow sensors are in **sleep** or **standby** mode. They enter into operating mode only when they are moved, for example, when the implement moves and the monitor is on.

• Removing and reinstalling - Part I

FERTILIZER SENSOR | **GRAVITY**

The **sensor** is positioned between the fertilizer **batcher** and the **hose** that transports the batcher input to the conductor

If there are rigid plastic extension bends attached to the batcher - **the sensor must be installed just after the bends**.

If you need to remove the sensor, follow the steps below to do the reinstallation.

ATTENTION:

The installation may vary, and may contain all the items in the photo in the installation.

(Merely illustrative images).

▪ Manual visum fertilizer and fine grain visum - Optional

• Removing and reinstalling - Part II

1. **Lower the seeder, remove the original clamps and hoses from the batchers.**

2. Choose a new hose that, fitted to the sensor, results in a length that is as close as possible to the **original hose**, or slightly shorter **(never longer)**. See the images below.

3. The **upper** and **lower hoses** are included in the product.

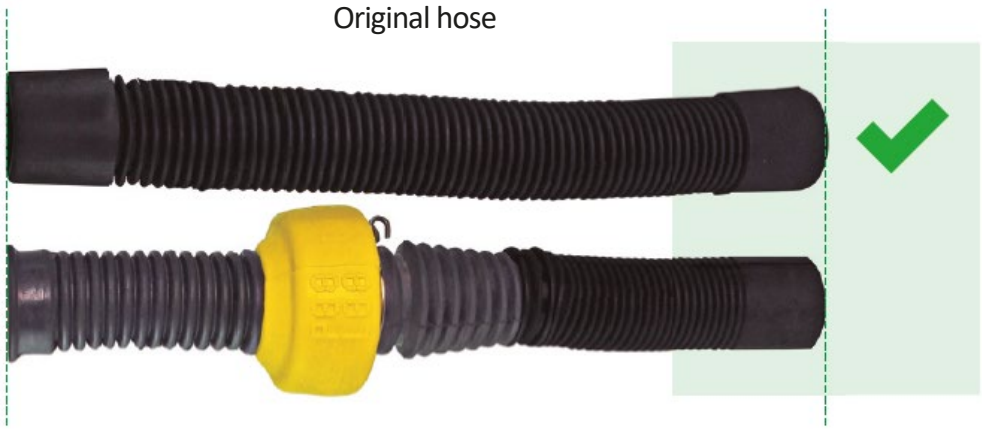

▪ Manual visum fertilizer and fine grain visum - Optional

• Removing and reinstalling - Part III

ATTENTION:

Keep the original length of the hose.

INCORRECT hose size (larger than the original).

4. After assembling the hose lower than the machine hose, **fasten** it with a plastic **clamp** or **Hellerman tape**.

5. Use the **metal clamp** on the product to attach the lower hose to the sensor.

ATTENTION:

If the seeder has hoses with different lengths between the lines, the above procedure must be done for each line.

▪ Manual visum fertilizer and fine grain visum - Optional

• Removing and reinstalling - Part IV

6. 6. Install the fertilizer sensor at the **outlet of the batcher nozzle**.

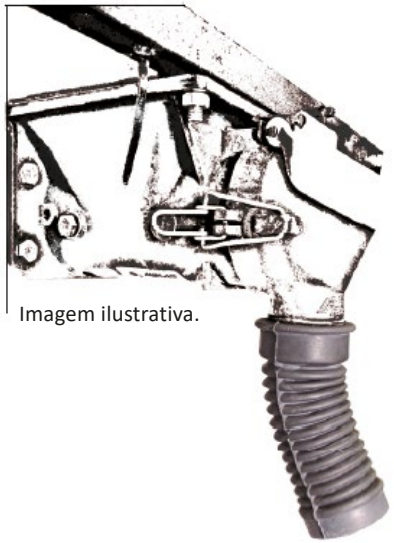
Imagem ilustrativa.

IMPORTANT:

Raise and lower the seeder, making sure that:
• With the seeder raised, the hoses are not extremely stretched.
• With the seeder down, there is no excess formation (bellies) in the hoses. **If there is an excess** (or is too stretched), mount the sensor with a smaller (or larger) hose and eruptive check.
If an extension is required, check the recommended assembly (figure below).

7. Place the metal clamps on the **upper hoses**.

Assembly with an **EXTENSION.**

TIP:

Check that the **sensor** or the **upper** and **lower hoses** are too inclined. If the inclination is **greater than 45°, an extension tube should be used.**

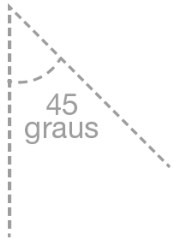

▪ Manual visum fertilizer and fine grain visum - Optional

• Removing and reinstalling - Part V

FINE GRAIN SENSOR | **GRAVITY**

The **fine grain** sensor for **gravity** batcher was developed especially for the detection of small seeds, dosed by volume.

The sensor must be installed on the machine respecting the original length of the hoses.

If you need to remove the sensor, follow the steps below to do the reinstallation.

For this type of machine the installation may vary, and may not contain all the items in the photo in the installation.

(Merely illustrative images).

1. **Lower the seeder, remove the original clamps and hoses from the** batchers.

2. Choose a new hose that, fitted to the sensor, results in a length that is as close as possible to the **original hose**, or slightly shorter (**never longer**). See the images on the next page.

3. The **upper and lower** hoses are included in the product.

Original hose.

CORRECT size of the hose

▪ Manual visum fertilizer and fine grain visum - Optional

• Removing and reinstalling - Part VI

⚠ **ATTENTION:**

Keep the original length of the hose.

INCORRECT hose size (larger than the original).

4. Attach the lower sensor hose to the new hoses and use a metal or plastic **clamp** for fastening.

5. Use the **metal clamp** on the product to attach the lower hose to the sensor.

⚠ **ATTENTION:**

If the seeder has hoses with different lengths between the lines, the above procedure must be done for each line.

▪ Manual visum fertilizer and fine grain visum - Optional

• Removing and reinstalling - Part VII

6. Install the fertilizer sensor at the **outlet of the batcher nozzle.**

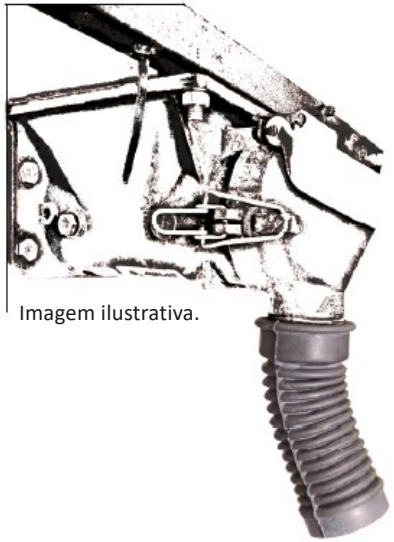
Imagem ilustrativa.

7. Place the metal clamps on the **upper hoses**.

IMPORTANT:

Raise and lower the seeder, making sure that:

• With the seeder raised, the hoses are not extremely stretched.

• With the seeder down, there is no excess formation (bellies) in the hoses. **If there is an excess** (or is too stretched), mount the sensor with a smaller (or larger) hose and eruptive check..

If an extension is required, check the recommended assembly (figure below).

Assembly with an **EXTENSION**

TIP:

Check that the **sensor** or the **upper** and **lower hoses** are too inclined. If the inclination is **greater than 45°, an extension tube should be used**.

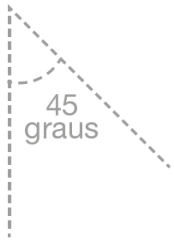

▪ Manual visum fertilizer and fine grain visum - Optional

• Function description - Part I

F1 | List sensors
Check which sensors are present on the machine and communicating.

F2 | BEEP volume
Change alarm volume **(BIP).**

F3 | Brightness
Change screen brightness.

F4 | Check address
Check which address is present on a sensor or which ID is on a given sensor.

F5 | Add sensor
Add and include a sensor for communication.

F6 | Display the address of the monitor
Indicate the address of the monitor or display the ID of the monitor in question.

F7 | Maneuver beep time
Adjust the maneuver alert time or change the maneuver alert time.

To access these basic functions, press the gear-shaped button (⚙) for 2 seconds.

To **change the function** press the gear button again and when you are in the desired function, use the button ⏻ .

If you want to go to "F3" press the button ⚙ .
When "**F2**" appears on the screen, press the button ⚙ again and "**F3**" will appear, to confirm press the button ⏻ .

F1 | List sensors
Possible states:

- **Green** Flow OK
- **Red** Flow failure (line clogging or no fertilizer).
- **Orange** Sensor missing (flashing for versions 4.7 or later).

F2 | BEEP volume
Choose the desired BEEP volume.

1. Select **F2**.
2. Select the desired volume by pressing the button ⚙ .
   V0: Mute
   V1: Low and low-pitched sound
   V2: Medium sound
   V3: Loud and high-pitched sound
3. Confirm by pressing the button ⏻ .

▪ Manual visum fertilizer and fine grain visum - Optional

• Function description - Part II

F3 | Brightness

Adjust the brightness of the LEDs and the display.

1. Select **F3**.
2. Select desired brightness by pressing the button ⚙ .
   b0: Low brightness
   b1: Medium brightness
   b2: High brightness
3. Confirm by pressing the button ⏻ .

F4 | Check address

Checks the address of a sensor:

1. Select **F4**.
2. When the display shows "**Ch**", wake up the sensor (shake slightly) and position the magnetic pen in the line indicator region.
3. The monitor will show the line number and the **8 digits** of the sensor address.
4. The operation can be canceled by pressing the button ⏻.

F5 | Add sensor

Add the sensors in the communication network:

1. Select **F5**.
2. Select the desired line by pressing the button and confirm by pressing ⏻.
3. When the display shows "Ad", wake up the sensor (shake slightly) and place the magnetic pen in the line indicator region.
4. When the configuration is complete, the display will show "ok".
5. Press ⏻ to exit the function and return to the operating mode or ⚙ to add the next sensor. In this case, repeat steps 2 onwards again. The monitor will automatically enter the number in one unit.
6. The operation can be canceled by pressing the button ⚙.

TIP:

After **20s** (seconds) the added sensor should appear listed in the **F1** function.

ATTENTION:

- All sensors must be added to the communication network at the first installation of the **J.Assy flow sensor system**.

- **Do not install two flow sensors simultaneously. Wait 10 seconds to start addressing a new sensor.**

▪ Manual visum fertilizer and fine grain visum - Optional

• Function description - Parte III

F6 | Show monitor address

1. Select **F6**.
2. After selecting, the sequence of numbers **(1 to 8)** and letters in order will appear, indicating the address of the monitor.

F7 | Maneuver beep time

Only for **version 4.7** or **higher.**

Set the time between one BEEP and another when the system is in alarm.

1. Select **F7**.
2. Use the ⚙ button to change the time value.

This value will define the seconds between one BEEP and another.

a. If you select **40, the time between the BEEPs** will be 40s.
b. The **standard time** is **20s**.
c. If you want a **value lower than 20s** just press and hold the button, after the number 99 the count starts from 01 and goes up again.

3. When the desired value is set, press ⏻ to confirm.

TIP:

- **A more frequent BEEP** is recommended when **you want to be alerted that the system has not left the maneuver**, that is, when the user tends to forget to turn on the input flow after leaving the maneuver.
- **If you wish to silence the maneuver BEEP** in a specific situation, **simply press the configuration button ⚙ for a short period**. In this case, when the system leaves the maneuver and enters again, the maneuvering BEEP will be activated again.

▪ Manual visum fertilizer and fine grain visum - Optional

• Troubleshooting

1. **The monitor won't turn on, now what?**
   Check that the cable is intact and that it is properly connected to a **12V-24V** power supply **(positive red/blue, black/negative)**. Also check that the fuse is plugged and intact.

2. **The monitor is not making a sound, how to reverse this?**
   Access the **F2** function and change the BEEP volume.

3. **The sensor battery has run out, what happened?**
   During the work, check if all the sensors are working, if you find one of them is absent, it could be the lack of battery.

   If the monitor is switched off and on again, that sensor will not appear in the list of sensors present. Check the **F1 function** for more details.

4. **The numbers on the display are faint, is my monitor having a problem?**
   It may be a problem in the configuration, access **F3 function** and change the brightness of the display.

5. **Communication is not coming from several sensors (not listed in the F1 function or orange LED) and now?**
   The problem may be a communication signal or the antenna may not be properly mounted on the monitor. Make sure it is mounted and in an upright position, try to remove obstacles between the antenna and sensors.
   Position the monitor in a location that has a direct view of the sensors. Turn off any radio sources near the sensors.

6. **The state of maneuver occurs during planting, how to solve it?**
   Check if there is enough flow in the lines or if any sections have been disconnected. If this still occurs, check if the sensors have incrusted fertilizer in its walls.

   In case of incrusted fertilizer on the walls, clean the surface with a soft cloth or sponge. Avoid using objects that could damage the sensor during cleaning.

   If necessary, the use of running water and mild soap is recommended for more effective cleaning. Do not use pressurized water, as this may damage the sensor.

7. **. The monitor is beeping, indicating an alarm on the sensor during normal work, what is the solution?**
   Check that there is no crust on the sensor and perform the cleaning, according to the instructions on the side.

▪ Manual visum fertilizer and fine grain visum - Optional

• Cleaning and storage

It is recommended to wash the sensor with **running water** and **mild soap.**

In the period between harvests, remove it from the machine and store it in a shed.

To clean the incrusted material on the wall, do not use tools to scrape it, as it may damage it. Use only a soft cloth or sponge.

WASH WITH

WATER, SOFT CLOTH AND MILD SOAP

Check the **integrity of the hoses** during maintenance. If your upper or lower hose is damaged, request assistance from our specialized team.

• Discard

At the end of the equipment's useful life, please send it to J.Assy's partner reseller in your region or to the implement assembler, if it was a direct purchase.

Thereafter, disposal will be carried out by those responsible in an appropriate manner.

In addition to the recommendations that were seen in this manual, we suggest to the operator not to abandon the standard techniques of installation, operation and maintenance.

Identification

• Identification plate

To see the parts catalog or request technical assistance from Baldan, always indicate the model (01), serial number (02) and date of manufacture (03), which can be found on the nameplate of your **SKADI**.

⚠ ATTENTION

The drawings in this Instruction Manual are merely illustrative.
In order to provide a better view and detailed instruction, some drawings in this manual have been removed from parts and safety devices (covers, protections, etc.). Never operate SKADI without these devices.

CONTACT

In case of doubts, never operate or handle your equipment without referring to Post-Sales.
Telephone: 0800-152577
e-mail: posvenda@baldan.com.br

PUBLICATIONS

Code: 60550107808 | CPT: SKADI13020F

• Product identification

Correctly identify the information below to always have information on the life of your equipment.

Owner: _____

Resale: _____

Farm: _____

City: _____

State: _____

Warranty Cert. No: _____

Implement: _____

Serial No: _____

Date of purchase: _____

Invoice: _____

▪ Notes:

▪ Certificate of Warranty

BALDAN IMPLEMENTOS AGRÍCOLAS S/A ensures the dealer normal performance of the implement for a period of six (6) months as of the delivery date on the retail invoice to the first final consumer. During this period, **BALDAN** undertakes to repair defects in material and/or of manufacture of its liability, including labor, freight and other expenses of the dealer's liability.

In the warranty period, request and replacement of eventual defective parts shall be made to the dealer of the area, who will submit the faulty piece for **BALDAN** analysis.

When this procedure is not possible and the resolving capacity of the dealer is exhausted, the dealer will request the support of **BALDAN Technical Assistance** through a specific form distributed to dealers. After analyzing the replaced items by Baldan Technical Assistance, and concluding that it is not a warranty, then the dealer will be responsible for the costs related to the replacement; as well as material expenses, travel including accommodation and meals, accessories, lubricant used and other expenses arising from the call out to Technical Assistance, and Baldan company is authorized to carry the respective invoice in the name of the resale. Any repair carried in the product within the dealer warranty deadline will only be authorized by **BALDAN** upon previous budget presentation describing parts and work to be performed.

The product is excluded from this term if it is repaired or modified by representatives not belonging to the **BALDAN** dealer network, as well as the application of non-genuine parts or components to the user's product. This warranty is void where it is found that the defect or damage is caused by improper use of the product, failure to follow instructions or inexperience of the operator.

It is agreed that this warranty does not cover tires, polyethylene tanks, cardan, hydraulic components, etc., which are equipment guaranteed by their manufacturers. Manufacturing and/or material defects, object of this warranty term, will not constitute, under any circumstances, grounds for termination of a purchase agreement, or for indemnification of any nature.

BALDAN reserves the right to change and/or perfect the technical characteristics of its products, without previous notice, and without obligation to proceed in the same way with the products previously manufactured.

▪ Inspection and Delivery Certificate

SERVICE BEFORE DELIVERY: This implement was carefully prepared by the sale organization, with all its parts inspected according to the manufacturing prescriptions.

DELIVERY SERVICE: The user was informed about the current warranty terms and instructed on the usage maintenance precautions.

I confirm that the user has been informed about the current warranty terms and instructed on the usage maintenance precautions.

Implement: _____ Serial Number: _____

Date: _____ Tax Number: _____

Dealer: _____

Telephone: _____ CEP: _____

City: _____ State: _____

Owner: _____

Telephone: _____

Address: _____ Number: _____

City: _____ State: _____

E-mail: _____

Sale date: _____

Signature / Dealer Stamp _____

1st copy - Owner

▪ Inspection and Delivery Certificate

SERVICE BEFORE DELIVERY: This implement was carefully prepared by the sale organization, with all its parts inspected according to the manufacturing prescriptions.

DELIVERY SERVICE: The user was informed about the current warranty terms and instructed on the usage maintenance precautions.

I confirm that the user has been informed about the current warranty terms and instructed on the usage maintenance precautions.

Implement: _____ Serial Number: _____

Date: _____ Tax Number: _____

Dealer: _____

Telephone: _____ CEP: _____

City: _____ State: _____

Owner: _____

Telephone: _____

Address: _____ Number: _____

City: _____ State: _____

E-mail: _____

Sale date: _____

Signature / Dealer Stamp _____

2nd copy - Dealer

▪ Inspection and Delivery Certificate

SERVICE BEFORE DELIVERY: This implement was carefully prepared by the sale organization, with all its parts inspected according to the manufacturing prescriptions.

DELIVERY SERVICE: The user was informed about the current warranty terms and instructed on the usage maintenance precautions.

I confirm that the user has been informed about the current warranty terms and instructed on the usage maintenance precautions.

Implement: _____ Serial Number: _____

Date: _____ Tax Number: _____

Dealer: _____

Telephone: _____ CEP: _____

City: _____ State: _____

Owner: _____

Telephone: _____

Address: _____ Number: _____

City: _____ State: _____

E-mail: _____

Sale date: _____

Signature / Dealer Stamp _____

3rd copy - Manufacturer (Please send completed within 15 days).

1.74.05.0059-5

AC MATÃO
ECT/DR/SP

RESPONSE CARD

NO STAMPING IS REQUIRED

THE STAMP WILL BE PAID BY:

BALDAN

BALDAN IMPLEMENTOS AGRÍCOLAS S/A.

Av. Baldan, 1500 | Nova Matão | CEP: 15993-900 | Matão-SP | Brasil
Phone: (0**16) 3221-6500 | Fax: (0**16) 3382-6500
Home Page: www.baldan.com.br | e-mail: sac@baldan.com.br
Export: Phone: 55 16 3321-6500 | Fax: 55 16 3382-4212 | 3382-2480
e-mail: export@baldan.com.br

BALDAN

Avenida Baldan, 1500
Nova Matão
15.993-900
Matão/SP - Brasil
sac@baldan.com.br
export@baldan.com.br

+55 16 3221 6500
baldan.com.br