Instruction Manual

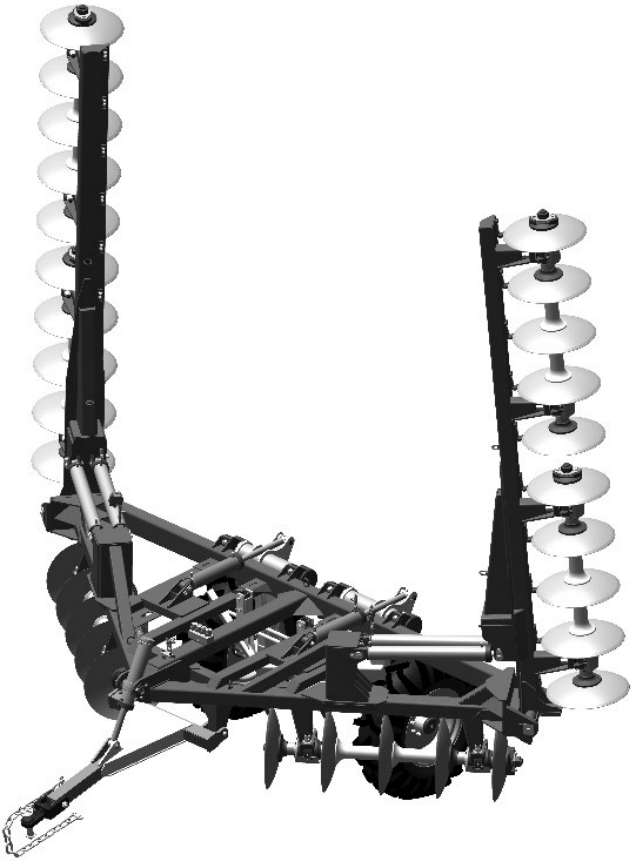

TACR-A

Remote Control Terracing Plough Articulated

BALDAN

▪ Presentation

We appreciate the preference and would like to congratulate you for the excellent choice you just made, since you have acquired a product manufactured with **BALDAN IMPLEMENTOS AGRÍCOLAS S/A** technology.

This manual will guide you through the procedures required since its acquisition until operational procedures of usage, safety and maintenance.

BALDAN assures that it has delivered this implement for resale in full and in perfect conditions.

Resale was responsible for the custody and maintenance during the period in its possession, and also for the assembly, retightening, lubrication and overhaul.

During the technical delivery, dealer should guide the user regarding maintenance, safety, their obligations in eventual technical assistance, strict compliance with the warranty term and reading the instructions manual.

Any technical assistance request while in warranty should be made to the dealer from whom you have purchased it.

We reiterate the need for a careful read of the warranty certificate and compliance of all items from this manual, because by doing so you will increase the life of your device.

Instruction Manual

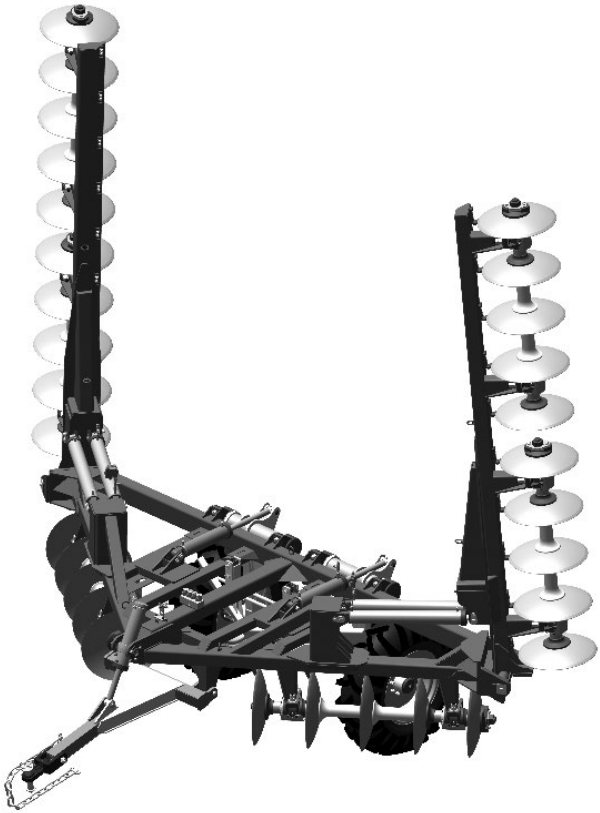

TACR-A

Remote Control Terracing Plough Articulated

BALDAN IMPLEMENTOS AGRÍCOLAS S/A.
CNPJ: 52.311.347/0009-06
Insc. Est.: 441.016.953.110

Scan the QR Code on the identification plate of your device and access this Instruction Manual online.

BALDAN

Index

BALDAN WARRANTY **07**

GENERAL INFORMATION **08**

To the owner *08*

SAFETY RULES **9**

To the operator ..... *9 - 13*

WARNINGS ..... **14 - 15**

COMPONENTS **16**

TACR-A - Remote Control Terracing Plough Articulated *16*

DIMENSIONS **17**

TACR-A - Remote Control Terracing Plough Articulated ..... *17 - 18*

SPECIFICATIONS **19**

TACR-A - Remote Control Terracing Plough Articulated *19*

ASSEMBLY **20**

Wrench set *20*

Assembling discs section *21*

Assembly of the disc sections - TACR-A 30 discs *22*

Assembly of the disc sections on the central frame *23*

Assembly of the left side frame on the front frame *24*

Assembly of the disc sections on the left side frame *25*

Assembly of the front and rear wipers *26*

Assembly of the hydraulic cylinder on the left side frame *27*

Assembly of the leveling support *28*

Assembly of the left wheel support *29*

Assembly of the tires *30*

Assembly of coupling head *31*

Assembly of the hydraulic system *32*

Assembly of the TACR-A electronic articulation and lift system *33*

HITCH **34**

Tractor Hitch *34*

LEVELING **35**

Leveling of the terracing plough *35*

ADJUSTMENT **36**

Preparation for transport ..... *36 - 38*

Preparation for work ..... *39 - 41*

Adjustment of the leveling support *42*

OPERATIONS **43**

Operation recommendations *43-44*

Terrace construction *45*

Terrain slope *46*

Number of passes *46*
Terrace finishing *46*
Bench terrace construction *47*
MAINTENANCE **48**
Tire pressure *48*
Lubrification *49*
Lubrification every 24 hours of work ..... *50 - 51*
Lubrification every 60 hours of work *51*
Lubrification of grease bearings *52*
Lubrification of oil bearings *52*
Operational maintenance *43*
Care *54*
General cleaning *55*
Conservation of the terracing plough *55-56*
LIFTING **57**
Lifting points *57*
OPTIONAL **58**
Optional accessories *58*
IDENTIFICATION **59**
Identification plate *59*
Product identification *60*
NOTES **61**
CERTIFICATE **62**
Certificate of warranty *62-68*

▪ Baldan Warranty

BALDAN IMPLEMENTOS AGRÍCOLAS S/A ensures the dealer normal performance of the implement for a period of six (6) months as of the delivery date on the retail invoice to the first final consumer.

During this period, **BALDAN** undertakes to repair defects in material and/or of manufacture of its liability, including labor, freight and other expenses of the dealer's liability.

In the warranty period, request and replacement of eventual defective parts shall be made to the dealer of the area, who will submit the faulty piece to **BALDAN** analysis.

When this procedure is not possible and the resolving capacity of the dealer is exhausted, the dealer will request the support of **BALDAN** Technical Assistance through a specific form distributed to dealers.

After analyzing the replaced items by **BALDAN** Technical Assistance, and concluding that it is not a warranty, then the dealer will be responsible for the costs related to the replacement; as well as material expenses, travel including accommodation and meals, accessories, lubricant used and other expenses arising from the call out to Technical Assistance, and **BALDAN** company is authorized to carry the respective invoice in the name of the resale.

Any repairment carried in the product within the dealer warranty deadline will only be authorized by **BALDAN** upon previous budget presentation describing parts and workforce to be executed.

The product is excluded from this term if it is repaired or modified by representatives not belonging to the **BALDAN** dealer network, as well as the application of non-genuine parts or components to the user's product.

This warranty is void where it is found that the defect or damage is caused by improper use of the product, failure to follow instructions or inexperience of the operator.

It is agreed that this warranty does not cover tires, polyethylene tanks, cardan, hydraulic components, etc., which are equipment guaranteed by their manufacturers.

Manufacturing and/or material defects, object of this warranty term, will not constitute, under any circumstances, grounds for termination of a purchase agreement, or for indemnification of any nature.

BALDAN reserves the right to change and/or perfect the technical characteristics of its products, without previous notice, and without obligation to proceed in the same way with the products previously manufactured.

General Information

• To the owner

BALDAN IMPLEMENTOS AGRÍCOLAS S/A is not responsible for any damaged caused by accident due to usage, transportation, or in the improper or incorrect transportation of its implement, whether by negligence and/or inexperience of any person.

Only people with complete knowledge of the tractor and the implement should carry their transportation and operation.

BALDAN is not responsible for any damaged caused in unpredictable or unrelated situations to the normal use of the implement.

The incorrect handling of this equipment may result in severe or fatal accidents. Before running the equipment, carefully read the instructions contained in this manual. Make sure that the person responsible for the operation is instructed as the correct and safe handling. Also make sure that the operator has read and understood the instructions manual of the product.

ATTENTION

NR-31 - SAFETY AND HEALTH AT WORK IN AGRICULTURE, LIVESTOCK FARMING, FORESTRY, FOREST EXPLORATION AND AQUACULTURE.

This Regulatory Standard has the purpose of establishing precepts to be observed in the organization and work environment, compatible to the planning and development of agriculture, livestock, forestry, forest exploitation and aquaculture with safety and health and work environment.

MR. OWNER OR OPERATOR OF THE EQUIPMENT.
Read and carefully comply with provisions of NR-31.

For more information, refer to the site and read NR-31 in full.
http://portal.mte.gov.br/legislacao/normas-regulamentadoras-1.htm

▪ Safety rules

• To the operator

THIS SYMBOL INDICATES IMPORTANTE SAFETY WARNING. IN THIS MANUAL, WHENEVER YOU FIND IT, READ THE FOLLOWING MESSAGE CAREFULLY AND PAY ATTENTION TO THE POSSIBILITY OF PERSONAL ACCIDENTS.

ATTENTION

Carefully read the instructions manual tolearn about the recommended safety practices.

ATTENTION

Only start to operate the tractor when you are properly seated and with the seat belt locked.

ATTENTION

Do not transport people on the tractor or over the equipment.

ATTENTION

There are risks of severe injuries due to tipping when working in sloped terrains. Do not over speed.

ATTENTION

Do not work with the tractor if the front has insufficient ballast to the rear equipment. Should there be a trend to lift, add weights or ballasts to the front or the front wheels.

ATTENTION

Before performing any maintenance in your equipment, make sure it is properly stopped. Avoid being run over.

Safety rules

ATTENTION

FOLLOW ALL RECOMMENDATIONS, WARNINGS AND SAFE PRACTICES RECOMMENDED IN THIS MANUAL, UNDERSTAND THE IMPORTANCE OF YOUR SAFETY. ACCIDENTS MAY LEAD TO DISABILITY OR INCLUDING DEATH. REMENBER, ACCIDENTS CAN BE AVOIDED!

ATTENTION

Do not perform adjustments while TACR-A running. When performing any service on TACR-A, switch off the tractor first. Use appropriate tools.

ATTENTION

When searching for a possible leakage on the hoses, use a piece of cardboard or wood, never use your hands. Avoid fluid incision into the skin.

ATTENTION

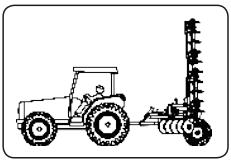

Be careful and cautious when transporting the TACR-A. Transport it slowly

ATTENTION

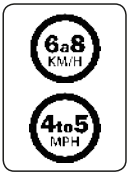

When working with TACR-A, do not exceed 6 to 8 Km/h or 4 to 5 MPH, to avoid damage and accident risks.

ATTENTION

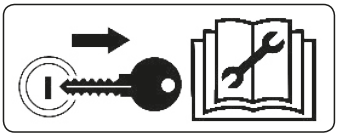

Remove the ignition key before performing any type of maintenance in TACR-A.
Protect yourself against possible injuries or death caused by TACR-A unexpected start-up.
Do not start up the tractor if TACR-A is not properly coupled.

ATTENTION

Hydraulic oil works under pressure and may cause serious injuries if there are any leakages.
Periodically check hoses for conservation. If there are any sign of leakage, replace them immediately.
Before connecting or disconnecting hydraulic hoses, relief system pressure by activating the command with the tractor power switched off.

Safety rules

ATTENTION

Always maintain places of access and work free of residues such as oil or grease to prevent accidents.

ATTENTION

Before working on or transporting the TACR-A, check for people or obstructions near the machine.

ATTENTION

Avoid heating parts near the fluid lines.
Heating may generate fragility in the material, rupture and exit of the pressurized fluid, causing burns and injuries.

ATTENTION

Keep the articulation area free while the TACR-A is in operation. In closed curves, prevent tractor wheels from touching the head.

ATTENTION

Never weld the wheel mounted with tire, the heat may cause air pressure increase and provoke the explosion of the tire.
When filling the tire, position yourself besides the tire, never in front of it. To inflate a tire, always use a containment device (inflation cage).

ATTENTION

Always stay away from the active elements of the TACR-A (discs), as they are sharp and may cause accidents.
When performing any service in the discs, use safety gloves on the hands.

ATTENTION

Dispose residues inappropriately affects the environment and the ecology since you will be polluting rivers, canals or the soil.
Inform yourself about the proper way of recycling or disposing residues.

PROTECT THE ENVIRONMENT!

▪ Safety rules

⚠ ATTENTION

Be careful when driving or working with the TACR-A under power lines, low tree branches, and other high obstructions, avoiding serious injury or even death.
Before transporting the TACR-A, thoroughly evaluate the location.

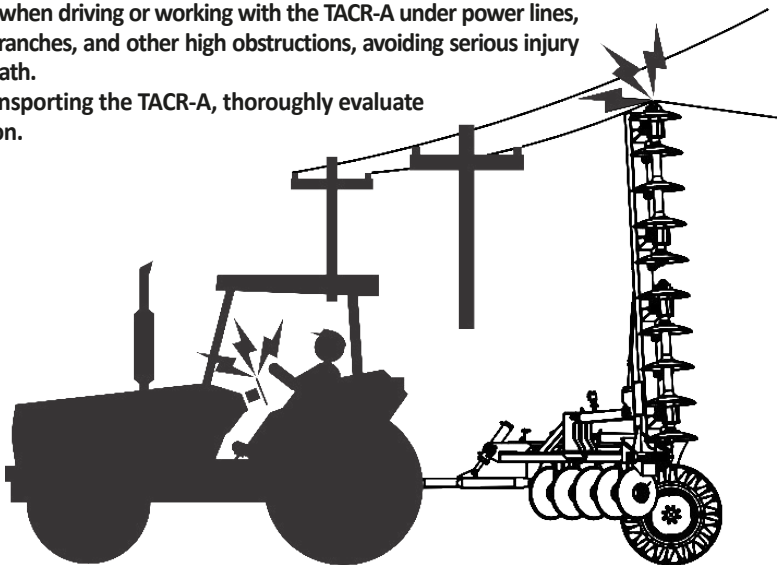

⚠ ATTENTION

DO NOT allow people to stand under or within the side frames or their action area as there is a risk or serious accidents or death from mechanical or hydraulic failure.

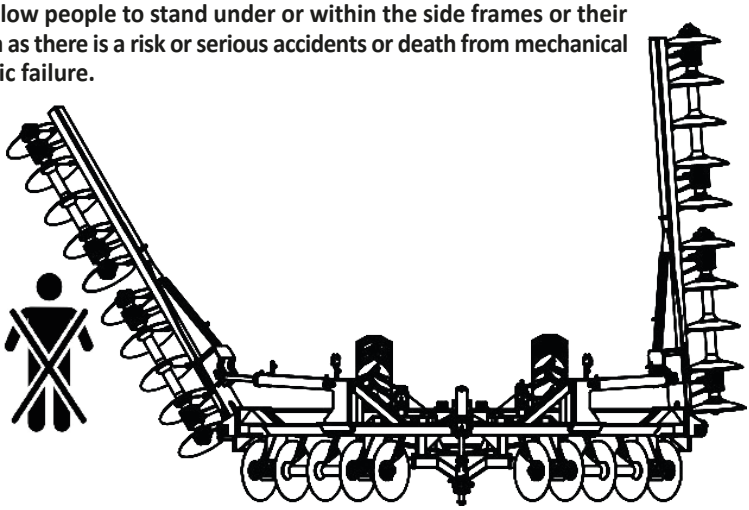

▪ Safety rules

- **PPE Equipament**

ATTENTION | **DO NOT WORK WITH TACR-A WITHOUT FIRST WEARING PPES (SAFETY EQUIPMENT). IGNORING THIS WARNING MAY CAUSE DAMAGES TO HEALTH, SEVERE ACCIDENTS OR DEATH.**

When performing certain procedures with the **TACR-A**, place the following Safety Equipment (PPE) below:

IMPORTANT

The safety practice must be performed in all stages of working with the TACR-A, thus avoiding accidents such as impact of objects, fall, noise, cuts and ergonomics, ie the person responsible for operating the TACR-A is subject to internal and external damage to your body.

OBSERVATION | **All PPEs (Safety Equipment) should have certificate of authenticity.**

▪ Warnings

⚠ When operating with the TACR-A, do not let people stand near to or on the machine.

⚠ When performing any maintenance service, use PPEs equipment.

⚠ Before connecting or disconnecting the hydraulic hoses, relief the system pressure by activating the control with the tractor power switched off.

⚠ Periodically check the conservation status of the hydraulic hoses. If there are indications of oil leakage, replace the hose immediately, because the oil works under high pressure and may cause severe accidents.

⚠ Do not wear loose clothing, as it may get caught in the TACR-A.

⚠ When starting the tractor's engine, be properly seated in the operator's seat and be fully aware of how to correctly and safely handle both the tractor and the TACR-A. Always put the gear shift in neutral position, unplug the power take-off gear switch and place the hydraulic controls in neutral position.

⚠ Do not start the engine in a closed environment or with no proper ventilation since the exhaust gases are harmful to health.

⚠ When maneuvering the tractor to couple TACR-A, make sure you have the necessary space ant that there is no one too close, always maneuver at low gear and be prepared to brake in an emergency.

⚠ In closed curves, prevent tractor wheels from touching the TACR-A's head.

⚠ Do not perform adjustments while the TACR-A is in operation.

⚠ When working in sloped terrains, proceed with precautions, always trying to maintain the required stability. In case of imbalance, reduce acceleration, turn the wheels to the slope side of the terrain and never lift the TACR-A.

⚠ Always drive the tractor at speeds compatible to safety, especially during works in bumpy terrains or slopes, keep the tractor always engaged.

⚠ When driving the tractor in highways, keep the brake pedals interconnected.

⚠ Do not work with a tractor with a light rear. If its front tends to raise, add weights or ballasts to the front of the tractor or to its front wheels.

⚠ When leaving the tractor, put the gear lever in neutral position and apply the parking brake. Never leave the TACR-A hitched to the tractor when its hydraulic system is in the raised position.

⚠ All maintenance on the TACR-A must be carried while it is parked and with the tractor switched off.

⚠ Do not travel on highways especially at night. Use warning signs throughout the route.

⚠ If you need to travel on higways with the TACR-A, consult the transit authorities.

⚠ Do not allow untrained people to use the TACR-A, that is, people who do not know how to operate it correctly.

⚠ Do not transport or work with the TACR-A near obstacles, rivers or, streams.

▪ Warnings

⚠ The transportation of people on self-propelled machines and implements is forbidden.

⚠ Changes in the original features of the TACR-A are not allowed, as they may change safety, operation, and useful life characteristics oh the TACR-A.

⚠ Please read all safety information contained in this manual and the TACR-A carefully.

⚠ Read or explain all the procedures of this manual to the operator who cannot read.

⚠ Always check that the TACR-A is in perfect condition. In the event an irregularity that may interfere with the operation of the TACR-A, provide for its proper service prior to any work or transport.

⚠ Maintenance and specially inspection in risk areas of the TACR-A must be carried out only by qualified or trained workers, observing all safety guidelines. Before maintenance, disconnect all TACR-A drive systems.

⚠ Periodically check all TACR-A components before using it.

⚠ Due to the equipament used and work conditions on field or in maintenance areas, precautions are required. Baldan does not have direct control over precautions, therefore, it os the owner's responsibility to put into practice the safety procedures while working with the TACR-A.

⚠ Check the minimum power of the tractor recommended for each model of TACR-A. Only use tractor with compatible power and ballast.

⚠ When transportating the TACR-A, travel at terrain-compatible speeds and never exceed 10 Km/h, as this reduces maintenance and therefore extends the life of the TACR-A.

⚠ Alcoholic beverage or some medications may cause loss of reflexes and change the operator's physical conditions. Therefore, never operate TACR-A under the influence of any of these substances.

⚠ Read or explain all the procedures above to users that cannot read.

In case of doubts, refer to Post-Sales.
Telephone: 0800-152577 / E-mail: posvenda@baldan.com.br

▪ Components

• TACR-A - Remote Control Terracing Plough Articulated

1. Front frame
2. Right side frame
3. Left side frame
4. Oil distributor
5. Selective block
6. Wheel support
7. Tire
8. Wheel lift cylinder
9. Frame lift cylinder
10. Bearing
11. Reel
12. Wiper
13. Disc
14. Hook shackle
15. Coupling head
16. Head lift cylinder
17. Hydraulic hoses
18. Wrenches
19. Safety chain

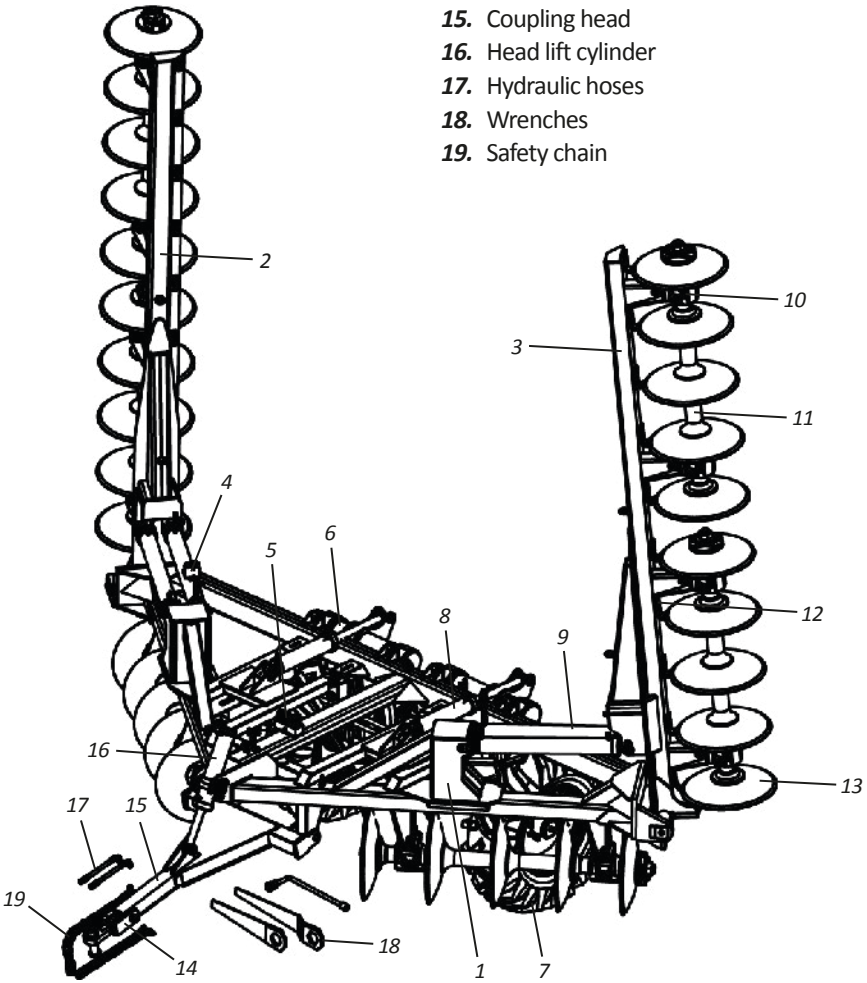

▪ Dimensions

- TACR-A - Remote Control Terracing Plough Articulated (Part I)

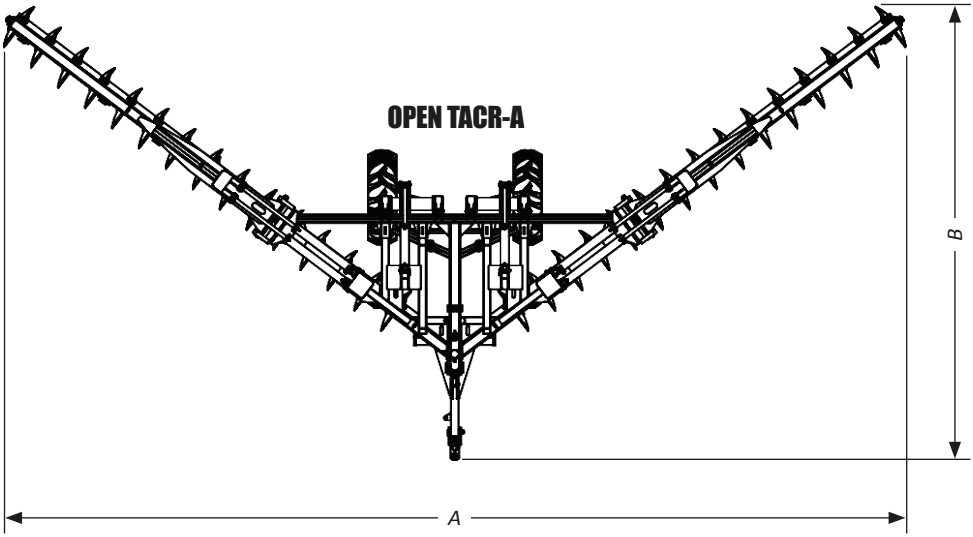

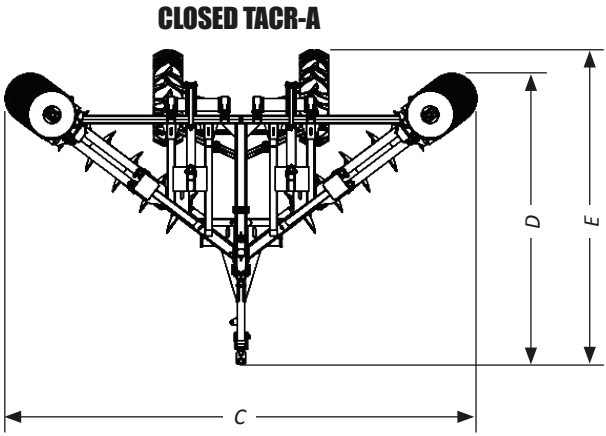

Model	Nr of Discs	Measurements				
		A (mm)	B (mm)	C (mm)	D (mm)	E (mm)
TACR-A	30	12001	6037	6236	3832	4135

Dimensions

- TACR-A - Remote Control Terracing Plough Articulated (Part II)

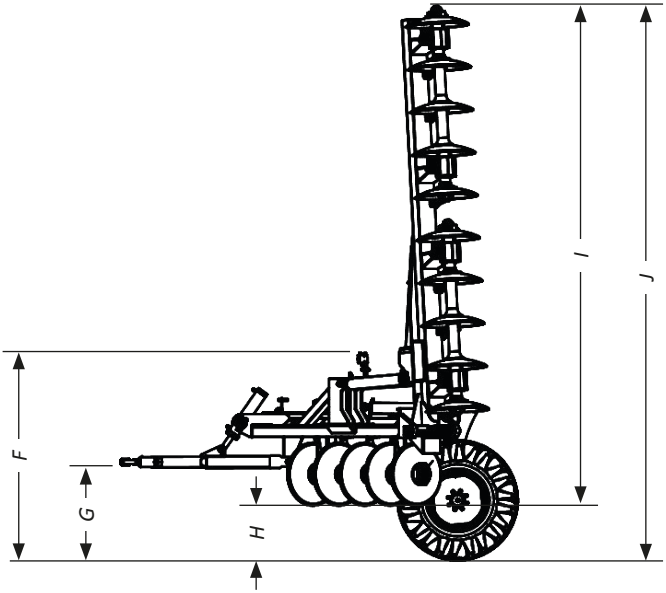

CLOSED TACR-A

Model	Nr of Discs	Measurements				
		F (mm)	G (mm)	H (mm)	I (mm)	J (mm)
TACR-A	30	2176	1000	575	5221	5796

▪ Specifications

• TACR-A - Remote Control Terracing Plough Articulated

Model	Nr of Discs	Working Width (m)	Disc Spacing (mm)	Approximate Weight (Kg)	Tractor Power 4x4 (HP)
TACR-A	30	6,00 x 1,30 ou 12,00	450	5202	170 and above

Disc diameter (ø) ..... 26"
Shaft diameter (ø) ..... 2.1/4"
Wheelset ..... Single

Baldan reserves the right to change and/or perfect the technical characteristics of its products, without previous notice, and without obligation to proceed in the same way with the products previously manufactured. Technical specifications are approximate and informed under normal work conditions.

INTENDED USED OF THE TACR-A

- The **TACR-A** is designed for bench terrace construction, dismissing virtually all costly and high maintenance machines like crawler tractors, motor graders, and wheel loaders. Another advantage of the **TACR-A** is the construction of 12-meter wide base terraces by lowering its 2 sides.
- The **TACR-A** must be driven and operated by a properly instructed operator.

PROHIBITED USE OF THE TACR-A

- To avoid damage, serious accidents, or death, DO NOT transport people on any part of the **TACR-A.**
- It is NOT allowed to use **TACR-A** to couple, tow, or push other implements or accessories.
- The **TACR-A** should NOT be used by an inexperienced operator who does not knows all the driving, command, and operation techniques.

▪ Assembly

The **TACR-A** leaves the factory disassembled. To assembly it, follow the instructions below:

⚠ The **TACR-A** must be assembled by the resale, through people trained, instructed, and qualified for this work.

⚠ Before assembling the **TACR-A**, find a proper place for easy identification and assembly of its parts.

⚠ Do not wear loose clothing, as they may get caught in the **TACR-A**.

⚠ Use PPE (Safety Equipment).

• Wrench set

When assembling, disassembling, or maintaining the **TACR-A**, use the wrench set provided with the terracing plough. The wrench set consists of:

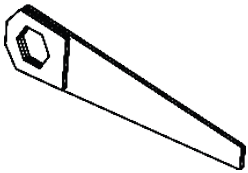

SMALL WRENCH FOR 2.1/4" AND 2.1/2" HEX NUT

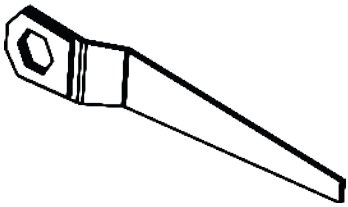

BIG WRENCH FOR 2.1/4" AND 2.1/2" HEX NUT

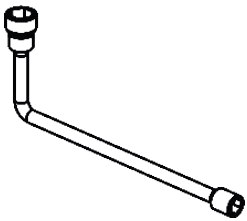

L-WRENCH FOR 5/8" AND 1" HEX NUT

⚠ ATTENTION | **If any wrench is lost or broken, get another one immediately. Always use original Baldan wrenches.**

▪ Assembly

• Assembling discs section

When assembling the **TACR-A**, always start with its disc section, proceeding as follows:

01 - Fit the shaft with (1) the concave thrust washer (2), flat washer (3), lock (4), nut (5), fastening it with the screw (6) and lock washer (7).

02 - Then, fit the shaft with (1) the disc (8), bearing (9), disc (8), reel (10), disc (8), reel (10), disc (8), bearing (9), and disc (8).

03 - When the assembly is complete with all discs, bearings, reels, fit the convex thrust washer (11), flat washer (12), lock (13), nut (14), tightening the assembling with a wrench.

04 - Then, fit the disc assembly and tighten the nut (14) by impacts. When almost obtaining maximum tightness, adjust the lock (13) with the convex washer (11), always tighting the nut until it matches the drilling, fasten it with the screw (15), lock washer (16).

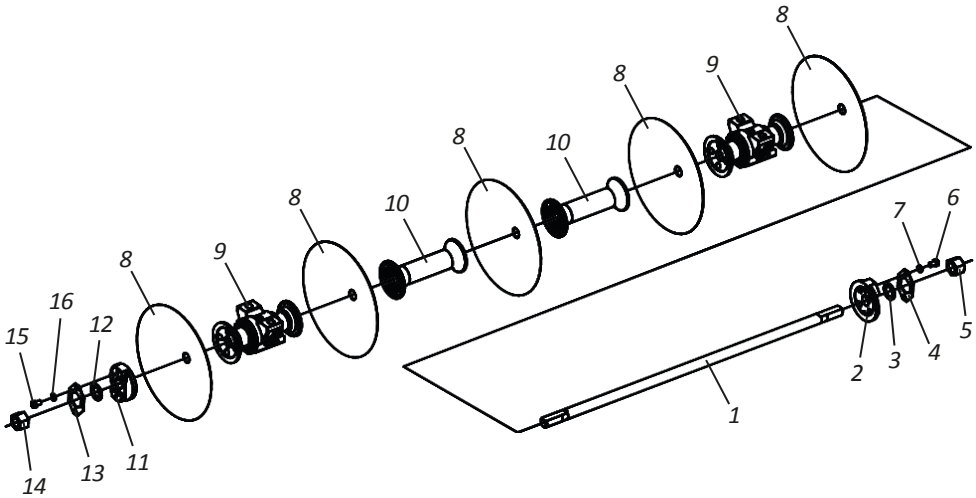

ATTENTION | **Check the right side of reels and bearings according to disc concavity.**

Assembly

• Assemby of the disc sections - TACR-A 30 discs

Seed the assembly of the disc sections of the TACR-A 30 discs bellow.

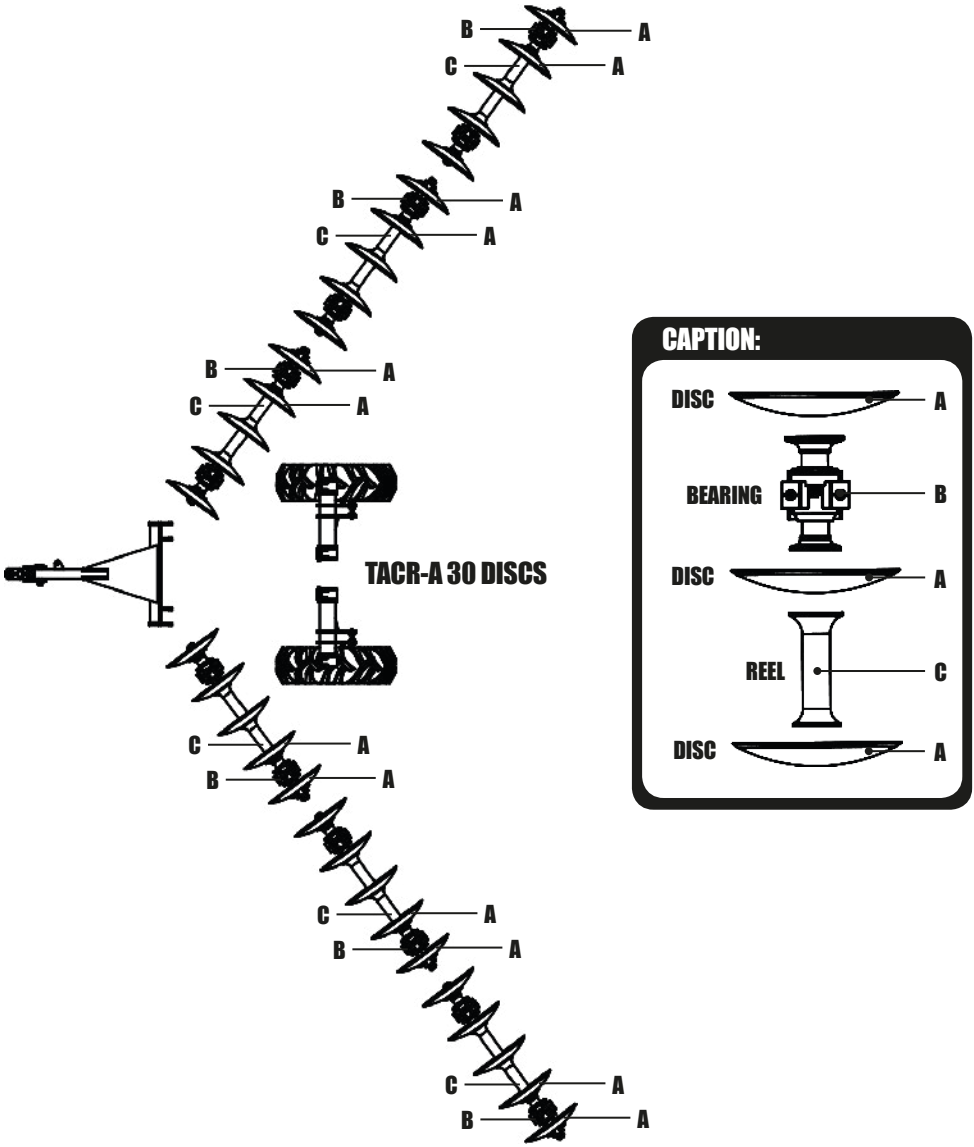

▪ Assembly

• Assembly of the disc sections on the central frame

To assembly the disc sections (1) on the central frame (2), proceed as follows:

01 - Lift one side the central frame (2) and fit the disc section (1) in line and match the drilling of the shoes (3) with the bearings and fasten with screws (4), locks (5) plain washers (6), lock washers (7), and nuts (8).

02 - Then, lift the other side of the central frame (2) and repeat the operation by checking the concavity of the discs from one section to the other, which must be opposing.

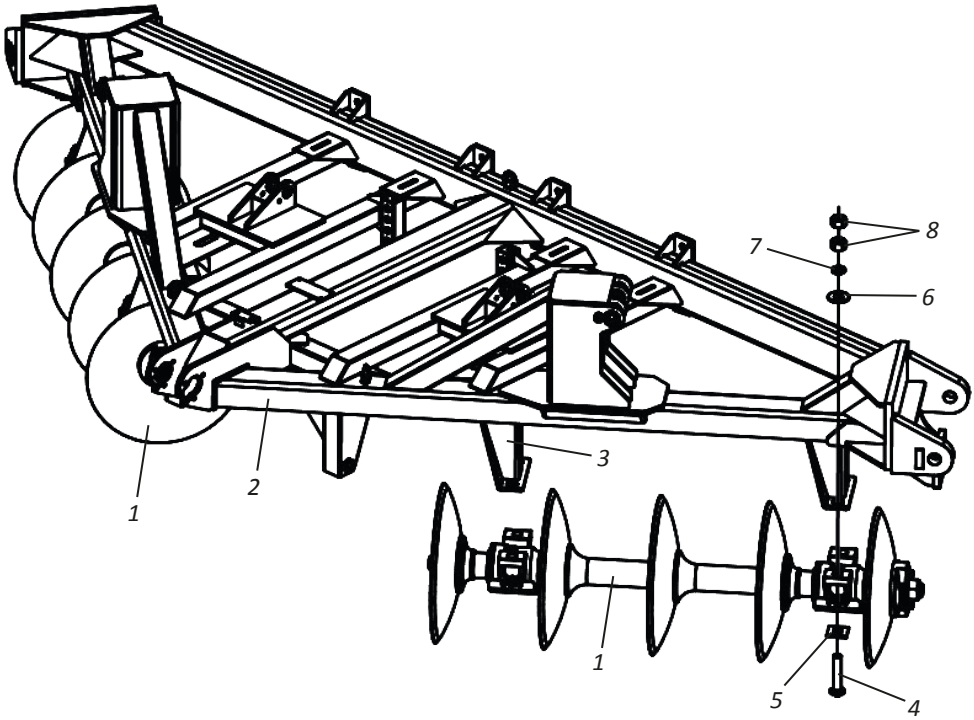

ATTENTION **When assembling the disc sections on the central frame, note that the central frame shoes must face the concavity of the discs.**

▪ Assembly

• Assembly of the left side frame on the front frame

To assembly the left side frame (1) on the front frame (2), proceed as follows:

01 - Connect the left side frame (1) to the central frame (2), fastening through the pin (3) lock washer (4) and nut (5).

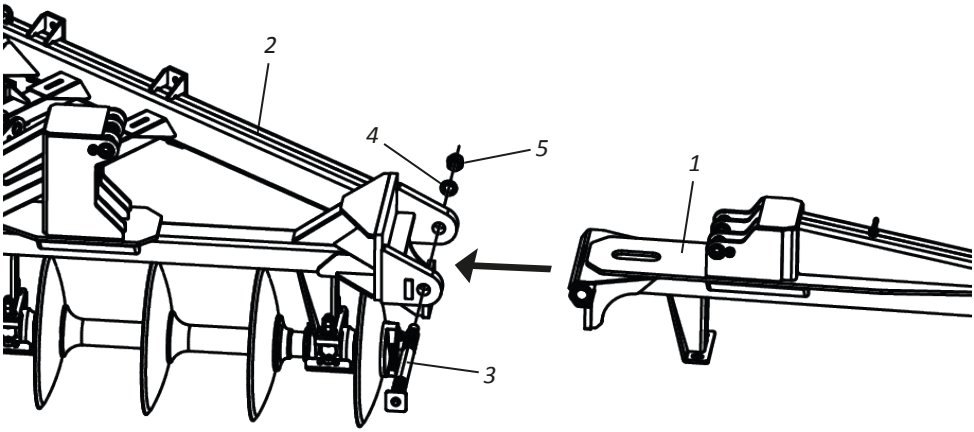

NOTE Repeat the procedure above to assemble the right side frame on the front frame.

▪ Assembly

• Assembly of the disc sections on the left side frame

To assemble the disc sections (1) on the left side frame (2), proceed as follows:

01 - Levante a armação lateral esquerda (2) e coloque a seção de disco (1) em linha e faça coincidir a furação das sapatas (3) com as dos mancais e faça a fixação através dos parafusos (4), travas (5), arruelas lisa (6), arruelas de pressão (7) e porcas (8).

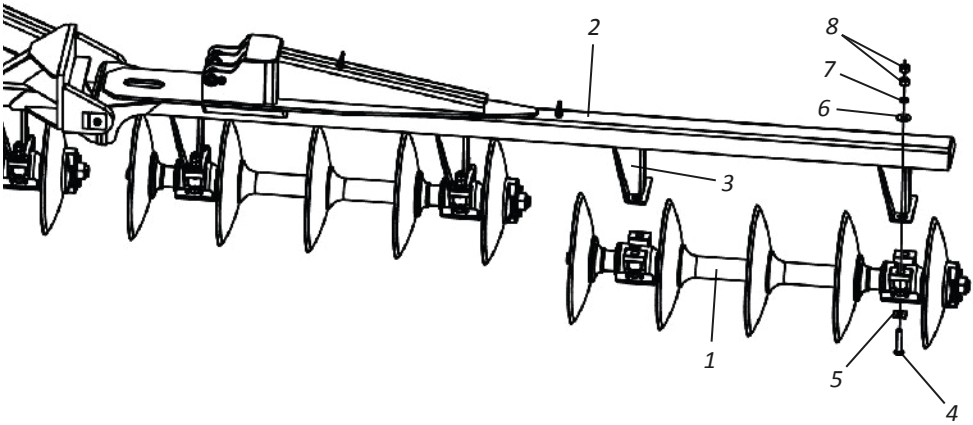

ATTENTION | **When assembling the disc sections on the side frames, note that the side frame shoes should be facing the disc concavity.**

NOTE | **Repeat the procedure above to assemble the disc sections on right side frame.**

▪ Assembly

• Assembly of the front and rear wipers

To assembly the front and rear wipers (1) on the side frames (2), proceed as follows:

01 - Connect the front and rear wipers (1) on the frames (2) fastening through the screws (3), flat washers (4), lock washers (5), and nuts (6).

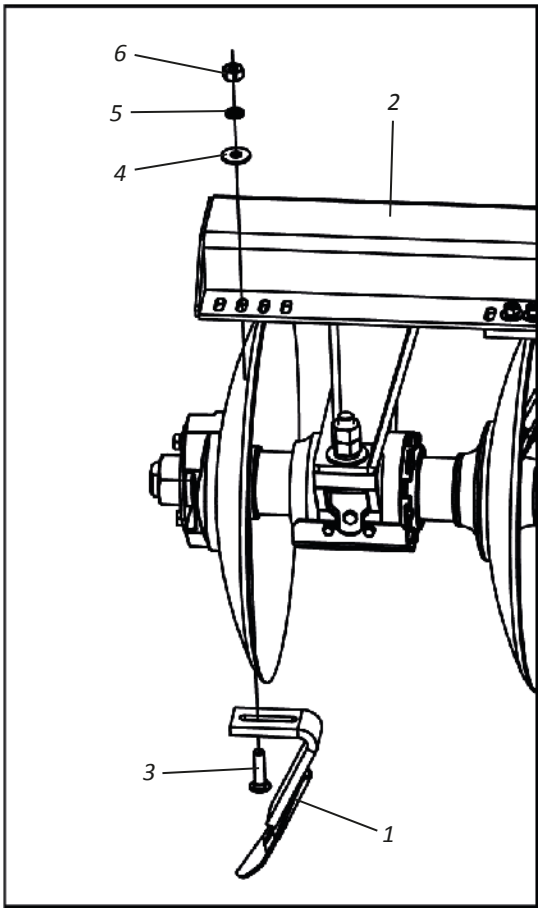

⚠ ATTENTION | **When installing the wipers, they should be 0.5 to 1.0 cm away from the discs.**

▪ Assembly

• Assembly of the hydraulic cylinders on the left side frame

To assemble the hydraulic cylinders (1), proceed as follows:

01 - Connect the bases of the hydraulic cylinders (1) to the central frame (2), fastening through the pins (3), lock washers (4), and screws (5).

02 - Then connect the hydraulic cylinder shafts (1) on the left side frame (6), fastening through the pins (7), lock washers (8), and screws (9).

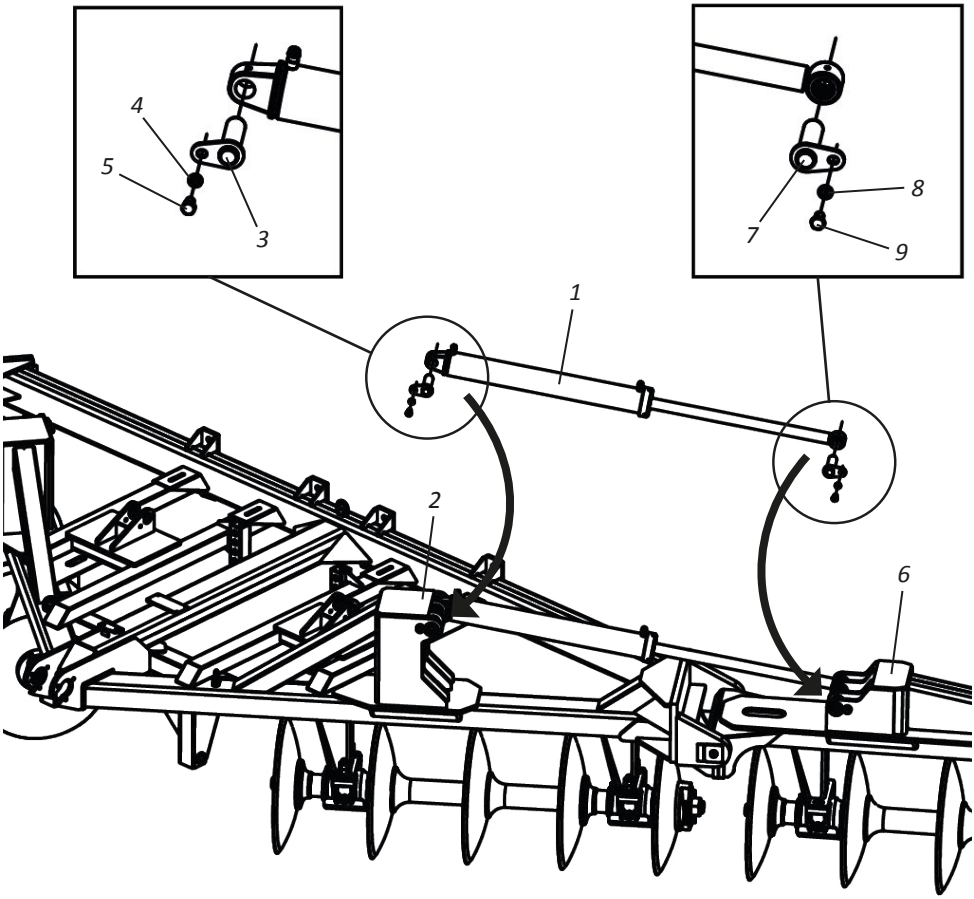

NOTE Repeat the procedure above to assemble the hydraulic cylinders on right side frame.

▪ Assembly

• Assembly of the leveling support

To assembly the leveling support (1), proceed as follows:

01 - Connect the leveling support (1) on the central frame (2), fastening through the pins (3), flat washers (4), and ring pins (5).

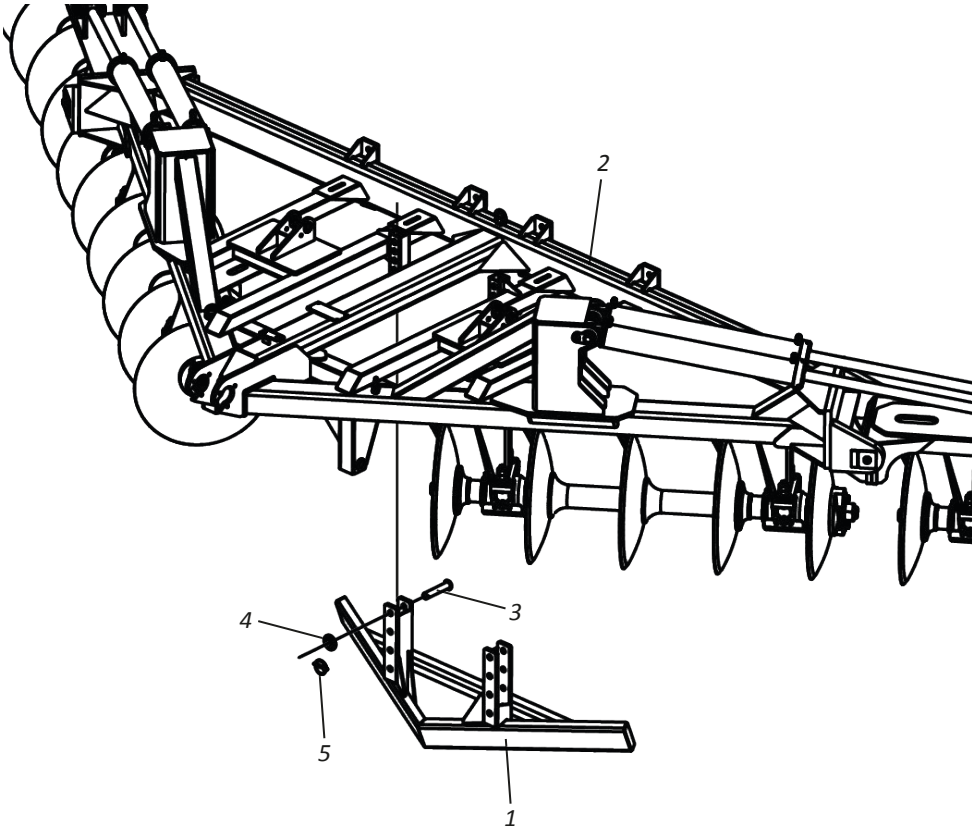

▪ Assembly

• Assembly of the left wheel support

The wheel supports are independent (right and left). To assembly the left wheel support (1), proceed as follows:

01 - Connect the bearings (1) with the felt washers (2) on the left wheel support (3).
02 - The fasten the plates (1) to central frame (4) through the screws (5) and nuts (6).
03 - The connect the base of the hydraulic cylinder (7) to the central frame (4) through the pin (8), lock washer (9), screw (10) and shaft on left wheel support (3), through the pin (11), flat washer (12), and cotter pin (13).

⚠ ATENTION

Wheel supports (right and left) are mounted with the hub facing away from the supports.

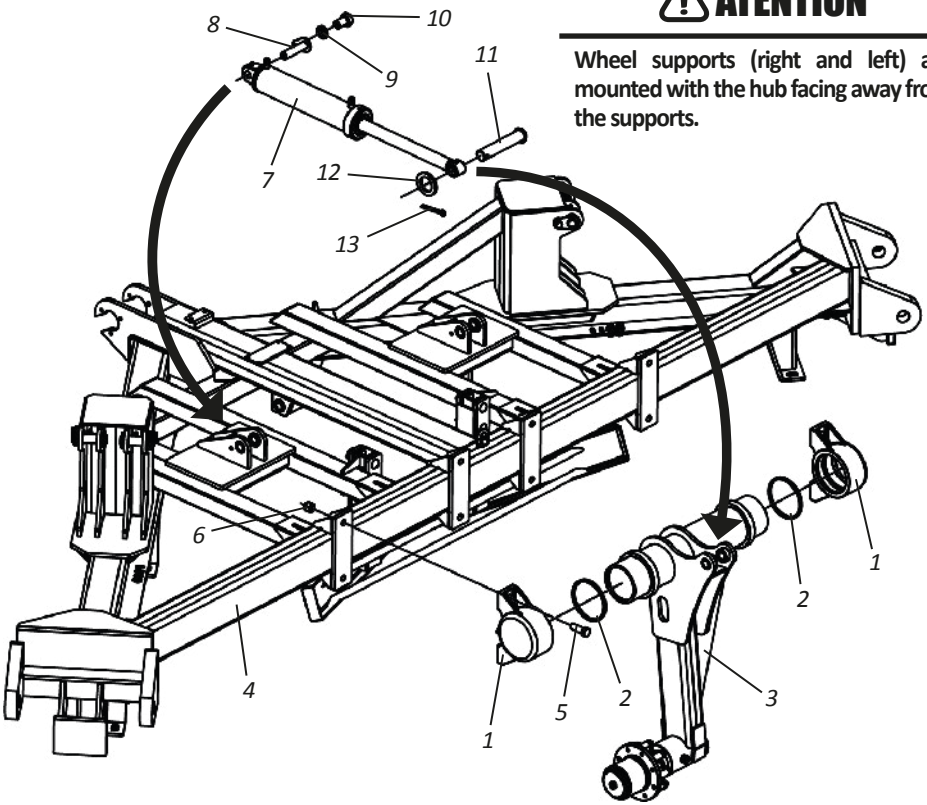

NOTE Repeat the procedure above to assemble the right side frame on the front frame.

▪ Assembly

• Assembly of the tires

To assembly the tires on the wheel support, proceed as follows

01 - Connect the tires (1) on the wheel support (2), fastening through the screws (3), nuts (4) and locknuts (5).

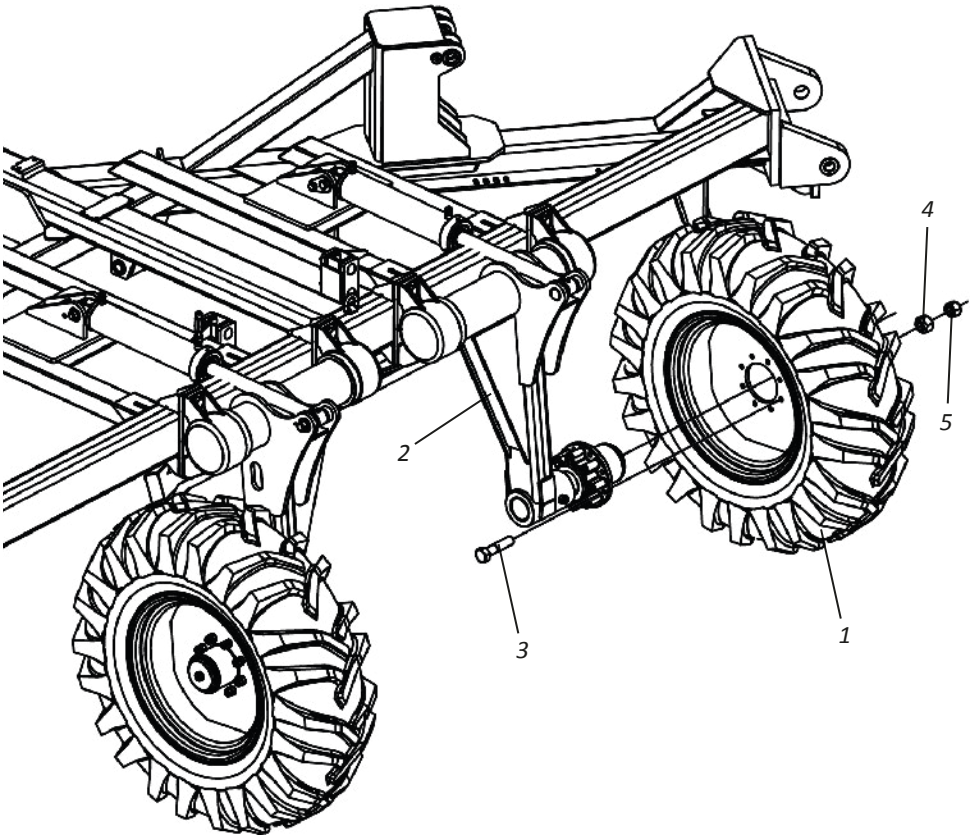

⚠ ATTENTION

Check the correct tire calibration on page 42.

▪ Assembly

• Assembly of coupling head

To assemble the coupling head on the central frame, proceed as follows:

01 - Connect the coupling head (1) to the front frame (2), fastening through the pins (3), plain washers (4), and cotter pins (5).

02 - The connect the base of the hydraulic cylinder (6) to the central frame (2), fastening through the bearings (7), flat washers (8) and screws (9).

03 - Then, attach the hydraulic cylinder shaft (6) on the coupling head (1), fastening through the pin (10), flat washer (11), and cotter pin (12).

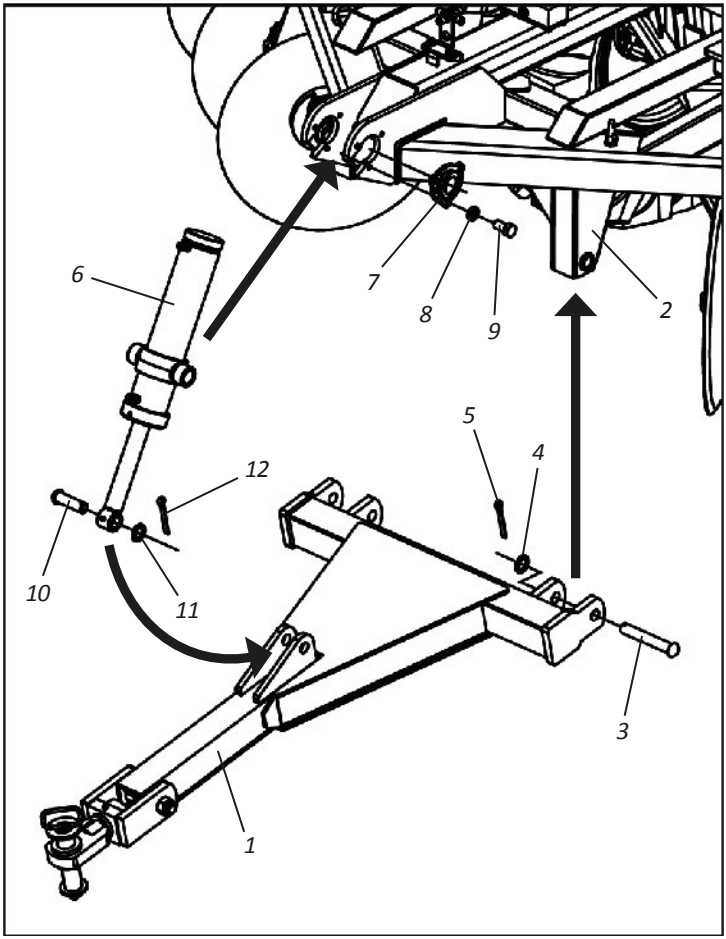

Assembly

- Assembly of the hydraulic system

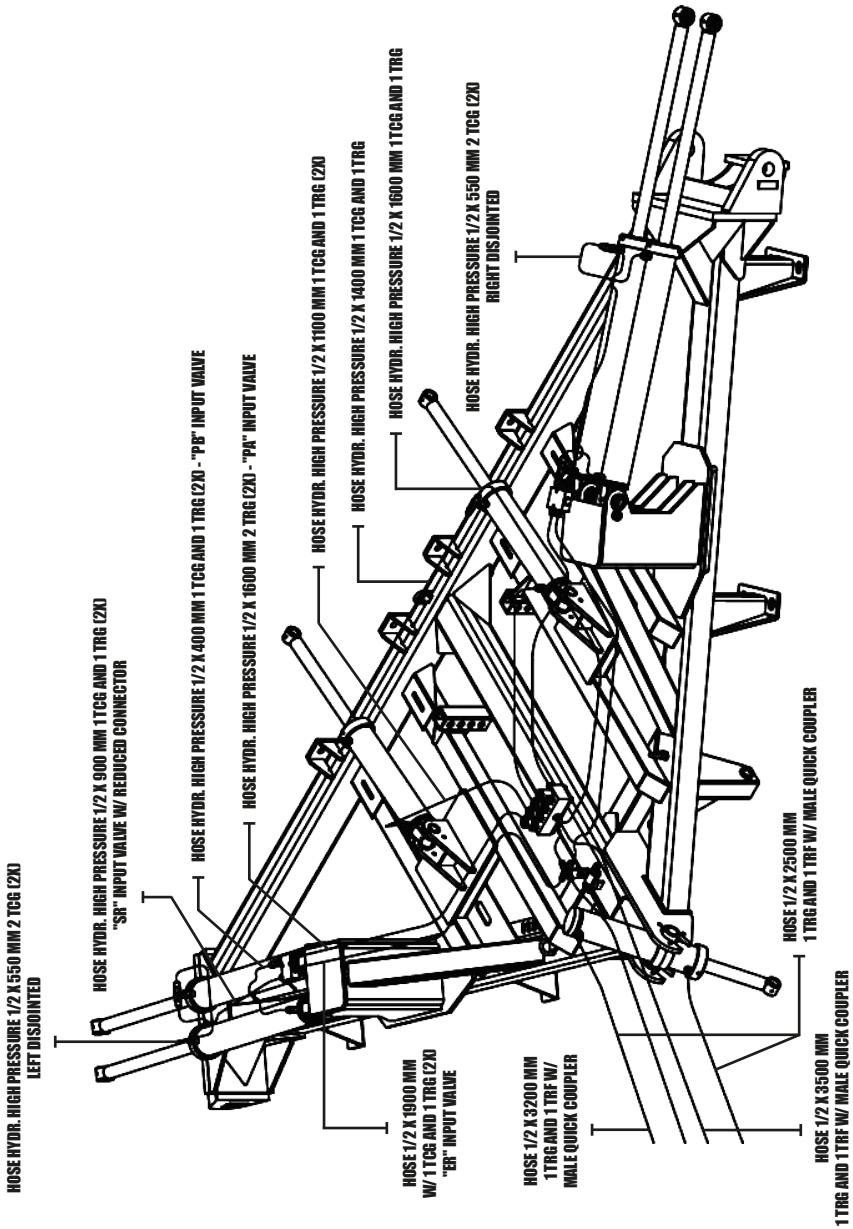

Assembly

- Assembly of the TACR-A electronic articulation and lift system

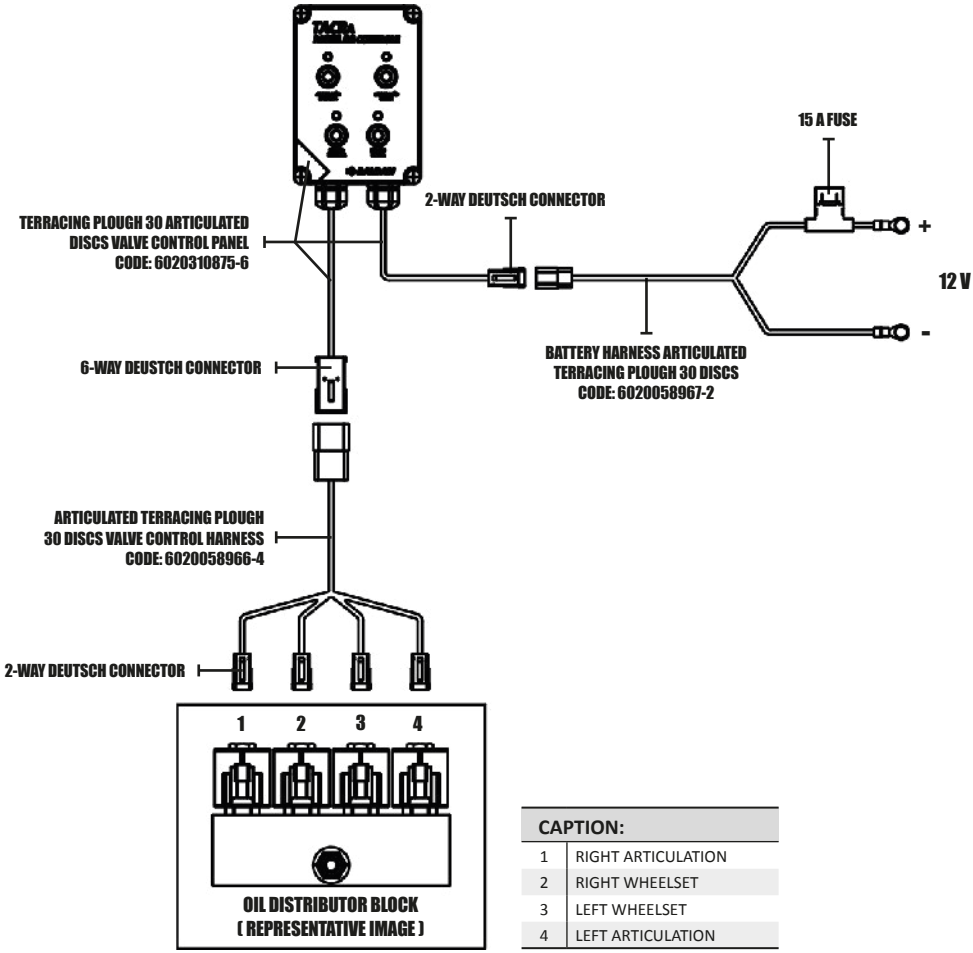

CAPTION:	
1	RIGHT ARTICULATION
2	RIGHT WHEELSET
3	LEFT WHEELSET
4	LEFT ARTICULATION

▪ Hitch

• Tractor Hitch

To connect the **TACR-A** to tractor drawbar, follow the instructions bellow:

- Before hitching the **TACR-A**, look for a sale and easily accessible place.
- Always use low gear with low acceleration.
- Before connecting or disconnecting the hydraulic hoses, stop the engine and relieve the pressure of the circuit by fully operating the control levers.
- When relieving system pressure, make sure that there are no accidents while the equipment is moving.

Observe the instructions above, proceed as follows:

01 - Slowly approach the tractor to the **TACR-A** on reserve, paying attention when to use the brakes.

02 - Then, attach the coupling head (1) to the tractor fastening through the coupling pin (2), flat washer (3), and cotter pin (4).

03 - Then, connect the hoses (5) to the tractor quick hitch.

04 - Finish the coupling of the **TACR-A**, by attaching the safety chain (6) on the tractor.

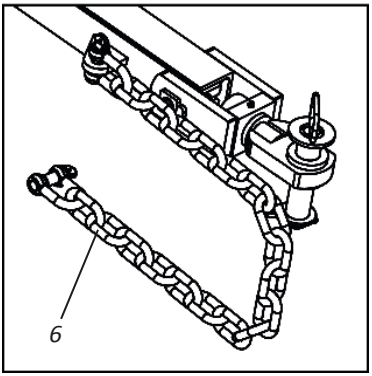

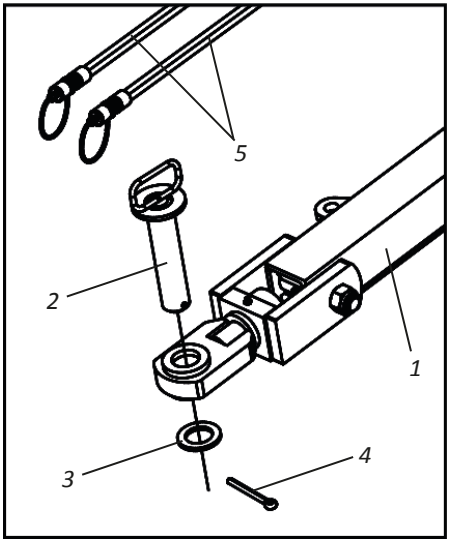

⚠ ATTENTION

The safety chain (6) provides increased safety during work and transport of the TACR-A, preventing it from disconnect from the tractor in case of breakage of the coupling pin (2). Thus, we do not recommend working or transporting the TACR-A without fastening the safety chain (6) first.

▪ Levelling

• Leveling of the terracing plough

To level the **TACR-A**, proceed as follows:

01 - Place the tractor and the **TACR-A** on a plain surface.
02 - Then, lift the tires (1) through the hydraulic cylinders (2).
03 - Then level the **TACR-A** through the cylinder (3) until it reaches the desired level.

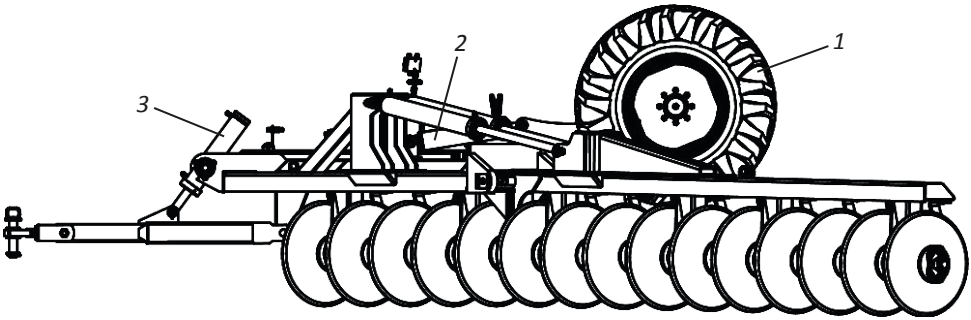

⚠ ATTENTION

The discs must be parallel to the ground, i.e., they all must touch the same plane. On already prepared terrains, the terrace can be started with a slight slope on the disc sections, i.e. with a slightly activated hydraulic cylinder (3).

▪ Adjustment

• Preparating for transport - Part I

Before preparing the **TACR-A** for transport, make sure:

1°) That the **TACR-A** is in the position below.

2°) The all buttons (1 articulation and 2 wheelset) on the control panel (3) are off **(down position)**.

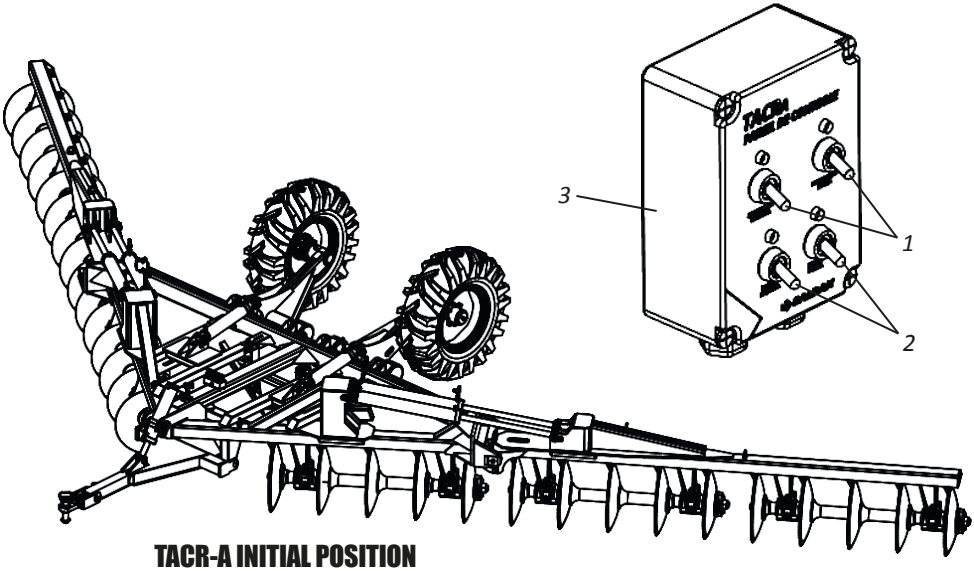

TACR-A INITIAL POSITION

After observing the instructions above, proceed as follows:

01 - Operate the wheelset buttons (2) at the same time **(up position)** to raise the **TACR-A** while it is leveled.

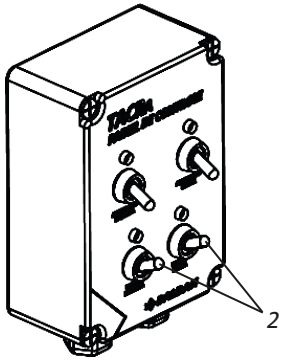

⚠ ATTENTION

Operating the wheelset buttons (2) at the same time (up position) is MANDATORY so that there is no risk of tipping when lifting the TACR-A.

▪ Adjustment

• Preparating for transport - Part II

02 - The, through the tractor lever, activate the hydraulic cylinder (4) of the coupling head (5) to level the **TACR-A**.

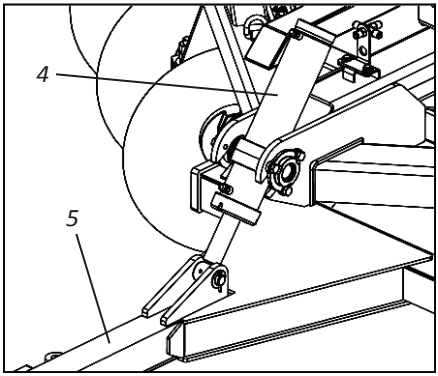

03 - Then turn off the wheelset buttons (2) at the same time **(down position)**.

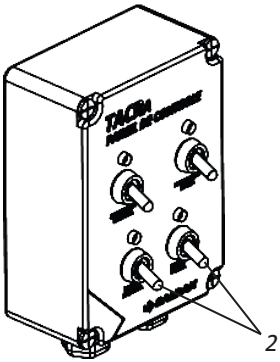

04 - Then press the articulation buttons (1) at the same time **(up position)** to articulate the side frames.

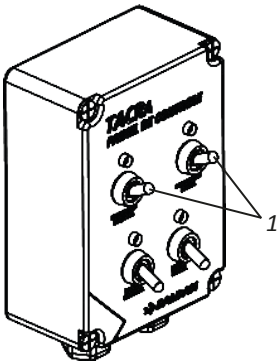

▪ Adjustment

- **Preparating for transport - Part III**

05 - After articulating the side frames, turn off the articulation buttons at the same time **(down position).**

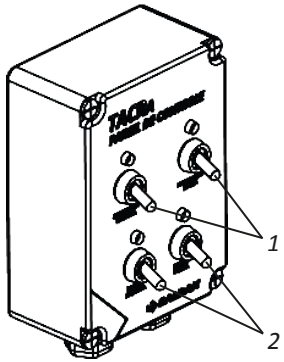

⚠ ATTENTION

After the frame are articulated, DO NOT operate any of the wheelset buttons (2) so that there is no risk of tipping over the TACR-A.

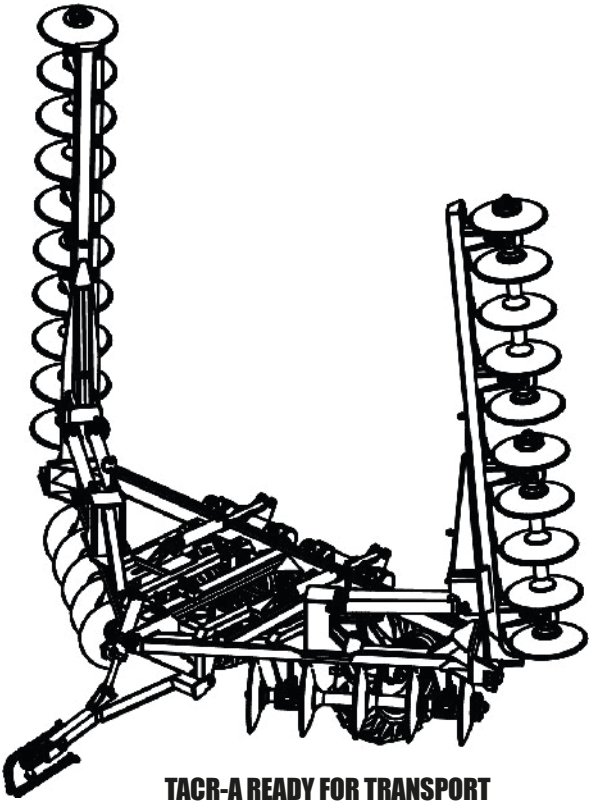

TACR-A READY FOR TRANSPORT

▪ Adjustment

• Preparation for work - Part I

Before preparating the **TACR-A** for work, make sure:

1°) That the **TACR-A** is in the position below.

2°) That all buttons (1 articulation and 2 wheelset) on the control panel (3) are off **(down position)**.

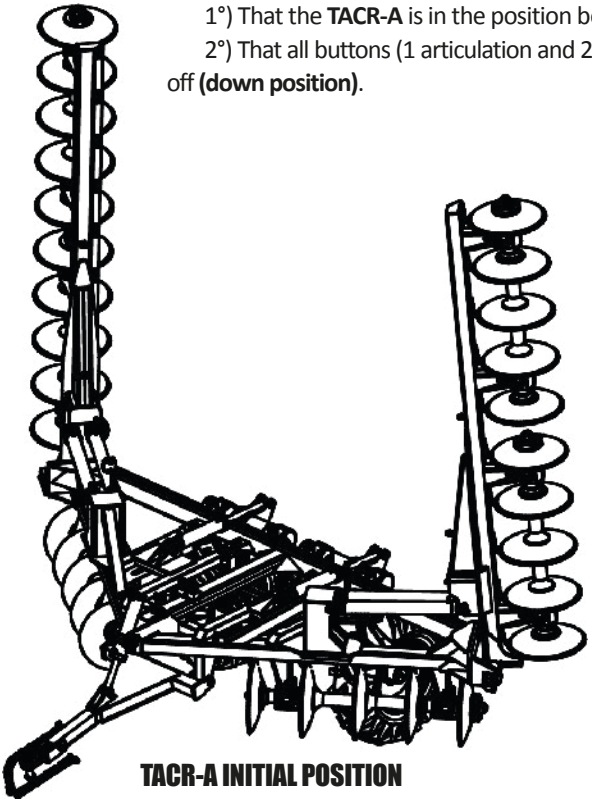

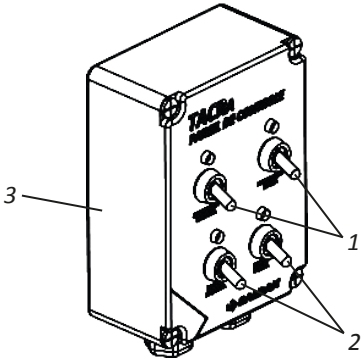

TACR-A INITIAL POSITION

After observing the instructions above, proceed as follows:

01 - Operate the articulation buttons (1) at the same time **(up position)** to lower the side frames.

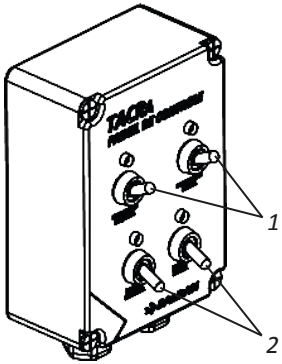

⚠ ATTENTION

Before articulating the frames, DO NOT operate nay of the wheelset buttons (2) so that there is no risk of tipping over the TACR-A.

▪ Adjustment

• Preparation for work - Part II

02 - After lowering the side frames, turn off the articulation buttons (1) at the same time **(down position).**

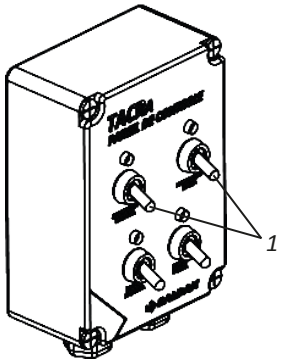

03 - Then operate the wheelset buttons (2) at the same time **(up position)** to lower the **TACR-A** while it is leveled.

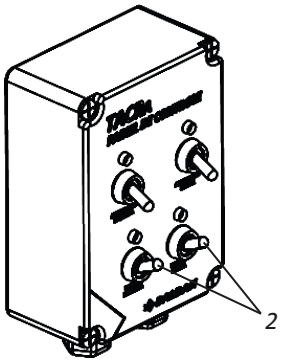

⚠ ATTENTION

Operating the wheelset buttons (2) at the same time (up position) is MANDATORY so that there os no risk of tipping when lifting the TACR-A.

04 - The turn off the wheelset buttons (2) at the same time **(down position)**.

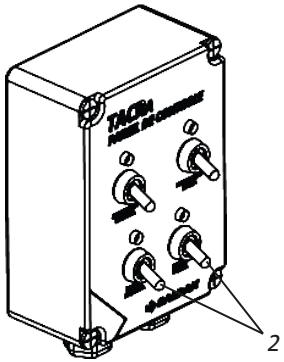

▪ Adjustment

• Preparation for work - Part III

05 - Then, through the tractor lever, activate the hydraulic cylinder (4) of the coupling head (5) to level the **TACR-A**.

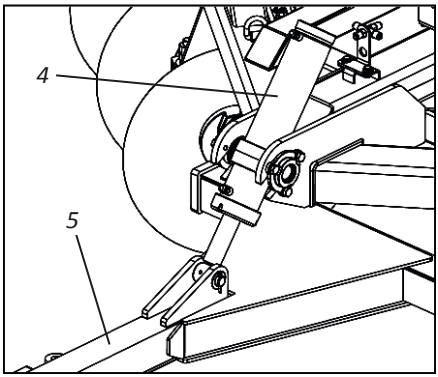

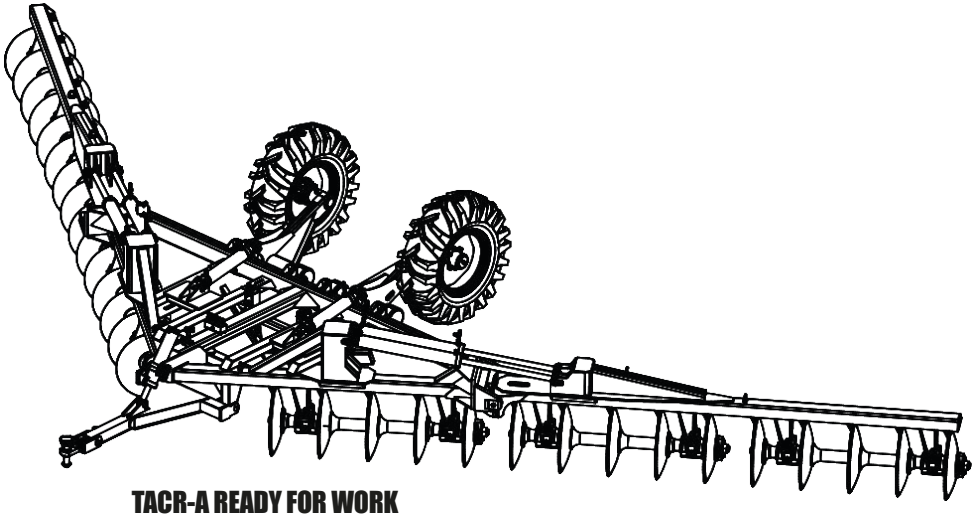

TACR-A READY FOR WORK

▪ Adjustment

• Adjustment of the leveling support

To adjust the leveling support, proceed as follows:

01 - Remove the pin rings (1), flat washwers (2), and the pins (3).
02 - Then move the leveling support (4) in the center frame adjustments (5) adjusting the leveling support (4) according to your work needs.
03 - Then, fit the pins (3), flat washers (2), and pin rings (1).

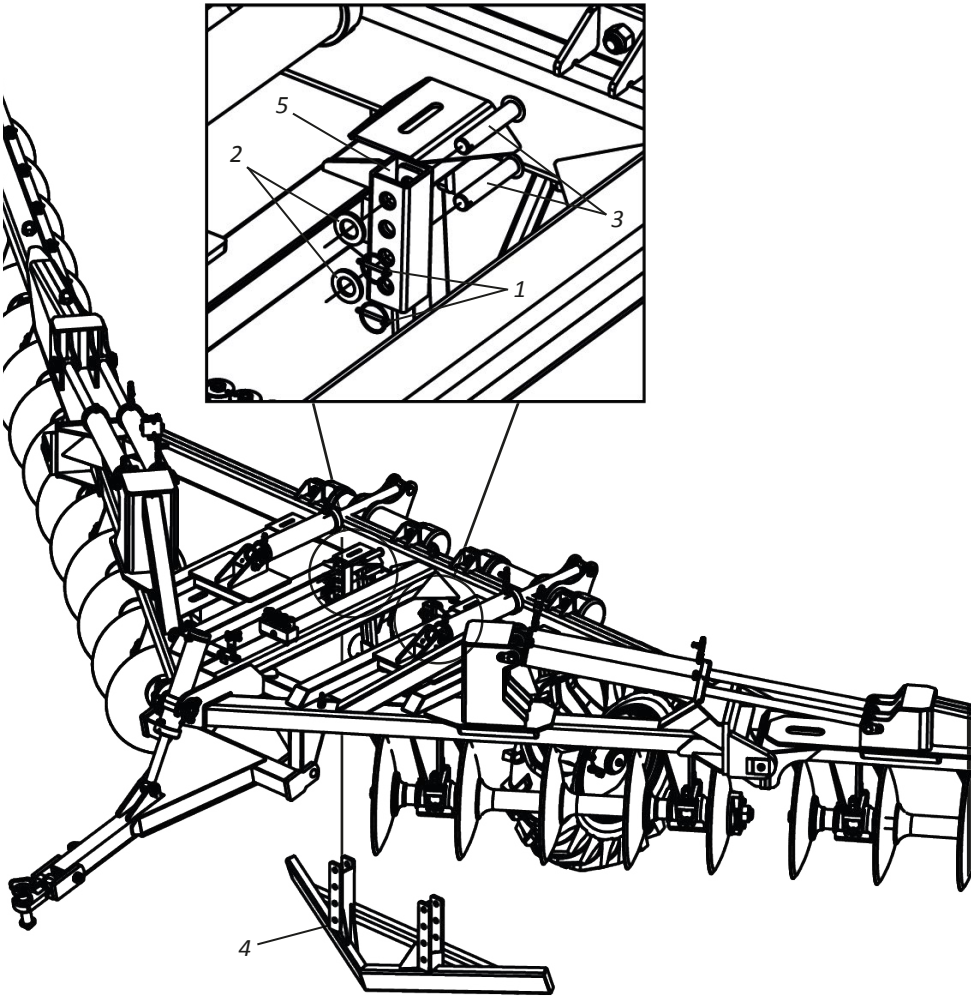

▪ Operations

• Operating recommendations - Part I

Preparing the **TACR-A** and the tractor will save you time and provide better results in field work. The following suggestions may be useful for you.

TERRACING PLOUGH STRUCTURE

After the first day of work with the **TACR-A,** retighten all bolts, nuts, and check the conditions of pins and locks in the terracing plough structure. Then perform a general tightening on all bolts and nuts of the terracing plough structure every 24 hours.

DISCS SECTIONS

Special attention should be given to the discs sections of the **TACR-A.** Retighten all screws and nuts of the discs sections everyday during the first week of use. The retighten all screws and nuts of the discs sections periodically.

GENERAL RECOMMENDATION

01 - Adjust the tractor according to the content of the instruction manual, always using front and rear weights to stabilize the equipament.
02 - Always connect to the tractor in low gear and very carefully.
03 - Before working with the **TACR-A** it is important to check its coupling system, perform a full overhaul, retighten nuts and bolts, and check the locking of pins and cotter pins.
04 - After hitching, the next adjustments will be made directly in the field of work, analyzing the terrain for texture, humidity, and types of operations to be performed with the **TACR-A**.
05 - On the tractor, choose a gear that allows to save some power, guaranteeing against unforeseen efforts.
06 - Observe the working and transport speeds specified on page 10. We do not recommend exceeding speeds to maintain service efficiency and avoid damage to the **TACR-A**.
07 - Do not disconnect any hose without first relieving the circuit pressure by turning the control levers a couple of times with the engine off.
08 - Remove pieces of wood or any other object that may be attached to the discs.
09 - In compacted terrains where disc penetration is difficult, depth can be minimal, making work unsatisfactory. In these cases, the application of other more suitable products is recommended.

▪ Operations

• Operating recommendations - Part II

10 - During work or transport the tractor's drawbar must remain fixed.
11 - When servicing the **TACR-A**, lower it to the ground and switch the engine off.
12 - The **TACR-A** has several adjustments, but only local conditions can determine the best adjustment.

When is doubt, never operate or handle the TACR-A, contact After Sales.
Telephone: 0800-152577 / E-mail: posvenda@baldan.com.br

▪ Operations

• Terrace construction

The **TACR-A** is applicable to the construction of terraces of 6.00 m x 1.30 m or 12.00 m rated cross section width.

The soil must not be so humid that it does not allow plowing or harrowing operations where the **TACR-A** is used.

Soils with ideal humidity favors the flow of earth, helping in the formation of the terrace.

Ideal humidity is characterized by the formation of a clod that presents cracks without crumbling after being released. In these conditions, the best performance is achieved with the implement, as the soil will not adhere to the discs, it will flow to the center of the terrace more easily requiring less tensile stress.

Terraces made from compacted soils are also posible provided additional measures are put in place, such as:

- A 40 and 50 cm depp, 10 m wide subsoiling operation should be performed in the strip to be terraced.

- Harrow the subsoiled strip to promote its crumbling.

Such measures ensure the best performance of your **TACR-A**, and preserve it from abnormal stress during work.

Once the terrace has been finished, it is desirable to perform subsoiling on its upper edge for better water absorption, regardless of the type of soil.

If your terrain has a vegetable cover that is too dense, it is advisable to harrow the strips to be terraced, to avoid clogging the **TACR-A'**s discs.

For terrains that has already been prepared, you can start terracing operating with a slight slope in the disc sections, i.e. with a slightly activated head hydraulic cylinder. For the other passes, slowly activate the hydraulic cylinder until the complete formation of the terrace.

NOTE | **If necessary, use tires to assist in operation.**

▪ Operations

• Terrain slope

Slopes in certain crops of the year range from zero to 10% in most cases. Through these slopes land can be efficiently protected against water erosion if terraced.

This efficency increases, if, rather than simple narrow terraces, by building wide base terraces and with lateral terrain slopes completely used by the crops.

Distances between terraces vary terraces vary according to the type of soil (clay or sand) and slope.

• Number of passes

During work, the number of passes varies according to terrain topography, tractor soil type, and desired height terrace.

• Terrace finishing

Terrace finishing is the elimination of the grooves left by the last discs, which must be done with subsoilers or disc plows where those further increase the base width.

The advantage of using subsoilers in terrace finishing is the infiltration of a position of the water before it reaches the terraces, reducing the risk of rupture.

Motor graders, wheel loaders, and crawler tractors are applied for final finishing of terraces.

▪ Operations

• Bench terrace construction

The **TACR-A** is also applicable to the construction of bench terraces. The bench terrace is characterized by being built so that the channel is triangular in shape, with a practically vertical slope to separate it from the ridge. This type of terrace has good stability and small unused plainting area.

In the image below, see the schematic of a cross section of a bench terrace (distance A represents the unusable small crop strip).

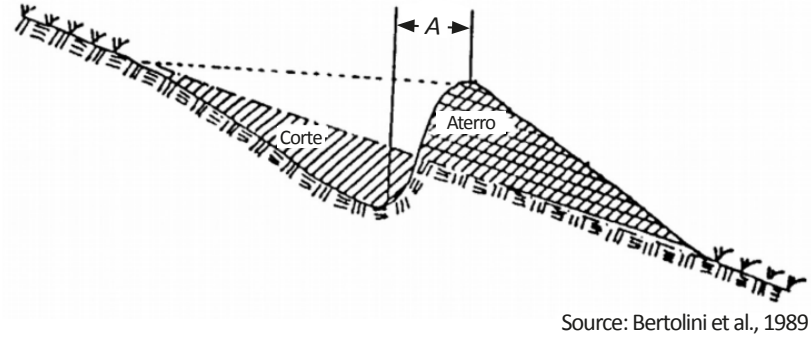

Source: Bertolini et al., 1989

To construct a bench terrace, partially articulate one side of the **TACR-A**.

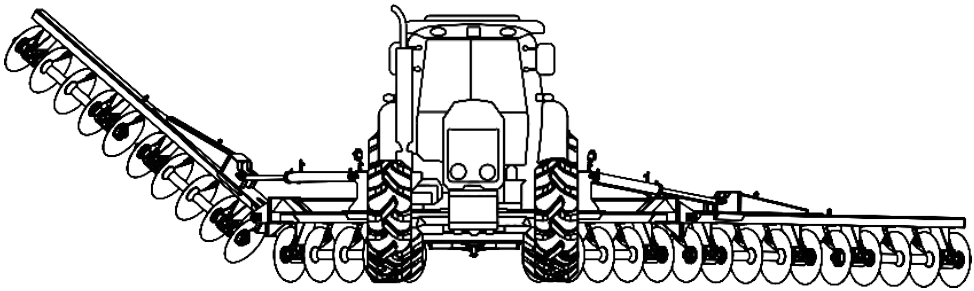

BENCH TERRACE CONSTRUCTION

▪ Maintenance

The **TACR-A** has been developed to provide you with the maximum yield on land conditions. Experience has shown that periodic maintenance of certain parts of **TACR-A** is the best way to help you avoid problems, so we suggest checks.

• Tire pressure

The tires should always be properly calibrated avoiding early wear due to excess or lack of pressure.

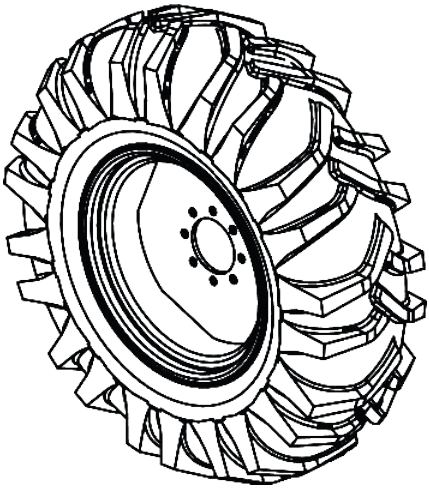

TIRES 14.9.24 12 PLYS / RIM W 12" X 24"
USE: 48 LBS/POL²

⚠ ATTENTION

Never weld the wheel mounted with tire, the heat may cause air pressure increase and provoke the explosion of the tire.
When filling the tire, position yourself besides the tire, never in front of it.
To fill the tire, always use containment device (armor cage).
Assemble the tires with proper equipment. The service should only be performed by people qualified to do the work.

IMPORTANT

When calibrating tires, do not exceed the recommended calibration.

NOTE

The pressure of the tractor tires should be performed according to the manufaturer's recommendation.

▪ Maintenance

ATTENTION **Check nuts and bolts, retighten them if necessary. The maintenance of general re-installation of the equipment must be performed every 8 hours of work.**

• Lubrification

Lubrification is essential for the good performance and durability of the **TACR-A**'s moving parts, saving maintenance costs.

Before starting the operation, carefully lubrificate all grease cups, always observing the lubrification intervals in the followings pages. Make sure of the lubrificant quality regarding its efficiency and purity, avoiding products contaminated by water, dust and other agents.

• Table of greases and equivalents

Manufacturer	Types of grease recommended
Petrobrás	Lubrax GMA-2
Atlantic	Litholine MP 2
Ipiranga	Ipiflex 2
Castrol	LM 2
Mobil	Grease MP
Texaco	Marfak 2
Shell	Alvania EP 2
Esso	Multi H
Bardahl	Maxlub APG-2EP
Valvoline	Palladium MP-2
Petronas	Tutela Jota MP 2 EP
	Tutela Alfa 2K
	Tutela KP 2K

ATTENTION **If there are equivalent manufacturers and/or brands tha are not listed in the table, consult the manufacturer's technical manual.**

▪ Maintenance

• Lubricate every 24 hours of work - Part I

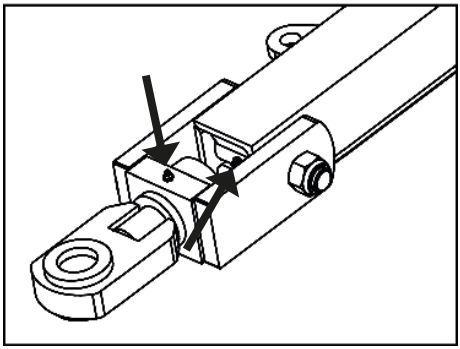

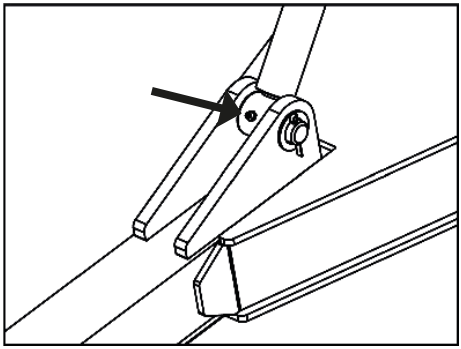

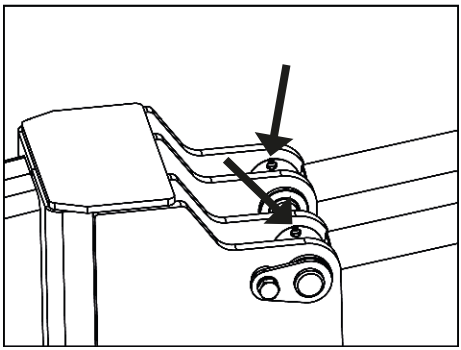

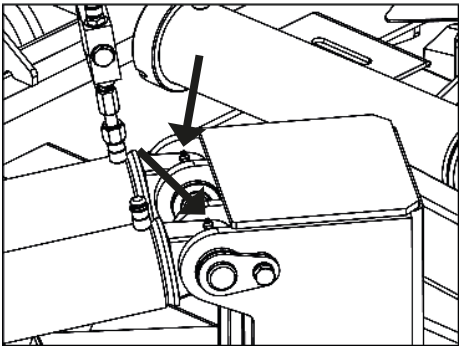

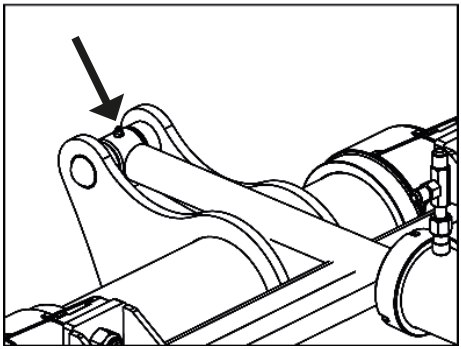

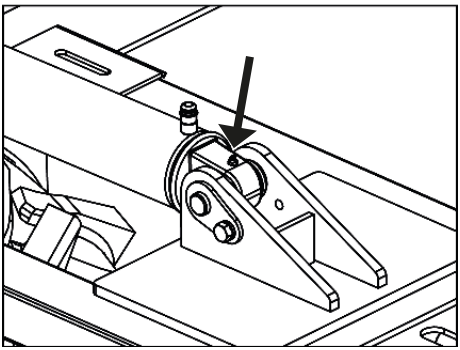

ATTENTION When lubricating the TACR-A, do not exceed the amount of new grease. Put an adequate amount.

▪ Maintenance

- **Lubricate every 24 hours of work - Part II**

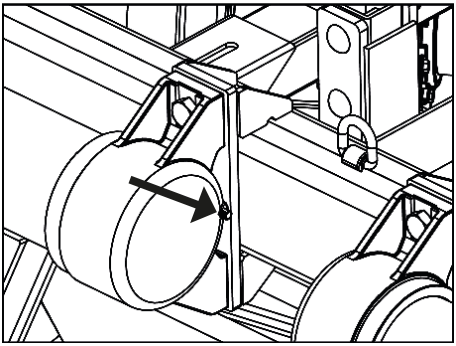

- **Lubricate every 60 hours of work**

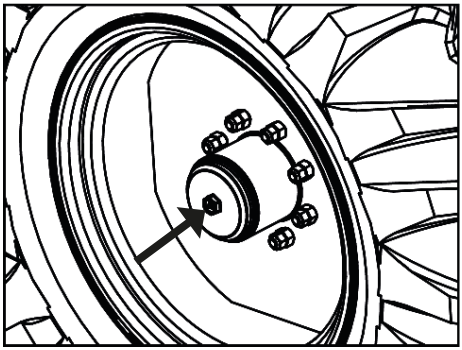

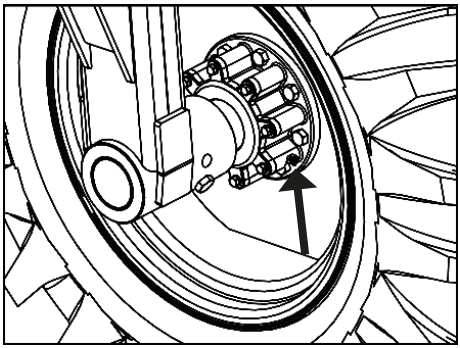

⚠ ATTENTION | **When lubricating the TACR-A, do not exceed the amount of new grease. Put an adequate amount.**

▪ Maintenance

• Lubricate of grease bearings

Grease-bearings must be lubrificated every 12 hours of work. Use **EP** grease **(DIN51825 KP00K Consistency NLGI 2/3 Specification).**

The amount of grease in each bearing is **0,500 kg**.

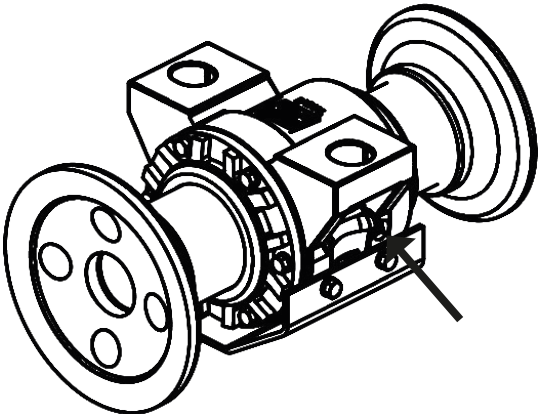

⚠ ATTENTION

Before lubrificating the bearing, wipe the grease with a clean, lint-free cloth. Replace damaged grease fittings.

• Lubrification of oil bearings

On the first days of work with the **TACR-A**, check the bearing oil level daily, then check every 120 hours of work.

Oil change should be done every 1200 hours of work. Use transmission **90 API GL4, MIL-L-2105; SAEJ306, may/81: SAE 80W,90 and 140.**

The amount of oil in each bearings is **0,320 liters**.

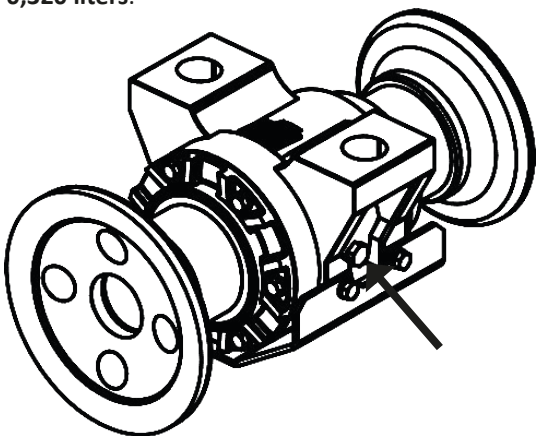

⚠ ATTENTION

The ideal oil level is when it reaches the plug hole. To check the bearing oil level, search for a plain place.

▪ Maintenance

• Operational Maintenance

PROBLEMS	PROBABLE CAUSES	SOLUTIONS
The tires are damaged.	Work area with rocks, stubs or remaining of culture with stems that spike the tire.	Eliminate elements that cause damage to the tires before using the TACR-A.
	Tires are not with proper pressure, generating deformations.	Maintain proper tires pressure.
Weird noise on the wheels.	Loosen or play in wheel hub.	Retighten the wheel nuts and adjust wheel hub bearings.
	Breaking of bearings.	Identify the occurence and replace damaged parts.
Quick coupling does not fit.	Couplings of different types.	Change them for males and females of the same type.
Leakage in hydraulic hose.	Lack of sealing material on the thread.	Use sealing tape and retighten carefully.
	Insufficient tightening.	Retighten carefully.
	Damaged repairs.	Replace hubs.
Leakage in quick couplings.	Insufficient tightening.	Retighten carefully without excess.
	Damaged repairs.	Replace hubs.
Quick coupling does not connect.	Couplings of different brands.	Use quick coupling of the same brand.
	Mixing of needle-type coupling with sphere-type coupling.	Always use quick coupling of the same type.
	Pressure on the system.	Relief the pressure to connect.

▪ Maintenance

• Cares

01 - Before each work, check the condition of all hoses, pins, screws, bearings, discs, and sections. Where necessary, retighten or replace them.
02 - Travel speed should be carefully controlled according to terrain conditions.
03 - The **TACR-A** is used in several applications, requiring knowledge and attention when handling it.
04 - Only local conditions can determine the best way to operate the **TACR-A**.
05 - When assembling or disassembling parts of the **TACR-A**, use appropriate methods and tools.
06 - Carefully observe the lubrification intervals at the multiple lubrification points of the **TACR-A**. Respect lubrification intervals.
07 - Always check if the parts have wears. If there is a need for replacement, **always demand Baldan original parts**.
08 - Keep the **TACR-A** discs always sharp.

! IMPORTANT | **Proper and periodic maintenance are necessary to ensure a long useful life of the TACR-A.**

▪ Maintenance

• General Cleaning

01 - When storing the **TACR-A**, perform a general cleaning and wash it thoroughly water only. Make sure the paint is not worn, if so, apply a general coat and protective oil and fully lubrificate the **TACR-A**. Do not use burnt oil or other abrasive materials.

02 - Fully lubrificate the **TACR-A**. Check all moving parts of the **TACR-A** for wear and gaps and make the required adjusments or part replacements, leaving the terracing plough ready for the next work.

03 - After all maintenance work, store the terracing plough in a covered and dry place, with proper support.

Avoid: - That the discs come into direct contact with the ground.
- Hydraulic hoses should be properly capped.

04 - When connecting or disconnecting hydraulic hoses, do not let the terminals touch the ground. Before connecting hydraulic hoses, wipe the connections with a clean, lint-free cloth. **Do not use tow!**

05 - Replace all adhesives, especially those about warnings, that are damaged or missing. Make everyone aware of the importance and risks of accidents when instructions are not followed.

06 - After all maintenance precautions, store your **TACR-A** on a plain surface, at a covered and dry location, away from animals and children.

07 - We recommend washing the **TACR-A** with only water before work.

⚠ ATTENTION | **Do not use chemicals to wash the TACR-A as this may damage the paint.**

• Conservation of the terracing plough - Part I

To extend the useful life and appearance of the **TACR-A**, follow the instructions below:

01 - Wash and clean all **TACR-A** components during and at the end of the work season.

02 - Use neutral products to clean the **TACR-A**, following the safety and handling guidelines provided by the manufacturer.

03 - Always perform maintenance in the periods indicated in this manual.

• Conservation of the terracing plough - Part II

The practices and care below make a difference for the conservation of the **TACR-A** if adopted by the owner or operator.

▪ Maintenance

01 - Be careful when performing high-pressure washing;
02 - Only use NEUTRAL detergent and water (pH equal to 7);
03 - Apply the product, following the manufacturer's instructions strictly, on the wet surface and in the correct sequence, respecting the time of application and washing;
04 - Stains and dirt not removed with the products should be removed with the aid of a sponge.
05 - Rinse the machine with clean water to remove all chemical residues.
06 - Do not use: - Detergents with a basic active ingredient (pH higher than 7) may damage/ stain the the terracing plough paint.
- Detergents with acid active ingredient (pH less than 7), act as stripper/remover of zinc coating (the protection of parts against oxidation).

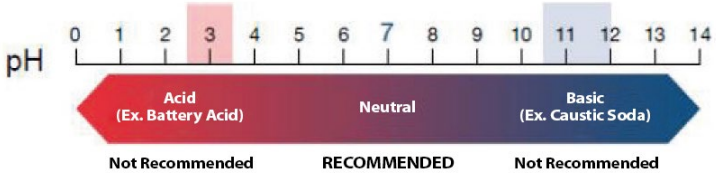

07 - Let the machine dry in the shade so that it does not accumulate water in its components. Very fast drying can cause stains on your paint.
08 - After drying, lubrificate all chains and greases according to the recommendations in the operator's manual.
09 - Spray the whole machine, especially its zinc parts, with protective oil, following the manufaturer's application guidelines. The protective also prevents dirt from adhering to the machine, facilitating subsequent washings.
10 - Observe curing (absorption) time and application intervals as recommended by the manufacturer.

ATTENTION | **Do not use any other type of oil to protect the scarifier (used hydraulic oil, diesel oil, castor oil, kerosene, etc.).**

IMPORTANT | **We recommend the following protective oils:**
- Bardahl: Agro protective 200 or 300
- ITWChemical: Zoxol DW - Series 4000

NOTE | **Ignoring the conservation measures mentioned above may result in loss or warranty for painted or zinc-coated components which may suffer oxidation (rust).**

▪ Lifting

• Lifting points

The **TACR-A** has 7 "A" lifting points located in its central frame and side frames identified with the sticker (1) attached to these points. When assembling, loading, unloading, or servicing the **TACR-A,** it must be lifted in separate modules, requiring the coupling of the chains to the "A" lifting points.

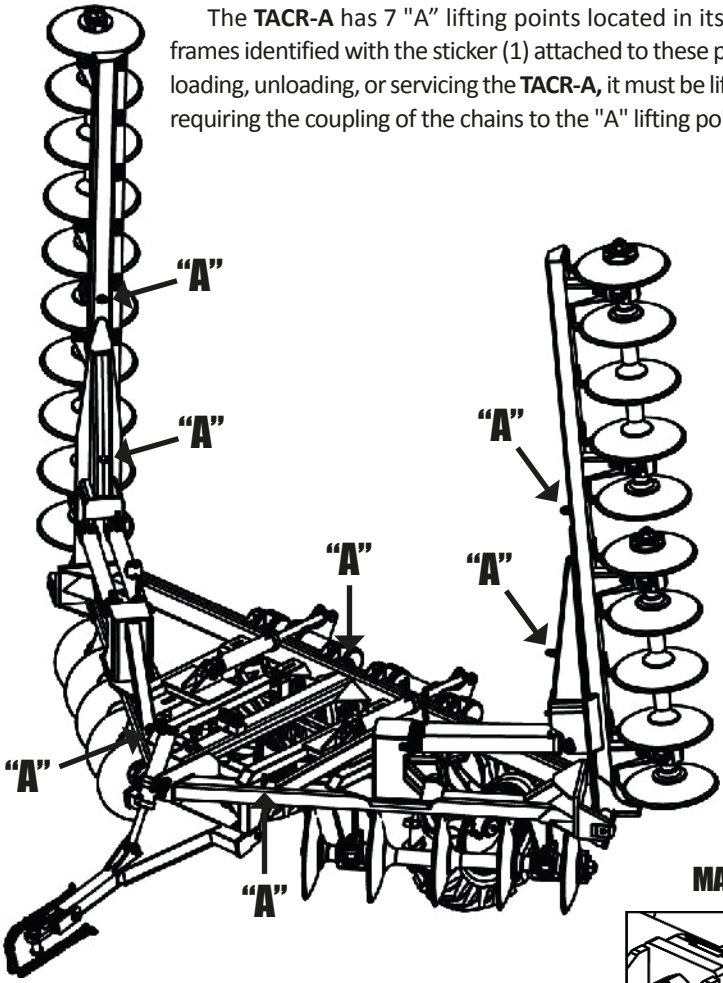

MAXIMUM LOAD: 1000 KG

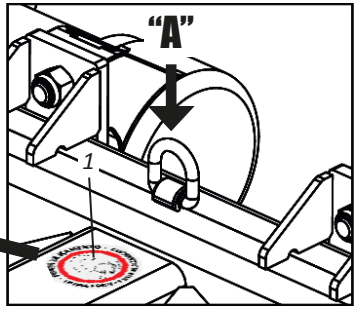

▪ Optional

• Optional Accessories

The **TACR-A** can be optionally purchased with:

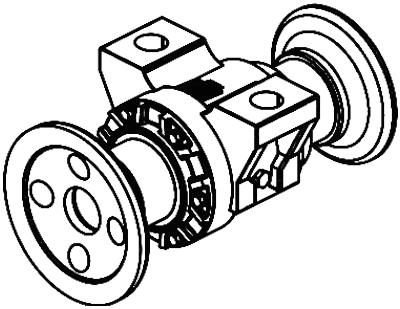

AXIAL BEARING WITHOUT GUARD

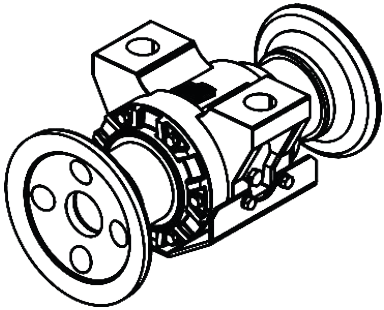

AXIAL BEARING WITH GUARD

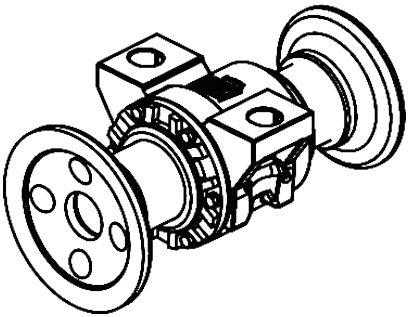

GREASE BEARING WITHOUT GUARD

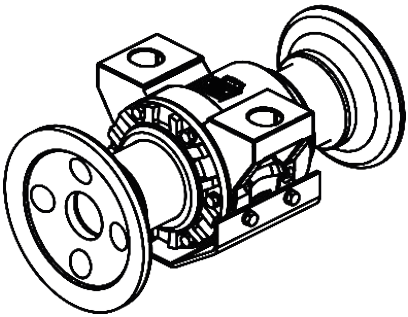

GREASE BEARING WITH GUARD

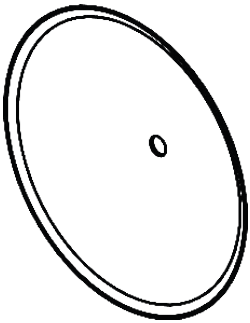

FLAT DISC

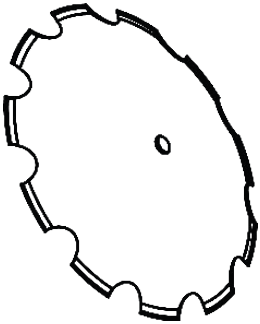

TRIMMED DISC

Identification

• Identification plate

In order to consult the parts catalog or ask Baldan for service, always indicate the model (1), serial number (2) and manufacturing date (3), which is on the nameplate of your **TACR-A**.

ATTENTION

The drawings in this Instruction Manual are merely illustrative.

CONTACT

In case of doubts, never operate or handle your equipment without contacting Post-Sales.
Telephone: 0800-152577
e-mail: posvenda@baldan.com.br

PUBLICATIONS

Code: 60550108634 | CPT: TACRA01219

PEÇAS ORIGINAIS BALDAN
ORIGINAL PARTS • PIEZAS ORIGINALES

▪ Identification

• Product identification

Please make the correct identification of the data below, to always have information about the service life of your equipment.

Owner: _____

Dealer: _____

Property: _____

City: _____

State: _____

Certificate of Warranty no.: _____

Implement: _____

Serial No: _____

Purchase Date: _____

Invoice: _____

▪ Notes

Certificate of Warranty

BALDAN IMPLEMENTOS AGRÍCOLAS S/A ensures the dealer normal performance of the implement for a period of six (6) months as of the delivery date on the retail invoice to the first final consumer. During this period, **BALDAN** undertakes to repair defects in material and/or of manufacture of its liability, including labor, freight and other expenses of the dealer's liability.

In the warranty period, request and replacement of eventual defective parts shall be made to the dealer of the area, who will submit the faulty piece for **BALDAN** analysis. When this procedure is not possible and the resolving capacity of the dealer is exhausted, the dealer will request the support of **BALDAN Technical Assistance** through a specific form distributed to dealers. After analyzing the replaced items by Baldan Technical Assistance, and concluding that it is not a warranty, then the dealer will be responsible for the costs related to the replacement; as well as material expenses, travel including accommodation and meals, accessories, lubricant used and other expenses arising from the call out to Technical Assistance, and Baldan company is authorized to carry the respective invoice in the name of the resale. Any repair carried in the product within the dealer warranty deadline will only be authorized by **BALDAN** upon previous budget presentation describing parts and work to be performed.

The product is excluded from this term if it is repaired or modified by representatives not belonging to the **BALDAN** dealer network, as well as the application of non-genuine parts or components to the user's product. This warranty is void where it is found that the defect or damage is caused by improper use of the product, failure to follow instructions or inexperience of the operator.

It is agreed that this warranty does not cover tires, polyethylene tanks, cardan, hydraulic components, etc., which are equipment guaranteed by their manufacturers. Manufacturing and/or material defects, object of this warranty term, will not constitute, under any circumstances, grounds for termination of a purchase agreement, or for indemnification of any nature.

BALDAN reserves the right to change and/or perfect the technical characteristics of its products, without previous notice, and without obligation to proceed in the same way with the products previously manufactured.

▪ Inspection and Delivery Certificate

SERVICE BEFORE DELIVERY: This implement was carefully prepared by the sale organization, with all its parts inspected according to the manufacturing prescriptions.

DELIVERY SERVICE: The user was informed about the current warranty terms and instructed on the usage maintenance precautions.

I confirm that the user has been informed about the current warranty terms and instructed on the usage maintenance precautions.

Implement: _____ Serial Number: _____

Date: _____ Tax Number: _____

Dealer: _____

Telephone: _____ CEP: _____

City: _____ State: _____

Owner: _____

Telephone: _____

Address: _____ Number: _____

City: _____ State: _____

E-mail: _____

Sale date: _____

Signature / Dealer Stamp _____

1st copy - Owner

▪ Inspection and Delivery Certificate

SERVICE BEFORE DELIVERY: This implement was carefully prepared by the sale organization, with all its parts inspected according to the manufacturing prescriptions.

DELIVERY SERVICE: The user was informed about the current warranty terms and instructed on the usage maintenance precautions.

I confirm that the user has been informed about the current warranty terms and instructed on the usage maintenance precautions.

Implement: _____ Serial Number: _____

Date: _____ Tax Number: _____

Dealer: _____

Telephone: _____ CEP: _____

City: _____ State: _____

Owner: _____

Telephone: _____

Address: _____ Number: _____

City: _____ State: _____

E-mail: _____

Sale date: _____

Signature / Dealer Stamp _____

2nd copy - Dealer

▪ Inspection and Delivery Certificate

SERVICE BEFORE DELIVERY: This implement was carefully prepared by the sale organization, with all its parts inspected according to the manufacturing prescriptions.

DELIVERY SERVICE: The user was informed about the current warranty terms and instructed on the usage maintenance precautions.

I confirm that the user has been informed about the current warranty terms and instructed on the usage maintenance precautions.

Implement: _____ Serial Number: _____

Date: _____ Tax Number: _____

Dealer: _____

Telephone: _____ CEP: _____

City: _____ State: _____

Owner: _____

Telephone: _____

Address: _____ Number: _____

City: _____ State: _____

E-mail: _____

Sale date: _____

Signature / Dealer Stamp _____

3rd copy - Manufacturer (Please send completed within 15 days).

1.74.05.0059-5

AC MATÃO
ECT/DR/SP

RESPONSE CARD

NO STAMPING IS REQUIRED

THE STAMP WILL BE PAID BY:

BALDAN IMPLEMENTOS AGRÍCOLAS S/A.
Av. Baldan, 1500 | Nova Matão | CEP: 15993-900 | Matão-SP. | Brasil
Tel: (16) 3221-6500 | Fax: (16) 3382-6500
www.baldan.com.br | email: sac@baldan.com.br
Export: Tel: +55 (16) 3221-6500 | Fax: +55 (16) 3382-4212 | 3382-2480
email: export@baldan.com.br

BALDAN

Avenida Baldan, 1500
Nova Matão
15.993-900
Matão/SP - Brasil
sac@baldan.com.br
export@baldan.com.br

+55 16 3221 6500
baldan.com.br