Instruction Manual

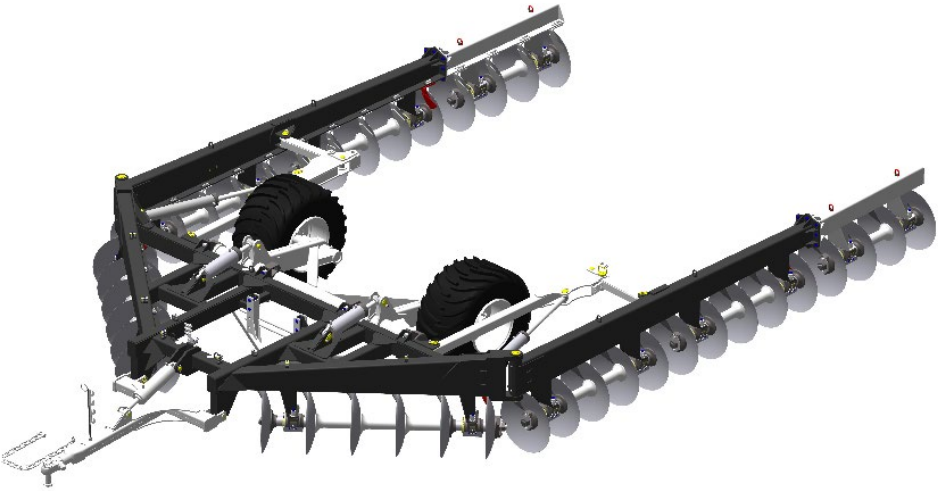

TACR

Remote Control Terracing Plough

BALDAN

▪ Presentation

We appreciate the preference and would like to congratulate you for the excellent choice you just made, since you have acquired a product manufactured with **BALDAN IMPLEMENTOS AGRÍCOLAS S/A** technology.

This manual will guide you through the procedures required since its acquisition until operational procedures of usage, safety and maintenance.

BALDAN assures that it has delivered this implement for resale in full and in perfect conditions.

Resale was responsible for the custody and maintenance during the period in its possession, and also for the assembly, retightening, lubrication and overhaul.

During the technical delivery, dealer should guide the user regarding maintenance, safety, their obligations in eventual technical assistance, strict compliance with the warranty term and reading the instructions manual.

Any technical assistance request while in warranty should be made to the dealer from whom you have purchased it.

We reiterate the need for a careful read of the warranty certificate and compliance of all items from this manual, because by doing so you will increase the life of your device.

Instruction Manual

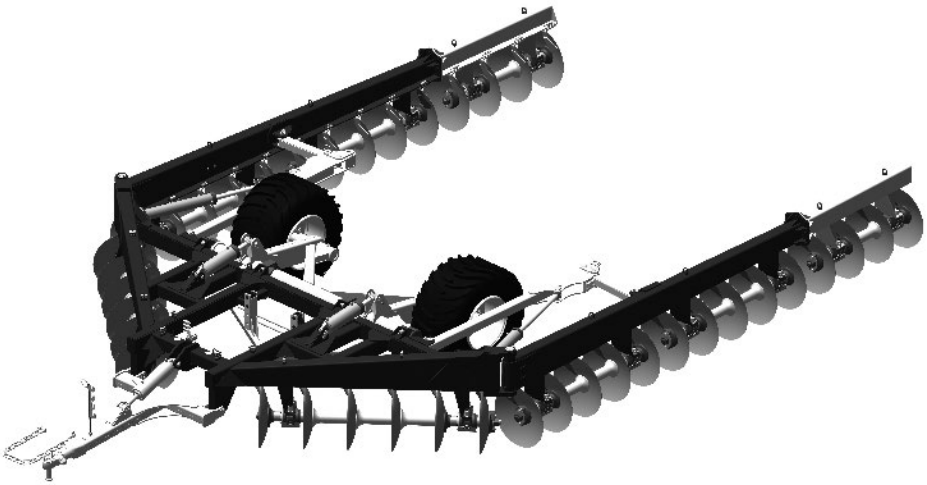

TACR

Remote Control Terracing Plough

BALDAN IMPLEMENTOS AGRÍCOLAS S/A.
CNPJ: 52.311.347/0009-06
Insc. Est.: 441.016.953.110

Scan the QR Code on the identification plate of your device and access this Instruction Manual online.

BALDAN

Index

BALDAN WARRANTY **07**

GENERAL INFORMATION **08**

To the owner *08*

SAFETY RULES **9**

To the operator ..... *9 - 13*

WARNINGS ..... **14 - 15**

COMPONENTS **16**

TACR - Remote Control Terracing Plough (Hydraulic Opening) *16*

TACR - Remote Control Terracing Plough (Manual Opening) *17*

DIMENSIONS **18**

TACR - Remote Control Terracing Plough ..... *18 - 19*

SPECIFICATIONS **20**

TACR - Remote Control Terracing Plough (Hydraulic Opening) *20*

TACR - Remote Control Terracing Plough (Manual Opening) *21*

ASSEMBLY **22**

Wrench set *22*

Assembling discs section *23*

Assembly of the disc sections - TACR 24 discs *24*

Assembly of the disc sections - TACR 30 discs *25*

Assembly of the disc sections - TACR 34 discs *26*

Assembly of the disc sections - TACR 40 discs *27*

Assembly of the disc section on the center frame *28*

Assembly of the left side frame to the center frame *29*

Assembly of the disc section on the left side frame *30*

Assembly of the "extension" left side frame on the left side frame *31*

Assembly of the disc section on the "extension" left side frame *32*

Front and rear wiper assembly *33*

Assembly of the right side articulation support (Hydraulic Opening) *34*

Assembly of the right side articulation support (Manual Opening) *35*

Assembly of the leveling support *36*

Assembly of the wheel and hydraulic cylinder support ..... *37 - 38*

Assembly of the tires *39*

Assembly of the coupling head *40*

Assembly of the hydraulic system - TACR 24/30/34/40 discs (Hydraulic Opening) *41*

Assembly of the hydraulic system - TACR 24/30/34 discs (Manual Opening) *42*

HITCH **43**

Tractor hitch *43*

LEVELLING **44**

Levelling of the terracing plough *44*

ADJUSTMENT **45**
Transport procedure (Hydraulic Opening) ..... *45 - 46*
Transport procedure (Manual Opening) ..... *47 - 48*
Working procedure (Hydraulic Opening) ..... *49 - 50*
Working procedure (Manual Opening) ..... *51 - 52*
Adjustment of the leveling support *53*
OPERATIONS **54**
Operating recomendations ..... *54 - 55*
Terracing construction *55*
Terrain slope *56*
Number of passes *56*
Terrace finishing *56*
TACR operations ..... *57 - 58*
MAINTENANCE **59**
Tire pressure *59*
Lubrification *60*
Lubrificate every 24 hours of work ..... *61 - 62*
Lubrification of grease bearings *63*
Lubrification of oil bearings *63*
Operational maintenance *64*
Care *65*
General cleaning *66*
Conservation of the terracing plough ..... *66 - 67*
LIFTING **68**
Lifting points *68*
OPTIONAL **69**
Optional accessories *69*
IDENTIFICATION **70**
Identification plate *70*
Product identification *71*
NOTES ..... **72 - 73**
CERTIFICATE **74**
Certificate of warranty ..... *74 - 80*

▪ Baldan Warranty

BALDAN IMPLEMENTOS AGRÍCOLAS S/A ensures the dealer normal performance of the implement for a period of six (6) months as of the delivery date on the retail invoice to the first final consumer.

During this period, **BALDAN** undertakes to repair defects in material and/or of manufacture of its liability, including labor, freight and other expenses of the dealer's liability.

In the warranty period, request and replacement of eventual defective parts shall be made to the dealer of the area, who will submit the faulty piece to **BALDAN** analysis.

When this procedure is not possible and the resolving capacity of the dealer is exhausted, the dealer will request the support of **BALDAN** Technical Assistance through a specific form distributed to dealers.

After analyzing the replaced items by **BALDAN** Technical Assistance, and concluding that it is not a warranty, then the dealer will be responsible for the costs related to the replacement; as well as material expenses, travel including accommodation and meals, accessories, lubricant used and other expenses arising from the call out to Technical Assistance, and **BALDAN** company is authorized to carry the respective invoice in the name of the resale.

Any repairment carried in the product within the dealer warranty deadline will only be authorized by **BALDAN** upon previous budget presentation describing parts and workforce to be executed.

The product is excluded from this term if it is repaired or modified by representatives not belonging to the **BALDAN** dealer network, as well as the application of non-genuine parts or components to the user's product.

This warranty is void where it is found that the defect or damage is caused by improper use of the product, failure to follow instructions or inexperience of the operator.

It is agreed that this warranty does not cover tires, polyethylene tanks, cardan, hydraulic components, etc., which are equipment guaranteed by their manufacturers.

Manufacturing and/or material defects, object of this warranty term, will not constitute, under any circumstances, grounds for termination of a purchase agreement, or for indemnification of any nature.

BALDAN reserves the right to change and/or perfect the technical characteristics of its products, without previous notice, and without obligation to proceed in the same way with the products previously manufactured.

General Information

• To the owner

BALDAN IMPLEMENTOS AGRÍCOLAS S/A is not responsible for any damaged caused by accident due to usage, transportation, or in the improper or incorrect transportation of its implement, whether by negligence and/or inexperience of any person.

Only people with complete knowledge of the tractor and the implement should carry their transportation and operation.

BALDAN is not responsible for any damaged caused in unpredictable or unrelated situations to the normal use of the implement.

The incorrect handling of this equipment may result in severe or fatal accidents. Before running the equipment, carefully read the instructions contained in this manual. Make sure that the person responsible for the operation is instructed as the correct and safe handling. Also make sure that the operator has read and understood the instructions manual of the product.

ATTENTION

NR-31 - SAFETY AND HEALTH AT WORK IN AGRICULTURE, LIVESTOCK FARMING, FORESTRY, FOREST EXPLORATION AND AQUACULTURE.

This Regulatory Standard has the purpose of establishing precepts to be observed in the organization and work environment, compatible to the planning and development of agriculture, livestock, forestry, forest exploitation and aquaculture with safety and health and work environment.

MR. OWNER OR OPERATOR OF THE EQUIPMENT.
Read and carefully comply with provisions of NR-31.

For more information, refer to the site and read NR-31 in full.
http://portal.mte.gov.br/legislacao/normas-regulamentadoras-1.htm

▪ Safety rules

• To the operator

THIS SYMBOL INDICATES IMPORTANTE SAFETY WARNING. IN THIS MANUAL, WHENEVER YOU FIND IT, READ THE FOLLOWING MESSAGE CAREFULLY AND PAY ATTENTION TO THE POSSIBILITY OF PERSONAL ACCIDENTS.

ATTENTION

Carefully read the instructions manual tolearn about the recommended safety practices.

ATTENTION

Only start to operate the tractor when you are properly seated and with the seat belt locked.

ATTENTION

Do not transport people on the tractor or over the equipment.

ATTENTION

There are risks of severe injuries due to tipping when working in sloped terrains. Do not over speed.

ATTENTION

Do not work with the tractor if the front has insufficient ballast to the rear equipment. Should there be a trend to lift, add weights or ballasts to the front or the front wheels.

ATTENTION

Before performing any maintenance in your equipment, make sure it is properly stopped. Avoid being run over.

▪ Safety rules

ATTENTION

FOLLOW ALL RECOMMENDATIONS, WARNINGS AND SAFE PRACTICES RECOMMENDED IN THIS MANUAL, UNDERSTAND THE IMPORTANCE OF YOUR SAFETY. ACCIDENTS MAY LEAD TO DISABILITY OR INCLUDING DEATH. REMENBER, ACCIDENTS CAN BE AVOIDED!

ATTENTION

Do not perform adjustments while TACR running. When performing any service on TACR, switch off the tractor first. Use appropriate tools.

ATTENTION

When searching for a possible leakage on the hoses, use a piece of cardboard or wood, never use your hands. Avoid fluid incision into the skin.

ATTENTION

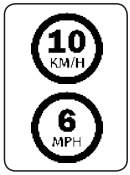

When transportating the TACR, do not exceed 10 Km/h or 6 MPH, avoiding damage and accident risks.

ATTENTION

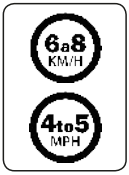

When working with TACR, do not exceed 6 to 8 Km/h or 4 to 5 MPH, to avoid damage and accident risks.

ATTENTION

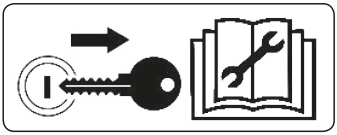

Remove the ignition key before performing any type of maintenance in TACR.
Protect yourself against possible injuries or death caused by TACR unexpected start-up.
Do not start up the tractor if TACR is not properly coupled.

ATTENTION

Hydraulic oil works under pressure and may cause serious injuries if there are any leakages.
Periodically check hoses for conservation. If there are any sign of leakage, replace them immediately.
Before connecting or disconnecting hydraulic hoses, relief system pressure by activating the command with the tractor power switched off.

Safety rules

ATTENTION

Always maintain places of access and work free of residues such as oil or grease to prevent accidents.

ATTENTION

Before working on or transporting the TACR, check for people or obstructions near the machine.

ATTENTION

Avoid heating parts near the fluid lines.
Heating may generate fragility in the material, rupture and exit of the pressurized fluid, causing burns and injuries.

ATTENTION

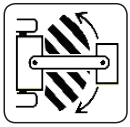

Keep the articulation area free while the TACR is in operation.
In closed curves, prevent tractor wheels from touching the head.

ATTENTION

Never weld the wheel mounted with tire, the heat may cause air pressure increase and provoke the explosion of the tire.
When filling the tire, position yourself besides the tire, never in front of it. To inflate a tire, always use a containment device (inflation cage).

ATTENTION

Always stay away from the active elements of the TACR (discs), as they are sharp and may cause accidents.
When performing any service in the discs, use safety gloves on the hands.

ATTENTION

Dispose residues inappropriately affects the environment and the ecology since you will be polluting rivers, canals or the soil.
Inform yourself about the proper way of recycling or disposing residues.

PROTECT THE ENVIRONMENT!

▪ Safety rules

⚠ ATTENTION

When operating the TACR to open or close it, do not allow personnel to be near or inside the area of action of the side frames. Ignoring this warning could cause serious injury or death.

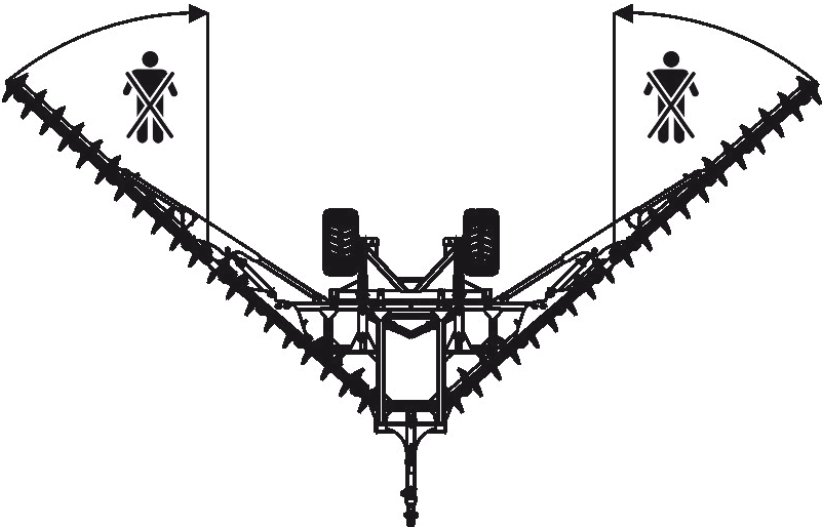

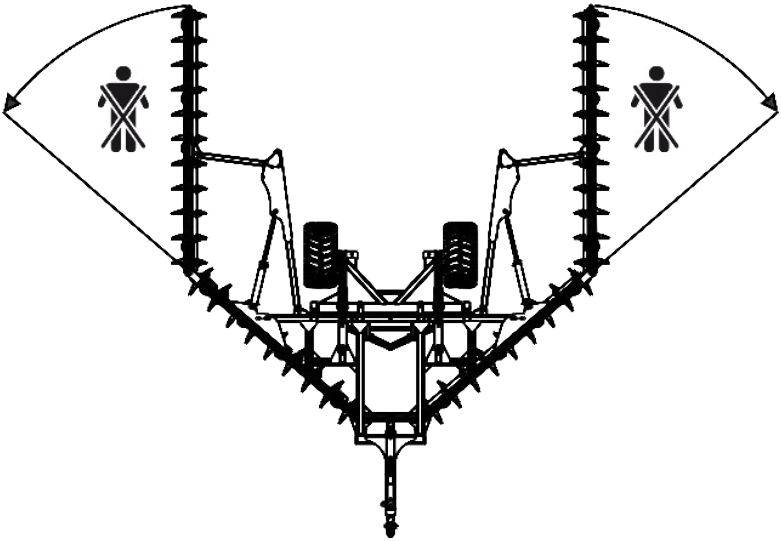

▪ Safety rules

- **PPE Equipament**

ATTENTION | **DO NOT WORK WITH TACR WITHOUT FIRST WEARING PPES (SAFETY EQUIPMENT). IGNORING THIS WARNING MAY CAUSE DAMAGES TO HEALTH, SEVERE ACCIDENTS OR DEATH.**

When performing certain procedures with the **TACR**, place the following Safety Equipment (PPE) below:

IMPORTANT

The safety practice must be performed in all stages of working with the TACR, thus avoiding accidents such as impact of objects, fall, noise, cuts and ergonomics, ie the person responsible for operating the TACR is subject to internal and external damage to your body.

OBSERVATION | **All PPEs (Safety Equipment) should have certificate of authenticity.**

▪ Warnings

⚠ When operating with the TACR, do not let people stand near to or on the machine.

⚠ When performing any maintenance service, use PPEs equipment.

⚠ Before connecting or disconnecting the hydraulic hoses, relief the system pressure by activating the control with the tractor power switched off.

⚠ Periodically check the conservation status of the hydraulic hoses. If there are indications of oil leakage, replace the hose immediately, because the oil works under high pressure and may cause severe accidents.

⚠ Do not wear loose clothing, as it may get caught in the TACR.

⚠ When starting the tractor's engine, be properly seated in the operator's seat and be fully aware of how to correctly and safely handle both the tractor and the TACR. Always put the gear shift in neutral position, unplug the power take-off gear switch and place the hydraulic controls in neutral position.

⚠ Do not start the engine in a closed environment or with no proper ventilation since the exhaust gases are harmful to health.

⚠ When maneuvering the tractor to couple TACR, make sure you have the necessary space ant that there is no one too close, always maneuver at low gear and be prepared to brake in an emergency.

⚠ In closed curves, prevent tractor wheels from touching the TACR's head.

⚠ Do not perform adjustments while the TACR is in operation.

⚠ When working in sloped terrains, proceed with precautions, always trying to maintain the required stability. In case of imbalance, reduce acceleration, turn the wheels to the slope side of the terrain and never lift the TACR.

⚠ Always drive the tractor at speeds compatible to safety, especially during works in bumpy terrains or slopes, keep the tractor always engaged.

⚠ When driving the tractor in highways, keep the brake pedals interconnected.

⚠ Do not work with a tractor with a light rear. If its front tends to raise, add weights or ballasts to the front of the tractor or to its front wheels.

⚠ When leaving the tractor, put the gear lever in neutral position and apply the parking brake. Never leave the TACR hitched to the tractor when its hydraulic system is in the raised position.

⚠ All maintenance on the TACR must be carried while it is parked and with the tractor switched off.

⚠ Do not travel on highways especially at night. Use warning signs throughout the route.

⚠ If you need to travel on higways with the TACR, consult the transit authorities.

⚠ Do not allow untrained people to use the TACR, that is, people who do not know how to operate it correctly.

⚠ Do not transport or work with the TACR near obstacles, rivers or, streams.

▪ Warnings

⚠ The transportation of people on self-propelled machines and implements is forbidden.

⚠ Changes in the original features of the TACR are not allowed, as they may change safety, operation, and useful life characteristics oh the TACR.

⚠ Please read all safety information contained in this manual and the TACR carefully.

⚠ Read or explain all the procedures of this manual to the operator who cannot read.

⚠ Always check that the TACR is in perfect condition. In the event an irregularity that may interfere with the operation of the TACR, provide for its proper service prior to any work or transport.

⚠ Maintenance and specially inspection in risk areas of the TACR must be carried out only by qualified or trained workers, observing all safety guidelines. Before maintenance, disconnect all TACR drive systems.

⚠ Periodically check all TACR components before using it.

⚠ Due to the equipament used and work conditions on field or in maintenance areas, precautions are required. Baldan does not have direct control over precautions, therefore, it os the owner's responsibility to put into practice the safety procedures while working with the TACR.

⚠ Check the minimum power of the tractor recommended for each model of TACR. Only use tractor with compatible power and ballast.

⚠ When transportating the TACR, travel at terrain-compatible speeds and never exceed 10 Km/h, as this reduces maintenance and therefore extends the life of the TACR.

⚠ Alcoholic beverage or some medications may cause loss of reflexes and change the operator's physical conditions. Therefore, never operate TACR under the influence of any of these substances.

⚠ Read or explain all the procedures above to users that cannot read.

In case of doubts, refer to Post-Sales.
Telephone: 0800-152577 / E-mail: posvenda@baldan.com.br

Components

- **TACR - Remote Control Terracing Plough (Hydraulic Opening)**

1. Front frame
2. Right side frame
3. Right side frame (extension)
4. Left side frame
5. Left side frame (extension)
6. Leveling support
7. Wheel lift cylinder
8. Wheel support
9. Tire
10. Frame opening cylinder
11. Articulation support
12. Articulation beam
13. Bearing
14. Spool
15. Wiper
16. Disc
17. Hitch shackle
18. Hitch header
19. Header lift cylinder
20. Oil divider
21. Hydraulic hose support
22. Hydraulic hoses
23. Wrenches
24. Safety chain

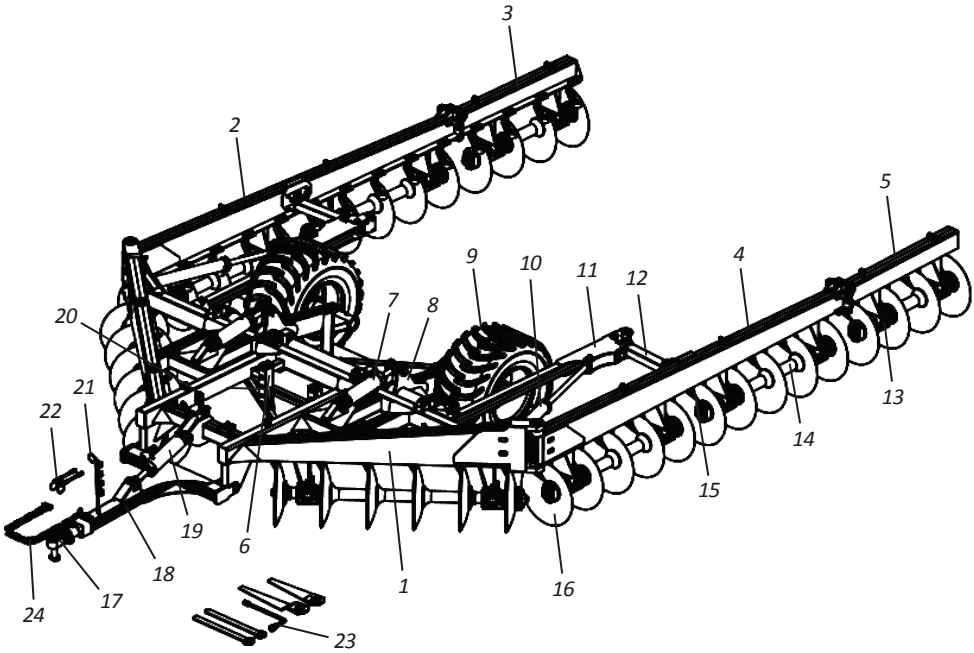

▪ Components

• TACR - Remote Control Terracing Plough (Manual Opening)

1. Front frame
2. Right side frame
3. Left side frame
4. Leveling support
5. Wheel lift cylinder
6. Wheel support
7. Tire
8. Articulation support
9. Articulation beam
10. Bearing
11. Spool
12. Wiper
13. Disc
14. Hitch shackle
15. Hitch header
16. Header lift cylinder
17. Oil divider
18. Hydraulic hose support
19. Hydraulic hoses
20. Wrenches
21. Safety chain

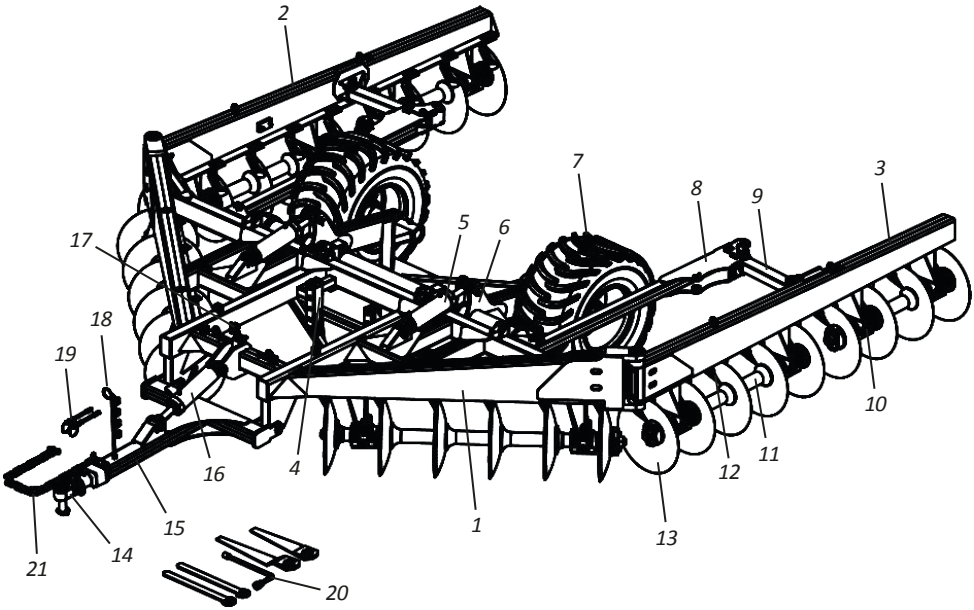

Dimensions

- TACR - Remote Control Terracing Plough (Part I)

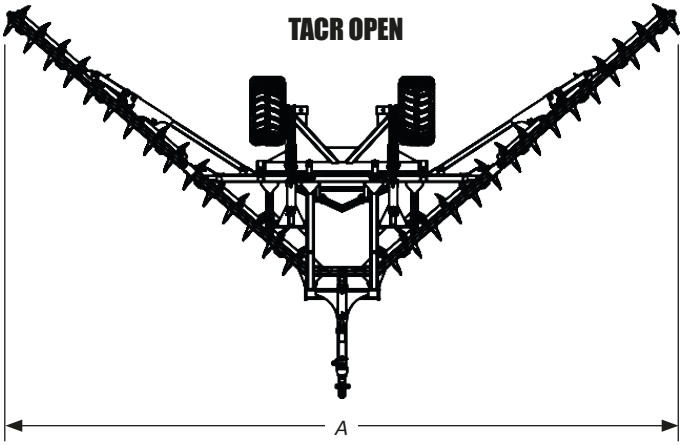

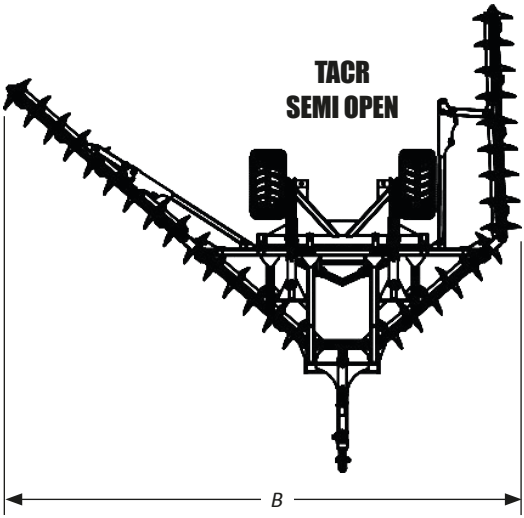

Model	Nr of Discs	Measure A (mm)	Measure B (mm)
TACR	24	9528	7806
	30	11576	8830
	34	12942	9513
	40	14990	10537

Dimensions

- TACR - Remote Control Terracing Plough (Part II)

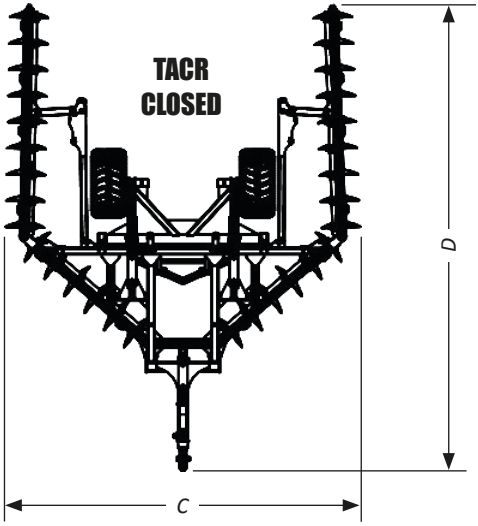

Model	Nr of Discs	Measure C (mm)	Measure D (mm)
TACR	24	6084	6624
	30	6084	7973
	34	6084	8870
	40	6084	10223

▪ Specifications

• TACR - Remote Control Terracing Plough (Hydraulic Opening)

Model	Nr of Discs	Working Width (mm)	Disc Spacing (mm)	Approximate Weight (Kg)	Required Tractor Power 4x4 (HP)
TACR	24	9528	450	5278	165 à 210
	30	11576	450	6070	210 à 260
	34	12942	450	6411	240 à 300
	40	14990	450	7372	280 à 350

Disc Diameter (ø) ..... 28"
Axle Diameter (ø) ..... 2.1/4"
Ground wheels ..... Single

Baldan reserves the right to change and/or perfect the technical characteristics of its products, without previous notice, and without obligation to proceed in the same way with the products previously manufactured. Technical specifications are approximate and informed under normal work conditions.

INTENDED USED OF THE TACR

- The **TACR** has been developed for the construction and refurbishment of wide-based terraces in slopes up to 12 degrees. For ease of transport, the side frames are equipped with hydraulic hinged devices that allow the operator to articulate the terracing plough without leaving the seat, providing convenience and speed in this operation.
- The **TACR** should only be driven and operated by a properly instructed operator.

PROHIBITED USE OF THE TACR

- To prevent damage, serious injury, or death, DO NOT carry people on any part of the **TACR.**
- Using the **TACR** to couple, tow, or push other implements or attachments is NOT allowed.
- The **TACR** should NOT be used by an inexperienced operator who does not know all the driving, command and operation techniques.

▪ Specifications

• TACR - Remote Control Terracing Plough (Manual Opening)

Model	Nr of Discs	Working Width (mm)	Disc Spacing (mm)	Approximate Weight (Kg)	Required Tractor Power 4x4 (HP)
TACR	24	9528	450	5174	165 à 210
	30	11576	450	5966	210 à 260
	34	12942	450	6411	240 à 300

Disc Diameter (ø) ..... 28"
Axle Diameter (ø) ..... 2.1/4"
Ground wheels ..... Single

Baldan reserves the right to change and/or perfect the technical characteristics of its products, without previous notice, and without obligation to proceed in the same way with the products previously manufactured. Technical specifications are approximate and informed under normal work conditions.

INTENDED USED OF THE TACR

- The **TACR** has been developed for the construction and refurbishment of wide-based terraces in slopes up to 12 degrees. For ease of transport, the side frames are equipped with hydraulic hinged devices that allow the operator to articulate the terracing plough without leaving the seat, providing convenience and speed in this operation.
- The **TACR** should only be driven and operated by a properly instructed operator.

PROHIBITED USE OF THE TACR

- To prevent damage, serious injury, or death, DO NOT carry people on any part of the **TACR.**
- Using the **TACR** to couple, tow, or push other implements or attachments is NOT allowed.
- The **TACR** should NOT be used by an inexperienced operator who does not know all the driving, command and operation techniques.

▪ Assembly

The **TACR** leaves the factory disassembled. To assemble it, follow the instructions below:

⚠ The **TACR** must be assembled by the resale, through people trained, instructed, and qualified for this work.

⚠ Before assembling the **TACR**, find a proper place for easy identification and assembly of its parts.

⚠ Do not wear loose clothing, as they may get caught in the **TACR**.

⚠ Use PPE (Safety Equipment).

• Wrench set

When assembling, disassembling, or servicing the **TACR**, use the wrench set that come with the terracing plough. The Wrench Set consists of:

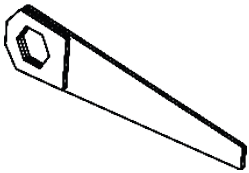

SMALL WRENCH FOR 2.1/4" AND 2.1/2" HEX NUT

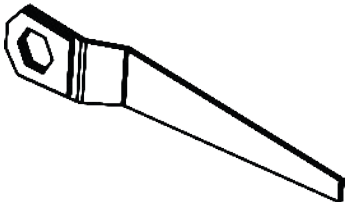

BIG WRENCH FOR 2.1/4" AND 2.1/2" HEX NUT

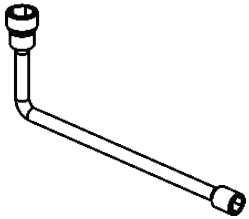

L-WRENCH FOR 5/8" AND 1" HEX NUT

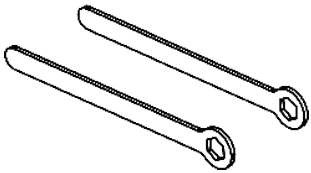

1.1/2" HEX NUT WRENCHES

⚠ ATTENTION | **If any wrench is lost or broken, get another one immediately. Always use original Baldan wrenches.**

▪ Assembly

• Assembling discs section

When assembling the **TACR**, always start with its disc section, proceeding as follows:

01 - Fit the shaft with (1) the concave thrust washer (2), flat washer (3), lock (4), nut (5), fastening it with the screw (6) and lock washer (7).

02 - Then, fit the shaft with (1) the disc (8), bearing (9), disc (8), reel (10), disc (8), reel (10), disc (8), bearing (9), and disc (8).

03 - When the assembly is complete with all discs, bearings, reels, fit the convex thrust washer (11), flat washer (12), lock (13), nut (14), tightening the assembling with a wrench.

04 - Then, fit the disc assembly and tighten the nut (14) by impacts. When almost obtaining maximum tightness, adjust the lock (13) with the convex washer (11), always tighting the nut until it matches the drilling, fasten it with the screw (15), lock washer (16).

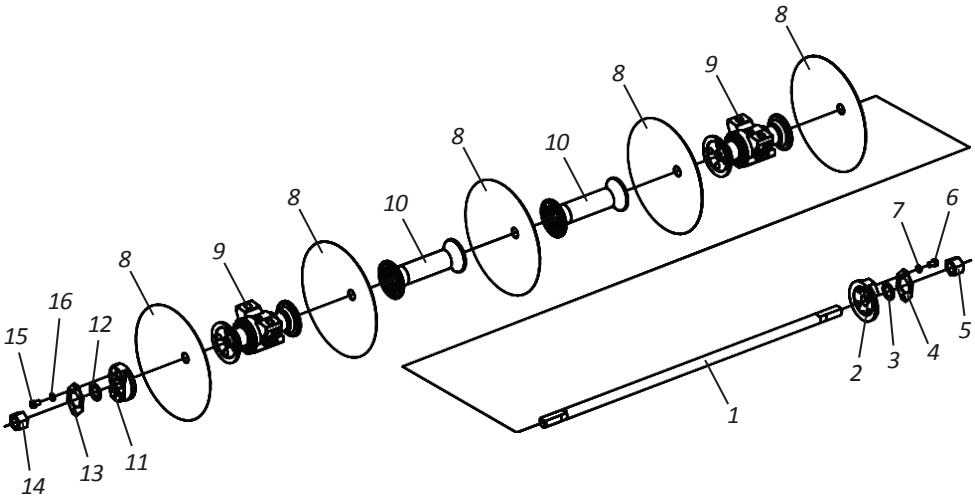

ATENTION | **Check the right side of reels and bearings according to disc concavity.**

Assembly

• Assembly of the disc section - TACR 24 discs

Seed the assembly of the disc sections of the TACR 24 discs bellow.

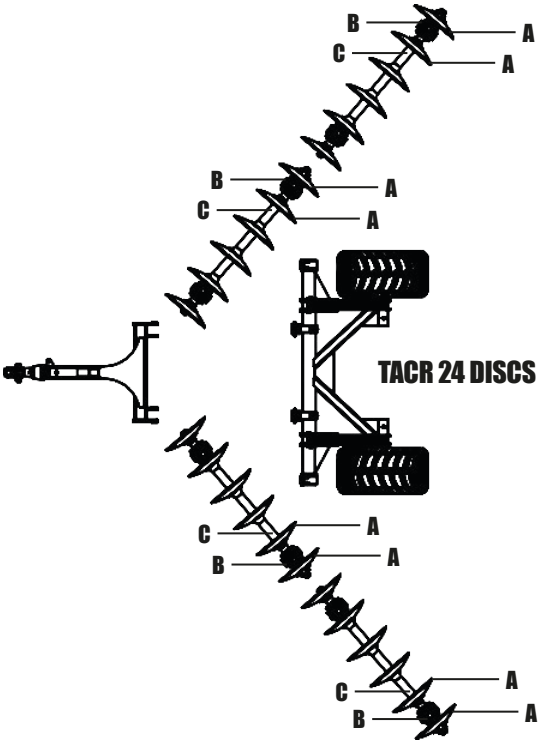

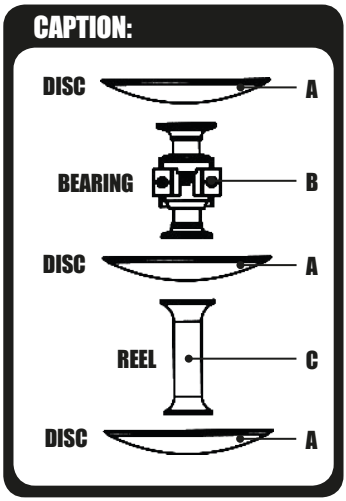

Assembly

• Assembly of the disc section - TACR 30 discs

Seed the assembly of the disc sections of the TACR 30 discs bellow.

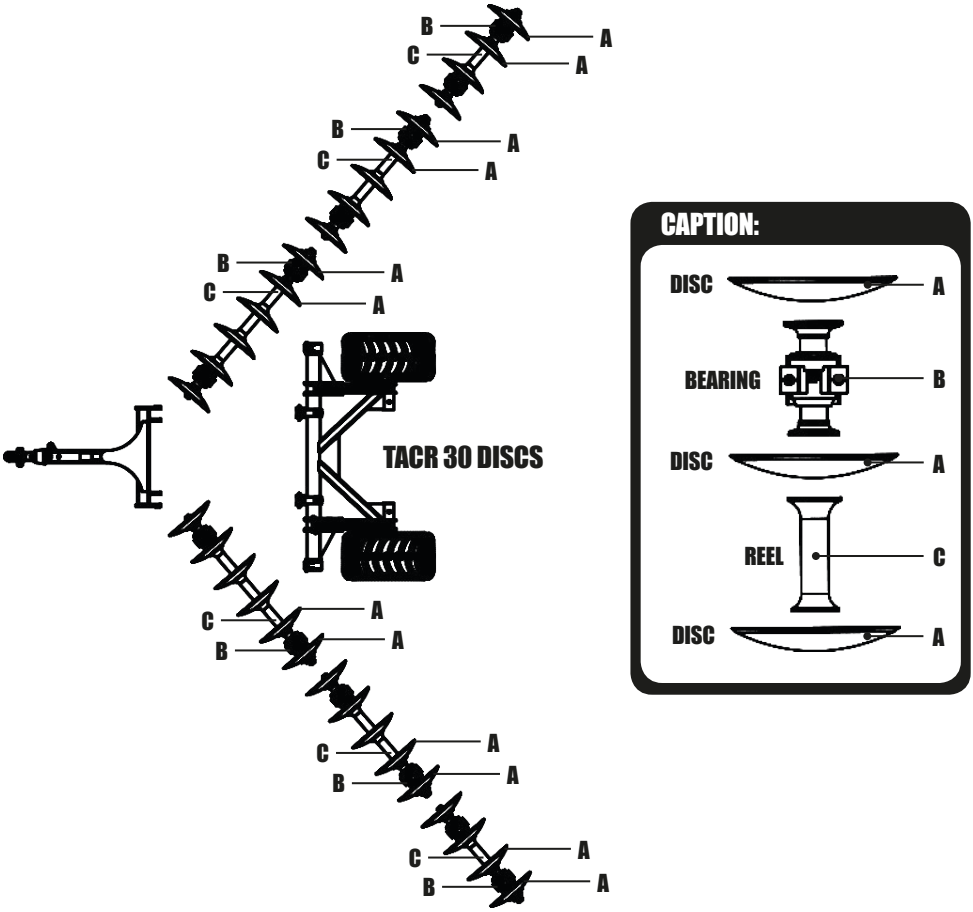

Assembly

• Assembly of the disc section - TACR 34 discs

Seed the assembly of the disc sections of the TACR 34 discs bellow.

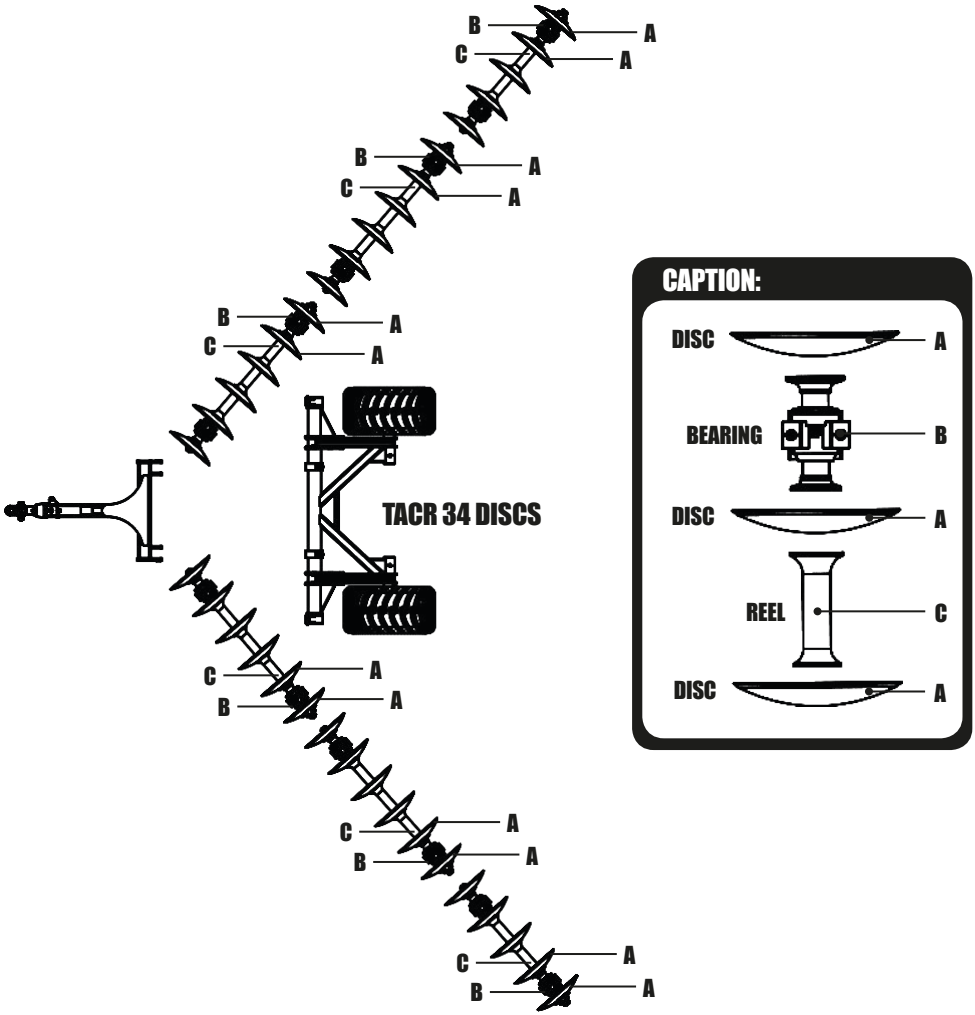

Assembly

• Assembly of the disc section - TACR 40 discs

Seed the assembly of the disc sections of the TACR 40 discs bellow.

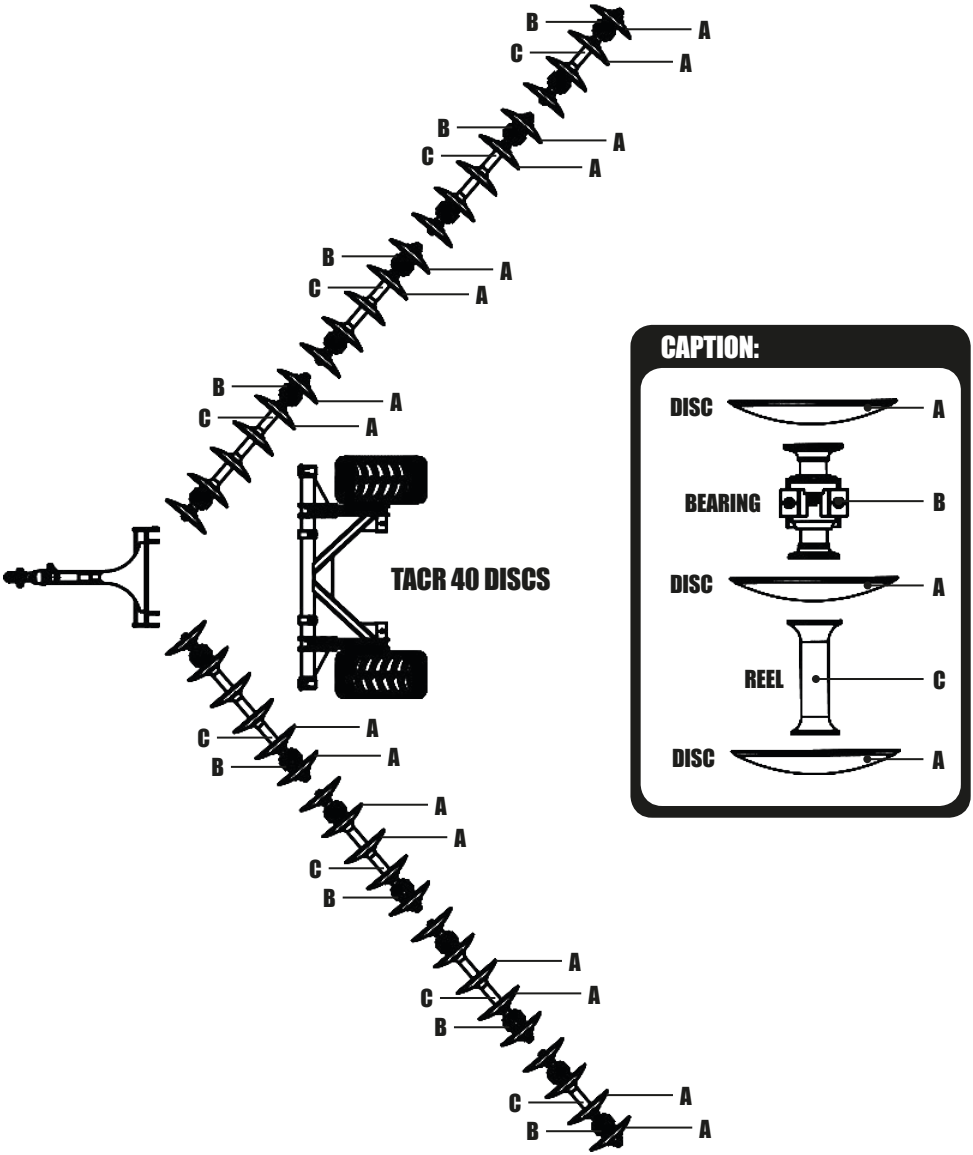

▪ Assembly

• Assembly of the disc section on the center frame

To assemble the disc sections (1) to the center frame (2), proceed as follows:

01 - Lift one side of the center frame (2) and place the disc section (1) in line and match the hole of the shoes (3) with those of the bearings and fastening it with the screws (4), locks (5), flat washers (6), lock washers (7), and nuts (8).

02 - Then lift the other side of the center frame (2) and repeat the operation checking the concavity of the discs from one section to the other, which should be opposing.

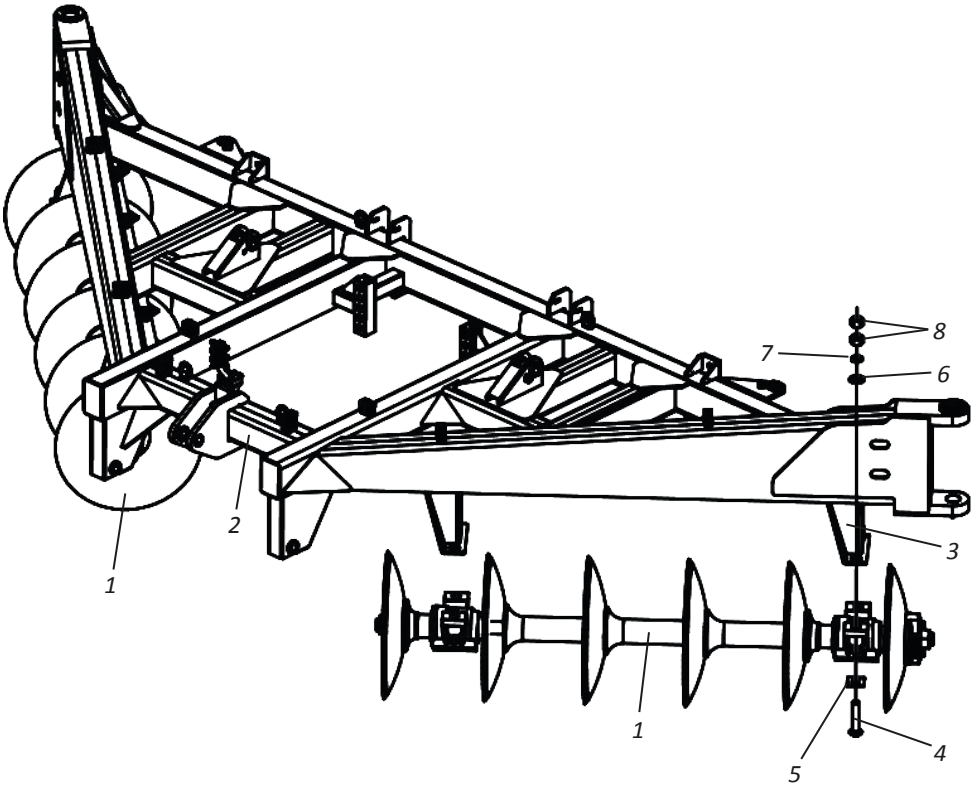

⚠ ATTENTION | **When assembling the disc sections on the center frame, note that the center frame shoes must face the concavity of the discs.**

▪ Assembly

• Assembly of the left side frame to the center frame

To assemble the left side frame (1) to the center frame (2), proceed as follows:

01 - Attach the left side frame (1) to the center frame (2), fastening through the pin (3), flat washer (4) and cotter pin (5).

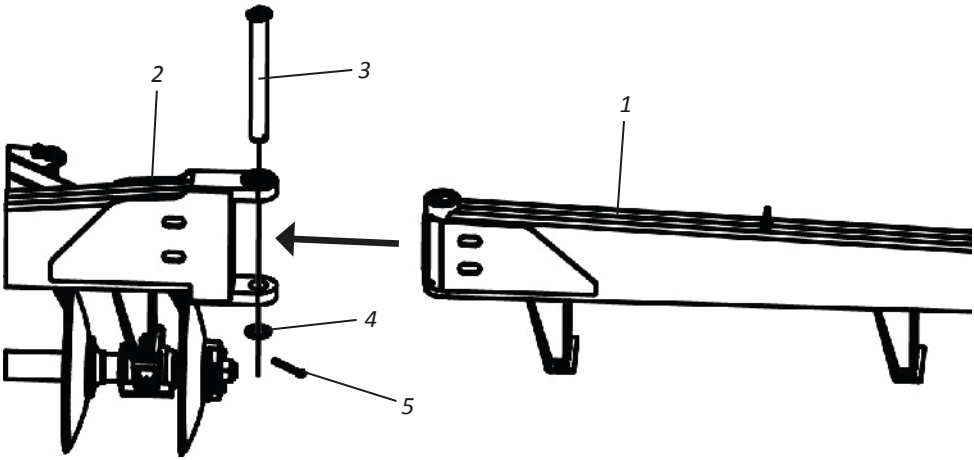

NOTE Repeat the above procedure to assemble the right side frame to the center frame.

▪ Assembly

• Assembly of the disc section on the left side frame

To assemble the disc sections (1) on the left side frame (2), proceed as follows:

01 - Lift the left side frame (2) and place the disc section (1) in line and match the holes of the shoes (3) with those of the bearings and fastening it with the screws (4), locks (5), flat washers (6), lock washers (7), and nuts (8).

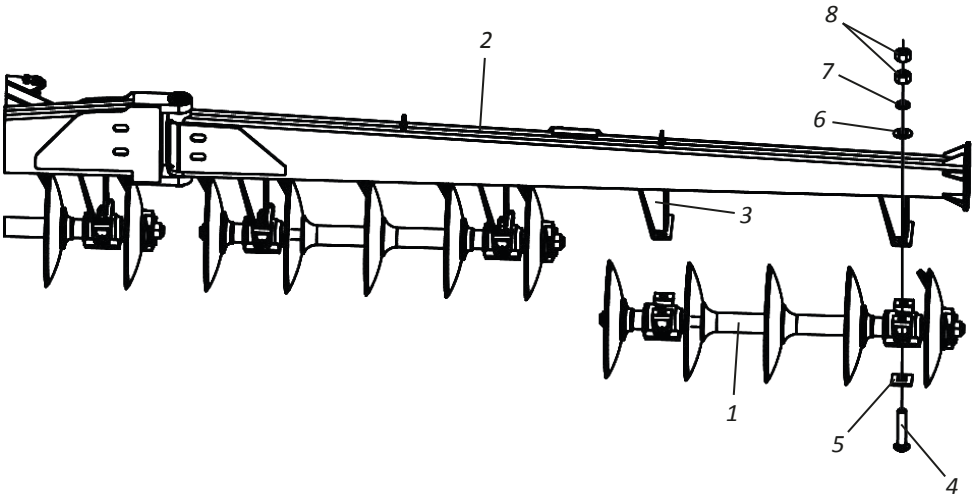

IMPORTANT **When assembling the disc sections on the "extension" side frames, note that the shoes on the "extension" side frames must face the concavity of the discs.**

NOTE **Repeat the above procedure to assemble the disc sections on the right side frame.**

▪ Assembly

• Assembly of the "extension" left side frame on the left side frame

To assemble of the "extension" side frame (1) to the left side frame (2), proceed as follows:

01 - Couple the left "extension" side frame (1) to the left side frame (2), fastening with the screws (3), and nuts (4).

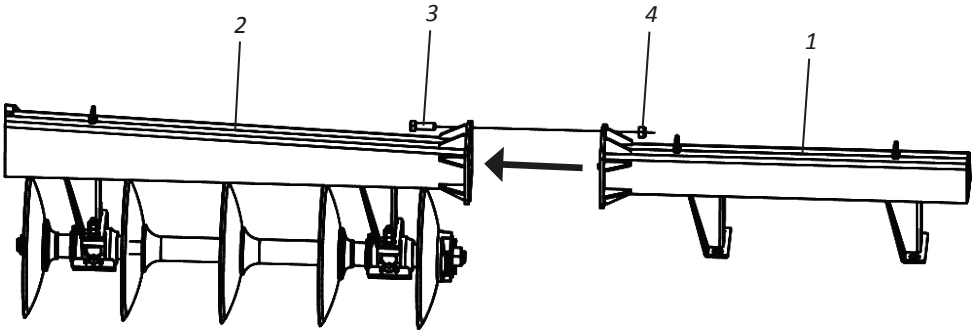

ATTENTION | **The TACR 24/30/34 discs do not have a left or right "extension" side frame (1).**

NOTE | **Repeat the above procedure to assemble the "extension" right side frame to the right side frame.**

▪ Assembly

• Assembly of the disc section on the "extension" left side frame

To assemble the disc sections (1) on the left "extension" side frame (2), proceed as follows:

01 - Lift the "extension" left side frame (2) and place the disc section (1) in line and make the holes of the shoes (3) match with the bearings and make the fastening with the screws (4), locks (5), flat washers (6), lock washers (7) and nuts (8).

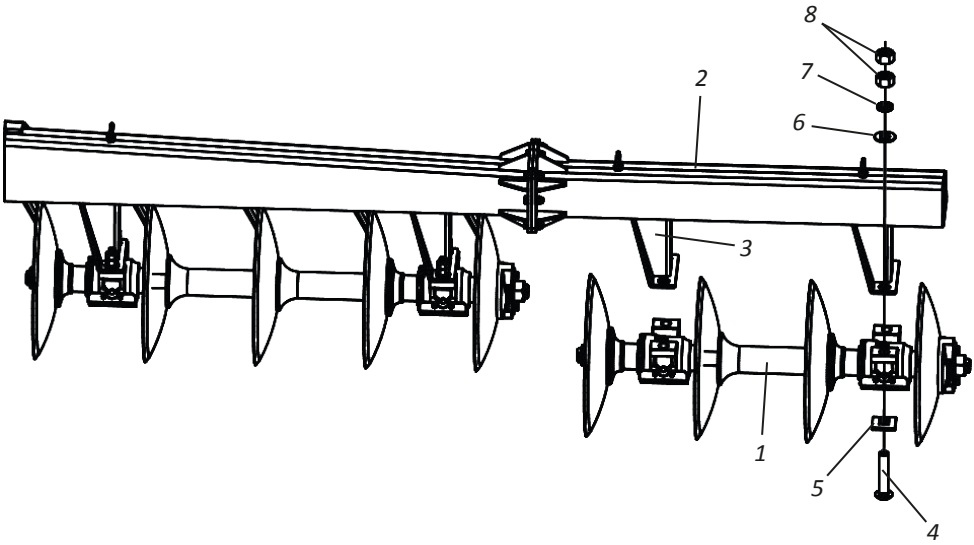

ATTENTION | **The TACR 24/30/34 discs do not have a left or right "extension" side frame (2).**

IMPORTANT | **When assembling the disc sections on the "extension" side frames, note that the shoes on the "extension" side frames must face the concavity of the discs.**

NOTE | **Repeat the above procedure to assemble the disc sections on the "extension" right side frame.**

▪ Assembly

• Front and rear wiper assembly

To assemble the front and rear wipers (1) on the side frames (2), proceed as follows:

01 - Couple the front and rear wipers (1) to the frames (2) fastening through the screws (3), flat washers (4), lock washers (5), and nuts (6).

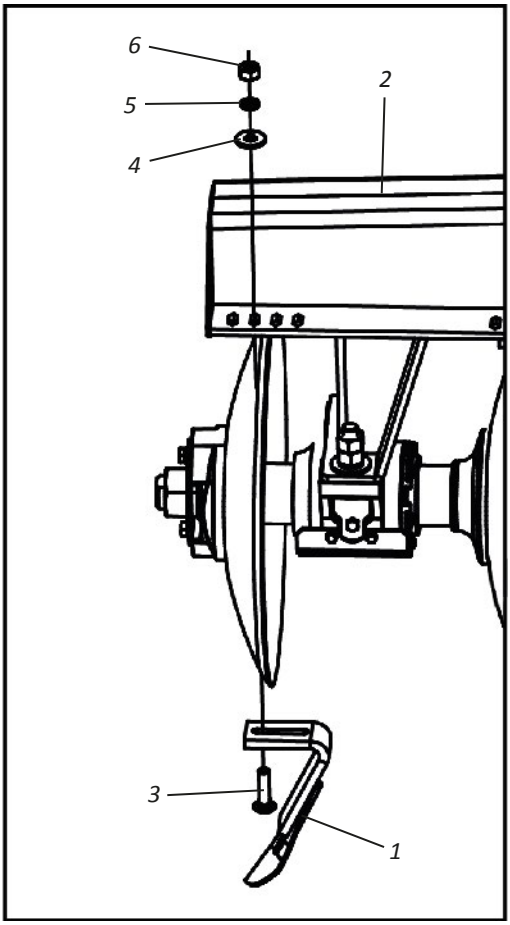

⚠ ATTENTION | **When assembling the wipers, they should be 0,5 to 1,0 cm away from the discs.**

▪ Assembly

• Assembly of the right side articulation support (Hydraulic Opening)

To assemble the hydraulic cylinder and the right side articulation support, proceed as follows:

01 - Couple the articulation support (1) to the center frame (2), fastening it through the pin (3), lock washer (4), and screw (5).

02 - Then attach the articulation beam (6) to the articulation support (1) fastening through the pins (8 and 9), flat washers (10), lock (11), cotter pin (12), and attatch to the right side frame (13) fastening through the pin (14), lock washer (15), and screw (16).

03 - Then attach the base of the hydraulic cylinder (17) to the center frame (2), fastening through the pin (18), lock washer (19), screw (20), and the rod the articulation support (1), through pin (21), lock washer (22) and screw (23).

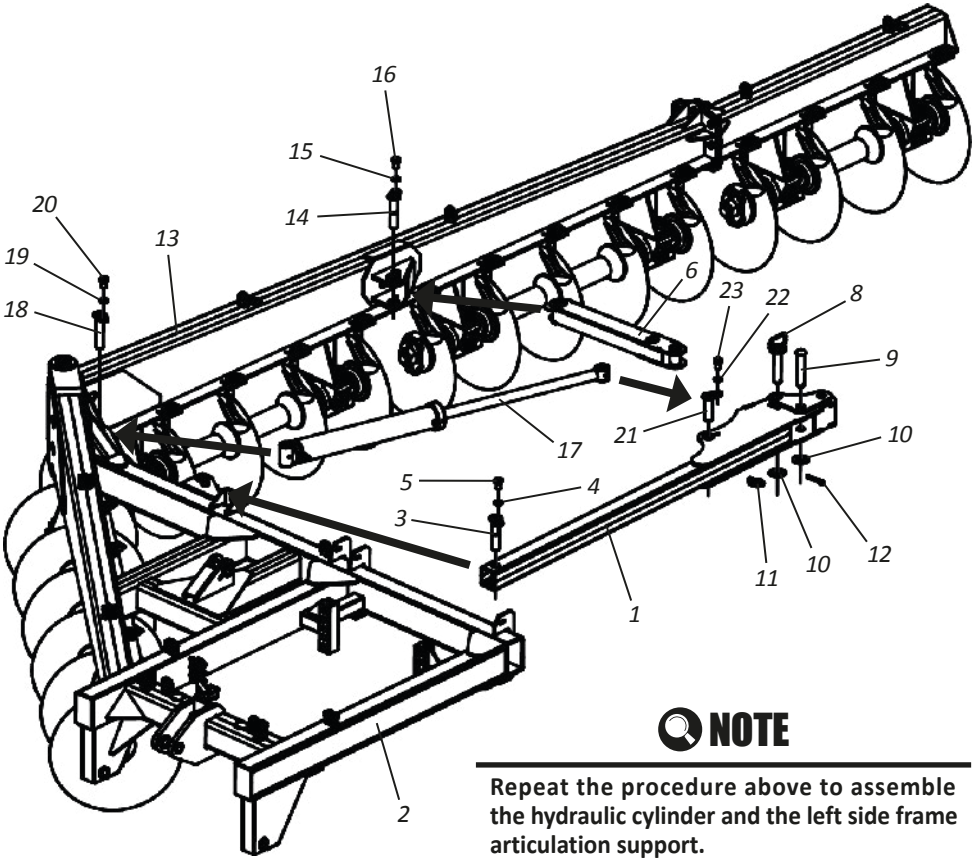

NOTE

Repeat the procedure above to assemble the hydraulic cylinder and the left side frame articulation support.

▪ Assembly

• Assembly of the right side articulation support (Manual Opening)

To assemble the hydraulic cylinder and the right side articulation support, proceed as follows:

01 - Couple the articulation support (1) to the center frame (2), fastening it through the pin (3), lock washer (4), and screw (5).

02 - Then couple the articulation beam (6) to the articulation support (1) fastening through the pins (8 and 9), flat washers (10), lock (11), cotter pin (12) and attach to the right side frame (13) fastening through the pin (14), lock washer (15) and screw (16).

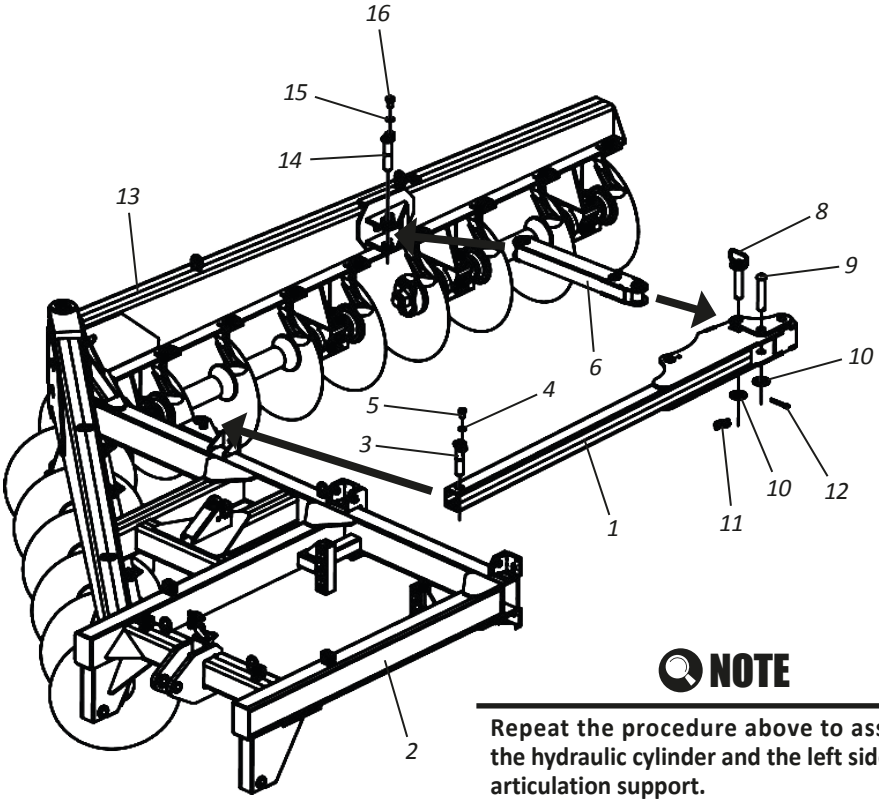

NOTE

Repeat the procedure above to assemble the hydraulic cylinder and the left side frame articulation support.

▪ Assembly

• Assembly of the leveling support

To assemble the leveling support (1), proceed as follows:

01 - Couple the leveling support (1) to the center frame (2), fastening through the pins (3), flat washers (4) and ring locks (5).

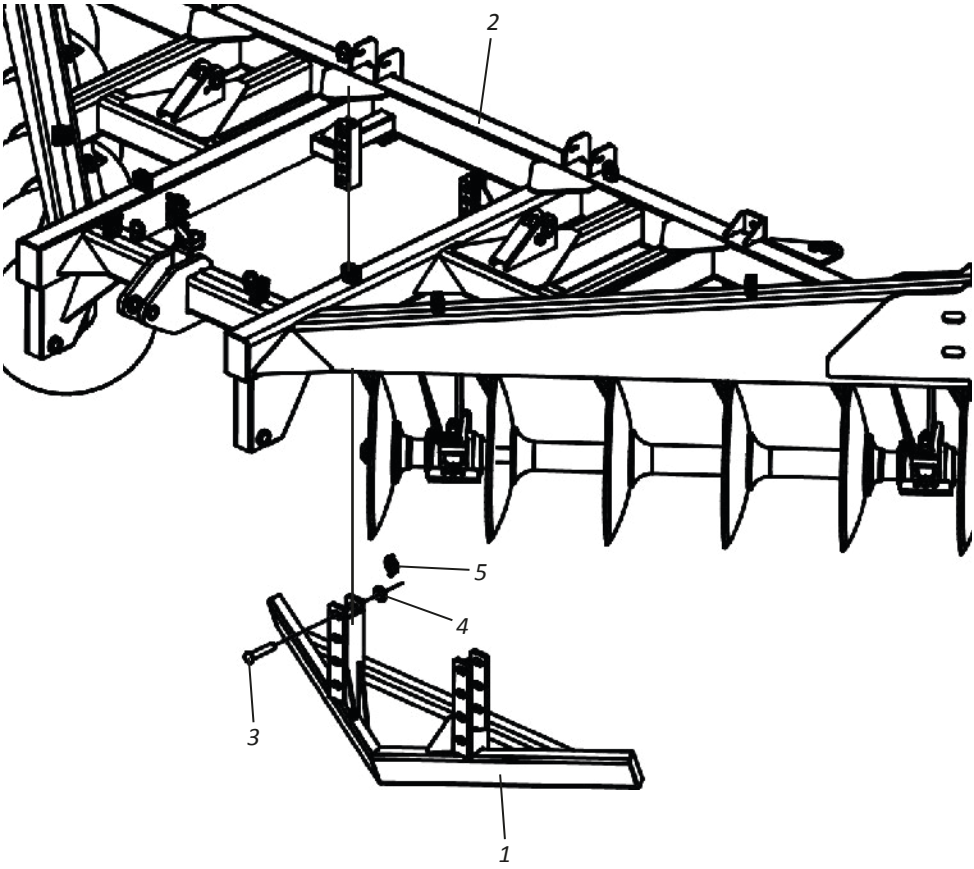

▪ Assembly

• Assembly of the wheel and hydraulic cylinder support - Part I

To assemble the wheel support and hydraulic cylinders, proceed as follows:

01 - Couple the mounting supports (1) to the center frame (2) and fit the cap screws (3), lock washers (4), nuts (5) whithout tightening them.

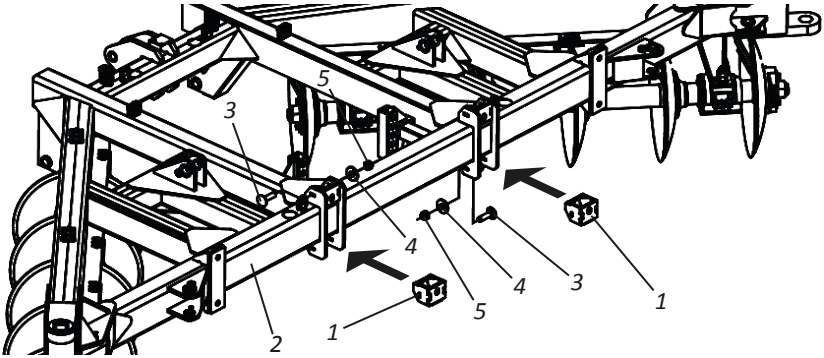

02 - Then attach the bearings (6), lower (7) and upper (8) bearings to the wheel support (9).

03 - Then fasten the lower (7) and upper (8) bearings to the mounting supports (1) using the screws (10), lock washers (11), and nuts (12) without tightening them.

04 - The fasten the bearings (6) to the center frame (2) using the screws (13), lock washers (14), and nuts (15) by tightening them.

05 - Then tighten the screws (10), lock washers (11), nuts (12) and lastly the cap screws (3), flat washers (4) and nuts (5).

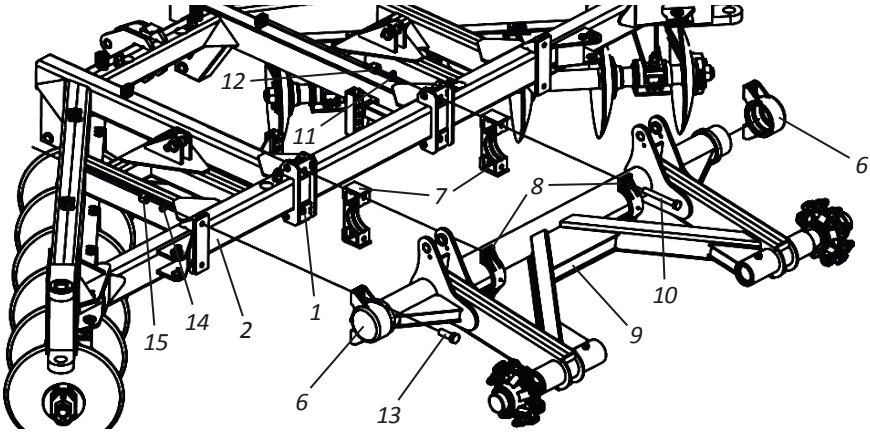

▪ Assembly

• Assembly of the wheel and hydraulic cylinder support - Part II

06 - Finish by fastening the hydraulic cylinder bases (16) to the center frame (2) through the pins (17), lock washers (18), screws (19) and the rods in the wheel support (9), through the pins (20), screws (21), lock washers (22) and nuts (23).

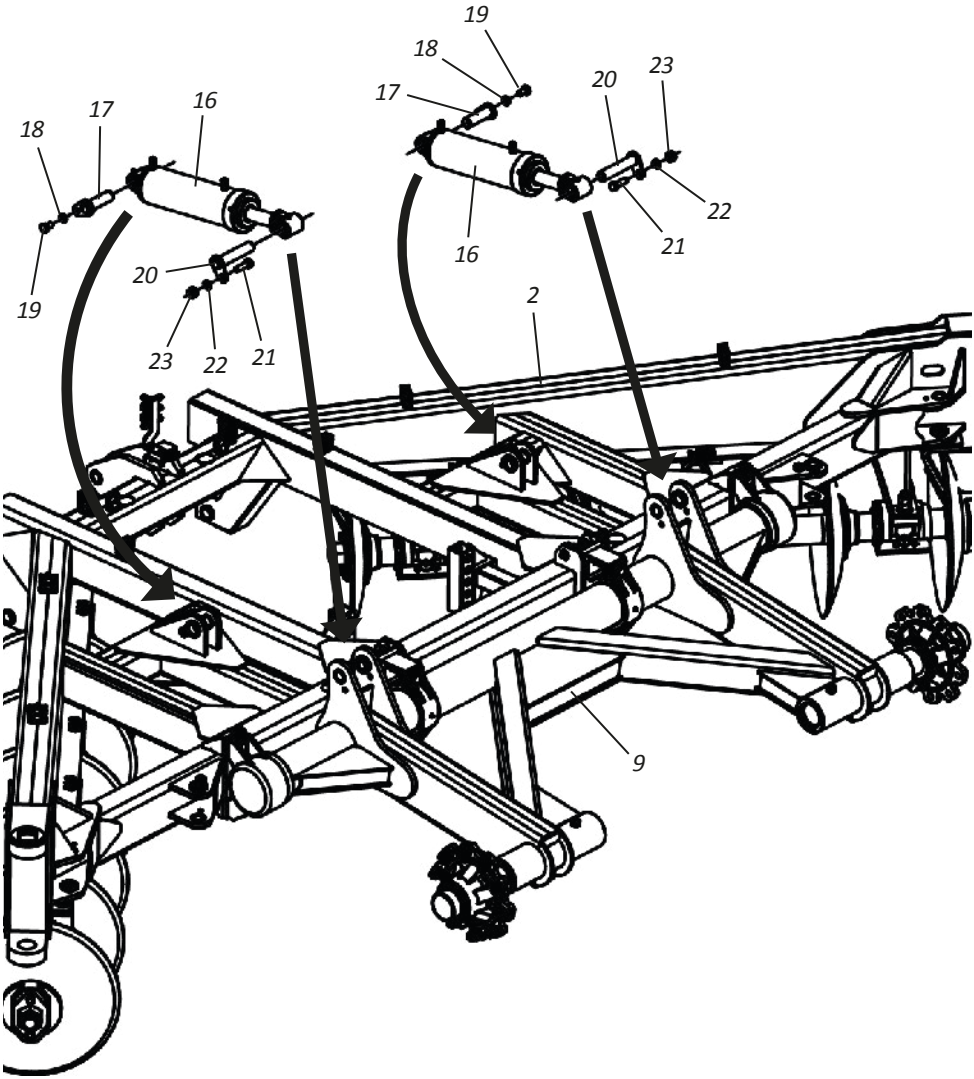

▪ Assembly

• Assembly of the tires

To assemble the tires on the wheel support, proceed as follows:

01 - Couple the tires (1) to the wheel support (2), fastening through the screws (3), and nuts (4).

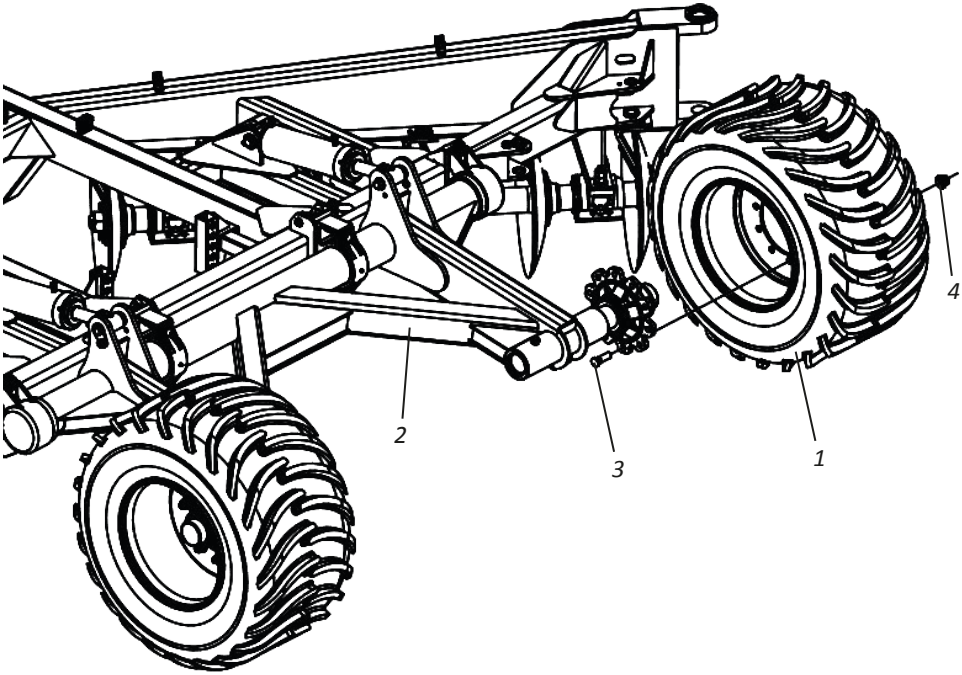

⚠ ATTENTION

Check the proper tire calibration on page 59.

▪ Assembly

• Assembly of the coupling head

To assemble the coupling head to the center frame, proceed as follows:

01 - Couple the coupling head (1) to the central frame (2), fastening through the pins (3), flat washers (4) and cotter pins (5).

02 - Then attach the hydraulic cylinder (6) to the center frame (2), fastening it through the pin (7), flat washer (8) and cotter pin (9).

03 - Then attach the hydraulic cylinder rod (6) to the coupling head (1), fastening it through the pin (10), lock washer (11) and screw (12).

04 - Finish by coupling the hose support (13) and the lock nut (14).

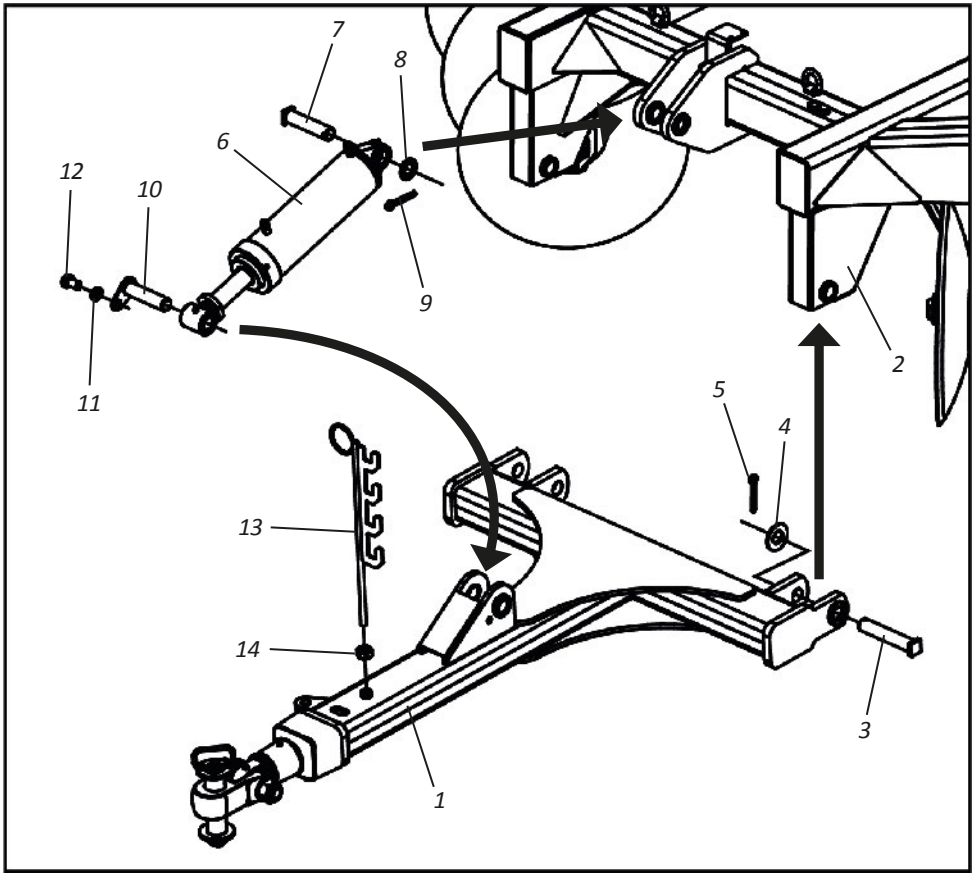

Assembly

- Assembly of the hydraulic system - TACR 24 / 30 / 34 / 40 discs (Hydraulic Opening)

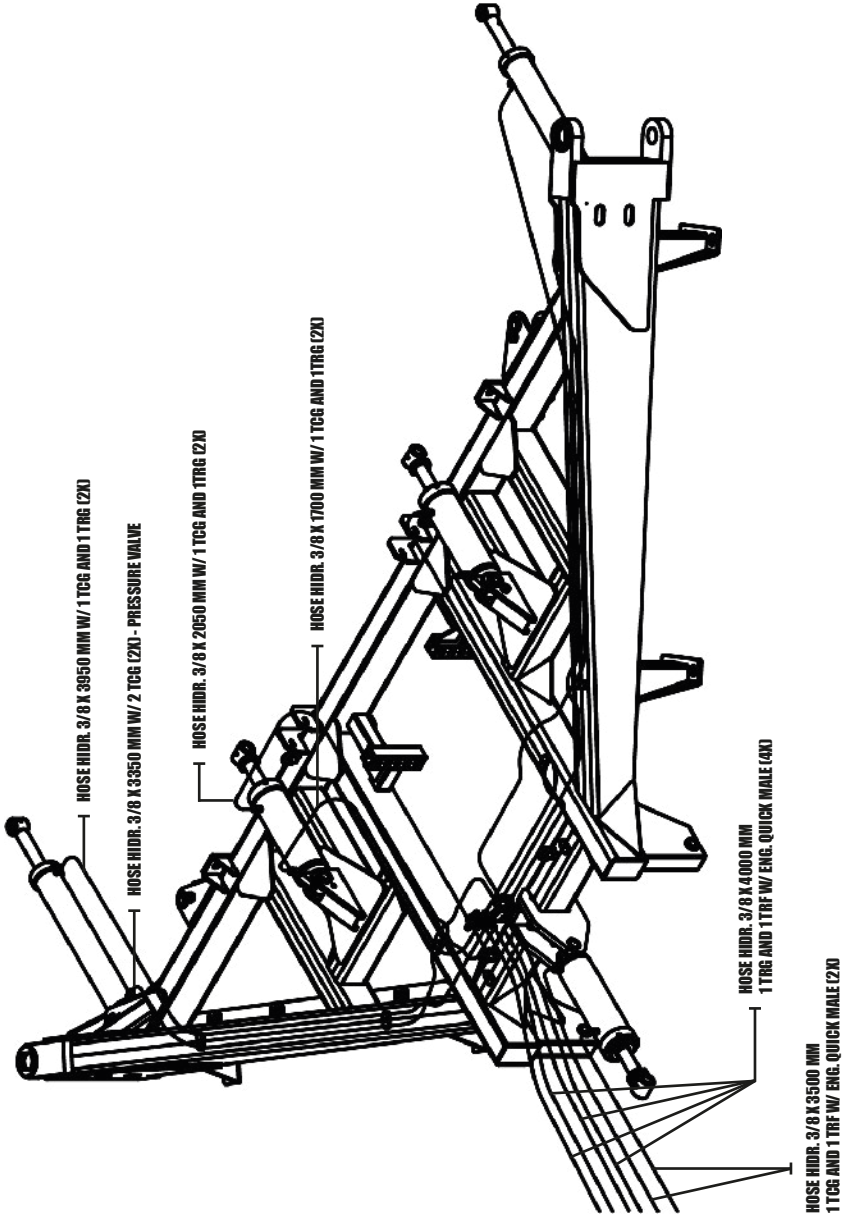

Assembly

- Assembly of the hydraulic system - TACR 24 / 30 / 34 discs (Hydraulic Opening)

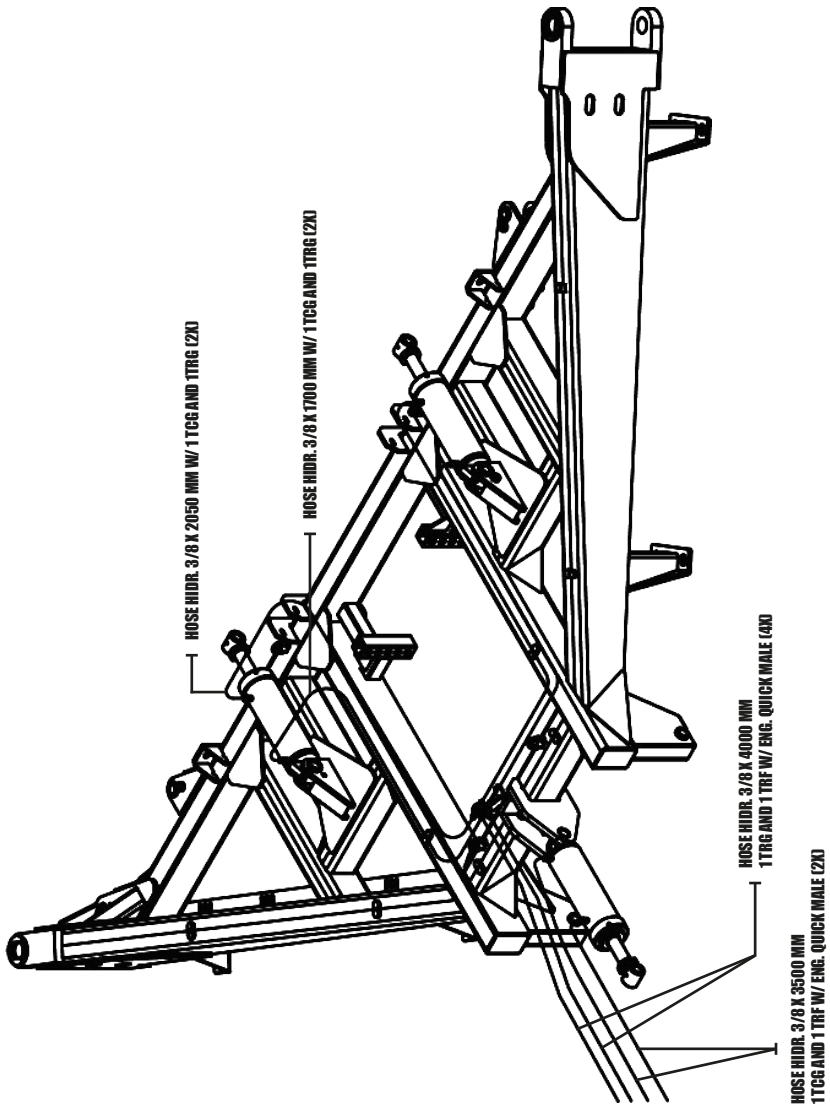

▪ Hitch

• Tractor Hitch

To connect the **TACR** to tractor drawbar, follow the instructions bellow:

- Before hitching the **TACR**, look for a sale and easily accessible place.
- Always use low gear with low acceleration.
- Before connecting or disconnecting the hydraulic hoses, stop the engine and relieve the pressure of the circuit by fully operating the control levers.
- When relieving system pressure, make sure that there are no accidents while the equipment is moving.

Observe the instructions above, proceed as follows:

01 - Slowly approach the tractor to the **TACR** on reserve, paying attention when to use the brakes.

02 - Then, attach the coupling head (1) to the tractor fastening through the coupling pin (2), flat washer (3), and cotter pin (4).

03 - Then, connect the hoses (5) to the tractor quick hitch.

04 - Finish the coupling of the **TACR**, by attaching the safety chain (6) on the tractor.

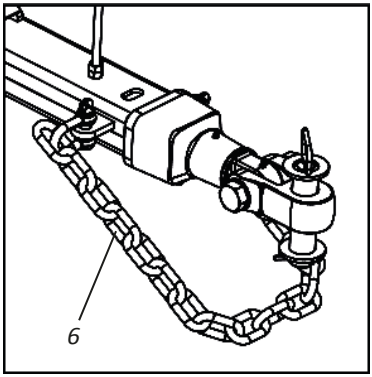

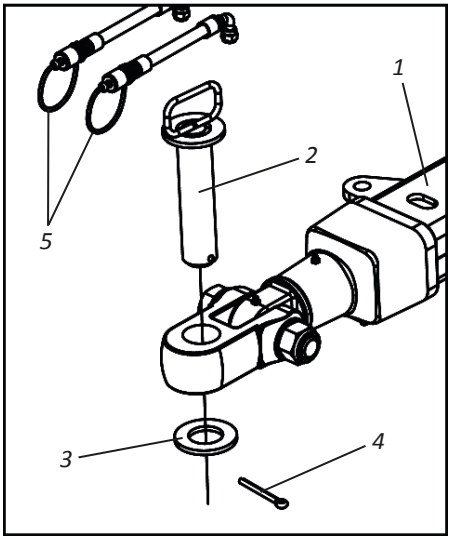

⚠ ATTENTION

The safety chain (6) provides increased safety during work and transport of the TACR, preventing it from disconnect from the tractor in case of breakage of the coupling pin (2). Thus, we do not recommend working or transporting the TACR without fastening the safety chain (6) first.

▪ Levelling

• Leveling of the terracing plough

To level the **TACR**, proceed as follows:

01 - Place the tractor and the **TACR** on a plain surface.
02 - Then, lift the tires (1) through the hydraulic cylinders (2).
03 - Then level the **TACR** through the cylinder (3) until it reaches the desired level.

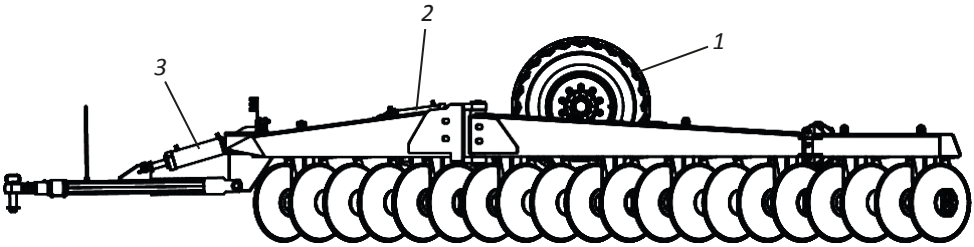

⚠ ATTENTION

The discs must be parallel to the ground, i.e., they all must touch the same plane. On already prepared terrains, the terrace can be started with a slight slope on the disc sections, i.e. with a slightly activated hydraulic cylinder (3).

▪ Adjustment

• Transport procedure (Hydraulic Opening) - Part I

To place the **TACR** (Hydraulic Opening) in transport position, proceed as follows:

01 - First, loosen the ring locks (1), flat washers (2) and remove the pins (3) from the articulation supports (4) to unlock the articulation beams (5).

02 - The engage the hydraulic cylinders (6) to raise the **TACR**.

03 - Then operate the hydraulic cylinders (7) and fully close the side frames (8 and 9).

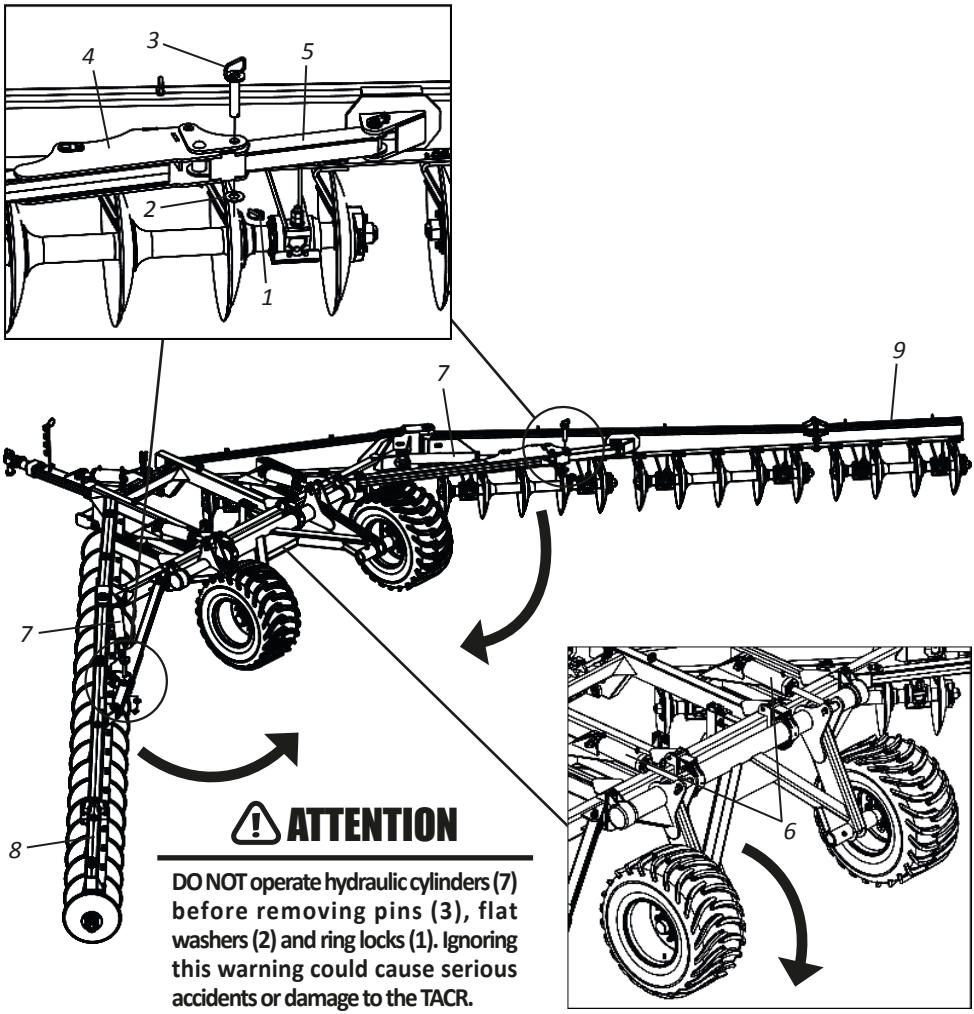

⚠ ATTENTION

DO NOT operate hydraulic cylinders (7) before removing pins (3), flat washers (2) and ring locks (1). Ignoring this warning could cause serious accidents or damage to the TACR.

▪ Adjustment

- **Transport procedure (Hydraulic Opening) - Part II**

04 - Then replace the pins (3), flat washers (2) and ring locks (1) to lock the articulation beams (5) to the articulation supports (4).

05 - Finish by activating the hydraulic cylinder (10) of the coupling head to level the **TACR** for transportation.

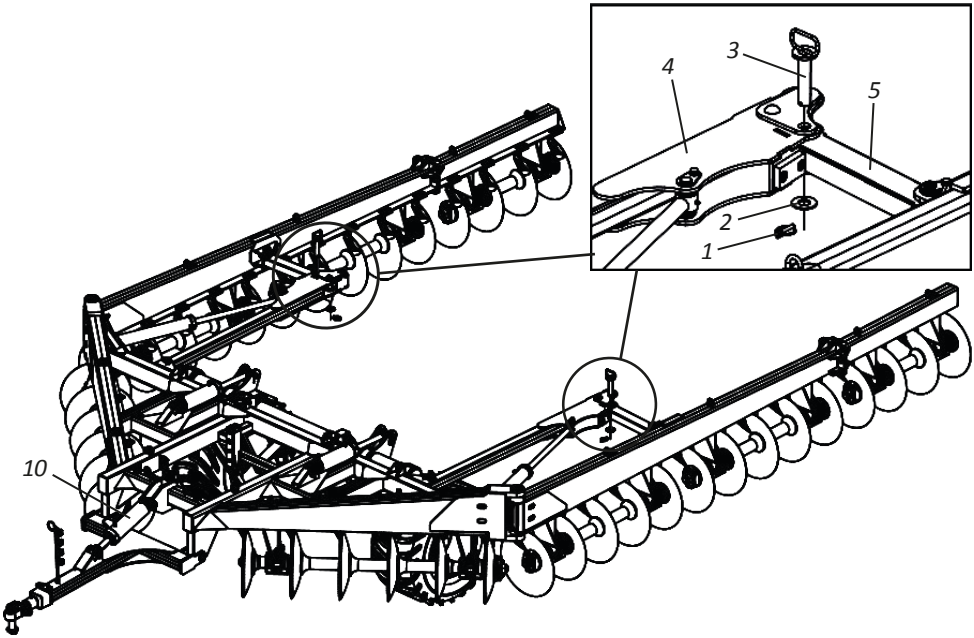

⚠ ATTENTION **DO NOT transport the TACR without first locking the articulation beams (5) into the articulation supports (4) through the pins (3), flat washers (2) and ring locks (1).**

▪ Adjustment

• Transport procedure (Manual Opening) - Part I

To place the **TACR** (Manual Opening) in transport position, proceed as follows:

01 - First, loosen the ring locks (1), flat washers (2) and remove the pins (3) from the articulation supports (4) to unlock the articulation beams (5).

02 - Then engage the hydraulic cylinders (6) to raise the **TACR**.

03 - Then manually close the side frames (7 and 8) fully.

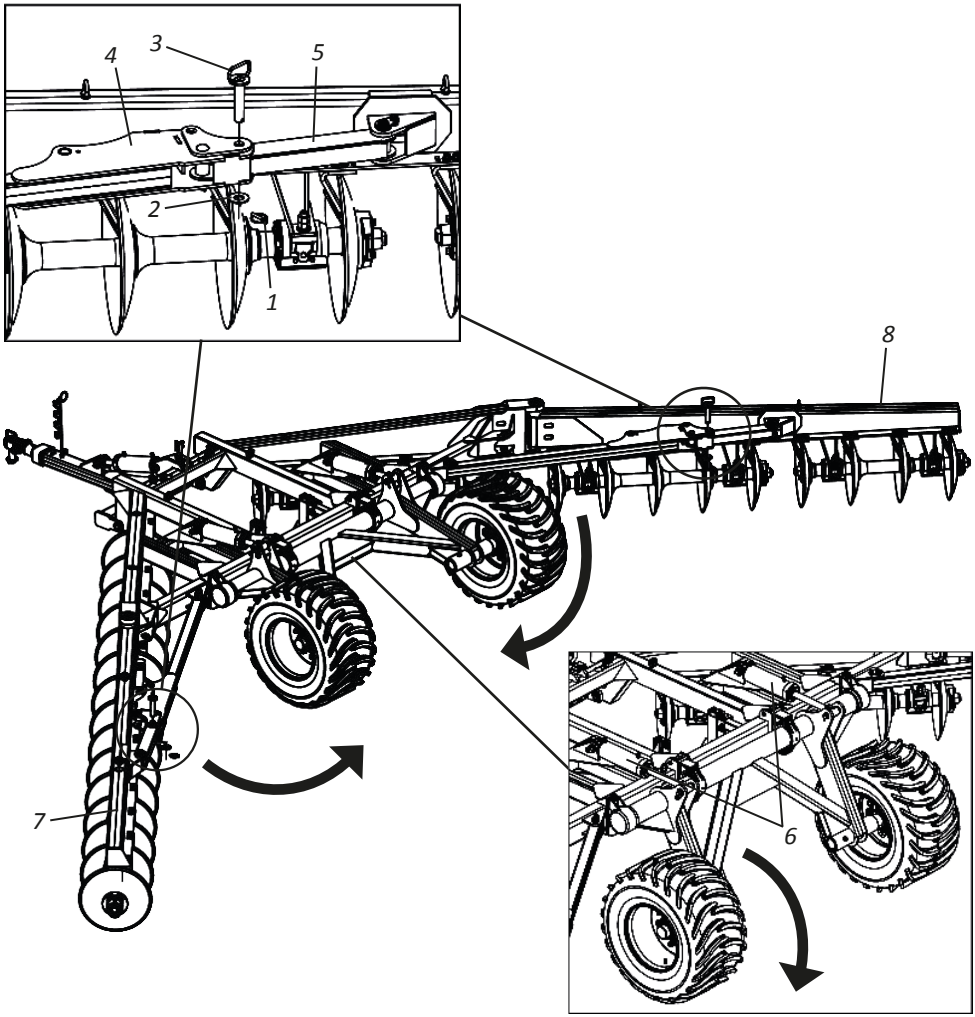

▪ Adjustment

• Transport procedure (Manual Opening) - Part II

04 - Then replace the pins (3), flat washers (2) and ring locks (1) to lock the articulation beams (5) to the articulation supports (4).

05 - Finish by activating the hydraulic cylinder (9) of the coupling head to level the **TACR** for transport.

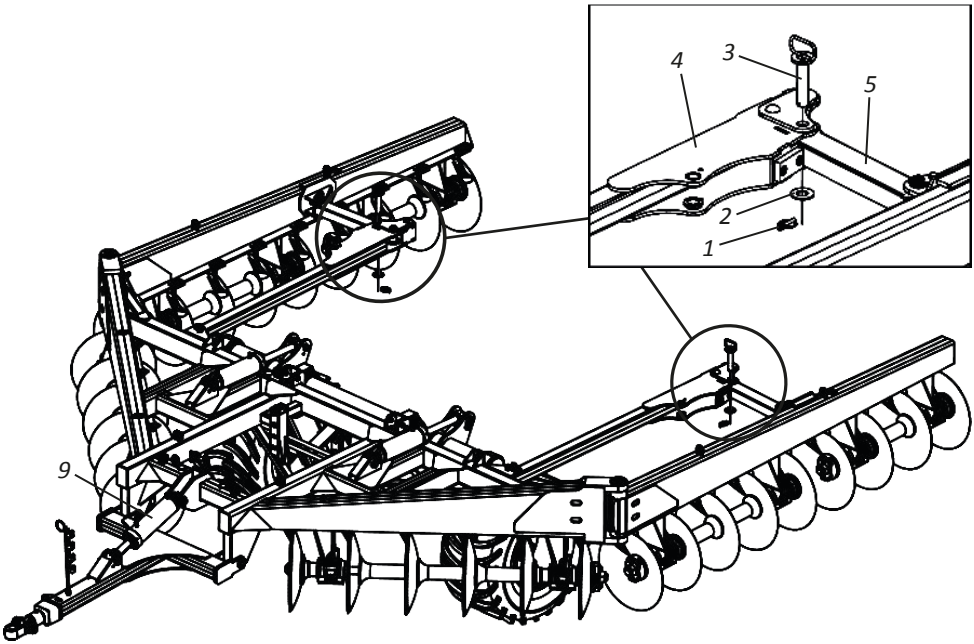

⚠ ATTENTION **DO NOT transport the TACR without first locking the articulation beams (5) into the articulation supports (4) through the pins (3), flat washers (2) and rings locks (1).**

▪ Adjustment

• Working Procedure (Hydraulic Opening) - Part I

To place the **TACR** (Hydraulic Opening) in the working position, proceed as follows:

01 - First, loosen the ring locks (1), flat washers (2) and remove the pins (3) from the articulation supports (4) to unlock the articulation beams (5).

02 - Then engage the hydraulic cylinders (6) and fully open the side frames (7 and 8).

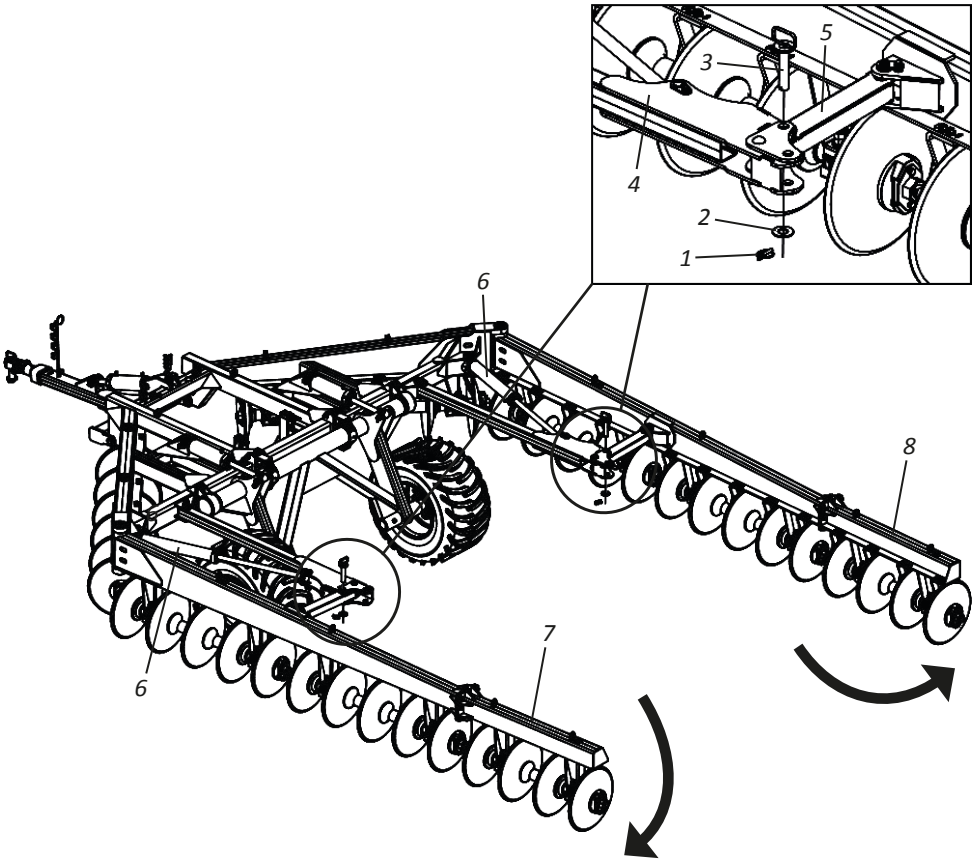

⚠ ATTENTION **DO NOT operate hydraulic cylinders (6) before removing pins (3), flat washers (2) and ring locks (1). Ignoring this warning could cause serious accidents or damage to the TACR.**

▪ Adjustment

• Working procedure (Hydraulic Opening) - Part II

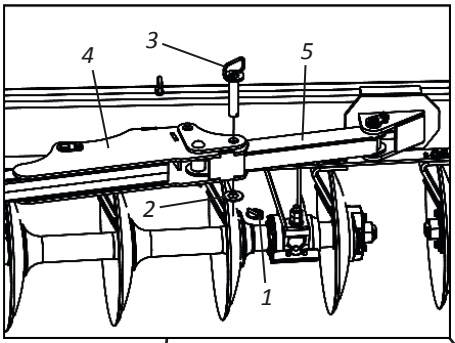

03 - Then replace the pins (3), flat washers (2) and ring locks (1) to lock the articulation beams (5) to the articulation supports (4).

04 - Then engage the hydraulic cylinders (9) to fully lower the **TACR**.

05 - Finish by activating the hydraulic cylinder (10) of the coupling head to level the **TACR** for work.

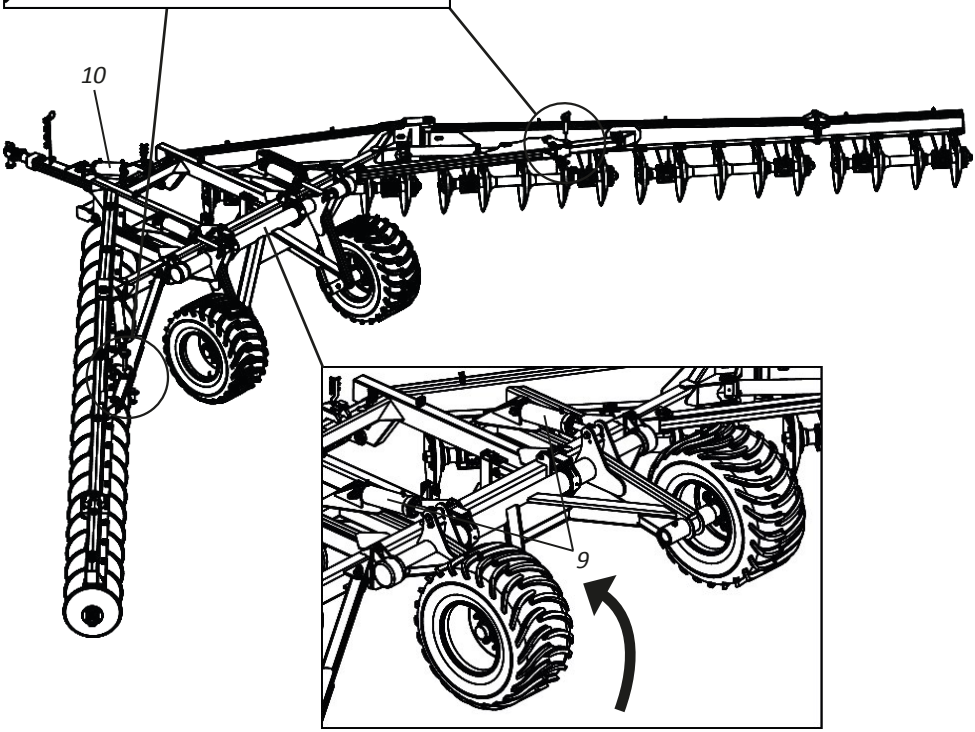

⚠ ATTENTION

DO NOT start work with the TACR without first locking the articulation beams (5) in the articulation supports (4) through the pins (3), flat washers (2) and ring locks (1).

▪ Adjustment

• Working procedure (Manual Opening) - Part I

To place the **TACR** (Manual Opening) in working position, proceed as follows:

01 - First, loosen the ring locks (1), flat washers (2) and remove the pins (3) from the articulation supports (4) to unlock the articulation beams (5).

02 - Then manually close the side frames (6 and 7) completely.

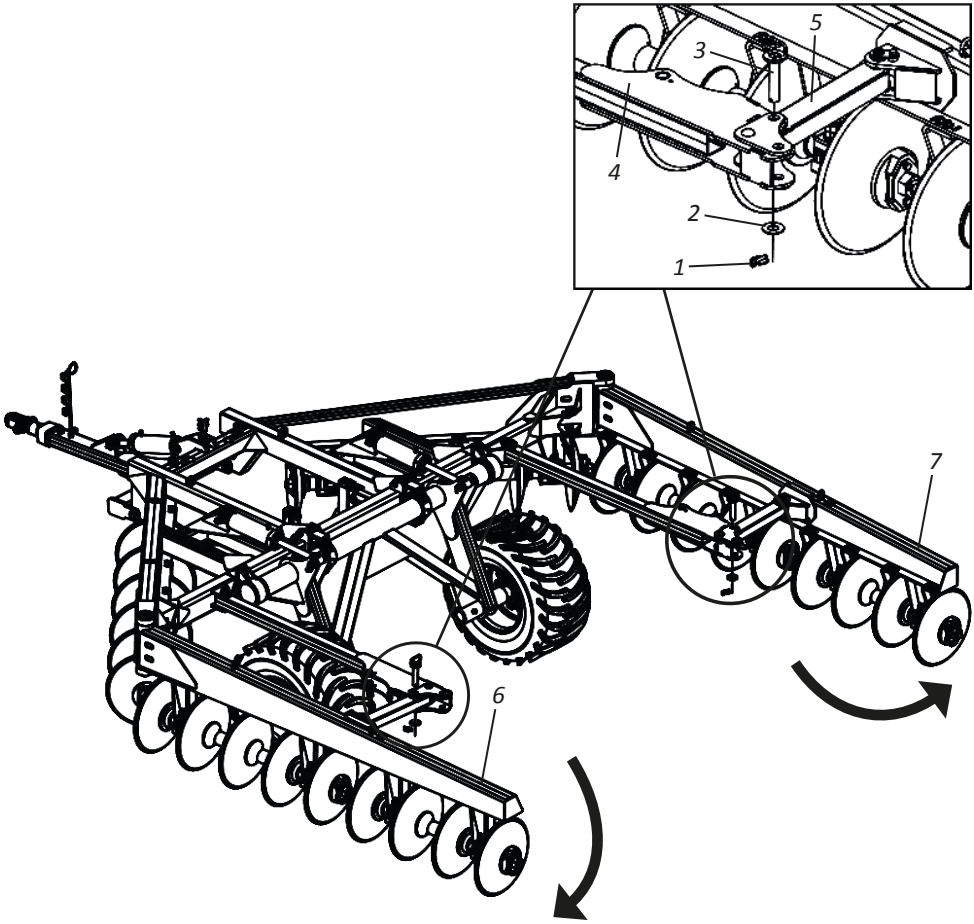

▪ Adjustment

• Working procedure (Manual Opening) - Part II

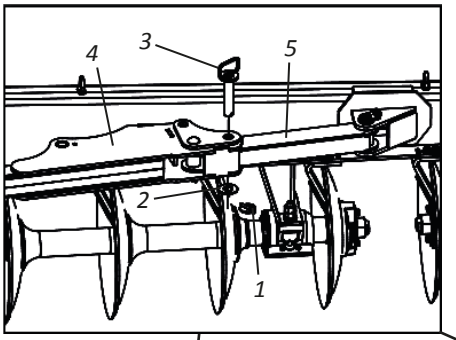

03 - Then replace the pins (3), flat washers (2) and ring locks (1) to lock the articulation beams (5) on the articulation supports (4).

04 - Then engage the hydraulic cylinders (8) to fully lower the **TACR**.

05 - Finish by driving the hydraulic cylinder (9) of the coupling head to level the **TACR** for work.

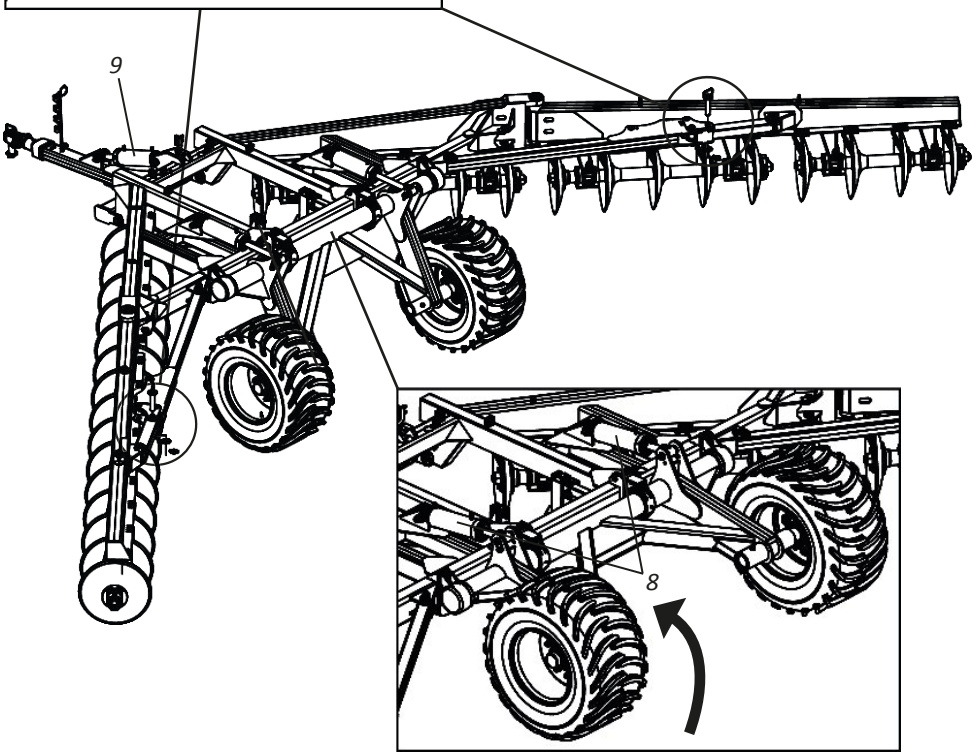

⚠ ATTENTION

DO NOT start work with the TACR without first locking the articulation beams (5) in the articulation supports (4) through the pins (3), flat washers (2) and ring locks (1).

▪ Adjustment

• Adjustment of the leveling support

To adjust the leveling support, proceed as follows:

01 - Remove the ring locks (1), flat washers (2) and pins (3).
02 - Then move the leveling support (4) into the center frame adjusments (5) by adjustment the leveling support (4) according to your work need.
03 - Then replace the pins (3), flat washers (2) and ring locks (1).

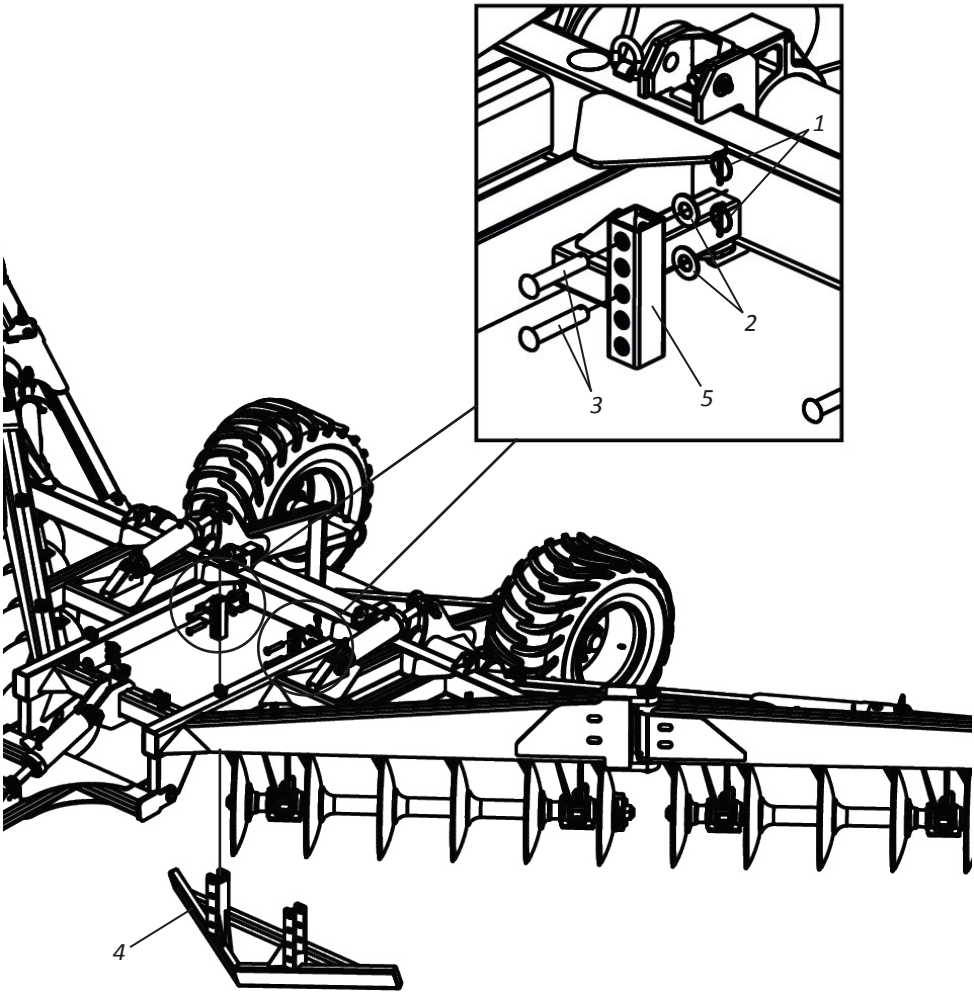

▪ Operations

• Recommendations for operation - Part I

Preparing the **TACR** and the tractor will save you time and provide better results in field work. The following suggestions may be useful for you.

TERRACING PLOUGH STRUCTURE

After the first day of work with the **TACR,** retighten all bolts, nuts, and check the conditions of pins and locks in the terracing plough structure. Then perform a general tightening on all bolts and nuts of the terracing plough structure every 24 hours.

DISCS SECTIONS

Special attention should be given to the discs sections of the **TACR.** Retighten all screws and nuts of the discs sections everyday during the first week of use. The retighten all screws and nuts of the discs sections periodically.

GENERAL RECOMMENDATION

01 - Adjust the tractor according to the content of the instruction manual, always using front and rear weights to stabilize the equipament.
02 - Always connect to the tractor in low gear and very carefully.
03 - Before working with the **TACR** it is important to check its coupling system, perform a full overhaul, retighten nuts and bolts, and check the locking of pins and cotter pins.
04 - After hitching, the next adjustments will be made directly in the field of work, analyzing the terrain for texture, humidity, and types of operations to be performed with the **TACR**.
05 - On the tractor, choose a gear that allows to save some power, guaranteeing against unforeseen efforts.
06 - Observe the working and transport speeds specified on page 10. We do not recommend exceeding speeds to maintain service efficiency and avoid damage to the **TACR**.
07 - Do not disconnect any hose without first relieving the circuit pressure by turning the control levers a couple of times with the engine off.
08 - Remove pieces of wood or any other object that may be attached to the discs.
09 - In compacted terrains where disc penetration is difficult, depth can be minimal, making work unsatisfactory. In these cases, the application of other more suitable products is recommended.

▪ Operations

• Recommendations for operation - Part II

10 - During work or transport, the drawbar of the tractor must remain fixed.

11 - When performing any maintenance on th **TACR**, lower it to the ground and turn off the engine.

12 - The **TACR** has several settings, but only local conditions can determine the best setting.

If in doubt, never operate or handle the TACR, contact After Sales.
Telephone: 0800-152577 / E-mail: posvenda@baldan.com.br

• Terrace construction

The soil must not be so moist that it does not allow plowing or harrowing operations that can be performed by the **TACR**.

The soil with the ideal humidity favors earth flow, facilitating the information of the terrace.

The ideal moisture is characterized by the information of a clod that cracks after being dropped without crumbling. Under these conditions, the best performance is obtained with the implement, as the soil will not adhere to the discs, will flow to the center of the terrace more easily requiring less traction effort.

Terraces made on compacted soils are also possible as long as additional measures are put in place such as:

- Subsoiling with a depth between 40 and 50 cm in the strip intended for the terrace, in a width of 10 m.

- Grade the subsoil strip in order to promote clod breaking.

Such measures ensure better performance of your **TACR**, while preserving it against abnormal stresses while working.

After the terrace is finished, a subsoiling on its upper edge is desirable for better water absorption, regardless of soil type.

If your terrain is heavily overgrouwn, you should grade the terraced strips to prevent the **TACR** discs from getting clogged.

▪ Operations

• Terrain slope

Slopes in certain crops of the year range from zero to 10% in most cases. Through these slopes land can be efficiently protected against water erosion if terraced.

This efficency increases, if, rather than simple narrow terraces, by building wide base terraces and with lateral terrain slopes completely used by the crops.

Distances between terraces vary terraces vary according to the type of soil (clay or sand) and slope.

• Number of passes

During work, the number of passes varies according to terrain topography, tractor soil type, and desired height terrace.

• Terrace finishing

Terrace finishing is the elimination of the grooves left by the last discs, which must be done with subsoilers or disc plows where those further increase the base width.

The advantage of using subsoilers in terrace finishing is the infiltration of a position of the water before it reaches the terraces, reducing the risk of rupture.

Motor graders, wheel loaders, and crawler tractors are applied for final finishing of terraces.

▪ Operations

• TACR Operations - Part I

Before starting terrace construction, make sure that the terrain has not yet been graded.

If not, two passes should be made with the **TACR** in the working position, with the discs fully grounded as shown below.

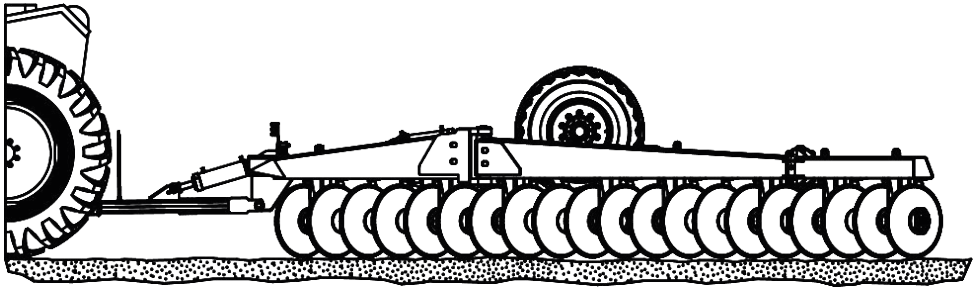

To begin construction of the terrace, steps must be counted from this moment on.

Start the first passes with a slightly activated hydraulic cylinder (1), leaving the first discs above ground as shown below.

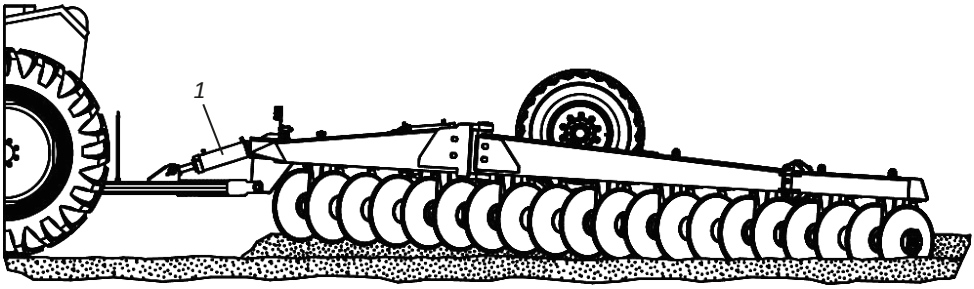

After the 3rd or 4th pass, the hydraulic cylinder (1) must be pressed further, causing all the discs to touch the ground, as shown in the figure below.

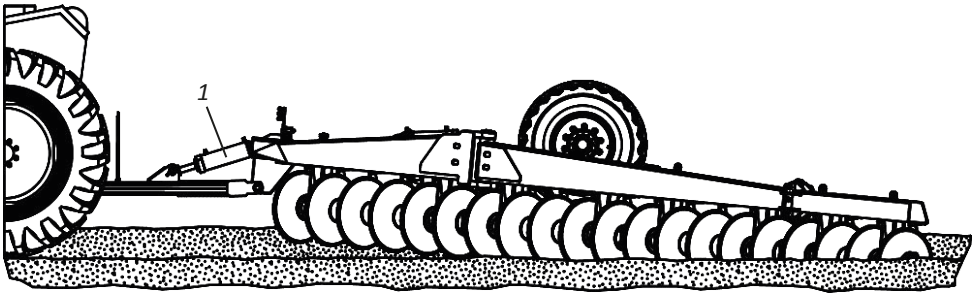

▪ Operations

• TACR Operations - Part II

In the other passes, the hydraulic cylinder (1) should be gradually activated until the terracing is completed, as shown in the figure below.

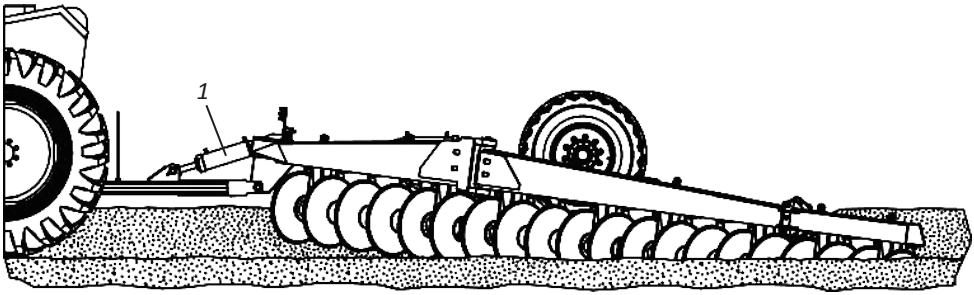

Tractor speed for this work is determined according to work site conditions.

⚠ ATTENTION | **Controlling depth by opening the disc sections and only using the tires where the TACR penetrates excessively is recommended.**

▪ Maintenance

The **TACR** has been developed to provide you with the maximum yield on land conditions. Experience has shown that periodic maintenance of certain parts of **TACR** is the best way to help you avoid problems, so we suggest checks.

• Tire pressure

The tires should always be properly calibrated avoiding early wear due to excess or lack of pressure.

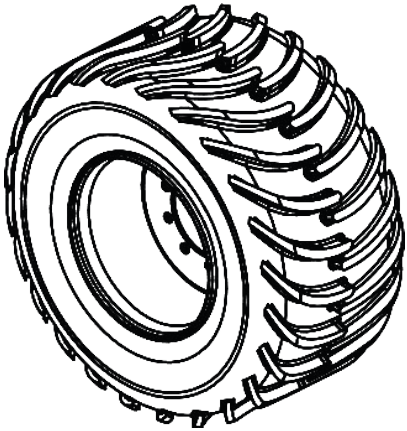

TIRES 600/50 22,5 TL
USE: 40 LBS/POL²

⚠ ATTENTION

Never weld the wheel mounted with tire, the heat may cause air pressure increase and provoke the explosion of the tire.
When filling the tire, position yourself besides the tire, never in front of it.
To fill the tire, always use containment device (armor cage).
Assemble the tires with proper equipment. The service should only be performed by people qualified to do the work.

! IMPORTANT

When calibrating tires, do not exceed the recommended calibration.

NOTE

The pressure of the tractor tires should be performed according to the manufaturer's recommendation.

▪ Maintenance

ATTENTION **Check nuts and bolts, retighten them if necessary. The maintenance of general re-installation of the equipment must be performed every 8 hours of work.**

• Lubrification

Lubrification is essential for the good performance and durability of the **TACR**'s moving parts, saving maintenance costs.

Before starting the operation, carefully lubrificate all grease cups, always observing the lubrification intervals in the followings pages. Make sure of the lubrificant quality regarding its efficiency and purity, avoiding products contaminated by water, dust and other agents.

• Table of greases and equivalents

Manufacturer	Types of grease recommended
Petrobrás	Lubrax GMA-2
Atlantic	Litholine MP 2
Ipiranga	Ipiflex 2
Castrol	LM 2
Mobil	Grease MP
Texaco	Marfak 2
Shell	Alvania EP 2
Esso	Multi H
Bardahl	Maxlub APG-2EP
Valvoline	Palladium MP-2
Petronas	Tutela Jota MP 2 EP
	Tutela Alfa 2K
	Tutela KP 2K

ATTENTION **If there are equivalent manufacturers and/or brands tha are not listed in the table, consult the manufacturer's technical manual.**

▪ Maintenance

- **Lubricate every 24 hours of work - Part I**

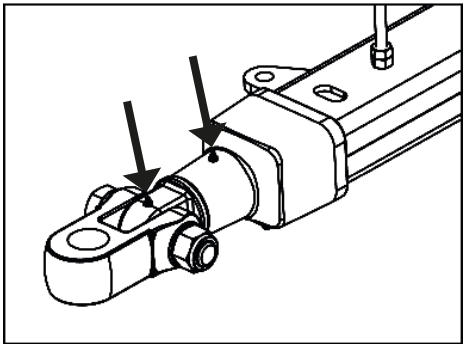
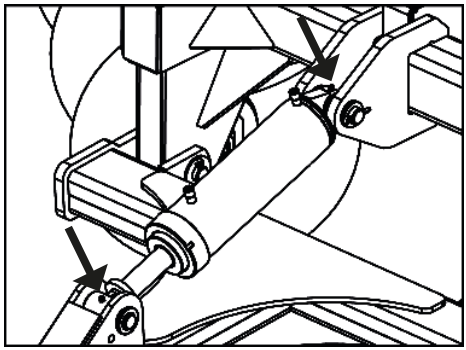
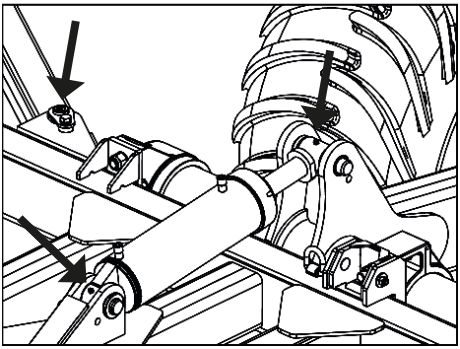
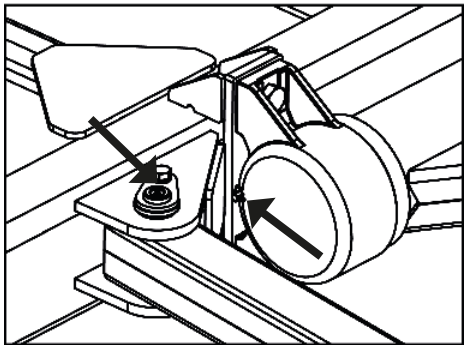
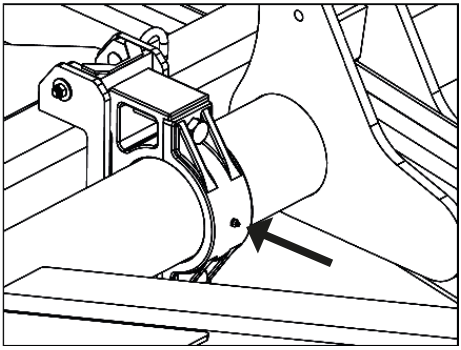
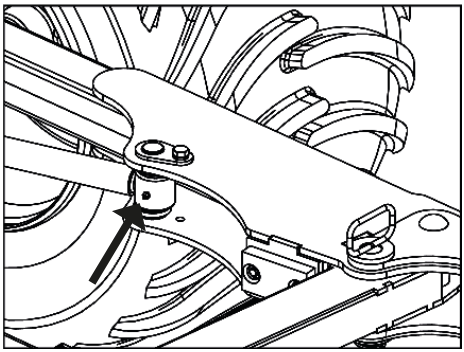

⚠ ATTENTION | **When lubricating the TACR, do not exceed the amount of new grease. Put an adequate amount.**

▪ Maintenance

- Lubricate every 24 hours of work - Part II

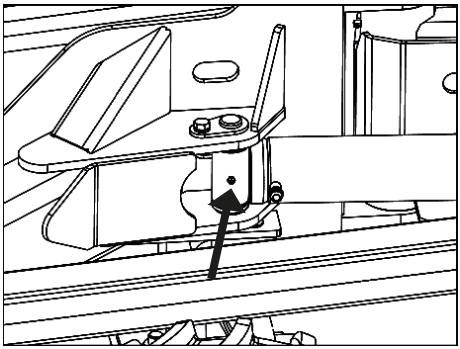

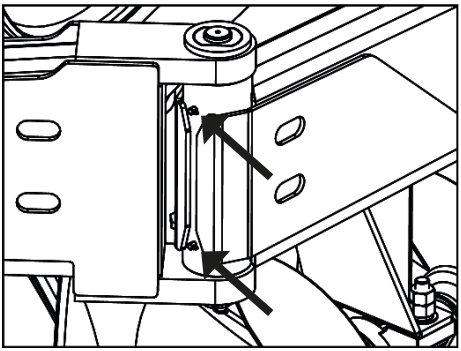

ATTENTION When lubricating the TACR, do not exceed the amount of new grease. Put an adequate amount.

▪ Maintenance

• Lubricate of grease bearings

Grease-bearings must be lubrificated every 12 hours of work. Use **EP** grease **(DIN51825 KP00K Consistency NLGI 2/3 Specification).**

The amount of grease in each bearing is **0,500 kg**.

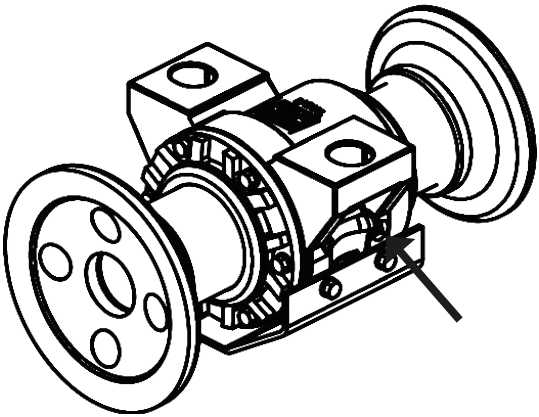

⚠ ATTENTION

Before lubrificating the bearing, wipe the grease with a clean, lint-free cloth. Replace damaged grease fittings.

• Lubrification of oil bearings

On the first days of work with the **TACR**, check the bearing oil level daily, then check every 120 hours of work.

Oil change should be done every 1200 hours of work. Use transmission **90 API GL4, MIL-L-2105; SAEJ306, may/81: SAE 80W,90 and 140.**

The amount of oil in each bearings is **0,320 liters**.

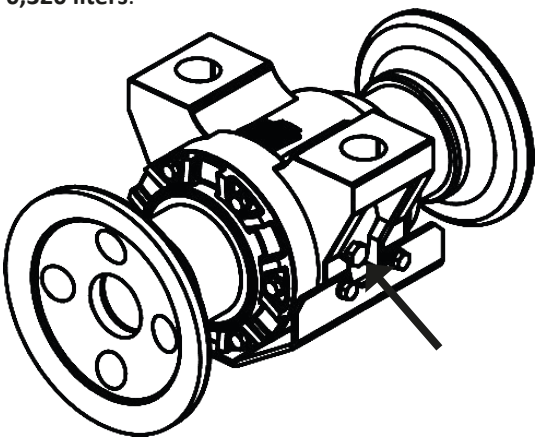

⚠ ATTENTION

The ideal oil level is when it reaches the plug hole. To check the bearing oil level, search for a plain place.

Maintenance

• Operational Maintenance

PROBLEMS	PROBABLE CAUSES	SOLUTIONS
The tires are damaged.	Work area with rocks, stubs or remaining of culture with stems that spike the tire.	Eliminate elements that cause damage to the tires before using the TACR.
	Tires are not with proper pressure, generating deformations.	Maintain proper tires pressure.
Weird noise on the wheels.	Loosen or play in wheel hub.	Retighten the wheel nuts and adjust wheel hub bearings.
	Breaking of bearings.	Identify the occurence and replace damaged parts.
Quick coupling does not fit.	Couplings of different types.	Change them for males and females of the same type.
Leakage in hydraulic hose.	Lack of sealing material on the thread.	Use sealing tape and retighten carefully.
	Insufficient tightening.	Retighten carefully.
	Damaged repairs.	Replace hubs.
Leakage in quick couplings.	Insufficient tightening.	Retighten carefully without excess.
	Damaged repairs.	Replace hubs.
Quick coupling does not connect.	Couplings of different brands.	Use quick coupling of the same brand.
	Mixing of needle-type coupling with sphere-type coupling.	Always use quick coupling of the same type.
	Pressure on the system.	Relief the pressure to connect.

▪ Maintenance

• Cares

01 - Before each work, check the condition of all hoses, pins, screws, bearings, discs, and sections. Where necessary, retighten or replace them.

02 - Travel speed should be carefully controlled according to terrain conditions.

03 - The **TACR** is used in several applications, requiring knowledge and attention when handling it.

04 - Only local conditions can determine the best way to operate the **TACR**.

05 - When assembling or disassembling parts of the **TACR**, use appropriate methods and tools.

06 - Carefully observe the lubrification intervals at the multiple lubrification points of the **TACR**. Respect lubrification intervals.

07 - Always check if the parts have wears. If there is a need for replacement, **always demand Baldan original parts**.

08 - Keep the **TACR** discs always sharp.

! IMPORTANT | **Proper and periodic maintenance are necessary to ensure a long useful life of the TACR.**

▪ Maintenance

• General Cleaning

01 - When storing the **TACR**, perform a general cleaning and wash it thoroughly water only. Make sure the paint is not worn, if so, apply a general coat and protective oil and fully lubrificate the **TACR**. Do not use burnt oil or other abrasive materials.

02 - Fully lubrificate the **TACR**. Check all moving parts of the **TACR** for wear and gaps and make the required adjusments or part replacements, leaving the terracing plough ready for the next work.

03 - After all maintenance work, store the terracing plough in a covered and dry place, with proper support.

Avoid: - That the discs come into direct contact with the ground.
- Hydraulic hoses should be properly capped.

04 - When connecting or disconnecting hydraulic hoses, do not let the terminals touch the ground. Before connecting hydraulic hoses, wipe the connections with a clean, lint-free cloth. **Do not use tow!**

05 - Replace all adhesives, especially those about warnings, that are damaged or missing. Make everyone aware of the importance and risks of accidents when instructions are not followed.

06 - After all maintenance precautions, store your **TACR** on a plain surface, at a covered and dry location, away from animals and children.

07 - We recommend washing the **TACR** with only water before work.

⚠ ATTENTION | **Do not use chemicals to wash the TACR as this may damage the paint.**

• Conservation of the terracing plough - Part I

To extend the useful life and appearance of the **TACR**, follow the instructions below:

01 - Wash and clean all **TACR** components during and at the end of the work season.

02 - Use neutral products to clean the **TACR**, following the safety and handling guidelines provided by the manufacturer.

03 - Always perform maintenance in the periods indicated in this manual.

• Conservation of the terracing plough - Part II

The practices and care below make a difference for the conservation of the **TACR** if adopted by the owner or operator.

▪ Maintenance

01 - Be careful when performing high-pressure washing;
02 - Only use NEUTRAL detergent and water (pH equal to 7);
03 - Apply the product, following the manufacturer's instructions strictly, on the wet surface and in the correct sequence, respecting the time of application and washing;
04 - Stains and dirt not removed with the products should be removed with the aid of a sponge.
05 - Rinse the machine with clean water to remove all chemical residues.
06 - Do not use: - Detergents with a basic active ingredient (pH higher than 7) may damage/ stain the the terracing plough paint.
- Detergents with acid active ingredient (pH less than 7), act as stripper/remover of zinc coating (the protection of parts against oxidation).

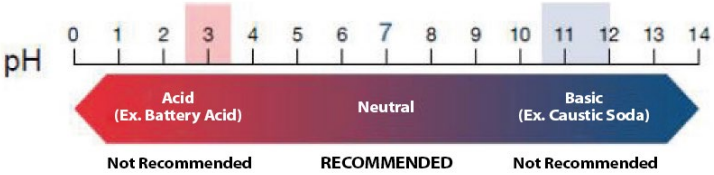

07 - Let the machine dry in the shade so that it does not accumulate water in its components. Very fast drying can cause stains on your paint.
08 - After drying, lubrificate all chains and greases according to the recommendations in the operator's manual.
09 - Spray the whole machine, especially its zinc parts, with protective oil, following the manufaturer's application guidelines. The protective also prevents dirt from adhering to the machine, facilitating subsequent washings.
10 - Observe curing (absorption) time and application intervals as recommended by the manufacturer.

⚠ ATTENTION | **Do not use any other type of oil to protect the scarifier (used hydraulic oil, diesel oil, castor oil, kerosene, etc.).**

IMPORTANT | **We recommend the following protective oils:**
- Bardahl: Agro protective 200 or 300
- ITWChemical: Zoxol DW - Series 4000

NOTE | **Ignoring the conservation measures mentioned above may result in loss or warranty for painted or zinc-coated components which may suffer oxidation (rust).**

▪ Lifting

• Lifting points

The **TACR** has “A” lifting points located on the center frame and side frames identified by the adhesive (1) attached to the side of these points. When assembling, loading, unloading or servicing the **TACR**, the lifting should be done in separate modules, and it is essential to engage the chains at the lifting points “A”.

Model	Nr of Discs	Lifting points
TACR	24 / 30 / 34	8 points
	40	12 points

“A”

MAXIMUM LOAD: 1000 KG

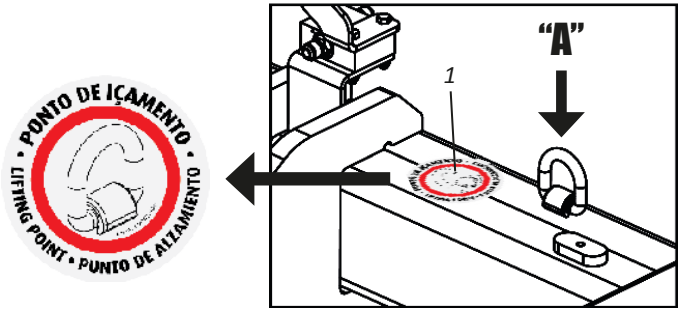

▪ Optional

• Optional Accessories

The **TACR-A** can be optionally purchased with:

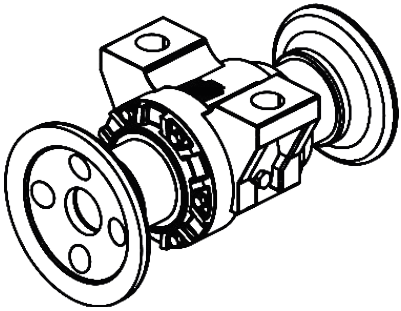

AXIAL BEARING WITHOUT GUARD

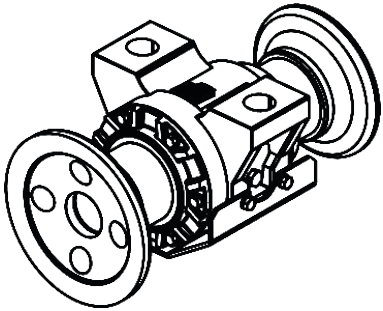

AXIAL BEARING WITH GUARD

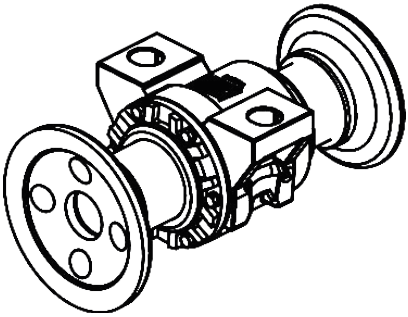

GREASE BEARING WITHOUT GUARD

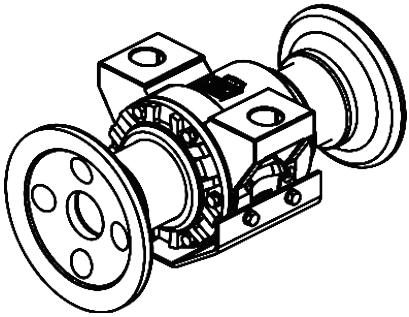

GREASE BEARING WITH GUARD

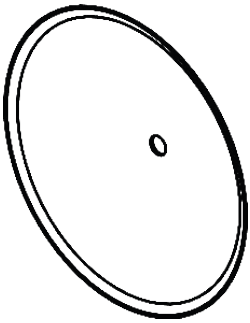

FLAT DISC

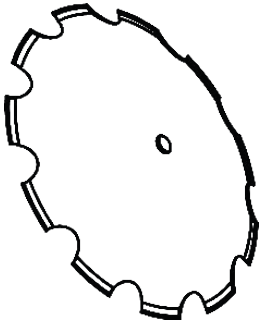

TRIMMED DISC

▪ Identification

• Identification plate

In order to consult the parts catalog or ask Baldan for service, always indicate the model (1), serial number (2) and manufacturing date (3), which is on the nameplate of your **TACR**.

⚠ ATTENTION

The drawings in this Instruction Manual are merely illustrative.

CONTACT

In case of doubts, never operate or handle your equipment without contacting Post-Sales.
Telephone: 0800-152577
e-mail: posvenda@baldan.com.br

PUBLICATIONS

Code: 60550108685 | CPT: TACRF02919

▪ Identification

• Product identification

Please make the correct identification of the data below, to always have information about the service life of your equipment.

Owner: _____

Dealer: _____

Property: _____

City: _____

State: _____

Certificate of Warranty no.: _____

Implement: _____

Serial No: _____

Purchase Date: _____

Invoice: _____

▪ Notes

▪ Notes

Certificate of Warranty

BALDAN IMPLEMENTOS AGRÍCOLAS S/A ensures the dealer normal performance of the implement for a period of six (6) months as of the delivery date on the retail invoice to the first final consumer. During this period, **BALDAN** undertakes to repair defects in material and/or of manufacture of its liability, including labor, freight and other expenses of the dealer's liability.

In the warranty period, request and replacement of eventual defective parts shall be made to the dealer of the area, who will submit the faulty piece for **BALDAN** analysis. When this procedure is not possible and the resolving capacity of the dealer is exhausted, the dealer will request the support of **BALDAN Technical Assistance** through a specific form distributed to dealers. After analyzing the replaced items by Baldan Technical Assistance, and concluding that it is not a warranty, then the dealer will be responsible for the costs related to the replacement; as well as material expenses, travel including accommodation and meals, accessories, lubricant used and other expenses arising from the call out to Technical Assistance, and Baldan company is authorized to carry the respective invoice in the name of the resale. Any repair carried in the product within the dealer warranty deadline will only be authorized by **BALDAN** upon previous budget presentation describing parts and work to be performed.

The product is excluded from this term if it is repaired or modified by representatives not belonging to the **BALDAN** dealer network, as well as the application of non-genuine parts or components to the user's product. This warranty is void where it is found that the defect or damage is caused by improper use of the product, failure to follow instructions or inexperience of the operator.

It is agreed that this warranty does not cover tires, polyethylene tanks, cardan, hydraulic components, etc., which are equipment guaranteed by their manufacturers. Manufacturing and/or material defects, object of this warranty term, will not constitute, under any circumstances, grounds for termination of a purchase agreement, or for indemnification of any nature.

BALDAN reserves the right to change and/or perfect the technical characteristics of its products, without previous notice, and without obligation to proceed in the same way with the products previously manufactured.

▪ Inspection and Delivery Certificate

SERVICE BEFORE DELIVERY: This implement was carefully prepared by the sale organization, with all its parts inspected according to the manufacturing prescriptions.

DELIVERY SERVICE: The user was informed about the current warranty terms and instructed on the usage maintenance precautions.

I confirm that the user has been informed about the current warranty terms and instructed on the usage maintenance precautions.

Implement: _____ Serial Number: _____

Date: _____ Tax Number: _____

Dealer: _____

Telephone: _____ CEP: _____

City: _____ State: _____

Owner: _____

Telephone: _____

Address: _____ Number: _____

City: _____ State: _____

E-mail: _____

Sale date: _____

Signature / Dealer Stamp _____

1st copy - Owner

▪ Inspection and Delivery Certificate

SERVICE BEFORE DELIVERY: This implement was carefully prepared by the sale organization, with all its parts inspected according to the manufacturing prescriptions.

DELIVERY SERVICE: The user was informed about the current warranty terms and instructed on the usage maintenance precautions.

I confirm that the user has been informed about the current warranty terms and instructed on the usage maintenance precautions.

Implement: _____ Serial Number: _____

Date: _____ Tax Number: _____

Dealer: _____

Telephone: _____ CEP: _____

City: _____ State: _____

Owner: _____

Telephone: _____

Address: _____ Number: _____

City: _____ State: _____

E-mail: _____

Sale date: _____

Signature / Dealer Stamp _____

2nd copy - Dealer

▪ Inspection and Delivery Certificate

SERVICE BEFORE DELIVERY: This implement was carefully prepared by the sale organization, with all its parts inspected according to the manufacturing prescriptions.

DELIVERY SERVICE: The user was informed about the current warranty terms and instructed on the usage maintenance precautions.

I confirm that the user has been informed about the current warranty terms and instructed on the usage maintenance precautions.

Implement: _____ Serial Number: _____

Date: _____ Tax Number: _____

Dealer: _____

Telephone: _____ CEP: _____

City: _____ State: _____

Owner: _____

Telephone: _____

Address: _____ Number: _____

City: _____ State: _____

E-mail: _____

Sale date: _____

Signature / Dealer Stamp _____

3rd copy - Manufacturer (Please send completed within 15 days).

1.74.05.0059-5

AC MATÃO
ECT/DR/SP

RESPONSE CARD

NO STAMPING IS REQUIRED

THE STAMP WILL BE PAID BY:

BALDAN IMPLEMENTOS AGRÍCOLAS S/A.
Av. Baldan, 1500 | Nova Matão | CEP: 15993-900 | Matão-SP. | Brasil
Tel: (16) 3221-6500 | Fax: (16) 3382-6500
www.baldan.com.br | email: sac@baldan.com.br
Export: Tel: +55 (16) 3221-6500 | Fax: +55 (16) 3382-4212 | 3382-2480
email: export@baldan.com.br

BALDAN

Avenida Baldan, 1500
Nova Matão
15.993-900
Matão/SP - Brasil
sac@baldan.com.br
export@baldan.com.br

+55 16 3221 6500
baldan.com.br