Parts Catalog

AF / AFL

Mounted Disc Plough / Mounted Disc Plough (Light)

BIA® Baldan

Index

INDEX **3**
AF *4*
AFL *5*
Frame AF *6*
Frame AF of 3 Discs (Optional) *6*
Front Support (Grease-Oil) *7*
Plow Socket Rear Support *7*
Disc Hub (Grease) *7*
Disc Hub (Oil) *8*
Fixed Scraper *8*
Oscilating Scraper *8*
Complete Guide Wheel *9*
Guide Wheel Complete Support *9*
Depth Wheel w/ Handle *10*
Depth Wheel+Hub *10*
Complete Support *10*
Stickers *11*
NUMERICAL INDEX **12**

• AF

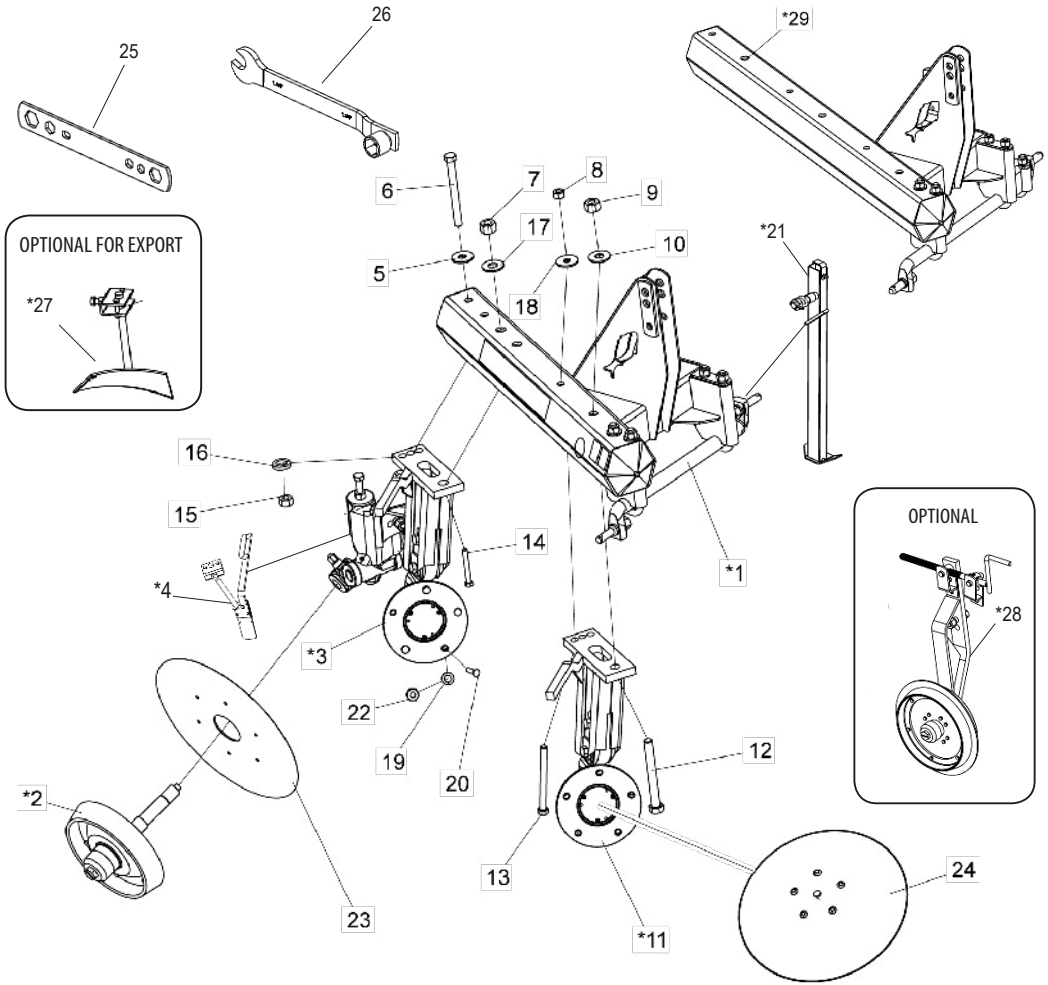

* Items 1 and 29 - See page 6
* Item 2 - See page 9
* Items 3 and 11 - See page 7
* Items 4 and 27 - See page 8
* Items 21 and 28 - See page 10

Item	Code	Product Description	All	AF 02 Discs	AF 03 Discs	AF 04 Discs	AF 05 Discs
*1	5022010013-5	Complete Frame Af/Afr 02 Discs		1			
*1	5022010014-3	Complete Frame Af 3-Dics			1		
*1	5022010015-1	Complete Frame Af-4 Discs				1	
*1	5022010016-0	Complete Frame Af-5 Discs					1
*2	5498010015-7	Complete Guide Wheel	1				
*3	5530050013-6	Complete Rear Support		1	1	1	1
*3	5530050011-0	Complete Rear Support		1	1	1	1
*4	5352010040-3	Complete Oscilating Scraper		2	3	4	5
5	5024010091-3	Smooth Washer Ø23,5 X Ø66,5 X 4,75Mm		1	1	1	5
6	6020311121-8	Hexagonal Head Bolt 7/8" X 9" 9F Unc1A Gr5 Rp (Bichromated)		1	1	1	5
7	6020310788-1	Hexagonal Nut 1.1/8" 7F Unc Gr5 Ch.1.3/4" Alt.28,50Mm (Bichromated)		1	1	1	5
8	6020310770-9	Hexagonal Nut 3/4" 10F Unc Gr5 Ch.1.7/32" Alt.18,50Mm (Bichromated)		1	2	3	
9	6020310778-4	Hexagonal Nut 1" 8F Unc Gr5 Ch.1.5/8" Alt.25,00Mm (Bichromated)		1	2	3	
10	5024010012-3	Smooth Washer Ø26,8 X Ø66,5 X 4,75Mm		1	2	3	
*11	5530050012-8	Complete Front Support		1	2	3	
*11	5530050010-1	Complete Front Support		1	2	3	
*11	5530050014-4	Complete Front Support					4
*11	5530050009-8	Complete Front Support					4
12	6020311143-9	Hexagonal Head Bolt 1" X 9" 8F Unc1A Gr5 Rp (Bichromated)		1	2	3	
13	6020311110-2	Hexagonal Head Bolt 3/4" X 9" 10F Unc1A Gr5 Rp (Bichromated)		1	2	3	
14	6020311150-1	Hexagonal Head Bolt 1.1/8" X 9" 7F Unc1A Gr5 Rp Usin (Bichromated)		1	1	1	5
15	6020310774-1	Hexagonal Nut 7/8" 9F Unc Gr5 Ch.1.7/16" Alt.22,00Mm (Bichromated)		1	1	1	5
16	6020010418-0	Pressure Washer 7/8" Media Industry (Bichromated)	1				
17	5024010087-5	Smooth Washer Ø30 X Ø66,5 X 4,75Mm		1	1	1	5
18	5024010076-0	Smooth Washer Ø20,5 X Ø66,5 X 4,75Mm		1	2	3	
19	6020010410-5	Pressure Washer 1/2" Media Industry (Bichromated)		10	15	20	25
20	6020310234-0	Plow Screw Type A3 1/2" X 2" 12F Gr2 Rp (Bichromated)		10	15	20	25
*21	5530030001-3	Complete Support	1				
22	6020310754-7	Hexagonal Nut 1/2" 12F W Gr5 Ch.7/8" Alt.12,00Mm (Bichromated)		10	15	20	25
23	2863407224-3	Coulter Plain Disc Blade 20 X 4,50 Hc Rd 104Mm + 6H Rd 11Mm R=132,5Mm Single Bevel	1				
23	2865407224-0	Coulter Plain Disc Blade 22 X 4,50 Hc Rd 104Mm + 6H Rd 11Mm R=132,5Mm Single Bevel	1				
24	2669426523-4	Concave Plain Disc Blade 26 X 5,00 Hc Rd 1.116 + 5H Sq Countersunk 14Mm R=104Mm Single Bevel		2	3	4	5
24	2769426523-0	Concave Notched Disc Blade 26 X 5,00 Hc Rd 1.116 + 5H Sq Countersunk 14Mm R=104Mm Single Bevel		2	3	4	5
24	2669436523-9	Concave Plain Disc Blade 26 X 6,00 Hc Rd 1.116 + 5H Sq Countersunk 14Mm R=104Mm Single Bevel		2	3	4	5
24	2669436533-6	Concave Plain Disc Blade 26 X 6,00 Hc Rd 1.116 + 5H Sq Countersunk 14Mm R=104Mm Internal Bevel		2	3	4	5
24	2769436523-5	Concave Notched Disc Blade 26 X 6,00 Hc Rd 1.116 + 5H Sq Countersunk 14Mm R=104Mm Single Bevel		2	3	4	5
24	2670436523-2	Concave Plain Disc Blade 28 X 6,00 Hc Rd 1.116 + 5H Sq Countersunk 14Mm R=104Mm Single Bevel		2	3	4	5
24	2670436533-0	Concave Plain Disc Blade 28 X 6,00 Hc Rd 1.116 + 5H Sq Countersunk 14Mm R=104Mm Internal Bevel		2	3	4	5
24	2770436523-9	Concave Notched Disc Blade 28 X 6,00 Hc Rd 1.116 + 5H Sq Countersunk 14Mm R=104Mm Single Bevel		2	3	4	5
24	2670476523-0	Concave Plain Disc Blade 28 X 7,50 Hc Rd 1.116 + 5H Sq Countersunk 14Mm R=104Mm Single Bevel		2	3	4	5
24	2770476523-7	Concave Notched Disc Blade 28 X 7,50 Hc Rd 1.116 + 5H Sq Countersunk 14Mm R=104Mm Single Bevel		2	3	4	5
24	2671436523-0	Concave Plain Disc Blade 30 X 6,00 Hc Rd 1.116 + 5H Sq Countersunk 14Mm R=104Mm Single Bevel		2	3	4	5
24	2771436523-7	Concave Notched Disc Blade 30 X 6,00 Hc Rd 1.116 + 5H Sq Countersunk 14Mm R=104Mm Single Bevel		2	3	4	5
24	2671476523-9	Concave Plain Disc Blade 30 X 7,50 Hc Rd 1.116 + 5H Sq Countersunk 14Mm R=104Mm Single Bevel		2	3	4	5
25	5138030001-3	Wrench For Hexagonal Nut 5/8" - 3/4" - 7/8" - 1" - 1.1/8"	1				
26	5138010002-2	Wrench For Hexagonal Nut 3/4"	1				
		OPTIONAL					
*27	5352010039-0	Complete Fixed Scraper (For Export)		2	3	4	5
*28	5498010110-2	Depth Wheel With Crank	1				
*29	5022010842-0	Complete Gang Af-03 Discs(Special)			1		

• AFL

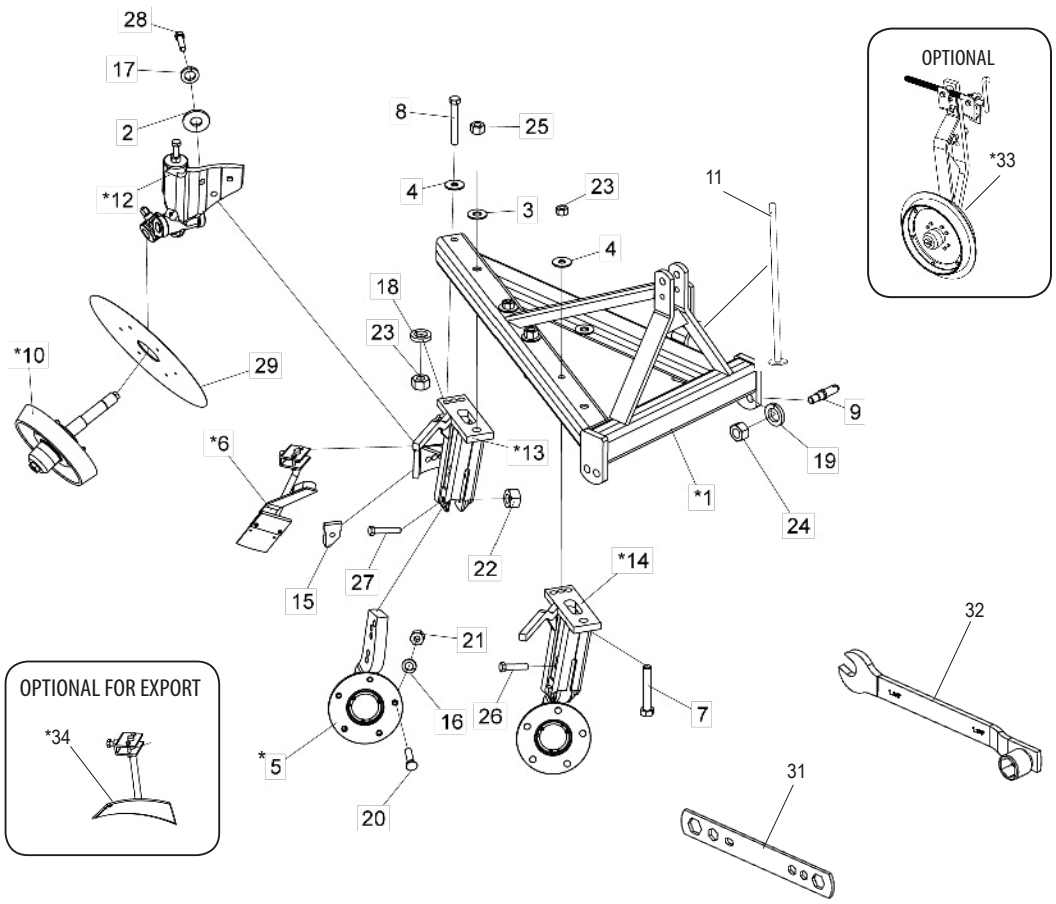

Item	Code	Product Description	All	AFL 03 Discs	AFL 04 Discs	AFL 05 Discs
1	5022010775-0	Frame Aflb-05 Discs				1
1	5022010808-0	Frame Aflb-04 Discs			1	
1	5022010809-8	Frame Aflb-03 Discs		1		
2	5024010007-7	Smooth Washer Ø20,3 X Ø46,5 X 4,75Mm	2			
3	5024010087-5	Smooth Washer Ø30 X Ø66,5 X 4,75Mm		3	4	5
4	5024010091-3	Smooth Washer Ø23,5 X Ø66,5 X 4,75Mm		3	4	5
*5	5204020001-0	Complete Disc Hub Grease		3	4	5
*6	5352010040-3	Complete Oscilating Scraper		3	4	5
7	5420010061-4	Hexagonal Head Bolt 1.1/8" X 6.5/8" 7F Unc 1A Gr5 Rp (Chromate)		3	4	5
8	5420010062-2	Hexagonal Head Bolt 7/8" X 6.1/2" 9F Unc 1A Gr5 Rp (Bearing)		3	4	5
9	5432050010-1	Hitch Pin 3º Point 135Mm Category 3	2			
*10	5498010015-7	Complete Guide Wheel	1			
11	5530011171-7	Support	1			
*12	5530040001-8	Complete Support Of Guide Wheel	1			
*13	5530050001-2	Rear Support Cachimbo (Af 02/03/04/05)	1			
*14	5530050002-0	Socket Front Support		2	3	4
15	5558010001-4	Lock Of Kit Guide Wheel	1			
16	6020010410-5	Pressure Washer 1/2" Media Industry (Bichromated)		15	20	25
17	6020010414-8	Pressure Washer 3/4" Media Industry (Bichromated)		8	11	13
18	6020010418-0	Pressure Washer 7/8" Media Industry (Bichromated)	1			
19	6020010420-2	Pressure Washer 1" Media Industry (Bichromated)	2			
20	6020310234-0	Plow Screw Type A3 1/2" X 2" 12F Gr2 Rp (Bichromated)		15	20	25
21	6020310754-7	Hexagonal Nut 1/2" 12F W Gr5 Ch.7/8" Alt.12,00Mm (Bichromated)		15	20	25
22	6020310770-9	Hexagonal Nut 3/4" 10F Unc Gr5 Ch.1.7/32" Alt.18,50Mm (Bichromated)		7	10	12
23	6020310774-1	Hexagonal Nut 7/8" 9F Unc Gr5 Ch.1.7/16" Alt.22,00Mm (Bichromated)		3	4	5
24	6020310782-2	Hexagonal Nut 1" 12F Unf Gr5 Ch.1.1/2" Alt.22,50Mm (Bichromated)	2			
25	6020310788-1	Hexagonal Nut 1.1/8" 7F Unc Gr5 Ch.1.3/4" Alt.28,50Mm (Bichromated)		3	4	5
26	6020311098-0	Hexagonal Head Bolt 3/4" X 3.1/2" 10F Unc1A Gr5 Rp (Bichromated)		3	4	5
27	6020311099-8	Hexagonal Head Bolt 3/4" X 4" 10F Unc1A Gr5 Rp (Bichromated)		3	4	5
28	6020311115-3	Hexagonal Head Bolt 3/4" X 3" 10F Unc1A Gr5 Rt (Bichromated)		2	2	3
29	2863407224-3	Coulter Plain Disc Blade 20 X 4,50 Hc Rd 104Mm + 6H Rd 11Mm R=132,5Mm Single Bevel	1			
29	2865407224-0	Coulter Plain Disc Blade 22 X 4,50 Hc Rd 104Mm + 6H Rd 11Mm R=132,5Mm Single Bevel	1			
30	2669426523-4	Concave Plain Disc Blade 26 X 5,00 Hc Rd 1.116 + 5H Sq Countersunk 14Mm R=104Mm Single Bevel		3	4	5
30	2769426523-0	Concave Notched Disc Blade 26 X 5,00 Hc Rd 1.116 + 5H Sq Countersunk 14Mm R=104Mm Single Bevel		3	4	5
30	2669436523-9	Concave Plain Disc Blade 26 X 6,00 Hc Rd 1.116 + 5H Sq Countersunk 14Mm R=104Mm Single Bevel		3	4	5
30	2669436533-6	Concave Plain Disc Blade 26 X 6,00 Hc Rd 1.116 + 5H Sq Countersunk 14Mm R=104Mm Internal Bevel		3	4	5
30	2769436523-5	Concave Notched Disc Blade 26 X 6,00 Hc Rd 1.116 + 5H Sq Countersunk 14Mm R=104Mm Single Bevel		3	4	5
30	2670436523-2	Concave Plain Disc Blade 28 X 6,00 Hc Rd 1.116 + 5H Sq Countersunk 14Mm R=104Mm Single Bevel		3	4	5
30	2670436533-0	Concave Plain Disc Blade 28 X 6,00 Hc Rd 1.116 + 5H Sq Countersunk 14Mm R=104Mm Internal Bevel		3	4	5
30	2770436523-9	Concave Notched Disc Blade 28 X 6,00 Hc Rd 1.116 + 5H Sq Countersunk 14Mm R=104Mm Single Bevel		3	4	5
30	2670476523-0	Concave Plain Disc Blade 28 X 7,50 Hc Rd 1.116 + 5H Sq Countersunk 14Mm R=104Mm Single Bevel		3	4	5
30	2770476523-7	Concave Notched Disc Blade 28 X 7,50 Hc Rd 1.116 + 5H Sq Countersunk 14Mm R=104Mm Single Bevel		3	4	5
31	5138030001-3	Wrench For Hexagonal Nut 5/8" - 3/4" - 7/8" - 1" - 1.1/8"	1			
32	5138010005-7	Wrench For Hexagonal Nut 3/4" - 7/8"	1			
		OPTIONAL				
*33	5498010110-2	Depth Wheel With Crank	1			
*34	5352010039-0	Complete Fixed Scraper (For Export)		3	4	5

* Items 5, 13 e 14 - See page 7
* Items 6 and 34 - See page 8
* Items 10 and 12 - See page 9
* Item 33 - See page 10

• Frame AF

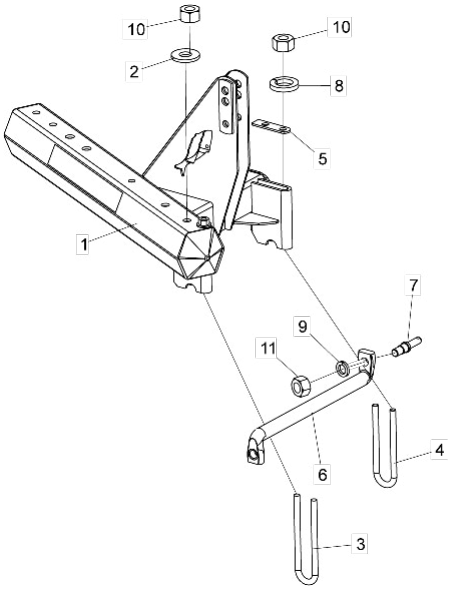

Item	Code	Product Description	All	AF 02 Discs	AF 03 Discs	AF 04 Discs	AF 05 Discs
1	5022010001-1	Frame Af-2 Discs		1			
1	5022010002-0	Frame Af-3 Discs			1		
1	5022010003-8	Frame Af-4 Discs				1	
1	5022010004-6	Frame Af-5 Discs					1
2	5024010007-7	Smooth Washer Ø20,3 X Ø46,5 X 4,75Mm		2	2		
3	5068010004-4	Clamp of 310mm		1	1		
3	5068010005-2	Clamp of 285mm				2	2
4	5068010054-0	Clamp of 280mm		1	1		
4	5068010056-7	Clamp of 72mm				2	2
5	5136020137-0	Clamp Plate		1		2	
6	5232010001-1	Hydraulic Hitch Axle		1			
6	5232010374-6	Hydraulic Hitch Axle			1		
6	5232010359-2	Hydraulic Hitch Axle				1	1
7	5432050009-8	Hitch Pin 3º Point 136Mm Category 2		2			
7	5432050010-1	Hitch Pin 3º Point 135Mm Category 3			2	2	2
8	6020010414-8	Pressure Washer 3/4" Media Industry (Bichromated)		2	2	8	8
9	6020010420-2	Pressure Washer 1" Media Industry (Bichromated)		2	2	2	2
10	6020310770-9	Hexagonal Nut 3/4" 10F Unc Gr5 Ch.1.7/32" Alt.18,50Mm (Bichromated)		4	4	8	8
11	6020310782-2	Hexagonal Nut 1" 12F Unf Gr5 Ch.1.1/2" Alt.22,50Mm (Bichromated)		2	2	2	
11	6020310778-4	Hexagonal Nut 1" 8F Unc Gr5 Ch.1.5/8" Alt.25,00Mm (Bichromated)					2

• Frame AF of 3 Discs (Optional)

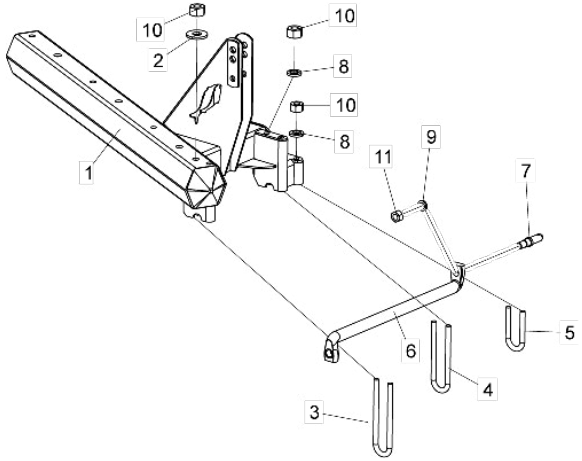

Item	Code	Product Description	All
1	5022010843-8	Frame Af-03 Discs(Special)	1
2	5024010007-7	Smooth Washer Ø20,3 X Ø46,5 X 4,75Mm	2
3	5068010004-4	Clamp	1
4	5068010054-0	Clamp	1
5	5068010056-7	Clamp	1
6	5232010374-6	Hydraulic Hitch Axle	1
7	5432050010-1	Hitch Pin 3º Point 135Mm Category 3	2
8	6020010414-8	Pressure Washer 3/4" Media Industry (Bichromated)	4
9	6020010420-2	Pressure Washer 1" Media Industry (Bichromated)	2
10	6020310770-9	Hexagonal Nut 3/4" 10F Unc Gr5 Ch.1.7/32" Alt.18,50Mm (Bichromated)	6
11	6020310782-2	Hexagonal Nut 1" 12F Unf Gr5 Ch.1.1/2" Alt.22,50Mm (Bichromated)	2

• Front Support (Grease-Oil)

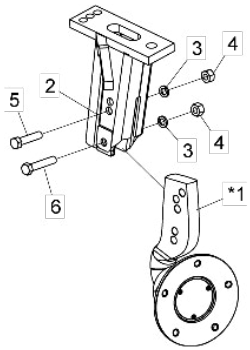

Item	Code	Product Description	All	AF 02 Discs	AF 03 Discs	AF 04 Discs	AF 05 Discs
1	5204020001-0	Complete Disc Hub Grease	1				
1	5204020004-5	Complete Disc Hub Oil	1				
2	5530050003-9	Socket Front Support		1	1	1	
2	5530050002-0	Socket Front Support					1
3	6020010414-8	Pressure Washer 3/4" Media Industry (Bichromated)	2				
4	6020310770-9	Hexagonal Nut 3/4" 10F Unc Gr5 Ch.1.7/32" Alt.18,50Mm (Bichromated)	2				
5	6020311098-0	Hexagonal Head Bolt 3/4" X 3.1/2" 10F Unc1A Gr5 Rp (Bichromated)	1				
6	6020311099-8	Hexagonal Head Bolt 3/4" X 4" 10F Unc1A Gr5 Rp (Bichromated)	1				

* Item 1 - See pages 7 and 8

• Plow Socket Rear Support

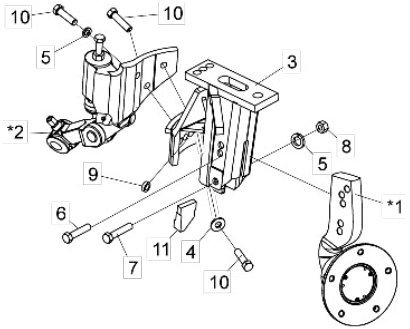

Item	Code	Product Description	All
1	5204020001-0	Complete Disc Hub Grease	1
1	5204020004-5	Complete Disc Hub Oil	1
2	5530040001-8	Complete Support Of Guide Wheel	1
3	5530050001-2	Rear Support Cachimbo (Af 02/03/04/05)	1
4	5024010007-7	Smooth Washer Ø20,3 X Ø46,5 X 4,75Mm	1
5	6020010414-8	Pressure Washer 3/4" Media Industry (Bichromated)	5
6	6020311098-0	Hexagonal Head Bolt 3/4" X 3.1/2" 10F Unc1A Gr5 Rp (Bichromated)	1
7	6020311099-8	Hexagonal Head Bolt 3/4" X 4" 10F Unc1A Gr5 Rp (Bichromated)	1
8	6020310770-9	Hexagonal Nut 3/4" 10F Unc Gr5 Ch.1.7/32" Alt.18,50Mm (Bichromated)	4
9	5080020114-1	Bushing Of Ø20 X Ø32 X 12Mm	1
10	6020311097-1	Hexagonal Head Bolt 3/4" X 3" 10F Unc1A Gr5 Rp (Bichromated)	3

* Item 1 - See page 7 and 8
* Item 2 - See page 9

• Disc Hub (Grease)

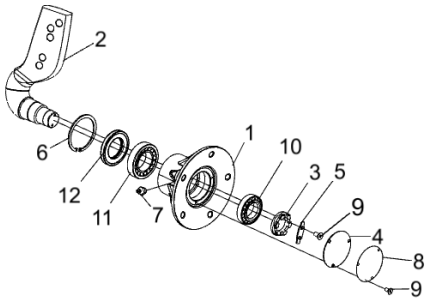

Item	Code	Product Description	All
1	5204020082-7	Disc Hub Grease	1
2	5232130001-4	Hub Axle	1
3	5456020007-5	Castle Nut Ø48,7 - 14 Fpp-W (Special)	1
4	5538010001-0	Greaser Hub Cover	1
5	5558020002-7	Lock Of Castle Nut (Small)	1
6	6020010285-4	Retention Ring I-110 G502-110-01	1
7	6020130108-7	Grease Fitting 1/8" Straight Bsp-28F	1
8	6020190118-1	Gascket Ø112,5 X 1/64" With 3 Holes Ø7,5Mm	1
9	6020310083-6	Flat Head Allen Bolt 1/4" X 1/2" 20F Unc1A Cl8.8 Rt (Phosphated)	5
10	6020350056-7	Bearing 32210	1
11	6020350074-5	Bearing 32212	1
12	6020350312-4	Retainer Ø63,00 X Ø110,00 X 13,00Mm (Arca 5166 Gb / Sabo 02735 Gb)	1

• Disc Hub (Oil)

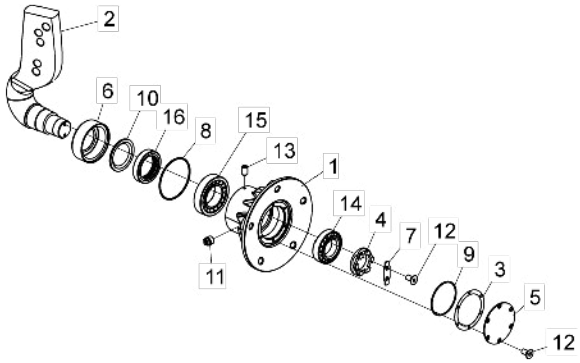

Item	Code	Product Description	All
1	5204020081-9	Disc Hub Oil	1
2	5232130001-4	Hub Axle	1
3	5333010036-9	Gascket Of 0112,5 X 090,5 X 1/64¿	1
4	5456020007-5	Castle Nut Ø48,7 - 14 Fpp-W (Special)	1
5	5538010002-8	Oil Hub Cover	1
6	5538020001-4	Rear Cover Of Oil Disc Cover	1
7	5558020002-7	Lock Of Castle Nut (Small)	1
8	6020010042-8	O´Ring 2-245 N3006-90Nbr (101,32)	1
9	6020010062-2	O´Ring 6-072 N3006-90Nbr (90,00)	1
10	6020010468-7	Washer 10.001	1
11	50810100076	Hexagonal Head Plug 3/4" - R.3/8" - 19F - Bspt(Gas)	1
12	6020310083-6	Flat Head Allen Bolt 1/4" X 1/2" 20F Unc1A Cl8.8 Rt (Phosphated)	8
13	6020310096-8	Allen Bolt S/C 5/16" X 1/2" 18F Unc1A Cl12.9 Rt (Phosphated)	2
14	6020350056-7	Bearing 32210	1
15	6020350074-5	Bearing 32212	1
16	6020350260-8	Retainer Ø63,50 X Ø90,00 X 17,50Mm (Arca 5030 Gb / Repasy 10001N)	1

• Fixed Scraper

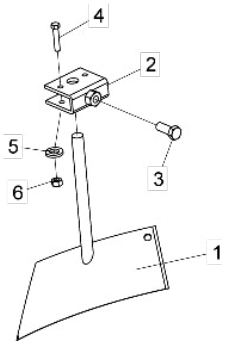

Item	Code	Product Description	All
1	5352010001-2	Complete Fixed Scraper	1
2	5460020002-2	Scraper Of Complete Clamp	1
3	6020311069-6	Hexagonal Head Bolt 5/8" X 1.3/4" 11F Unc1A Gr5 Rt Wth Point (Bichromated)	1
4	6020311035-1	Hexagonal Head Bolt 3/8" X 2" 16F Unc1A Gr2 Rp (Bichromated)	2
5	6020010406-7	Pressure Washer 3/8" Media Industry (Bichromated)	2
6	6020310746-6	Hexagonal Nut 3/8" 16F Unc Gr5 Ch.9/16" Alt.8,50Mm (Bichromated)	2

• Oscilating Scraper

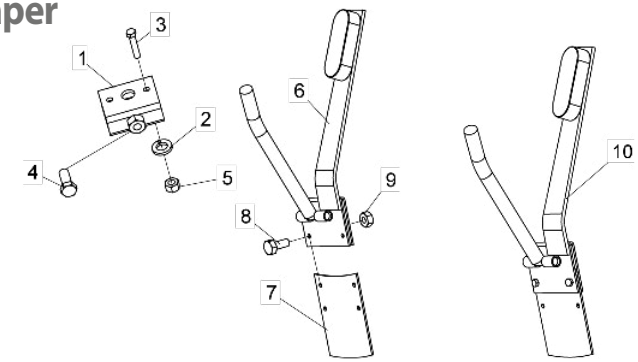

Item	Code	Product Description	All
1	5460020002-2	Scraper Of Complete Clamp	1
2	6020010406-7	Pressure Washer 3/8" Media Industry (Bichromated)	2
3	6020311035-1	Hexagonal Head Bolt 3/8" X 2" 16F Unc1A Gr2 Rp (Bichromated)	2
4	6020311069-6	Hexagonal Head Bolt 5/8" X 1.3/4" 11F Unc1A Gr5 Rt Wth Point (Bichromated)	1
5	6020310746-6	Hexagonal Nut 3/8" 16F Unc Gr5 Ch.9/16" Alt.8,50Mm (Bichromated)	2
6	5090070008-0	Support	1
7	5340010001-9	Blade Of Oscilating Scraper	1
8	6020311001-7	Hexagonal Head Bolt 1/4" X 5/8" 20F Unc1A Gr5 Rt (Bichromated)	2
9	6020310742-3	Hexagonal Nut 1/4" 20F Unc Gr5 Ch.7/16" Alt.5,50Mm (Bichromated)	2
10	5352020001-7	Complete Oscilating Scraper	1

• Complete Guide Wheel

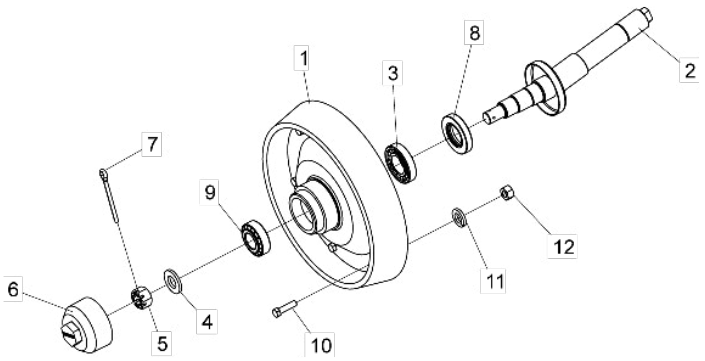

Item	Code	Product Description	All
1	5288010007-6	Ring With Hub Of Guide Wheel	1
2	5232030083-5	Axle With Guide Wheel Cap	1
3	6020350080-0	Bearing 30207	1
4	5024010001-8	Smooth Washer Ø23,5 X Ø44,5 X 4,75Mm	1
5	6020310798-9	Castle Hexagonal Nut 7/8" 14F Unf Gr5 Ch.1.1/4" Alt.22,00Mm (Bichromated)	1
6	5096020001-0	Cap With Hexagonal Of Guide Wheel	1
7	6020050109-0	Cotterpin 1/8" X 1.1/2" (White Galvanised)	1
8	6020350246-2	Retainer Ø41,00 X Ø73,00 X 13,00Mm (Arca 5156 Gb / Sabo 02737 Gb)	1
9	6020350062-1	Bearing 32206	1
10	6020311029-7	Hexagonal Head Bolt 3/8" X 1.1/2" 16F Unc1A Gr5 Rt (Bichromated)	6
11	6020010406-7	Pressure Washer 3/8" Media Industry (Bichromated)	6
12	6020310746-6	Hexagonal Nut 3/8" 16F Unc Gr5 Ch.9/16" Alt.8,50Mm (Bichromated)	6

• Guide Wheel Complete Support

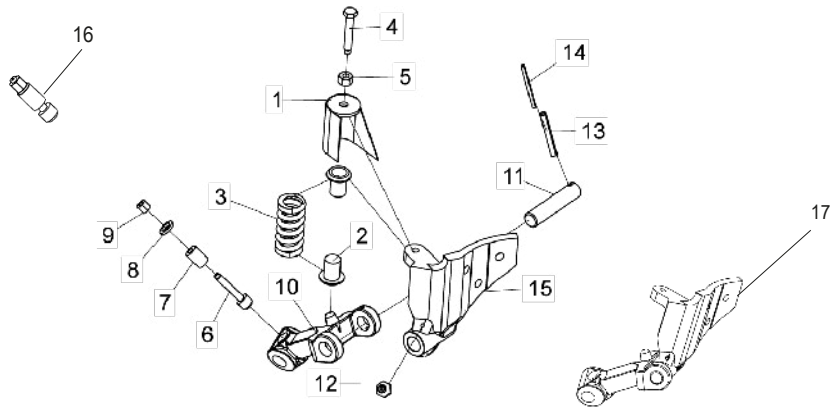

Item	Code	Product Description	All
1	5106010027-0	Spring Complete Protector Cover	1
2	5248010001-8	Back Spring	2
3	6020250281-7	Compression Helical Spring Ø43 X Ø67 X 141Mm Wire=Ø12Mm	1
4	6020311102-1	Hexagonal Head Bolt 3/4" X 4.1/2" 10F Unc1A Gr5 Rt Special (Bichromated)	1
5	6020310770-9	Hexagonal Nut 3/4" 10F Unc Gr5 Ch.1.7/32" Alt.18,50Mm (Bichromated)	1
6	5420080007-1	Bolt Of Jaw Of Guide Wheel	1
7	5128010001-7	Guide Wheel Support	1
8	6020010412-1	Pressure Washer 5/8" Media Industry (Bichromated)	1
9	6020310808-0	Double Hexagonal Nut 5/8" 18F Unf Gr5 Ch.15/16" H.21,50Mm (Bichromated)	1
10	5530040004-2	Lower Support Of Guide Wheel	1
11	5232020001-6	Axle Of Lower Support Union	1
12	6020130108-7	Grease Fitting 1/8" Straight Bsp-28F	1
13	6020310489-0	Heavy Elastic Pin Ø10 X 75Mm (Seeger Reno 701.224)	1
14	6020310487-4	Heavy Elastic Pin Ø6 X 75Mm (Seeger Reno 701.171)	1
15	5530040002-6	Guide Wheel Upper Support	1
16	5420010043-6	Complete Bolt W/Jaw	1
17	5530040010-7	Complete Guide Wheel Support	1

• Depth Wheel w/ Handle

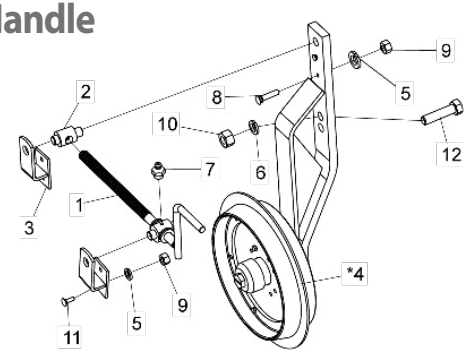

* Item 4 - See page 10

Item	Code	Product Description	All
1	5382010001-4	Complete Crank	1
2	5456030001-0	Special Nut 28,4 X 4F Oscilating	1
3	5460020001-4	Clamp	2
4	5498010002-5	Depth Wheel	1
5	6020010406-7	Pressure Washer 3/8" Media Industry (Bichromated)	4
6	6020010420-2	Pressure Washer 1" Media Industry (Bichromated)	1
7	6020130108-7	Grease Fitting 1/8" Straight Bsp-28F	1
8	6020310223-5	Plow Screw Type A3 3/8" X 1.3/4" 16F Unc1A Gr2 Rp (Bichromated)	2
9	6020310746-6	Hexagonal Nut 3/8" 16F Unc Gr5 Ch.9/16" Alt.8,50Mm (Bichromated)	4
10	6020310778-4	Hexagonal Nut 1" 8F Unc Gr5 Ch.1.5/8" Alt.25,00Mm (Bichromated)	1
11	6020311090-4	French Head Bolt 3/8" X 1.1/4" 16F Unc1A Gr2 Rp (Bichromated)	2
12	6020311133-1	Hexagonal Head Bolt 1" X 4" 8F Unc1A Gr5 Rt (Bichromated)	1

• Depth Wheel+Hub

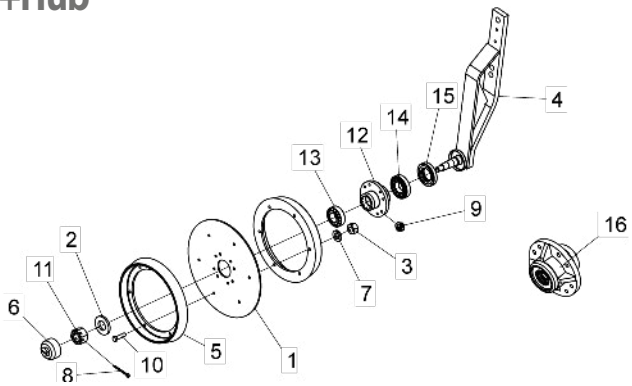

Item	Code	Product Description	All
1	2878438201-1	Coulter Plain Disc Blade 18.12 X 6,00 Hc Rd 83Mm + 8H Rd 11Mm R=69,5Mm + 6H Rd 11Mm R=165Mm	1
2	5024010001-8	Smooth Washer Ø23,5 X Ø44,5 X 4,75Mm	1
3	6020310746-6	Hexagonal Nut 3/8" 16F Unc Gr5 Ch.9/16" Alt.8,50Mm (Bichromated)	14
4	5326030011-0	Shank With Depth Control Wheel Axle	1
5	6010600004-5	Ring Of Deph Wheel	2
6	5096020002-8	Cap With Hexagonal Of Deph Wheel	1
7	6020010406-7	Pressure Washer 3/8" Media Industry (Bichromated)	14
8	6020050109-0	Cotterpin 1/8" X 1.1/2" (White Galvanised)	1
9	6020130108-7	Grease Fitting 1/8" Straight Bsp-28F	1
10	6020311029-7	Hexagonal Head Bolt 3/8" X 1.1/2" 16F Unc1A Gr5 Rt (Bichromated)	14
11	6020310798-9	Castle Hexagonal Nut 7/8" 14F Unf Gr5 Ch.1.1/4" Alt.22,00Mm (Bichromated)	1
12	5204010076-8	Wheel Hub	1
13	6020350062-1	Bearing 32206	1
14	6020350080-0	Bearing 30207	1
15	6020350246-2	Retainer Ø41,00 X Ø73,00 X 13,00Mm (Arca 5156 Gb / Sabo 02737 Gb)	1
16	5204010434-8	Complete Depth Wheel Hub	1

• Complete Support

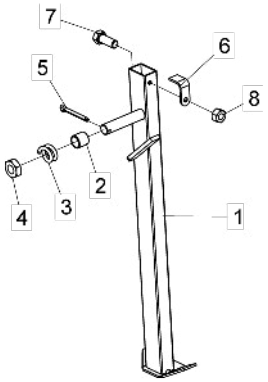

Item	Code	Product Description	All
1	5530030043-9	Support	1
2	5080020115-0	Bushing Of Ø26,8 X Ø32 X 30Mm	1
3	5400010027-0	Helical Compression Spring Ø43,5 X 08 X 35,00Mm	1
4	6020310786-5	Hexagonal Nut 1" 8F Unc Gr5 Ch.1.5/8" Alt.15,00Mm (Bichromated)	1
5	6020050116-3	Cotterpin 1/4" X 2" (White Galvanised)	1
6	5558060004-1	Lock Of Support	1
7	6020310054-2	Hexagonal Head Bolt 3/8" X 1" 16F Unc1A Gr2 Rt (Bichromated)	1
8	6020310746-6	Hexagonal Nut 3/8" 16F Unc Gr5 Ch.9/16" Alt.8,50Mm (Bichromated)	1

• Stickers

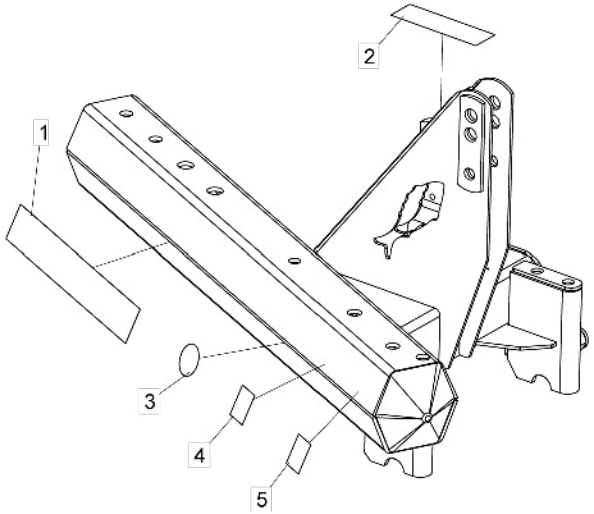

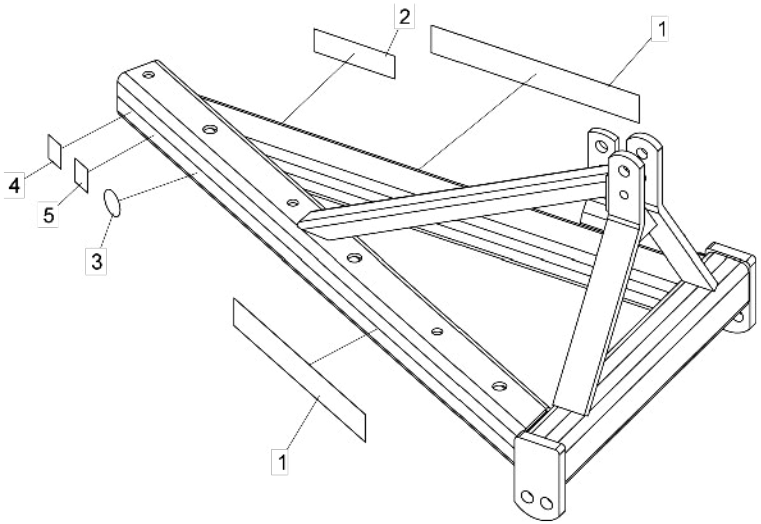

Item	Code	Product Description	All	AF	AFL
1	6020071022-6	Sticker For Af Baldan		2	
1	6020071102-8	Sticker Afl (500 X 70Mm)			2
2	6020070886-8	Sticker Lubricate And Retighten (58 X 195Mm)	1		
3	5206010317-8	Sticker "Ok" Approved Quality Control	1		
4	6020071027-7	Sticker Certificado Iso 9001-2008 (48 X 60Mm)	1		
5	6020071026-9	Sticker Brazilian Company(48 X 60Mm)	1		

Item 1

Item 1

Item 2

Item 3

Item 4

Item 5

Numerical Index

Code	Page	Item	Code	Page	Item	Code	Page	Item	Code	Page	Item	Code	Page	Item	Code	Page	Item
2669426523-4	4	24	5024010007-7	6	2	5232030083-5	9	2	5530050001-2	7	3	6020070886-8	11	2	6020310786-5	10	4
2669426523-4	5	30	5024010007-7	6	2	5232130001-4	7	2	5530050002-0	5	*14	6020071022-6	11	1	6020310788-1	4	7
2669436523-9	4	24	5024010007-7	7	4	5232130001-4	8	2	5530050002-0	7	2	6020071026-9	11	5	6020310788-1	5	25
2669436523-9	5	30	5024010012-3	4	10	5248010001-8	9	2	5530050003-9	7	2	6020071027-7	11	4	6020310798-9	9	5
2669436533-6	4	24	5024010076-0	4	18	5288010007-6	9	1	5530050009-8	4	*11	6020071102-8	11	1	6020310798-9	10	11
2669436533-6	5	30	5024010087-5	4	17	5326030011-0	10	4	5530050010-1	4	*11	6020130108-7	7	7	6020310808-0	9	9
2670436523-2	4	24	5024010087-5	5	3	5333010036-9	8	3	5530050011-0	4	*3	6020130108-7	9	12	6020311001-7	8	8
2670436523-2	5	30	5024010091-3	4	5	5340010001-9	8	7	5530050012-8	4	*11	6020130108-7	10	7	6020311029-7	9	10
2670436533-0	4	24	5024010091-3	5	4	5352010001-2	8	1	5530050013-6	4	*3	6020130108-7	10	9	6020311029-7	10	10
2670436533-0	5	30	5068010004-4	6	3	5352010039-0	4	*27	5530050014-4	4	*11	6020190118-1	7	8	6020311035-1	8	4
2670476523-0	4	24	5068010004-4	6	3	5352010039-0	5	*34	5538010001-0	7	4	6020250281-7	9	3	6020311035-1	8	3
2670476523-0	5	30	5068010005-2	6	3	5352010040-3	4	*4	5538010002-8	8	5	6020310054-2	10	7	6020311069-6	8	3
2671436523-0	4	24	5068010054-0	6	4	5352010040-3	5	*6	5538020001-4	8	6	6020310083-6	7	9	6020311069-6	8	4
2671476523-9	4	24	5068010054-0	6	4	5352020001-7	8	10	5558010001-4	5	15	6020310083-6	8	12	6020311090-4	10	11
2769426523-0	4	24	5068010056-7	6	4	5382010001-4	10	1	5558020002-7	7	5	6020310096-8	8	13	6020311097-1	7	10
2769426523-0	5	30	5068010056-7	6	5	5400010027-0	10	3	5558020002-7	8	7	6020310223-5	10	8	6020311098-0	5	26
2769436523-5	4	24	5080020114-1	7	9	5420010043-6	9	16	5558060004-1	10	6	6020310234-0	4	20	6020311098-0	7	5
2769436523-5	5	30	5080020115-0	10	2	5420010061-4	5	7	6010600004-5	10	5	6020310234-0	5	20	6020311098-0	7	6
2770436523-9	4	24	5081010007-6	8	11	5420010062-2	5	8	6020010042-8	8	8	6020310487-4	9	14	6020311099-8	5	27
2770436523-9	5	30	5090070008-0	8	6	5420080007-1	9	6	6020010062-2	8	9	6020310489-0	9	13	6020311099-8	7	6
2770476523-7	4	24	5096020001-0	9	6	5432050009-8	6	7	6020010285-4	7	6	6020310742-3	8	9	6020311099-8	7	7
2770476523-7	5	30	5096020002-8	10	6	5432050010-1	5	9	6020010406-7	8	5	6020310746-6	8	6	6020311102-1	9	4
2771436523-7	4	24	5106010027-0	9	1	5432050010-1	6	7	6020010406-7	8	2	6020310746-6	8	5	6020311110-2	4	13
2863407224-3	4	23	5128010001-7	9	7	5432050010-1	6	7	6020010406-7	9	11	6020310746-6	9	12	6020311115-3	5	28
2863407224-3	5	29	5136020137-0	6	5	5456020007-5	7	3	6020010406-7	10	5	6020310746-6	10	9	6020311121-8	4	6
2865407224-0	4	23	5138010002-2	4	26	5456020007-5	8	4	6020010406-7	10	7	6020310746-6	10	3	6020311133-1	10	12
2865407224-0	5	29	5138010005-7	5	32	5456030001-0	10	2	6020010410-5	4	19	6020310746-6	10	8	6020311143-9	4	12
2878438201-1	10	1	5138030001-3	4	25	5460020001-4	10	3	6020010410-5	5	16	6020310754-7	4	22	6020311150-1	4	14
5022010001-1	6	1	5138030001-3	5	31	5460020002-2	8	2	6020010412-1	9	8	6020310754-7	5	21	6020350056-7	7	10
5022010002-0	6	1	5204010076-8	10	12	5460020002-2	8	1	6020010414-8	5	17	6020310770-9	4	8	6020350056-7	8	14
5022010003-8	6	1	5204010434-8	10	16	5498010002-5	10	4	6020010414-8	6	8	6020310770-9	5	22	6020350062-1	9	9
5022010004-6	6	1	5204020001-0	5	*5	5498010015-7	4	*2	6020010414-8	6	8	6020310770-9	6	10	6020350062-1	10	13
5022010013-5	4	*1	5204020001-0	7	1	5498010015-7	5	*10	6020010414-8	7	3	6020310770-9	6	10	6020350074-5	7	11
5022010014-3	4	*1	5204020001-0	7	1	5498010110-2	4	*28	6020010414-8	7	5	6020310770-9	7	4	6020350074-5	8	15
5022010015-1	4	*1	5204020004-5	7	1	5498010110-2	5	*33	6020010418-0	4	16	6020310770-9	7	8	6020350080-0	9	3
5022010016-0	4	*1	5204020004-5	7	1	5530011171-7	5	11	6020010418-0	5	18	6020310770-9	9	5	6020350080-0	10	14
5022010775-0	5	1	5204020081-9	8	1	5530030001-3	4	*21	6020010420-2	5	19	6020310774-1	4	15	6020350246-2	9	8
5022010808-0	5	1	5204020082-7	7	1	5530030043-9	10	1	6020010420-2	6	9	6020310774-1	5	23	6020350246-2	10	15
5022010809-8	5	1	5206010317-8	11	3	5530040001-8	5	*12	6020010420-2	6	9	6020310778-4	4	9	6020350260-8	8	16
5022010842-0	4	*29	5232010001-1	6	6	5530040001-8	7	2	6020010420-2	10	6	6020310778-4	6	11	6020350312-4	7	12
5022010843-8	6	1	5232010359-2	6	6	5530040002-6	9	15	6020010468-7	8	10	6020310778-4	10	10			
5024010001-8	9	4	5232010374-6	6	6	5530040004-2	9	10	6020050109-0	9	7	6020310782-2	5	24			
5024010001-8	10	2	5232010374-6	6	6	5530040010-7	9	17	6020050109-0	10	8	6020310782-2	6	11			
5024010007-7	5	2	5232020001-6	9	11	5530050001-2	5	*13	6020050116-3	10	5	6020310782-2	6	11			

Baldan Implementos Agrícolas S/A.

Avenida Baldan, 1500 | Nova Matão
Zip code: 15993-000 | Matão/SP. | Brazil
Phone.: +55 (16) 3221-6500 | Fax: (16) 3382-4212 | 3382-2480
www.baldan.com.br
sac@baldan.com.br | export@baldan.com.br