Parts Catalog

ASDA MULTI

Subsoiler with Automatic Shank (Plain Spring)

BIA®
Baldan

Index

ASDA MULTI (Pain Spring) *4*
Table ASDA MULTI (Plain Spring) *5*
Complete Hitch Drawbar *6*
Complete Cutting Disc *6*
Cart With Coulter Disc *7*
Main Frame *8*
Articulation Support *9*
Regulator (3rd Point) *9*
Complete Subsoiler Shank (Plain Spring) *10*
Hydraulic System For Wheels *11*
Cylinder 6020055720-7 ..... *11*
Complete Platform *12*
Complete Seed Hopper *13*
Table Complete Seed Hopper *14*
Complete Fertilizer Hopper (Hydralic System) *15*
Table Complete Fertilizer Hopper (Hydralic System) *16*
Seed And Fertilizer Tube *17*
Roller With Oil or Grease Bearings *17*
Bearing (Grease) *18*
Radial Bearing (Oil) *18*
Hydraulic Trasmission System *19*
Stickers *20*
NUMERICAL INDEX **21**

• ASDA MULTI (Plain Spring)

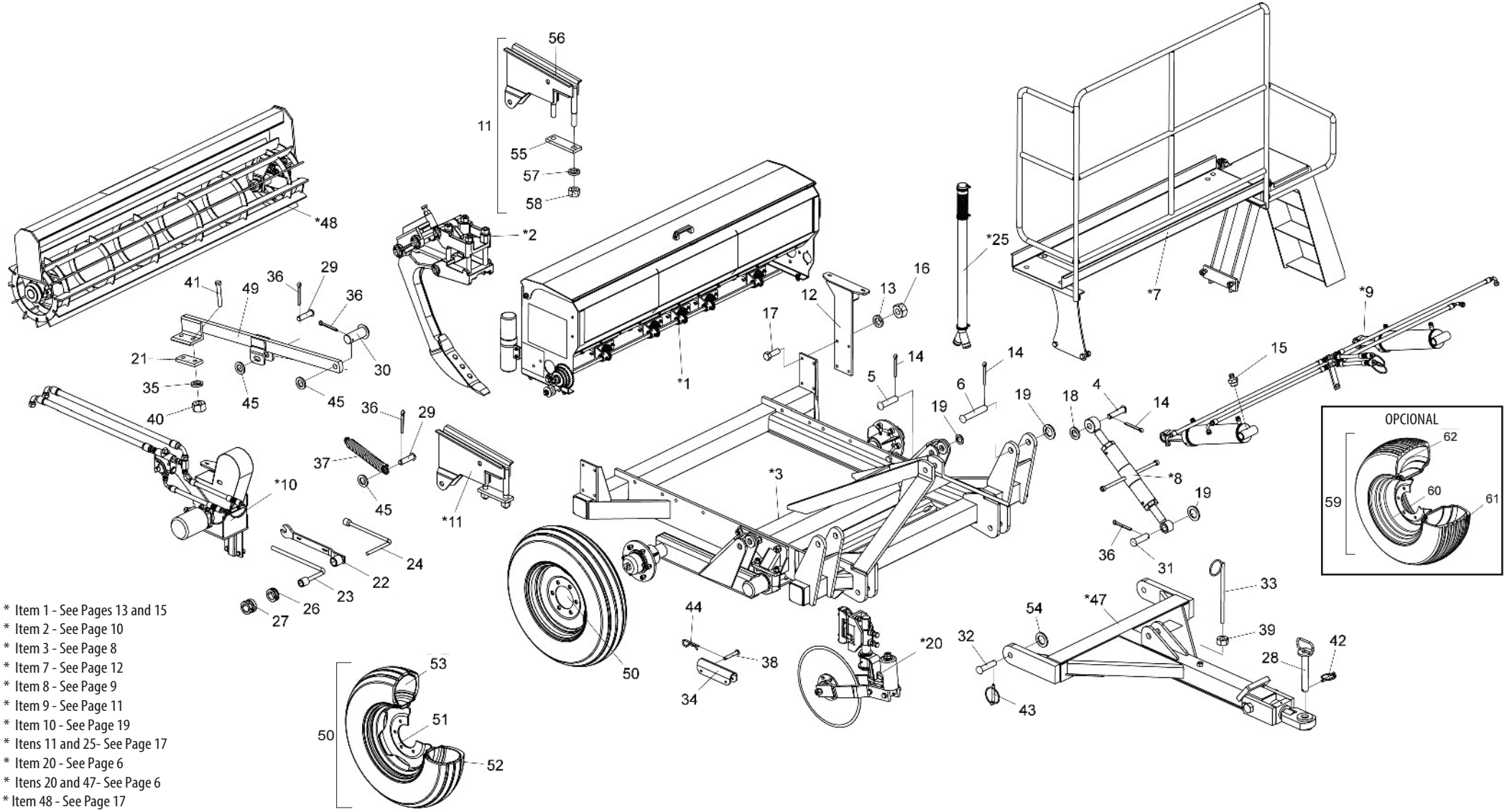

* Item 1 - See Pages 13 and 15
* Item 2 - See Page 10
* Item 3 - See Page 8
* Item 7 - See Page 12
* Item 8 - See Page 9
* Item 9 - See Page 11
* Item 10 - See Page 19
* Itens 11 and 25- See Page 17
* Item 20 - See Page 6
* Itens 20 and 47- See Page 6
* Item 48 - See Page 17

• Table ASDA MULTI (Plain Spring)

Item	Code	Product description	All	05 Shanks	07 Shanks	09 Shanks
*1	5208011288-2	Seed Hopper For Asda-Multi 5 Shanks		1		
*1	5208011280-7	Seed Hopper For Asda-Multi 7 Shanks			1	
*1	5208011285-8	Seed Hopper For Asda-Multi 9 Shanks				1
*1	5208012842-8	Fettilizer Hopper For Asda-Multi 5 Shanks(Hydralic Motor)		1		
*1	5208012843-6	Fettilizer Hopper For Asda-Multi 7 Shanks(Hydralic Motor)			1	
*1	5208012844-4	Fettilizer Hopper For Asda-Multi 9 Shanks(Hydralic Motor)				1
*2	5326010439-6	Complete Subsoiler Shank(Plain Spring System)		5	7	9
*3	5404010813-3	Complete Main Frame Asda Multi - 5 Skanks (Hydraulic Transmission System)		1		
*3	5404010834-6	Complete Main Frame Asda Multi - 7 Skanks (Hydraulic Transmission System)			1	
*3	5404010836-2	Complete Main Frame Asda Multi - 9 Skanks (Hydraulic Transmission System)				1
4	5432120021-7	French Head Pin Ø1" X 105Mm	1			
5	5432120029-2	French Head Pin Ø30,53 X 113Mm	2			
6	5432120117-5	French Head Pin Ø30,53 X 165Mm	2			
*7	5440010802-4	Complete Plateform Asda Multi 5 Shanks		1		
*7	5440010801-6	Complete Plateform Asda Multi 7 Shanks			1	
*7	5440010803-2	Complete Plateform Asda Multi 9 Shanks				1
*8	5484010119-6	Regulator R.1.1/4" Unc 530Mm (Closed) - 730Mm (Open)	1			
*9	5528010687-8	Hydraulic System Asda-Multi (5/5Shanks)		1		
*9	5528010670-3	Hydraulic System Asda Multi (7/7Shanks)			1	
*9	5528010689-4	Hydraulic System Asda-Multi (9/9Shanks)				1
*10	5528010840-4	Transmision Hydraulic System - Asda Multi - With Seed System	1			
*10	5528010841-2	Transmision Hydraulic System - Asda Multi - With Fertilizer System	1			
11	5530010428-1	Complete Support		2	4	4
12	5530011639-5	Left Support Of Deposit	1			
13	6020010410-5	Pressure Washer 1/2" Media Industry	4			
14	6020050116-3	Cotterpin 1/4" X 2"	5			
15	6020130108-7	Grease Fitting 1/8"		4	4	5
16	6020310754-7	Hexagonal Nut 1/2" 12F W Gr5 Ch.7/8" Height 12,00Mm	4			
17	6020312001-2	Hexagonal Head Bolt 1/2" X 1.1/2" 12F W Gr5 Rt	4			
18	5024010039-5	Smooth Washer Ø26,2 X Ø44 X 4,75Mm		6	16	16
19	5024010061-1	Smooth Washer Ø33,5 X Ø53,5 X 4,75Mm	1			
*20	5124010624-1	Complete Cart With Coulter Disc (Plain 18" X 5Mm)		5	7	9
21	5040120971-6	Bar Of 2.1/2" X 5/8" X 140Mm		2	4	4
22	5138010005-7	Wrench For Hexagonal Nut 3/4" - 7/8"	1			
23	5138050005-5	Wrench "L" For Hexagonal Nut 5/8"	1			
24	5138050010-1	Wrench "L" For Hexagonal Nut 1/2"	1			
*25	5150010027-7	Conductor Asda Multi - Seed Tube		5	7	9
*25	5150010036-6	Conductor Asda Multi-Fertilizer Tube		5	7	9
26	5348050006-3	Complete Limiter Of Ø42 X 25Mm	4			

Item	Code	Product description	All	05 Shanks	07 Shanks	09 Shanks
27	5348050009-8	Complete Limiter Of Ø42 X 49,5Mm	4			
28	5432010025-1	Pin Of Ø1.1/4" X 215Mm	1			
29	5432120022-5	French Head Pin Ø1" X 90Mm		4	8	8
30	5432120040-3	French Head Pin Ø1" X 53Mm		2	4	4
31	5432120090-0	French Head Pin Ø30,53 X 97Mm	1			
32	5432120108-6	French Head Pin Ø28 X 105Mm	3			
33	5530060001-7	Small Support Of Hoses	1			
34	5558040023-9	Piston Lock Of 240Mm	2			
35	6020010414-8	Pressure Washer 3/4" Media Industry		4	8	8
36	6020050116-3	Cotterpin 1/4" X 2"		12	18	18
37	6020250348-1	Helical Spring Ø31 X Ø50 X 290Mm		2	4	4
38	6020310421-1	French Head Pin Ø9,8 X 61Mm		4	4	4
39	6020310760-1	Hexagonal Nut 5/8" 11F Unc Gr5 Ch.1.1/16" Height 15,00Mm	3			
40	6020310770-9	Hexagonal Nut 3/4" 10F Unc Gr5 Ch.1.7/32" Height 18,50Mm		4	8	8
41	6020311103-0	Hexagonal Head Bolt 3/4" X 5" 10F Unc1A Gr5 Rp		4	8	8
42	6020390293-2	Lock Ø5,75 X 40Mm	1			
43	6020390301-7	Lock Ø5,75 X 50Mm	2			
44	6020390308-4	Lock Nma - Type "R" Ø4,5 X 80Mm		4	4	4
45	5024010039-5	Smooth Washer Ø26,2 X Ø44 X 4,75Mm	1			
46	5024010061-1	Smooth Washer Ø33,5 X Ø53,5 X 4,75Mm	4			
*47	5084040109-7	Complete Hitch Drawbar	1			
*48	5502010070-1	Levelling Roller Of 1900Mm Grease Complete For Asda Multi 5 Shanks		1		
*48	5502010071-0	Levelling Roller Of 1300Mm Grease Complete For Asda Multi 7 Shanks			1	
*48	5502010072-8	Levelling Roller Of 1600Mm Grease Complete For Asda Multi 9 Shanks				1
49	5072010059-0	Complete Arm	2			
50	5498100005-9	Complete Wheel 750 X 16	2			
51	6020350402-3	Rim 5,5" X 16" 16.392	2			
52	6020310406-8	Tyre 750 X 16 X 10 Ply	2			
53	6020050356-5	Inner Tube 750X16	2			
54	5024010192-8	Smooth Washer Ø30 X Ø52 X 4,75Mm(Galvanised)	3			
55	5040120970-8	Bar Of 2.1/2" X 5/8" X 200Mm	1	2	4	4
56	5530010429-0	Support Of Arm	1	2	4	4
57	6020010420-2	Pressure Washer 1" Media Industry	2	4	8	8
58	6020310778-4	Hexagonal Nut 1" 8F Unc Gr5 Ch.1.5/8" Height 25,00Mm	2	4	8	8
		Optional				
59	5498100072-5	Complete Wheel 11 X 15 - Bl 10 Ply	2			
60	6020350397-3	Rim 10.0Lbx15" (Wheel 11X15)	2			
61	6020310413-0	Tyre 11X15 Bl 10Ply	2			
62	6020050362-0	Inner Tube Pa 15/16	2			

• Complete Hitch Drawbar

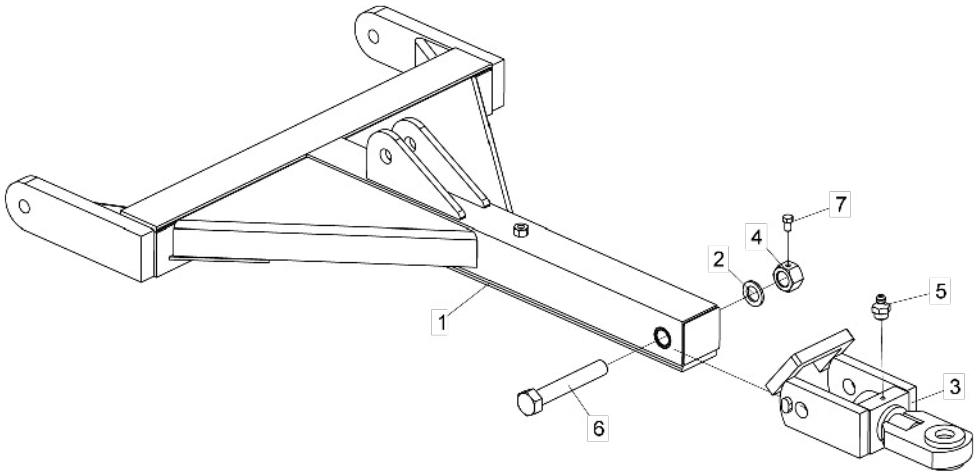

Item	Code	Product description	All
1	5084040107-0	Hitch Drawbar	1
2	5024010061-1	Smooth Washer Ø33,5 X Ø53,5 X 4,75Mm	1
3	5332020007-1	Hitch Shackle	1
4	5456010022-4	Hexagonal Nut 1.1/4" 7F Unc Gr5 Key.2" Height.31,00Mm With Hole R.3/8"	1
5	6020130100-1	Grease Fitting 1/4"	1
6	6020310248-0	Hexagonal Head Bolt 1.1/4" X 8" 7F Unc1A Gr5 Rp	1
7	6020311030-0	Hexagonal Head Bolt 3/8" X 5/8" 16F Unc1A Gr2 Rt	1

• Complete Cutting Disc

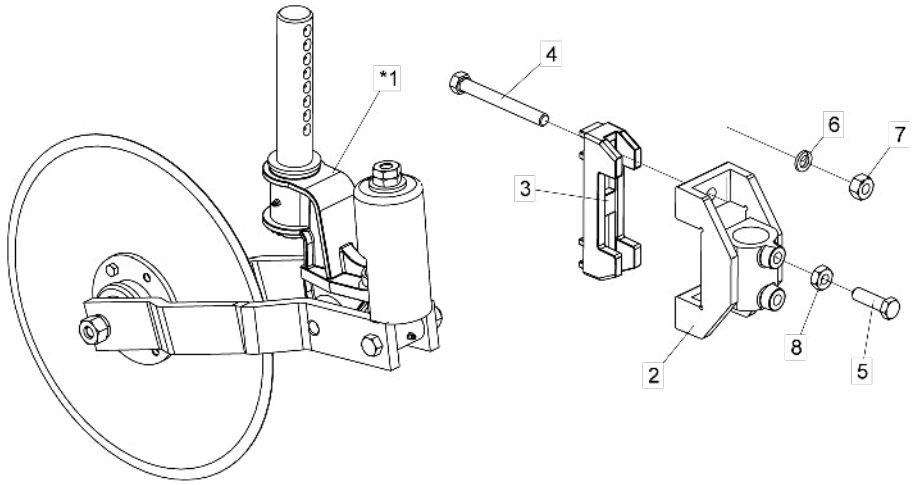

Item	Code	Product description	All
*1	5124010198-3	Cutting Disc (Plain Disc Blade 18" X 5,00Mm)	1
2	5530010953-4	Cutting Disc Support	1
3	6010601523-9	Clamp	1
4	6020311082-3	Hexagonal Head Bolt 5/8" X 5.1/2" 11F Unc1A Gr5 Rp	2
5	6020311043-2	Hexagonal Head Bolt 5/8" X 2.1/4" 11F Unc1A Gr5 Rt Wth Point	2
6	6020010412-1	Pressure Washer 5/8" Media Industry	2
7	6020310760-1	Hexagonal Nut 5/8" 11F Unc Gr5 Ch.1.1/16" Height 15,00Mm	2
8	6020310738-5	Hexagonal Nut 5/8" 11F Unc Gr5 Ch.1.1/16" Height 11,00Mm	2

* Item 1 - See Page 7

• Cutting Disc (Spare)

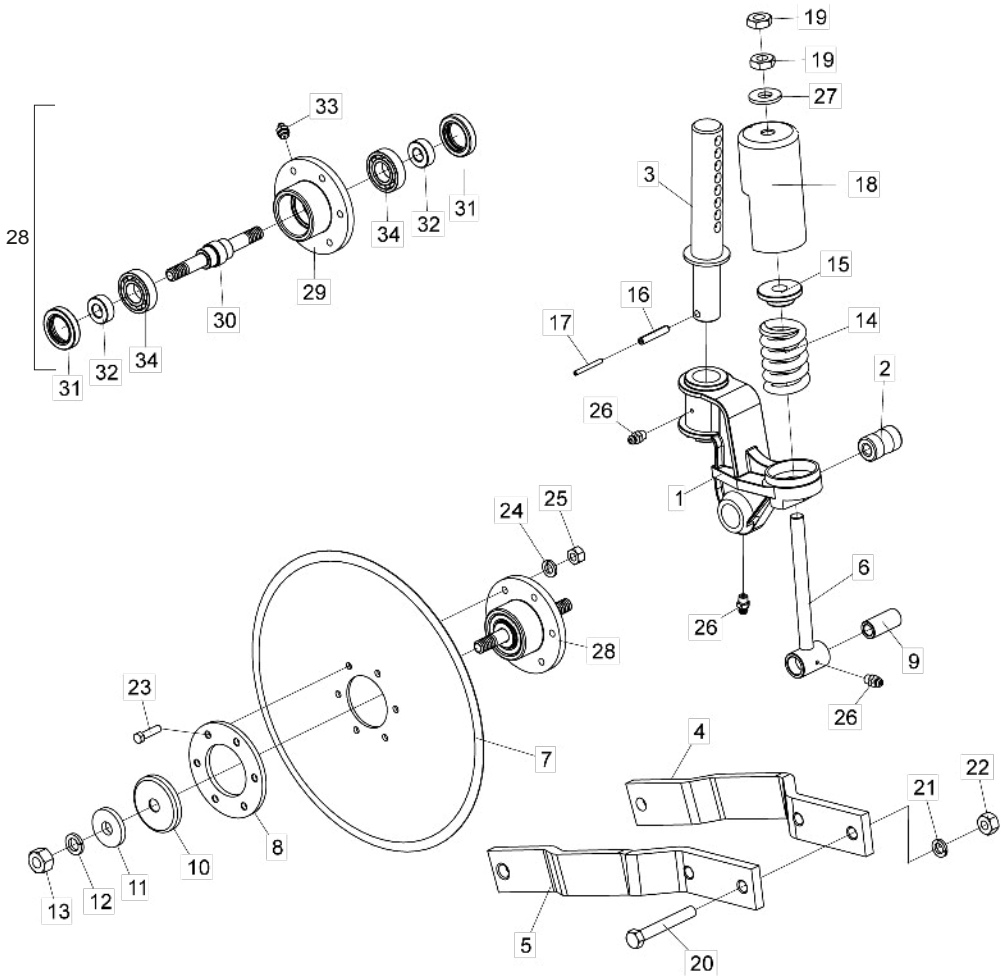

Item	Code	Product description	All
1	5530520076-9	Support Of Cutting Disc	1
2	5080020762-0	Bushing Of Ø16 X Ø36,1 X 55Mm	1
3	5232030133-5	Small Shaft With Washer	1
4	5040010127-0	Left Bar Of Support Of Cutting Disc	1
5	5040010126-1	Right Of Support Of Cutting Disc	1
6	5566010028-7	Rod Spring	1
7	2861427388-9	Coulter Plain Disc Blade 18 X 5,00 Hc Rd 80Mm + 6H Rd 10,3Mm D=115Mm Doble Bevel	1
8	5284010001-4	Flange Of Disc Hub	1
9	5080020661-5	Bushing Of Ø16,2 X Ø26,5 X 57Mm	1
10	5096010028-7	Hub Cap	2
11	5024010289-4	Smooth Washer Ø20 X Ø58 X 8,00Mm	2
12	6020010414-8	Pressure Washer 3/4" Media Industry	2
13	6020310770-9	Hexagonal Nut 3/4" 10F Unc Gr5 Ch.1.7/32" Height 18,50Mm	2
14	6020250281-7	Helical Spring Ø43 X Ø67 X 141Mm	1
15	6010600980-8	Bushing	1
16	6020310510-2	Heavy Elastic Pin Ø10 X 55Mm	1
17	6020310472-6	Heavy Elastic Pin Ø6 X 55Mm	1
18	6020310691-5	Spring Protection	1
19	6020310784-9	Hexagonal Nut 3/4" 10F Unc Gr5 Ch.1.1/4" Height 11,00Mm	2
20	6020311087-4	Hexagonal Head Bolt 5/8" X 4.1/2" 11F Unc1A Gr5 Rp	2
21	6020010412-1	Pressure Washer 5/8" Media Industry	2
22	6020310760-1	Hexagonal Nut 5/8" 11F Unc Gr5 Ch.1.1/16" Height 15,00Mm	2
23	6020311029-7	Hexagonal Head Bolt 3/8" X 1.1/2" 16F Unc1A Gr5 Rt	6
24	6020010406-7	Pressure Washer 3/8" Media Industry	6
25	6020310746-6	Hexagonal Nut 3/8" 16F Unc Gr5 Ch.9/16" Height 8,50Mm	6
26	6020130100-1	Grease Fitting 1/4"	3
27	5024010007-7	Smooth Washer Ø20,3 X Ø46,5 X 4,75Mm	1
28	5204020099-1	Complete Hub	1
29	5204010088-1	Disc Hub (Spare)	1
30	5232030120-3	Shaft R.Ø3/4" X 186Mm	1
31	6020350201-2	Retainer Ø40,00 X Ø62,00 X 12,00Mm	2
32	5080020761-1	Bushing Of Ø19,1 X Ø40 X 15Mm	2
33	6020130108-7	Grease Fitting 1/8"	1
34	6020350020-6	Bearing 6206	2

• Main Frame

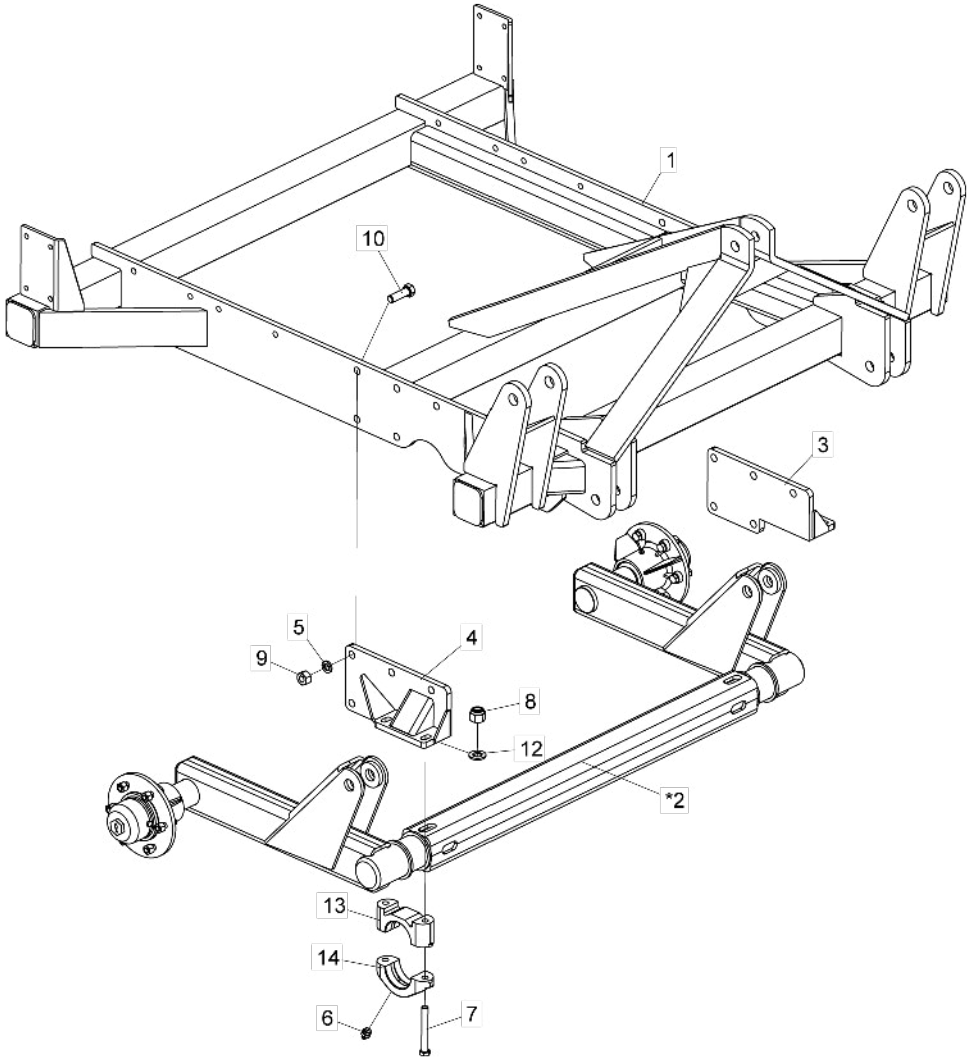

Item	Code	Product description	All	05 Shanks	07 Shanks	09 Shanks
1	5404010814-1	Main Frame Asda Multi 5 Skanks		1		
1	5404010835-4	Main Frame Asda Multi 7 Skanks			1	
1	5404010837-0	Main Frame Asda Multi 9 Skanks				1
*2	5530011145-8	Wheel Support		1		
*2	5530011143-1	Wheel Support			1	
*2	5530011141-5	Wheel Support				1
3	5530011146-6	Left Support Of Bearing	1			
4	5530011147-4	Right Support Of Bearing	1			
5	6020010414-8	Pressure Washer 3/4" Media Industry	10			
6	6020130108-7	Grease Fitting 1/8"	2			
7	6020310559-5	Hexagonal Head Bolt 5/8" X 5" 18F Unf1A Gr8 Rp (Phosphated)	4			
8	6020310761-0	Self-Locking Nut With Nylon Upper 5/8" 18F Unf Gr5 Ch.15/16" H.19,50Mm	4			
9	6020310770-9	Hexagonal Nut 3/4" 10F Unc Gr5 Ch.1.7/32" Height 18,50Mm	10			
10	6020311096-3	Hexagonal Head Bolt 3/4" X 2.1/2" 10F Unc1A Gr5 Rp	10			
11	5368010416-2	Complete Bearing	2			
12	5024010154-5	Smooth Washer Ø16 X Ø29 X 3,00Mm	4			
13	5368010315-8	Lower Bearing	2			
14	5368010313-1	Upper Bearing	2			

* Item 2 - See Page 9

• Articulation Support

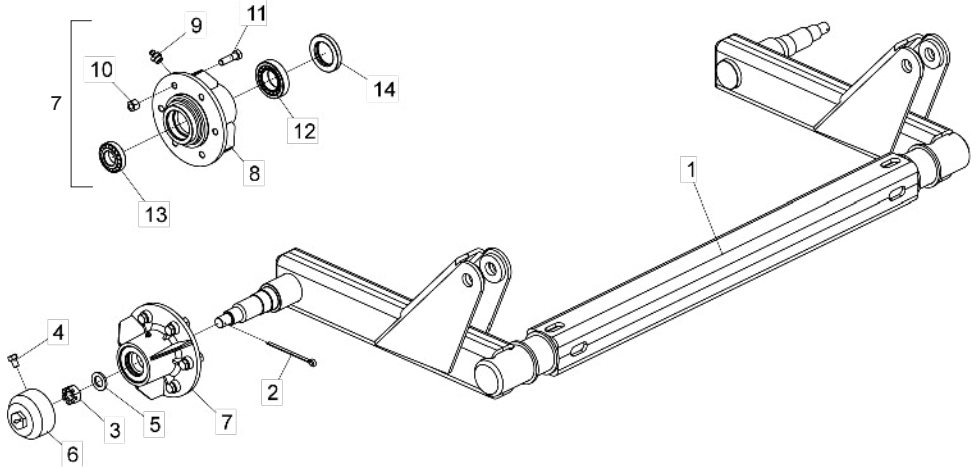

Item	Code	Product description	All	05 Shanks	07 Shanks	09 Shanks
1	5530011144-0	Wheel Support		1		
1	5530011142-3	Wheel Support			1	
1	5530011140-7	Wheel Support				1
2	6020050102-3	Cotterpin 1/8" X 2.1/2"	2			
3	6020310800-4	Nut 1" 14F Uns Gr5 Ch.1.1/2" Height 22,00Mm	2			
4	6020311020-3	Hexagonal Head Bolt 5/16" X 1/2" 18F Unc1A Gr2 Rt	2			
5	5024010039-5	Smooth Washer Ø26,2 X Ø44 X 4,75Mm	2			
6	5096020004-4	Wheel Hub Cap	2			
7	5204060025-6	Spare Hub	2			
8	5204010063-6	Wheel Hub	2			
9	6020130108-7	Grease Fitting 1/8"	2			
10	6020310816-0	Double Conic Hexagonal Nut Of Wheel 9/16" 18F Unf Gr5 Ch.7/8" Height 19,00Mm	12			
11	6020310998-1	Hexagonal Head Bolt 9/16" X 2" 18F Unf1A Gr5 Rp	12			
12	6020350056-7	Bearing 32210	2			
13	6020350080-0	Bearing 30207	2			
14	6020350224-1	Retainer Ø55,00 X Ø90,00 X 12,50Mm	2			

• Regulator (3º Point)

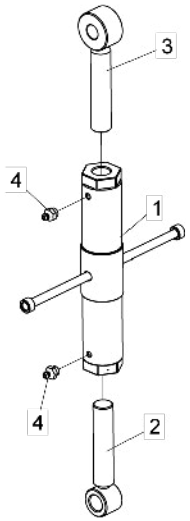

Item	Code	Product description	All
1	5484010029-7	Regulator R.1.1/4" Unc X 415Mm (Spare)	1
2	5484010079-3	Left Regulator Support	1
3	5484040047-9	Right Regulator Support	1
4	6020130108-7	Grease Fitting 1/8"	2

• Complete Subsoiler Shank (Plain Spring)

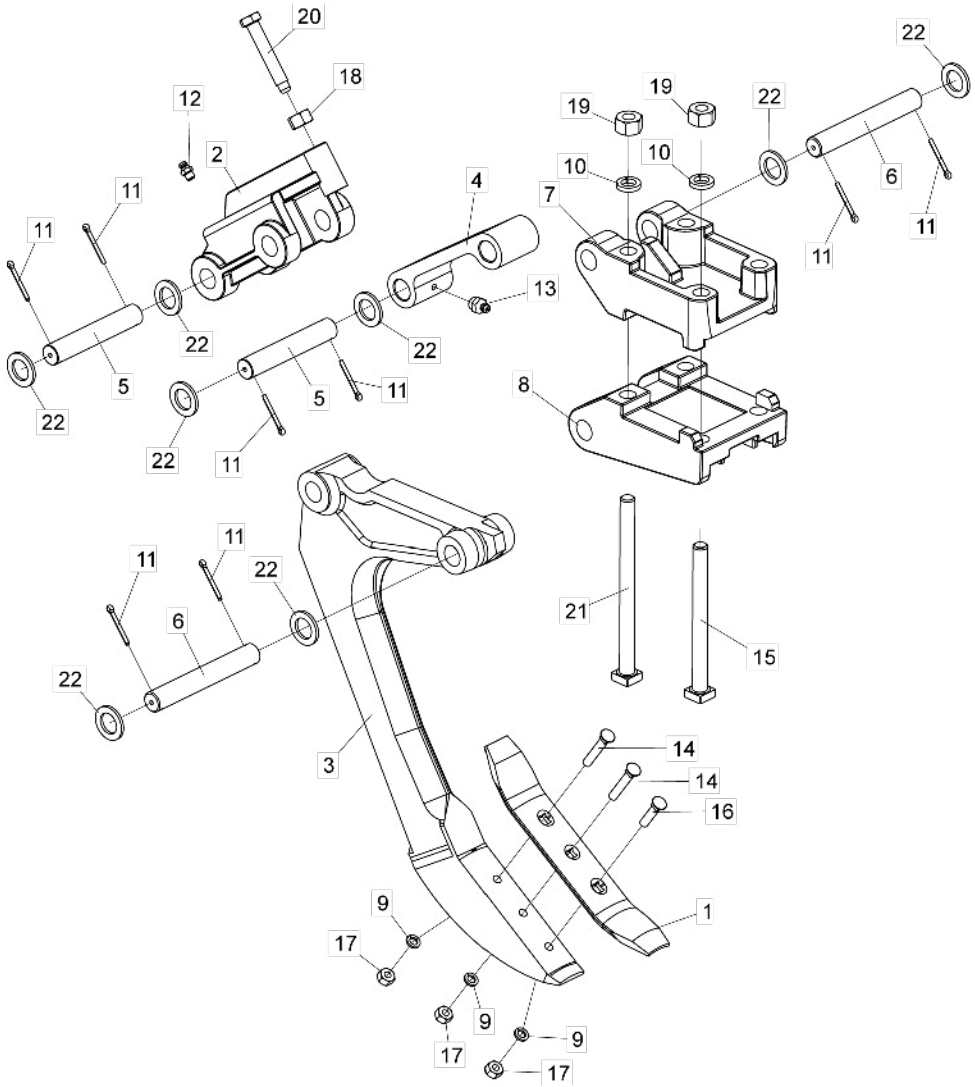

Item	Code	Product description	All
1	5054010003-6	Subsoiler Point (76 X 11Mm)	1
2	5228010020-0	Support Shank Disarm	1
3	5326010068-4	Subsoiler Shank	1
4	5400010110-1	Plain Spring 217,5Mm	1
5	5432090298-6	Flat Pin Ø1.1/4" X 164Mm	2
6	5432090309-5	Flat Pin Ø1.1/4" X 200Mm	2
7	5530011483-0	Upper Support Of Shank	1
8	5530011484-8	Lower Support Of Shank	1
9	6020010410-5	Pressure Washer 1/2" Media Industry	3
10	6020010418-0	Pressure Washer 7/8" Media Industry	4
11	6020050116-3	Cotterpin 1/4" X 2"	8
12	6020130100-1	Grease Fitting 1/4"	1
13	6020130108-7	Grease Fitting 1/8"	2
14	6020310237-5	Screw Type A3 1/2" X 3" 12F Gr2 Rp	2
15	6020310245-6	Square Head Bolt 7/8" X 9.1/2" 9F Unc1A Gr5 Rp	2
16	6020310252-9	Screw Type A3 1/2" X 2.1/4" 12F Gr2 Rp	1
17	6020310754-7	Hexagonal Nut 1/2" 12F W Gr5 Ch.7/8" Height 12,00Mm	3
18	6020310770-9	Hexagonal Nut 3/4" 10F Unc Gr5 Ch.1.7/32" Height 18,50Mm	1
19	6020310774-1	Hexagonal Nut 7/8" 9F Unc Gr5 Ch.1.7/16" Height 22,00Mm	4
20	6020311102-1	Hexagonal Head Bolt 3/4" X 4.1/2" 10F Unc1A Gr5 Rt Special	1
21	6020317431-7	Square Head Bolt 7/8" X 11.1/2" 9F Unc1A Gr5 Rp	2
22	5024010093-0	Smooth Washer Ø33,5 X Ø52,5 X 3,00Mm	8

• Hydraulic System For Wheels

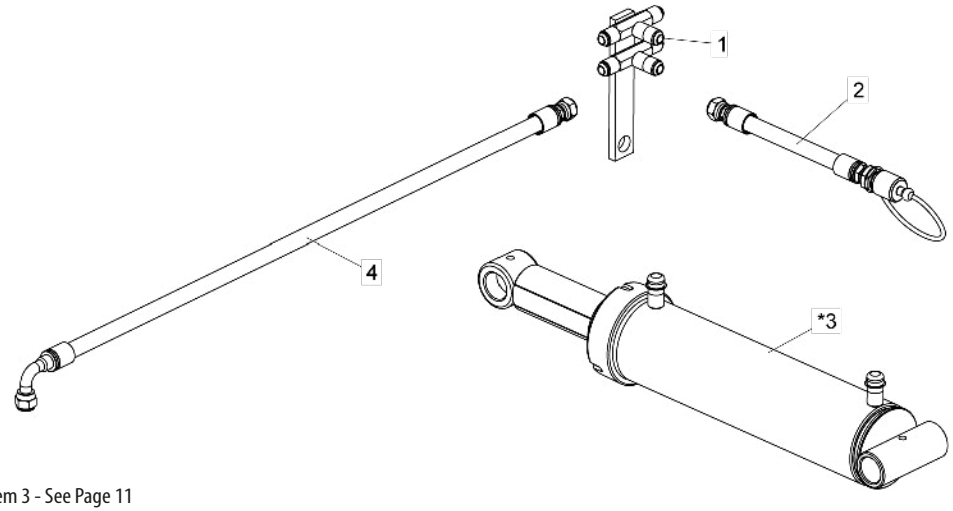

Item	Code	Product description	All	05 Shanks	07 Shanks	09 Shanks
1	5226010019-0	Oil Divider	1			
2	5372011044-6	Hose Ø3/8" X 3500Mm With 1Trg And 1Trf With Male Quickly Coupling	2			
*3	6020055720-7	Hydraulic Cylinder "O.D" Ø1.5/8" X Ø3.1/2" X 241Mm(Course) X 635Mm(Closed)	2			
4	6020250739-8	High Pressure Hydraulic Hose 3/8" X 1150Mm With 1Tcg And 1Trg		2		
4	6020250796-7	High Pressure Hydraulic Hose 3/8" X 2000Mm With 1Tcg And 1Trg				2
4	6020250913-7	High Pressure Hydraulic Hose 3/8" X 1300Mm With 1Tcg And 1Trg			2	
4	6020251004-6	High Pressure Hydraulic Hose 3/8" X 1600Mm With 1Tcg And 1Trg			2	2
4	6020251013-5	High Pressure Hydraulic Hose 3/8" X 900Mm With 1Tcg And 1Trg		2		

* Item 3 - See Page 11

• Cylinder 6020055720-7

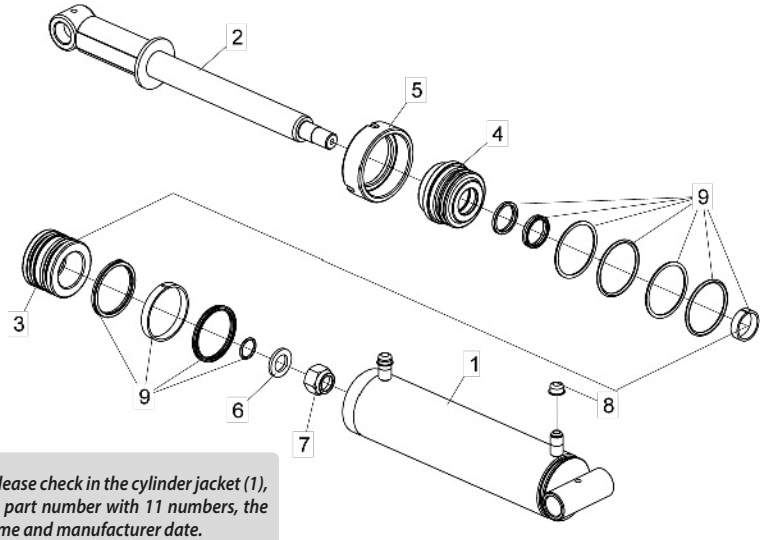

Item	Code	Product description	All
1	5144010301-8	Piston Jacket Ø88,90 x 437,5mm	1
2	5326010454-0	Piston Rod Ø41,27 (1.5/8") x 476.5mm	1
3	5236010001-4	Piston Plung De Ø26,72 X Ø88,30 X 60,00Mm	1
4	5152010010-9	Piston Coupling Ø41,68 X Ø88,70 X 66MM	1
5	5456050001-0	Piston Nut	1
6	5024010323-8	Smooth Washer Ø27 X Ø44,5 X 4,75Mm	1
7	6020310804-7	Self-Locking Nut With Nylon 1" 14F Uns Gr5 Ch.1.1/2" H.28,50Mm	1
8	6020390042-5	Plastic Cover Bt-21(Bt 10.0021.0 Nt) Colourless	2
9	6020190067-3	Repair Kit For Hydraulic Cylinders "D.A" 1.5/8" X 3.1/2"	1

For spare parts order, please check in the cylinder jacket (1), the following: - Baldan part number with 11 numbers, the manufacturer code, name and manufacturer date.

• Complete Plateform

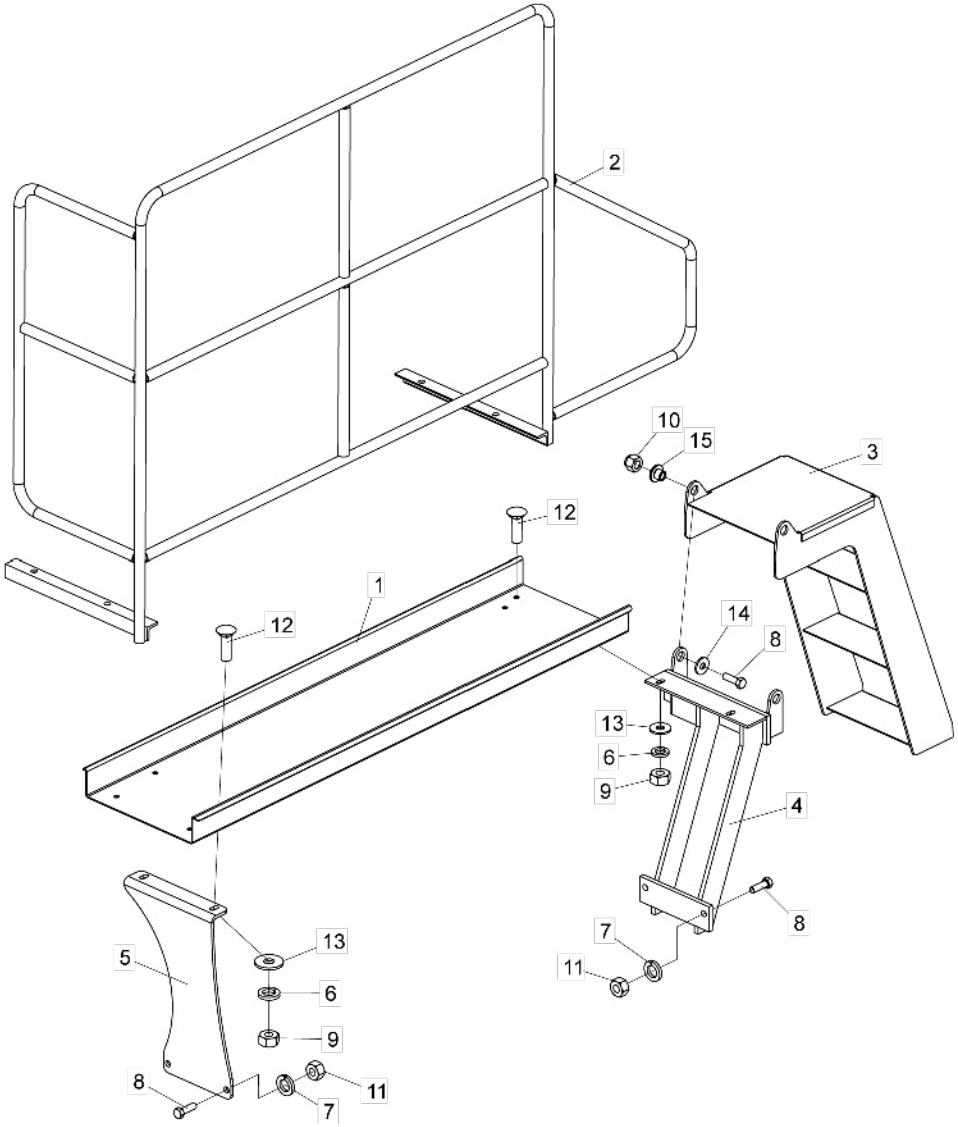

Item	Code	Product description	All	05 Shanks	07 Shanks	09 Shanks
1	5136012257-7	Platform Plate For 5 Shanks		1		
1	5136012233-0	Platform Plate For 7 Shanks			1	
1	5136012248-8	Platform Plate For 9 Shanks				1
2	5196010185-9	Complete Handrail For 5 Shanks		1		
2	5196010183-2	Complete Handrail For 7 Shanks			1	
2	5196010184-0	Complete Handrail For 9 Shanks				1
3	5259010018-8	Stair 3 Steps	1			
4	5530011637-9	Lateral Support Of Platform	1			
5	5530011640-9	Support Of Platform		1	3	3
6	6020010410-5	Pressure Washer 1/2" Media Industry		8	12	12
7	6020010412-1	Pressure Washer 5/8" Media Industry		4	8	8
8	6020310180-8	Hexagonal Head Bolt 5/8" X 2" 11F Unc1A Gr5 Rp		6	10	10
9	6020310754-7	Hexagonal Nut 1/2" 12F W Gr5 Ch.7/8" Height 12,00Mm		8	12	12
10	6020310759-8	Self-Locking Nut With Nylon Upper 5/8" 11F Unc Gr5 Ch.15/16" H.19,50Mm	2			
11	6020310760-1	Hexagonal Nut 5/8" 11F Unc Gr5 Ch.1.1/16" Height 15,00Mm		4	8	8
12	6020311175-7	French Head Bolt 1/2" X 1.5/8" 12F W Gr2 Rt		8	12	12
13	5024010068-9	Smooth Washer Ø13,3 X Ø35,5 X 3,00Mm		4		
14	5024010298-3	Smooth Washer Ø17 X Ø44 X 4,75Mm(Galvanized)	2			
15	5080010465-0	Articulation Bushing 19Mm	2			

• Complete Seed Hopper

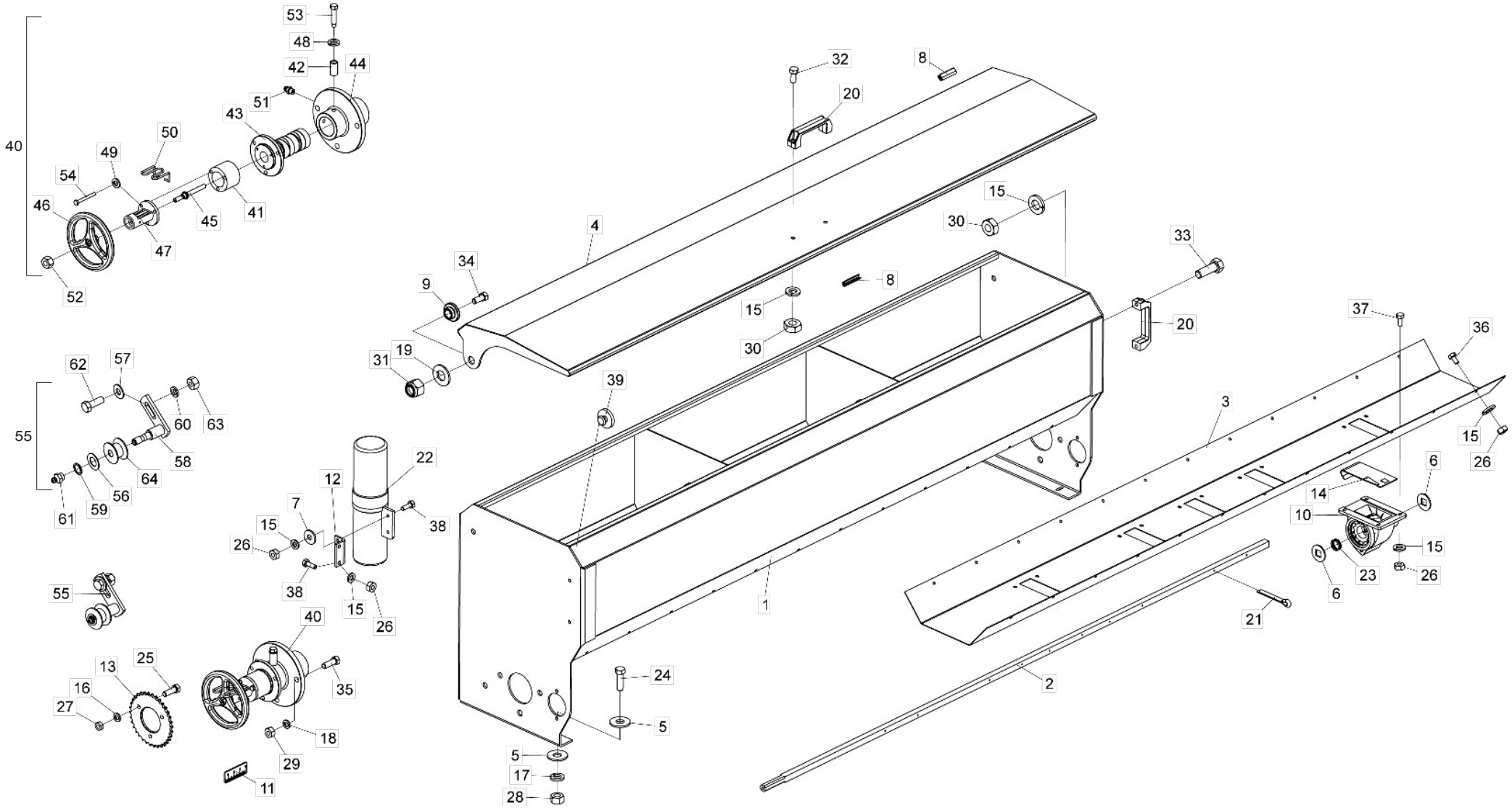

• Table Complete Seed Hopper

Item	Code	Product description	All	05 Shanks	07 Shanks	09 Shanks
1	5208011286-6	Seed Hopper For 5 Shanks		1		
1	5208011282-3	Seed Hopper For 7 Shanks			1	
1	5208011283-1	Seed Hopper For 9 Shanks				1
2	5232011860-3	Seed Hopper Shaft		1		
2	5232011861-1	Seed Hopper Shaft			1	
2	5232011862-0	Seed Hopper Shaft				1
3	5136012256-9	Lower Plate		1		
3	5136012227-5	Lower Plate			1	
3	5136012245-3	Lower Plate				1
4	5538010435-0	Cover Of Seed Hopper For 5 Shanks		1		
4	5538010433-3	Cover Of Seed Hopper For 7 Shanks			1	
4	5538010434-1	Cover Of Seed Hopper For 9 Shanks				1
5	5024010075-1	Smooth Washer Ø10,3 X Ø25 X 2,00Mm	8			
6	5024010083-2	Smooth Washer Sq.17 X Ø43 X 3,00Mm		10	14	18
7	5024010161-8	Smooth Washer Ø7 X Ø18 X 2,00Mm	2			
8	5048010025-2	Plastic Chock Absorver W/Metalic Reinforcement	5			
9	5080020484-1	Bushing Of Ø13,1 X Ø31,5 X 12,5Mm	2			
10	5092100010-0	Complete Seed Distributor Box Inclined Rotor		5	7	9
11	5136015829-6	Plate Of Adjustment Of 35 A 0Mm	1			
12	5136180360-8	Plate Of Support Of Container	1			
13	5256010088-4	Sprocket 34 Teeth	1			
14	5538130001-2	Cover Of Seed Distributor		5	7	9
15	6020010402-4	Pressure Washer 1/4" Media Industry		52	72	88
16	6020010404-0	Pressure Washer 5/16" Media Industry	3			
17	6020010406-7	Pressure Washer 3/8" Media Industry	4			
18	6020010410-5	Pressure Washer 1/2" Media Industry	3			
19	6020010432-6	Plain Inox Washer Ø13,3 X Ø27 X 2,4Mm	2			
20	6020010922-0	Nylon Stics Pmc 594 - 132 X 32 Mm	2			
21	6020050101-5	Cotterpin 1/8" X 1"		10	14	18
22	6020050642-4	Container For Instruction Manual	1			
23	6020250252-3	Compression Helical Spring Ø23 X Ø28 X 24Mm Wire=Ø2,5Mm		5	7	9
24	6020310026-7	Hexagonal Head Bolt 3/8" X 1.1/4" 16F Unc1A Gr5 Rt	4			
25	6020310038-0	Hexagonal Head Bolt 5/16" X 1" 18F Unc1A Gr5 Rt	3			
26	6020310742-3	Hexagonal Nut 1/4" 20F Unc Gr5 Ch.7/16" Height 5,50Mm		48	68	84
27	6020310744-0	Hexagonal Nut 5/16" 18F Unc Gr5 Ch.1/2" Height 6,50Mm	3			
28	6020310746-6	Hexagonal Nut 3/8" 16F Unc Gr5 Ch.9/16" Height 8,50Mm	4			

Item	Code	Product description	All	05 Shanks	07 Shanks	09 Shanks
29	6020310754-7	Hexagonal Nut 1/2" 12F W Gr5 Ch.7/8" Height 12,00Mm	3			
30	6020310767-9	Hexagonal Nut 5/16" 18F Unc Ch.1/2" H.6,50Mm	4			
31	6020310809-8	Self-Locking Nut With Nylon Upper 1/2" 12F W Gr5 Ch.3/4" H.15,50Mm	2			
32	6020310882-9	Hexagonal Head Bolt Inox 5/16" X 3/4" 18F Unc2A Rt	2			
33	6020310883-7	Hexagonal Head Bolt Inox 5/16" X 1" 18F Unc2A Rt	2			
34	6020310885-3	Hexagonal Head Bolt Inox 1/2" X 1.1/4" 12F W Rt	2			
35	6020310886-1	Hexagonal Head Bolt Inox 1/2" X 1.1/2" 12F W Rt	3			
36	6020311000-9	Hexagonal Head Bolt 1/4" X 1/2" 20F Unc1A Gr5 Rt		24	36	44
37	6020311001-7	Hexagonal Head Bolt 1/4" X 5/8" 20F Unc1A Gr5 Rt		20	28	36
38	6020311002-5	Hexagonal Head Bolt 1/4" X 3/4" 20F Unc1A Gr2 Rt	4			
39	6020390340-8	Small Cover	2			
40	5204010481-0	Left Hub Regulator Seed (Asda Multi)	1			
41	5080011520-2	Spacer Bushing Of Seed Box Asda Multi	1			
42	5080020229-6	Bushing Of Ø14 X Ø19 X 33Mm	1			
43	5204010268-0	Regulator Hub	1			
44	5204010270-1	Large Left Seed Hub	1			
45	5296010033-6	Large Spindle Of Adjustment Shaft	1			
46	5484010008-4	Fertilizer / Pasture Seed Hopper Regulator	1			
47	5484010049-1	Larger Regulator With Scale	1			
48	6020010408-3	Pressure Washer 7/16" Media Industry	1			
49	6020010433-4	Pressure Inox Washer 1/4" Media Industry	3			
50	6020010991-3	Regulator Lock	1			
51	6020130100-1	Grease Fitting 1/4"	2			
52	6020310746-6	Hexagonal Nut 3/8" 16F Unc Gr5 Ch.9/16" Height 8,50Mm	1			
53	6020311040-8	Hexagonal Head Bolt 7/16" X 2" 14F Unc1A Gr5 Rp Special	1			
54	6020312203-1	Hexagonal Head Bolt 1/4" X 2.1/2" 20F Unc Gr2 Rt	3			
55	5268010836-6	Complete Chain Stretcher	1			
56	5024010059-0	Smooth Washer Ø16,5 X Ø29 X 1,21Mm	1			
57	5024010239-8	Smooth Washer Ø16,5 X Ø37 X 3,00Mm	1			
58	5268010189-2	Spare Chain Stretcher	1			
59	6020010252-8	Retention Ring E-16 G501-016-01	1			
60	6020010412-1	Pressure Washer 5/8" Media Industry	1			
61	6020130108-7	Grease Fitting 1/8"	1			
62	6020310179-4	Hexagonal Head Bolt 5/8" X 1.3/4" 11F Unc1A Gr5 Rt	1			
63	6020310760-1	Hexagonal Nut 5/8" 11F Unc Gr5 Ch.1.1/16" Height 15,00Mm	1			
64	6020350849-5	Pulley Stretcher	1			

• Complete Fertilizer Hopper

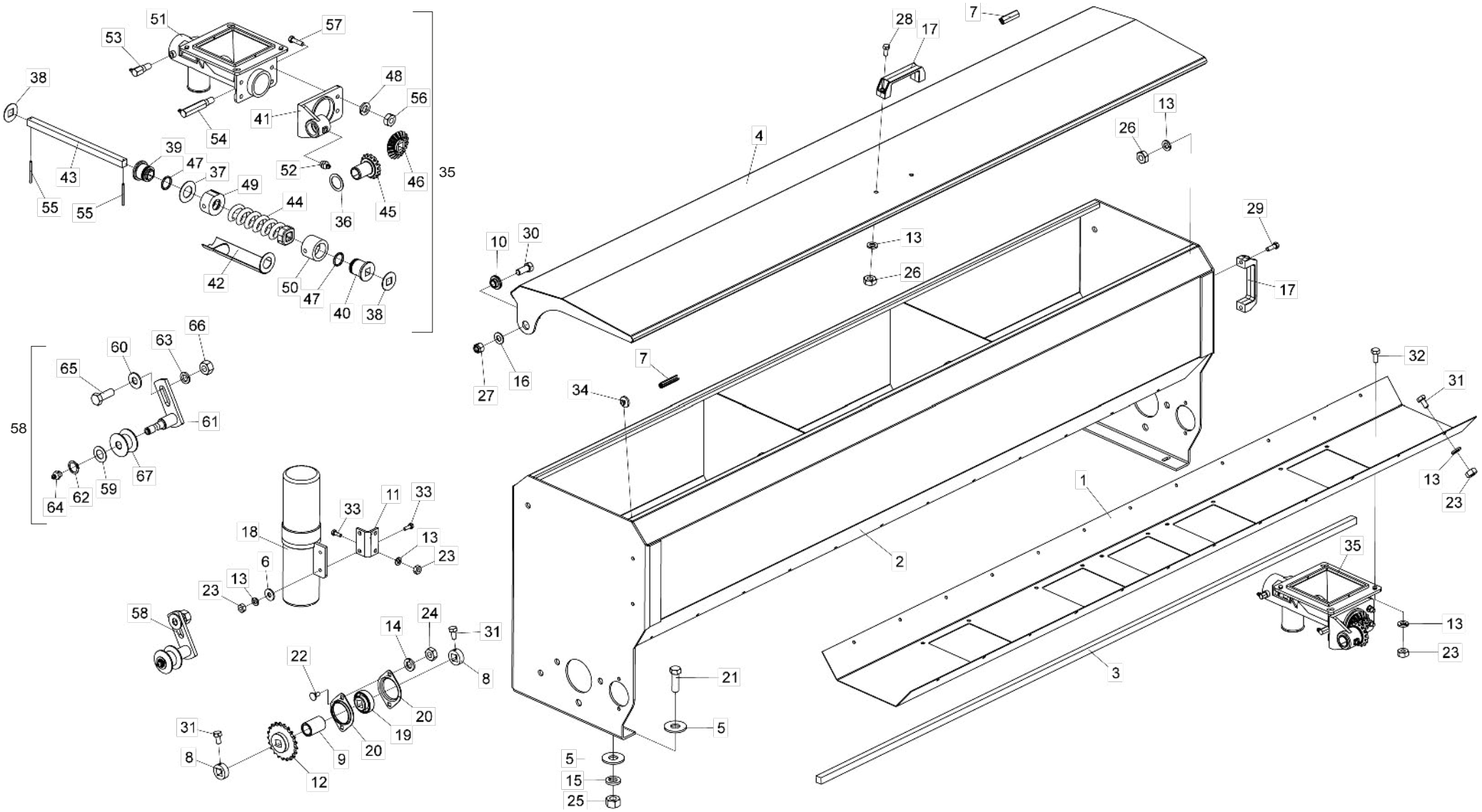

• Table Complete Fertilizer Hopper

Item	Code	Product description	All	05 Shanks	07 Shanks	09 Shanks
1	5136012531-2	Lower Plate For Fertilizer - 5 Shanks		1		
1	5136012530-4	Lower Plate For Fertilizer - 7 Shanks			1	
1	5136012583-5	Complete Lower Plate For Fertilizer - 9 Shanks				1
2	5208011286-6	Seed Hopper For 5 Shanks		1		
2	5208011282-3	Seed Hopper For 7 Shanks			1	
2	5208011283-1	Seed Hopper For 9 Shanks				1
3	5232010895-0	Fertilizer Hopper Shaft 5 Shank		1		
3	5232010896-9	Fertilizer Hopper Shaft 7 Shank			1	
3	5232010897-7	Fertilizer Hopper Shaft 9 Shank				1
4	5538010435-0	Cover Of Seed Hopper For 5 Shanks		1		
4	5538010433-3	Cover Of Seed Hopper For 7 Shanks			1	
4	5538010434-1	Cover Of Seed Hopper For 9 Shanks				1
5	5024010075-1	Smooth Washer Ø10,3 X Ø25 X 2,00Mm	8			
6	5024010161-8	Smooth Washer Ø7 X Ø18 X 2,00Mm	2			
7	5048010025-2	Plastic Chock Absorver W/Metalic Reinforcement	5			
8	5080010659-9	Bushing With Hole Sq16,7Mm For Lock Gear	2			
9	5080020392-6	Bushing Of Ø23 X Ø32 X 47Mm	1			
10	5080020484-1	Bushing Of Ø13,1 X Ø31,5 X 12,5Mm	2			
11	5136180360-8	Plate Of Support	1			
12	5256010180-5	Complete Sprocket 21 Teeth With Square Hole	1			
13	6020010402-4	Pressure Washer 1/4" Media Industry		52	72	89
14	6020010404-0	Pressure Washer 5/16" Media Industry	2			
15	6020010406-7	Pressure Washer 3/8" Media Industry	4			
16	6020010432-6	Plain Inox Washer Ø13,3 X Ø27 X 2,4Mm	2			
17	6020010922-0	Nylon Support Pmc 594 - 132 X 32 Mm	2			
18	6020050642-4	Container For Instruction Manual	1			
19	6020250117-9	Bearing Assy F-110934.1	1			
20	6020250412-7	Steel Plate Bearing 03.52 Mst	2			
21	6020310026-7	Hexagonal Head Bolt 3/8" X 1.1/4" 16F Unc1A Gr5 Rt	4			
22	6020310142-5	French Head Bolt 5/16" X 3/4" 18F Unc1A Gr2 Rp	2			
23	6020310742-3	Hexagonal Nut 1/4" 20F Unc Gr5 Ch.7/16" Height 5,50Mm		48	68	85
24	6020310744-0	Hexagonal Nut 5/16" 18F Unc Gr5 Ch.1/2" Height 6,50Mm	2			
25	6020310746-6	Hexagonal Nut 3/8" 16F Unc Gr5 Ch.9/16" Height 8,50Mm	4			
26	6020310767-9	Brass Hexagonal Nut 5/16" 18F Unc Ch.1/2" H.6,50Mm	4			
27	6020310809-8	Self-Locking Nut With Nylon Upper 1/2" 12F W Gr5 Ch.3/4" H.15,50Mm	2			
28	6020310882-9	Hexagonal Head Bolt Inox 5/16" X 3/4" 18F Unc2A Rt	2			
29	6020310883-7	Hexagonal Head Bolt Inox 5/16" X 1" 18F Unc2A Rt	2			
30	6020310885-3	Hexagonal Head Bolt Inox 1/2" X 1.1/4" 12F W Rt	2			
31	6020311000-9	Hexagonal Head Bolt 1/4" X 1/2" 20F Unc1A Gr5 Rt		26	38	46
32	6020311001-7	Hexagonal Head Bolt 1/4" X 5/8" 20F Unc1A Gr5 Rt		20	28	36
33	6020311002-5	Hexagonal Head Bolt 1/4" X 3/4" 20F Unc1A Gr2 Rt	4			
34	6020390340-8	Small Cover	2			
35	5150010012-9	Complete Right Fertilizer Distributer 25,40Mm		5	7	9
36	5024010057-3	Smooth Washer Ø29,5 X Ø41 X 1,21Mm		5	7	9
37	5024010341-6	Special Washer The Plastic Box		5	7	9
38	5024010342-4	Smooth Washer Sq.16,5 X Ø46 X 1,50Mm		15	21	27
39	5080010285-2	Small Bushing Of Fetilizer Conductor		5	7	9
40	5080010286-0	Large Bushing Of Conductor Of Fertilizer		5	7	9
41	5092010164-7	Transmission Box		5	7	9
42	5106010066-0	Fertilizer Cover		5	7	9
43	5232010526-9	Shaft Sq.5/8" X 295Mm Fertilizer		5	7	9
44	5400010113-6	Right Spiral Spring Sq.17,5 X 175 X 7,93Mm (Pace 25,4Mm)		5	7	9
45	5428010018-0	Pinion Of 16 Teeth		5	7	9
46	5428010019-9	Pinion Of 18 Teeth		5	7	9
47	6020010043-6	O´Ring 2-214 N3006-90Nbr (24,99)		10	14	18
48	6020010434-2	Pressure Washer Inox 5/16" Media		20	28	36
49	6020030083-4	Bushing O52 X 27Mm Small		5	7	9
50	6020030084-2	Bushing Ø50 X 35Mm Large		5	7	9
51	6020050381-6	Spare Fertilizer Distributor		5	7	9
52	6020130108-7	Grease Fitting 1/8"		5	7	9
53	6020130114-1	Grease Fitting 1/8"		5	7	9
54	6020130116-8	Grease Fitting 1/8"		5	7	9
55	6020310539-0	Heavy Elastic Pin Ø3 X 36Mm (Seeger Reno 701.067)		10	14	18
56	6020310767-9	Hexagonal Nut 5/16" 18F Unc Ch.1/2" H.6,50Mm		20	28	36
57	6020310884-5	Hexagonal Head Bolt Inox 5/16" X 1.1/4" 18F Unc2A Rt		20	28	36
58	5268010836-6	Complete Chain Stretcher		1		
58	5268010188-4	Complete Chain Stretcher			1	1
59	5024010059-0	Smooth Washer Ø16,5 X Ø29 X 1,21Mm	1			
60	5024010239-8	Smooth Washer Ø16,5 X Ø37 X 3,00Mm	1			
61	5268010189-2	Spare Chain Stretcher	1			
62	6020010252-8	Retention Ring E-16 G501-016-01	1			
63	6020010412-1	Pressure Washer 5/8" Media Industry	1			
64	6020130108-7	Grease Fitting 1/8"		1		
64	6020130112-5	Grease Fitting 1/8"			1	1
65	6020310179-4	Hexagonal Head Bolt 5/8" X 1.3/4" 11F Unc1A Gr5 Rt	1			
66	6020310760-1	Hexagonal Nut 5/8" 11F Unc Gr5 Ch.1.1/16" Height 15,00Mm	1			
67	6020350849-5	Pulley Stretcher	1			

• Seed And Fertilizer Tube

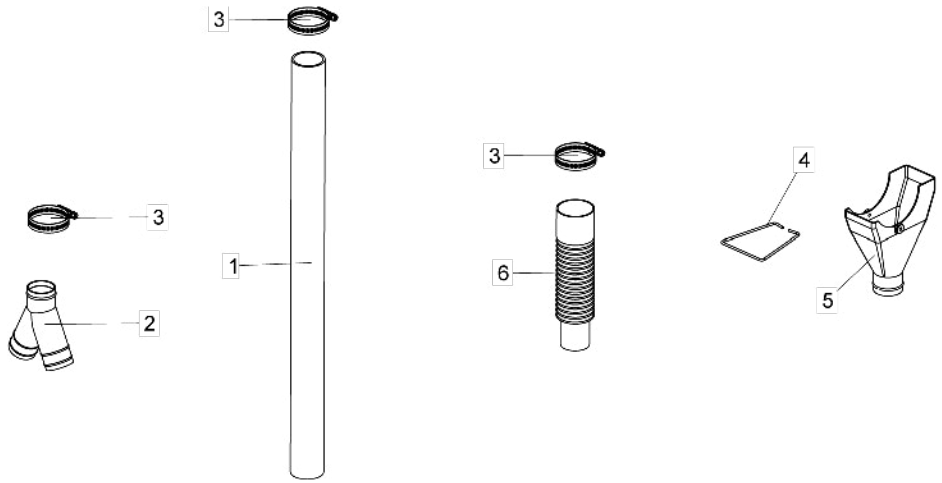

Item	Code	Product description	All	Seed	Fertilizer
1	5372010406-3	Seed and Fertilizer Tube	1		
2	6020030203-9	Funnel Type "Y"	1		
3	6020010706-6	Clamp 044 X 057 X 14.5Mm (Carbon Steel)		2	3
4	6020390309-2	Lock 100 X 84 X 03Mm (2557)		1	
5	6020190010-0	Funnel Ju-02 (N. 3823)		1	
6	6020250483-6	Hose Ø38 X Ø50,8 X 220Mm			1

• Roller With Oil or Grease Bearing

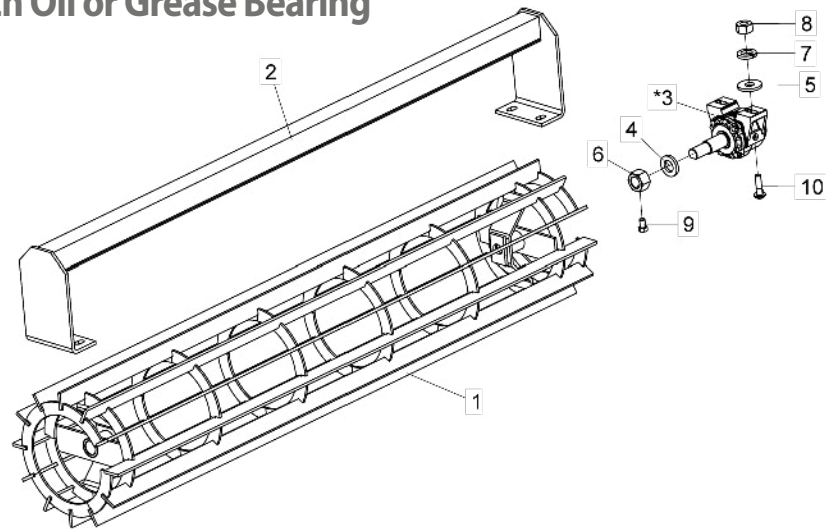

Item	Code	Product description	All	05 Shanks	07 Shanks	09 Shanks
1	5502030016-6	Levelling Roller Of 1900Mm		1		
1	5502030013-1	Levelling Roller Of 1300Mm			1	
1	5502030011-5	Levelling Roller Of 1600Mm				1
2	5530540023-7	Roller Support 1830Mm		1		
2	5530540021-0	Roller Support 1230Mm			1	
2	5530540022-9	Roller Support 1530Mm				1
*3	5368010426-0	Complete Right/Left Grease Bearing 245Mm Without Protection P/Eixo Ø1.1/2"	2			
*3	5368010424-3	Complete Right/Left Oil Bearing 245Mm Without Protection P/Eixo Ø1.1/2"	2			
4	5024010140-5	Smooth Washer Ø34 X Ø60 X 8,00Mm	2			
5	5024010298-3	Smooth Washer Ø17 X Ø44 X 4,75Mm(Galvanized)	4			
6	5456010022-4	Hexagonal Nut 1.1/4" 7F Unc Gr5 Key.2" Height.31,00Mm With Hole R.3/8"	2			
7	6020010412-1	Pressure Washer 5/8" Media Industry	4			
8	6020310760-1	Hexagonal Nut 5/8" 11F Unc Gr5 Ch.1.1/16" Height 15,00Mm	4			
9	6020311030-0	Hexagonal Head Bolt 3/8" X 5/8" 16F Unc1A Gr2 Rt	2			
10	6020312010-1	French Head Bolt 5/8" X 2.1/4" 11F Unc1A Gr5 Rp With Lock	4			

* Item 3 - See Page 18

• Bearing (Grease)

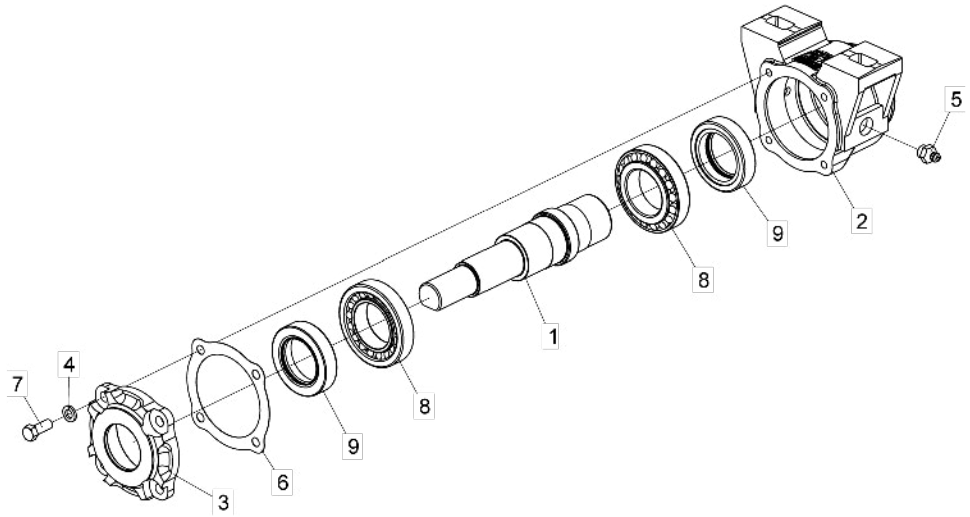

Item	Code	Product description	All
1	5232030102-5	Bushing Bearing	1
2	5368010079-5	Spare Front/Rear Grease Bearing (Without Protection)	1
3	5538010031-1	Bearing Cover	1
4	6020010406-7	Pressure Washer 3/8" Media Industry	4
5	6020130108-7	Grease Fitting 1/8"	2
6	6020190104-1	Gascket Ø90 X Ø134 X 1/64"	4
7	6020310021-6	Hexagonal Head Bolt 3/8" X 1" 16F Unc1A Gr5 Rt (Phosphated)	4
8	6020350054-0	Bearing 30210	2
9	6020350236-5	Retainer Ø49,00 X Ø76,10 X 17,50Mm (Arca 5282 Gb/ Sabo 01199 Gb)	2

• Radial Bearing (Oil)

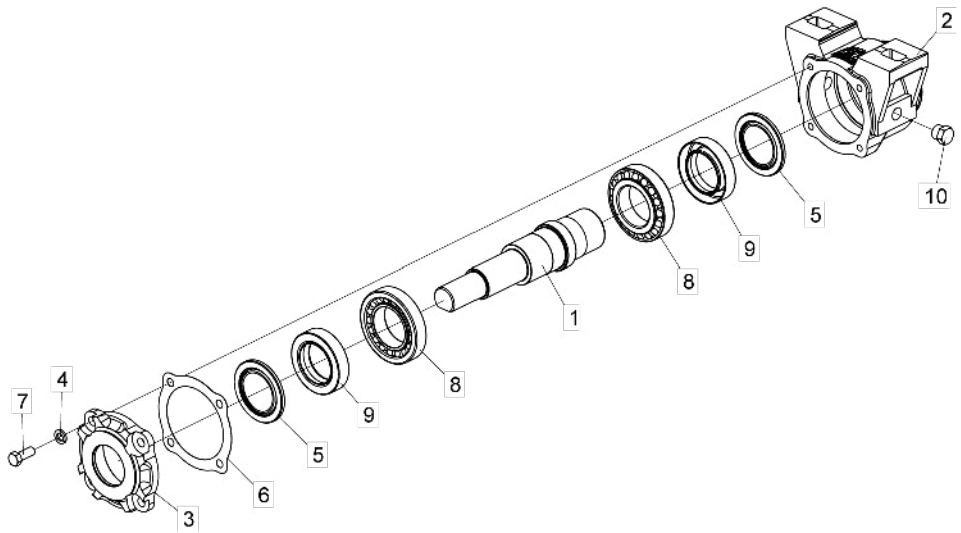

Item	Code	Product description	All
1	5232030102-5	Bushing Bearing	1
2	5368010077-9	Spare Front/Rear Oil Bearing (Without Protection	1
3	5538010031-1	Bearing Cover	1
4	6020010406-7	Pressure Washer 3/8" Media Industry	4
5	6020010472-5	Washer 1199(Joinseal)-1002(Arca)	2
6	6020190104-1	Gascket Ø90 X Ø134 X 1/64"	4
7	6020310021-6	Hexagonal Head Bolt 3/8" X 1" 16F Unc1A Gr5 Rt (Phosphated)	4
8	6020350054-0	Bearing 30210	2
9	6020350291-8	Retainer Ø49,00 X Ø76,00 X 17,50Mm (Arca 5304 Brg)	2
10	5081010007-6	Hexagonal Head Plug 3/4" - R.3/8" - 19F - Bspt(Gas)	2

• Hydraulic Trasmission System

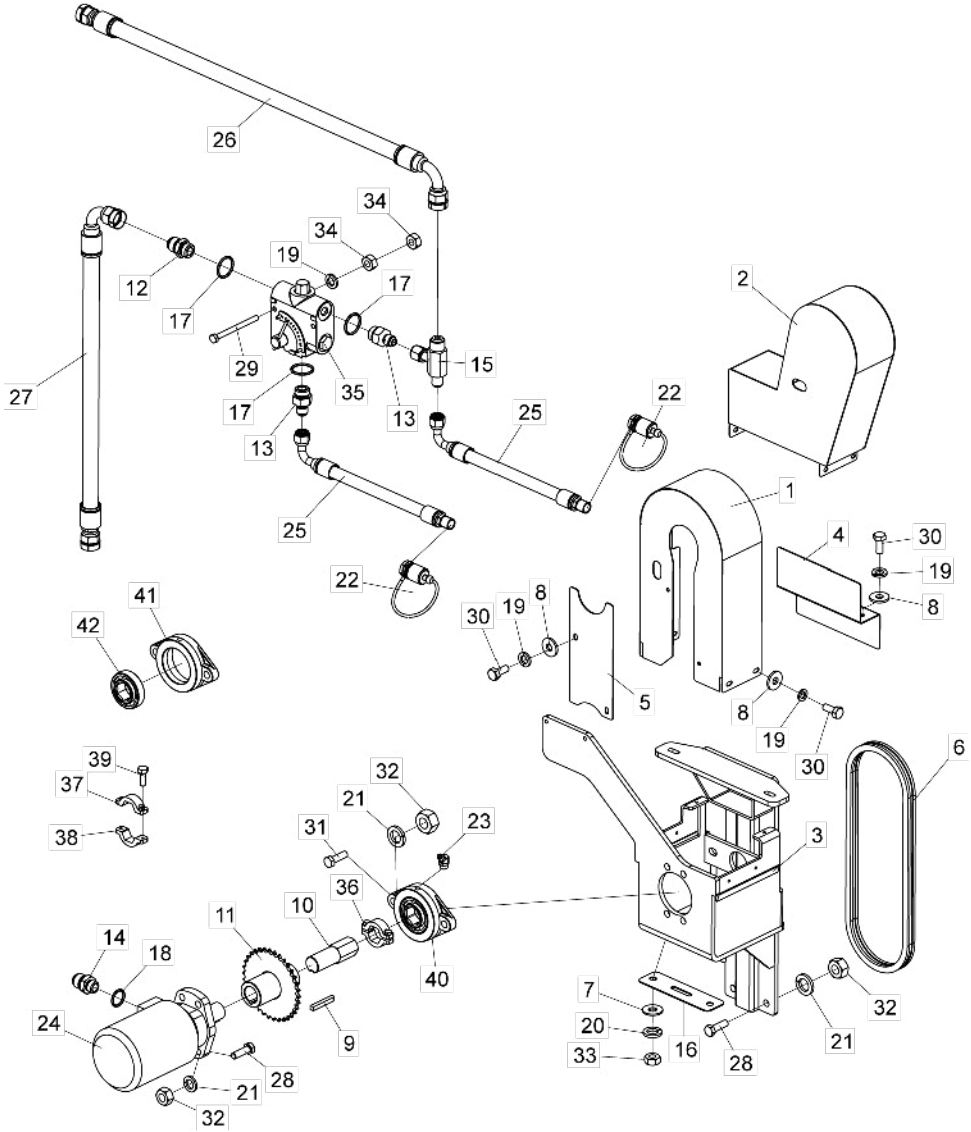

Item	Code	Product description	All	Seed	Fertilizer
1	5464010406-9	Chain Protection		1	
2	5464010407-7	Protection Asda Multi With Fertilizer System			1
3	5530015902-7	Right Support Of Hopper (Hydraulic Transmission)		1	
3	5530015915-9	Right Support Of Hopper W/Fertilizer System (Hydraulic Transmission)			1
4	5538010588-7	Protection Cover		1	
4	5538010593-3	Protection Cover W/Fertilizer System			1
5	5538010589-5	Protection Cover		1	
6	6020050076-0	Chain (Asa 40) 84 Links + Reduction		1	
6	6020050285-2	Chain (Asa 40) 126 Links + Reduction			1
7	5024010075-1	Smooth Washer Ø10,3 X Ø25 X 2,00Mm	2		
8	5024010161-8	Smooth Washer Ø7 X Ø18 X 2,00Mm		8	6
9	5140010033-4	Cotter Sq.5/16" X 57,9Mm	1		
10	5232011832-8	Transmission Shaft	1		
11	5256010412-0	Complete Gear 34 Teeth	1		
12	5412010004-4	Nipple R.1.1/16" Un X R.1.1/16" Un X 50Mm Hexagonal 1.1/4"	1		
13	5412010144-0	Nipple R.1/2" Bsp X R.1.1/16" Un X 55Mm Hexagonal 1.1/4"	2		
14	5412010203-9	Nipple Ø1.1/16" Un X Ø7/8" Unf X 50Mm Hexagonal 1.1/4"	2		
15	5412010222-5	Type Nipple "T" With Rotary Nut For Hose Ø1/2" E Ø3/4"	1		
16	5464010535-9	Lower Protection of Support	1		
17	6020010024-0	O´Ring 2-119 N3006-90Nbr (23,47)	3		
18	6020010060-6	O´Ring 6-040 N3006-90Nbr (18,00)	2		
19	6020010122-0	Pressure Washer M6 Media		10	8
20	6020010394-0	Pressure Washer M10 Media	2		
21	6020010395-8	Pressure Washer M12 Media	10		
22	6020090404-7	Quickly Coupling Male 1/2"	2		
23	6020130110-9	Grease Fitting 1/8"	1		
24	6020250418-6	Hydraulic Motor Tf0280Ms030-Aaaa	1		
25	6020250902-1	High Pressure Hydraulic Hose 1/2" X 5000Mm With 1Tcg And 1Trf (Sae 100R2 At - P.T.4000Psi)	2		
26	6020251339-8	High Pressure Hydraulic Hose 3/4" X 800Mm With 1Tcg And 1Trg (Sae 100R2 At - P.T.3100Psi)	1		
27	6020251350-9	High Pressure Hydraulic Hose 3/4" X 600Mm With 1Tcg And 1Trg (Sae 100R2 At - P.T.3100Psi)	1		
28	6020310152-2	Hexagonal Head Bolt M12 X 1,75 X 40Mm Cl8.8 Rp		10	8
29	6020310290-1	Hexagonal Head Bolt M6 X 1,00 X 75Mm Cl8.8 Rt	2		
30	6020310291-0	Hexagonal Head Bolt M6 X 1,00 X 15Mm Cl8.8 Rt		8	6
31	6020310363-0	Hexagonal Head Bolt Inox M12 X 1,75 X 45Mm Ma Rt			2
32	6020310820-9	Hexagonal Nut M12 X 1,75 Ma Cl8 Ch.19Mm H.10,00Mm	10		
33	6020310822-5	Hexagonal Nut M10 X 1,50 Ma Cl8 Ch.17Mm H.8,00Mm	2		
34	6020311257-5	Hexagonal Nut M6 X 1,00 Ma Cl8 Ch.10Mm H.5,00Mm	4		
35	6020430221-1	Flow Controler Valve - Cfq-A12	1		
36	5460010007-9	Complete Shaft Of Clamp	1		
37	5460010003-6	Shaft Clamp Hexagonal 1.1/4" With Hole	1		
38	5460010004-4	Shaft Clamp Hexagonal 1.1/4" Hole	1		
39	6020310016-0	Hexagonal Head Bolt 1/4" X 3/4" 20F Unc1A Gr5 Rt	1		
40	5368010500-2	Complete Sleeve Bearing With Self Compensationr F-11094 For Hexagonal Shaft Of 1.1/4"	1		
41	6020250419-4	Cast Iron Bearing Type Flange Cjt-07 With Fitting Grease 1/8" 28F (Frm)	1		
42	6020250116-0	Bearing F-110949	1		

• Stickers

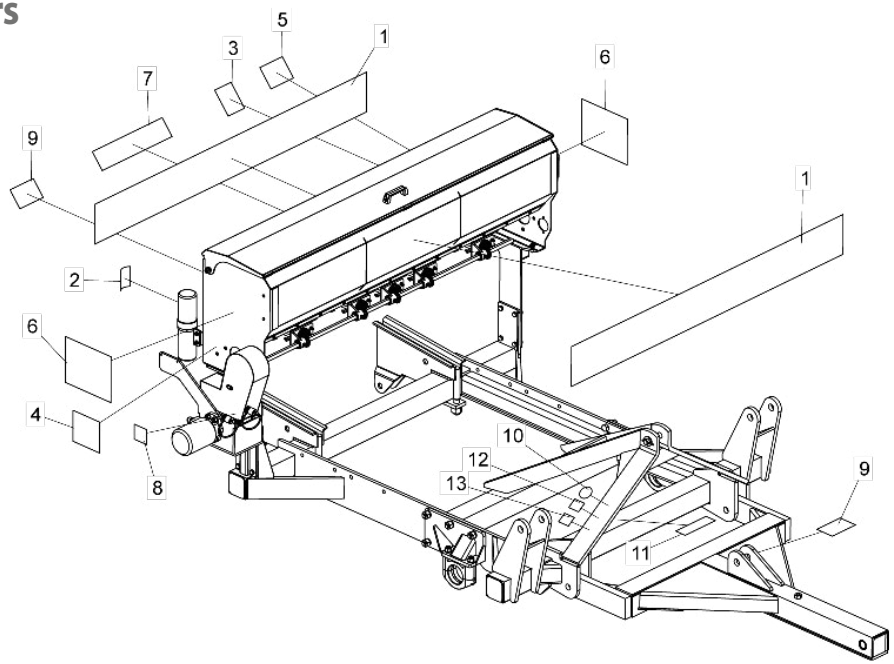

Item	Code	Product description	All	05 Shanks	07 Shanks	09 Shanks
1	6020070853-1	Sticker Asda Multi (1750 X 200Mm)		2		
1	6020070820-5	Sticker Asda Multi (2490 X 200Mm)			2	
1	6020070843-4	Sticker Asda "Multi" (3230 X 200Mm)				2
2	5206010221-0	Sticker Instruction Manual Warning (100 X 160Mm)	1			
3	5206010278-3	Sticker For Cleaning The Fertilizer Hopper (105 X 130Mm)	1			
4	5206010307-0	Sticker Of Gear And Chains Warning (145 X 150Mm)	1			
5	5206010309-7	Sticker Plateform Warning (107 X 145Mm)	1			
6	6020070790-0	Sticker Logotype Baldan (230 X 280Mm)	2			
7	6020071997-5	Sticker Seed Distribution Table Asda Multi (100X555Mm)	1			
7	6020072035-3	Sticker Fertilizer Distribution Table Asda Multi (Hydraulic Motor) (95X350Mm)	1			
8	6020071996-7	Sticker Lubrication (75 X 75Mm)	1			
9	5206010310-0	Sticker Disc Warning (150 X 95Mm)	2			
10	5206010317-8	Sticker "Ok" Approved Quality Control	1			
11	6020070886-8	Sticker Lubricate And Retighten (58 X 195Mm)	1			
12	6020071026-9	Sticker Brazilian Company(48 X 60Mm)	1			
13	6020071027-7	Sticker Certificado Iso 9001-2008 (48 X 60Mm)	1			

Item 1

Item 2

Item 3

Item 4

Item 5

Item 6

Item 7

Item 1

Item 1

Item 7

Item 8

Item 9

Item 10

Item 11

Item 12

Item 13

Numerical Index

Code	Page	Item	Code	Page	Item	Code	Page	Item	Code	Page	Item	Code	Page	Item	Code	Page	Item	Code	Page	Item	Code	Page	Item
2861427388-9	7	7	5124010198-3	6	*1	5232011861-1	14	2	5440010802-4	5	*7	5538010435-0	14	4	6020050116-3	5	36	6020310016-0	19	39	6020310804-7	11	7
5024010007-7	7	27	5124010624-1	5	*20	5232011862-0	14	2	5440010803-2	5	*7	5538010435-0	16	4	6020050116-3	10	11	6020310021-6	18	7	6020310809-8	14	31
5024010039-5	5	18	5136012227-5	14	3	5232030102-5	18	1	5456010022-4	6	4	5538010588-7	19	4	6020050285-2	19	6	6020310021-6	18	7	6020310809-8	16	27
5024010039-5	5	45	5136012233-0	12	1	5232030102-5	18	1	5456010022-4	17	6	5538010589-5	19	5	6020050356-5	5	53	6020310026-7	14	24	6020310816-0	9	10
5024010039-5	9	5	5136012245-3	14	3	5232030120-3	7	30	5456050001-0	11	5	5538010593-3	19	4	6020050362-0	5	62	6020310026-7	16	21	6020310820-9	19	32
5024010057-3	16	36	5136012248-8	12	1	5232030133-5	7	3	5460010003-6	19	37	5538130001-2	14	14	6020050381-6	16	51	6020310038-0	14	25	6020310822-5	19	33
5024010059-0	14	56	5136012256-9	14	3	5236010001-4	11	3	5460010004-4	19	38	5558040023-9	5	34	6020050642-4	14	22	6020310142-5	16	22	6020310882-9	14	32
5024010059-0	16	59	5136012257-7	12	1	5256010088-4	14	13	5460010007-9	19	36	5566010028-7	7	6	6020050642-4	16	18	6020310152-2	19	28	6020310882-9	16	28
5024010061-1	5	19	5136012530-4	16	1	5256010180-5	16	12	5464010406-9	19	1	6010600980-8	7	15	6020055720-7	11	*3	6020310179-4	14	62	6020310883-7	14	33
5024010061-1	5	46	5136012531-2	16	1	5256010412-0	19	11	5464010407-7	19	2	6010601523-9	6	3	6020070790-0	20	6	6020310179-4	16	65	6020310883-7	16	29
5024010061-1	6	2	5136012583-5	16	1	5259010018-8	12	3	5464010535-9	19	16	6020010024-0	19	17	6020070820-5	20	1	6020310180-8	12	8	6020310884-5	16	57
5024010068-9	12	13	5136015829-6	14	11	5268010188-4	16	58	5484010008-4	14	46	6020010043-6	16	47	6020070843-4	20	1	6020310237-5	10	14	6020310885-3	14	34
5024010075-1	14	5	5136180360-8	14	12	5268010189-2	14	58	5484010029-7	9	1	6020010060-6	19	18	6020070853-1	20	1	6020310245-6	10	15	6020310885-3	16	30
5024010075-1	16	5	5136180360-8	16	11	5268010189-2	16	61	5484010049-1	14	47	6020010122-0	19	19	6020070886-8	20	11	6020310248-0	6	6	6020310886-1	14	35
5024010075-1	19	7	5138010005-7	5	22	5268010836-6	14	55	5484010079-3	9	2	6020010252-8	14	59	6020071026-9	20	12	6020310252-9	10	16	6020310998-1	9	11
5024010083-2	14	6	5138050005-5	5	23	5268010836-6	16	58	5484010119-6	5	*8	6020010252-8	16	62	6020071027-7	20	13	6020310290-1	19	29	6020311000-9	14	36
5024010093-0	10	22	5138050010-1	5	24	5284010001-4	7	8	5484040047-9	9	3	6020010394-0	19	20	6020071996-7	20	8	6020310291-0	19	30	6020311000-9	16	31
5024010140-5	17	4	5140010033-4	19	9	5296010033-6	14	45	5498100005-9	5	50	6020010395-8	19	21	6020071997-5	20	7	6020310363-0	19	31	6020311001-7	14	37
5024010154-5	8	12	5144010301-8	11	1	5326010068-4	10	3	5498100072-5	5	59	6020010402-4	14	15	6020072035-3	20	7	6020310406-8	5	52	6020311001-7	16	32
5024010161-8	14	7	5150010012-9	16	35	5326010439-6	5	*2	5502010070-1	5	*48	6020010402-4	16	13	6020090404-7	19	22	6020310413-0	5	61	6020311002-5	14	38
5024010161-8	16	6	5150010027-7	5	*25	5326010454-0	11	2	5502010071-0	5	*48	6020010404-0	14	16	6020130100-1	6	5	6020310421-1	5	38	6020311002-5	16	33
5024010161-8	19	8	5150010036-6	5	*25	5332020007-1	6	3	5502010072-8	5	*48	6020010404-0	16	14	6020130100-1	7	26	6020310472-6	7	17	6020311020-3	9	4
5024010192-8	5	54	5152010010-9	11	4	5348050006-3	5	26	5502030011-5	17	1	6020010406-7	7	24	6020130100-1	10	12	6020310510-2	7	16	6020311029-7	7	23
5024010239-8	14	57	5196010183-2	12	2	5348050009-8	5	27	5502030013-1	17	1	6020010406-7	14	17	6020130100-1	14	51	6020310539-0	16	55	6020311030-0	6	7
5024010239-8	16	60	5196010184-0	12	2	5368010077-9	18	2	5502030016-6	17	1	6020010406-7	16	15	6020130108-7	5	15	6020310559-5	8	7	6020311030-0	17	9
5024010289-4	7	11	5196010185-9	12	2	5368010079-5	18	2	5528010670-3	5	*9	6020010406-7	18	4	6020130108-7	7	33	6020310691-5	7	18	6020311040-8	14	53
5024010298-3	12	14	5204010063-6	9	8	5368010313-1	8	14	5528010687-8	5	*9	6020010406-7	18	4	6020130108-7	8	6	6020310738-5	6	8	6020311043-2	6	5
5024010298-3	17	5	5204010088-1	7	29	5368010315-8	8	13	5528010689-4	5	*9	6020010408-3	14	48	6020130108-7	9	9	6020310742-3	14	26	6020311082-3	6	4
5024010323-8	11	6	5204010268-0	14	43	5368010416-2	8	11	5528010840-4	5	*10	6020010410-5	5	13	6020130108-7	9	4	6020310742-3	16	23	6020311087-4	7	20
5024010341-6	16	37	5204010270-1	14	44	5368010424-3	17	*3	5528010841-2	5	*10	6020010410-5	10	9	6020130108-7	10	13	6020310744-0	14	27	6020311096-3	8	10
5024010342-4	16	38	5204010481-0	14	40	5368010426-0	17	*3	5530010428-1	5	11	6020010410-5	12	6	6020130108-7	14	61	6020310744-0	16	24	6020311102-1	10	20
5040010126-1	7	5	5204020099-1	7	28	5368010500-2	19	40	5530010429-0	5	56	6020010410-5	14	18	6020130108-7	16	52	6020310746-6	7	25	6020311103-0	5	41
5040010127-0	7	4	5204060025-6	9	7	5372010406-3	17	1	5530010953-4	6	2	6020010412-1	6	6	6020130108-7	16	64	6020310746-6	14	28	6020311175-7	12	12
5040120970-8	5	55	5206010221-0	20	2	5372011044-6	11	2	5530011140-7	9	1	6020010412-1	7	21	6020130108-7	18	5	6020310746-6	14	52	6020311257-5	19	34
5040120971-6	5	21	5206010278-3	20	3	5400010110-1	10	4	5530011141-5	8	*2	6020010412-1	12	7	6020130110-9	19	23	6020310746-6	16	25	6020312001-2	5	17
5048010025-2	14	8	5206010307-0	20	4	5400010113-6	16	44	5530011142-3	9	1	6020010412-1	14	60	6020130112-5	16	64	6020310754-7	5	16	6020312010-1	17	10
5048010025-2	16	7	5206010309-7	20	5	5404010813-3	5	*3	5530011143-1	8	*2	6020010412-1	16	63	6020130114-1	16	53	6020310754-7	10	17	6020312203-1	14	54
5054010003-6	10	1	5206010310-0	20	9	5404010814-1	8	1	5530011144-0	9	1	6020010412-1	17	7	6020130116-8	16	54	6020310754-7	12	9	6020317431-7	10	21
5072010059-0	5	49	5206010317-8	20	10	5404010834-6	5	*3	5530011145-8	8	*2	6020010414-8	5	35	6020190010-0	17	5	6020310754-7	14	29	6020350020-6	7	34
5080010285-2	16	39	5208011280-7	5	*1	5404010835-4	8	1	5530011146-6	8	3	6020010414-8	7	12	6020190067-3	11	9	6020310759-8	12	10	6020350054-0	18	8
5080010286-0	16	40	5208011282-3	14	1	5404010836-2	5	*3	5530011147-4	8	4	6020010414-8	8	5	6020190104-1	18	6	6020310760-1	5	39	6020350054-0	18	8
5080010465-0	12	15	5208011282-3	16	2	5404010837-0	8	1	5530011483-0	10	7	6020010418-0	10	10	6020190104-1	18	6	6020310760-1	6	7	6020350056-7	9	12
5080010659-9	16	8	5208011283-1	14	1	5412010004-4	19	12	5530011484-8	10	8	6020010420-2	5	57	6020250116-0	19	42	6020310760-1	7	22	6020350080-0	9	13
5080011520-2	14	41	5208011283-1	16	2	5412010144-0	19	13	5530011637-9	12	4	6020010432-6	14	19	6020250117-9	16	19	6020310760-1	12	11	6020350201-2	7	31
5080020229-6	14	42	5208011285-8	5	*1	5412010203-9	19	14	5530011639-5	5	12	6020010432-6	16	16	6020250252-3	14	23	6020310760-1	14	63	6020350224-1	9	14
5080020392-6	16	9	5208011286-6	14	1	5412010222-5	19	15	5530011640-9	12	5	6020010433-4	14	49	6020250281-7	7	14	6020310760-1	16	66	6020350236-5	18	9
5080020484-1	14	9	5208011286-6	16	2	5428010018-0	16	45	5530015902-7	19	3	6020010434-2	16	48	6020250348-1	5	37	6020310760-1	17	8	6020350291-8	18	9
5080020484-1	16	10	5208011288-2	5	*1	5428010019-9	16	46	5530015915-9	19	3	6020010472-5	18	5	6020250412-7	16	20	6020310761-0	8	8	6020350397-3	5	60
5080020661-5	7	9	5208012842-8	5	*1	5432010025-1	5	28	5530060001-7	5	33	6020010706-6	17	3	6020250418-6	19	24	6020310767-9	14	30	6020350402-3	5	51
5080020761-1	7	32	5208012843-6	5	*1	5432090298-6	10	5	5530520076-9	7	1	6020010922-0	14	20	6020250419-4	19	41	6020310767-9	16	26	6020350849-5	14	64
5080020762-0	7	2	5208012844-4	5	*1	5432090309-5	10	6	5530540021-0	17	2	6020010922-0	16	17	6020250483-6	17	6	6020310767-9	16	56	6020350849-5	16	67
5081010007-6	18	10	5226010019-0	11	1	5432120021-7	5	4	5530540022-9	17	2	6020010991-3	14	50	6020250739-8	11	4	6020310770-9	5	40	6020390042-5	11	8
5084040107-0	6	1	5228010020-0	10	2	5432120022-5	5	29	5530540023-7	17	2	6020030083-4	16	49	6020250796-7	11	4	6020310770-9	7	13	6020390293-2	5	42
5084040109-7	5	*47	5232010526-9	16	43	5432120029-2	5	5	5538010031-1	18	3	6020030084-2	16	50	6020250902-1	19	25	6020310770-9	8	9	6020390301-7	5	43
5092010164-7	16	41	5232010895-0	16	3	5432120040-3	5	30	5538010031-1	18	3	6020030203-9	17	2	6020250913-7	11	4	6020310770-9	10	18	6020390308-4	5	44
5092100010-0	14	10	5232010896-9	16	3	5432120090-0	5	31	5538010433-3	14	4	6020050808-7	19	6	6020251004-6	11	4	6020310774-1	10	19	6020390309-2	17	4
5096010028-7	7	10	5232010897-7	16	3	5432120108-6	5	32	5538010433-3	16	4	6020050101-5	14	21	6020251013-5	11	4	6020310778-4	5	58	6020390340-8	14	39
5096020004-4	9	6	5232011832-8	19	10	5432120117-5	5	6	5538010434-1	14	4	6020050102-3	9	2	6020251339-8	19	26	6020310784-9	7	19	6020390340-8	16	34
5106010066-0	16	42	5232011860-3	14	2	5440010801-6	5	*7	5538010434-1	16	4	6020050116-3	5	14	6020251350-9	19	27	6020310800-4	9	3	6020430221-1	19	35

Baldan Implementos Agrícolas S/A.

Avenida Baldan, 1500 | Nova Matão
Zip Code: 15993-000 | Matão/SP. | Brasil
Phone: +55 (16) 3221-6500
www.baldan.com.br
sac@baldan.com.br | export@baldan.com.br