Parts Catalog

PLB DIRECTA

Baldan Line Seeder

BALDAN

Index

PLB Directa 4
Table PLB Directa 5
Row Planter 6
Row Planter W/ Iron Wheel Without Fertilizer Box 7
Row Planter W/ Iron Wheel W/ Fertilizer Box 7
Row Planter W/ Rubber Wheel Without Fertilizer Box - Optional 8
Row Planter W/ Rubber Wheel W/ Fertilizer Box - Optional 8
Row Planter W/ Compactation Wheel Without Fertilizer Box 9
Table Row Planter W/ Compactation Wheel Without Fertilizer Box 10
Row Planter W/ Compactation Wheel W/ Fertilizer Box 11
Table Row Planter W/ Compactation Wheel W/ Fertilizer Box 12
Complete Fertilizer Box 13
Complete Rubber Compactation Wheel - Optional 14
Hydraulic Cylinder of Row Marker 14
Seed Box 15
Row Planter Titanium - Optional 16
Table Row Planter Titanium - Optional 17
Complete Lower Chain Protection 18
Proteção de Corrente Superior Completa 18
Distributor Base Seed - Titanium 19
Fertilizer Box Support - Titanium 20
Hydraulic System For Row Marker - Optional 21
Complete Cover Disc 22
Complete Depth Wheel 22
Double Disc (Fertilizer) 23
Double Disc (Seed) 24
Cutting Disc 25
Furrower W/ Complete Support 26
Support W/Point 26
Seed Distributor Disc 27
Peanut Seed Kit 28
Sprockets 28
Furrower Without Support For Fertilizer Conductor - Optional 29
Furrower With Support For Fertilizer Conductor - Optional 29
Stickers 30

BALDAN

• PLB Directa

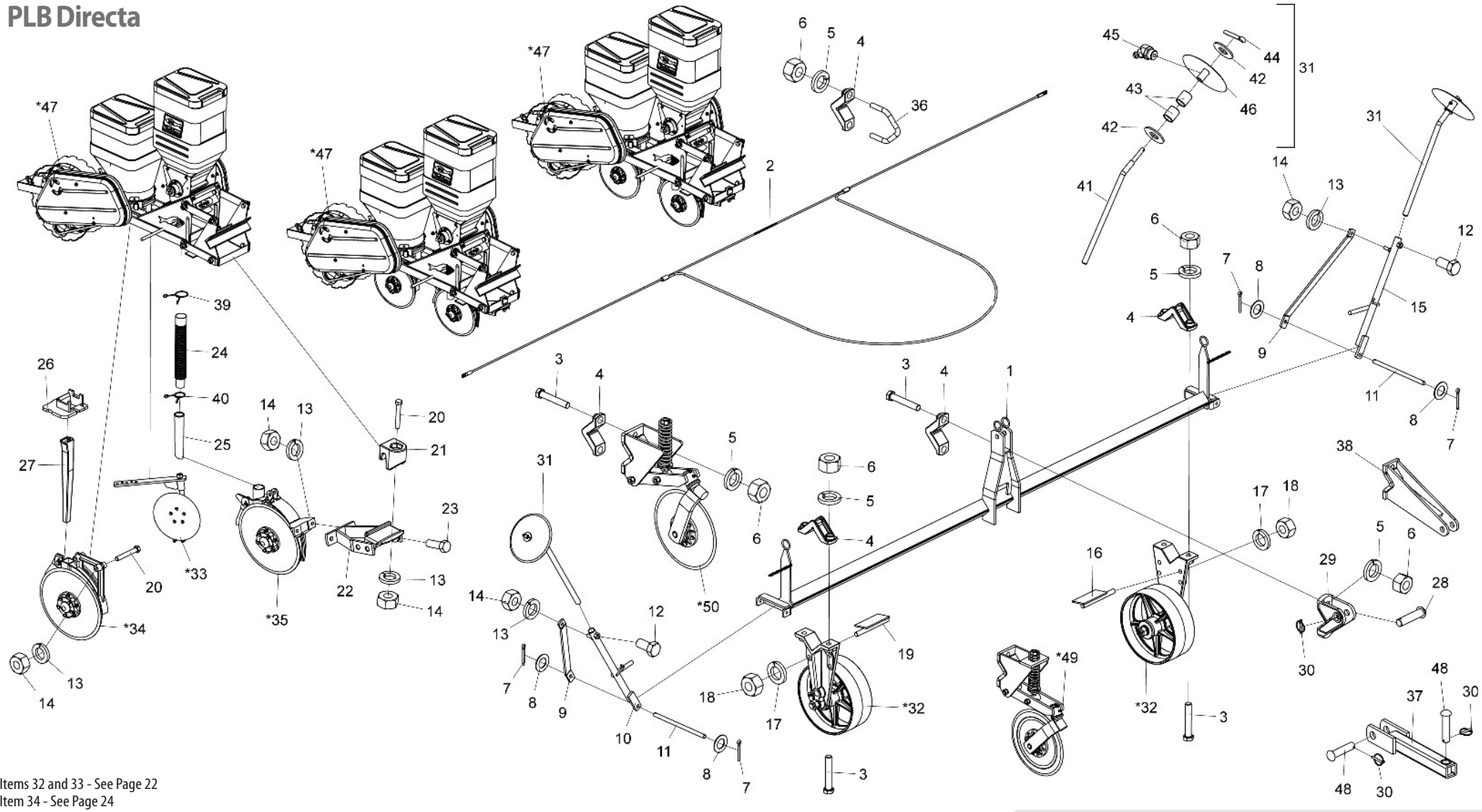

* Items 32 and 33 - See Page 22
* Item 34 - See Page 24
* Item 35 - See Page 23
* Item 47 - See Page 7
* Items 48 and 49 - See Page 25

Illustrative images

Note: Items 33, 34, 35 and the items they make up are on page 6 (Full Line)

Note: When the product comes out with Cutting Disc, items 37 and 38 will accompany it.

• Table PLB Directa

Item	Código	Descrição de produto	Todos	PLB 2 Linhas	PLB 3 Linhas	PLB 4 Linhas	PLB 5 Linhas	PLB 6 Linhas
1	5084050007-9	Tool Bar Of 1800Mm		1	1			
1	5084010022-4	Tool Bar Of 2300Mm			1			
1	5084050008-7	Tool Bar Of 2800Mm		1	1	1	1	1
1	5084010023-2	Tool Bar Of 3300Mm				1		
1	5084050009-5	Tool Bar Of 3800Mm		1	1	1	1	1
1	5084010105-0	Tool Bar Of 4396Mm				1	1	1
2	6020058441-7	Complete Hope For Drawbar 1800Mm		1	1			
2	6020058438-7	Complete Hope For Drawbar 2300Mm			1			
2	6020058442-5	Complete Hope For Drawbar 2800Mm		1	1	1	1	1
2	6020058443-3	Complete Hope For Drawbar 3300Mm				1		
2	6020058439-5	Complete Hope For Drawbar 3800Mm		1	1	1	1	1
2	6020058440-9	Complete Hope For Drawbar 4400Mm				1	1	1
3	6020310352-5	Hexagonal Head Bolt M20 X 2,50 X 110Mm Cl8.8 Rp	4					
4	6010600770-8	Clamp		8	10	12	14	16
5	6020010403-2	Pressure Washer M20 Media		8	10	12	14	16
6	6020311265-6	Hexagonal Nut M20 - 2,50 Ma Cl8 Ch30mm Alt16mm		8	10	12	14	16
7	6020050101-5	Cotterpin 1/8" X 1"	4					
8	5024010059-0	Smooth Washer Ø16,5 X Ø29 X 1,21Mm	4					
9	5136120010-5	Lateral Plate Of Row Marker	2					
10	5436012318-1	Right Support Of Row Marker	1					
11	5432010024-3	Pin Of Ø5/8" X 275Mm	2					
12	6020310279-0	Hexagonal Head Bolt M16 X 2,00 X 40Mm Cl8.8 Rt Wth Point	2					
13	6020010395-8	Pressure Washer M12 Media		12	17	22	27	32
14	6020310820-9	Hexagonal Nut M12 X 1,75 Ma Cl8 Ch.19Mm H.10,00Mm		12	17	22	27	32
15	5436012319-0	Left Support Of Row Marker	1					
16	5352010072-1	Left Scraper Of Wheel	1					
17	6020010124-6	Pressure Washer M16 Media	2					
18	6020310818-7	Hexagonal Nut M16 X 2,00 Ma Cl8 Ch.24Mm H.13,00Mm	2					
19	5352010071-3	Right Scraper Of Wheel	1					
20	6020317495-3	Hexagonal Head Bolt M12 X 1,75 X 90Mm Cl8.8 Rp		5	9	12	15	18
21	6010600896-8	Hitch Lock Of Discs Support		2	3	4	5	6
22	5530180062-1	Support Of Front Double Disc		2	3	4	5	6
23	6020310152-2	Hexagonal Head Bolt M12 X 1,75 X 40Mm Cl8.8 Rp		4	6	8	10	12
24	6020250111-0	Rubber Tube Ø38 X Ø50,8 X 400Mm		2	3	4	5	6
25	6020250048-2	Fertilizer Funnel (2448) C/Recorte 205Mm		2	3	4	5	6
26	6010601101-2	Plastic Nozzle Support		2	3	4	5	6
27	6020030123-7	Square Funnel 385Mm		2	3	4	5	6
28	5432120108-6	French Head Pin Ø28 X 105Mm	2					

Item	Código	Descrição de produto	Todos	PLB 2 Linhas	PLB 3 Linhas	PLB 4 Linhas	PLB 5 Linhas	PLB 6 Linhas
29	6010601041-5	Tool Bar Hitch	2					
30	6020390293-2	Lock Ø5,75 X 40Mm	4					
31	5386010001-7	Row Marker	2					
*32	5498010272-9	Depth Wheel	2					
*33	5220040001-1	Cover Disc		2	3	4	5	6
*34	5124030118-4	Double Disc For Seed (Conv.) Ø13" X 2,65Mm		2	3	4	5	6
*35	5124030110-9	Double Disc		2	3	4	5	6
36	5068060004-7	Clamp R3/4" Unc		4	6	8	10	12
37	5272010015-0	Extension Of Cutting Disc	1					
38	5252010040-7	Tool Bar Hitch	2					
39	6020250339-2	Lock Spring		2	3	4	5	6
40	6020250322-8	Lock Spring		2	3	4	5	6
41	5232020035-0	Row Marker Shaft	2					
42	5024010142-1	Smooth Washer Ø20,3 X Ø46,5 X 3,00Mm	4					
43	5080020830-8	Bushing Of Ø19,2 X Ø23,2 X 25,50Mm	4					
44	6020050113-9	Cotterpin 1/4" X 1.1/4"	2					
45	6020130110-9	Grease Fitting 1/8"	2					
46	5220040003-8	Complete Row Marker Disc	2					
*47	5124010521-0	Row Planter With Iron Compactation Wheel - Conv. Planting Without Fertilizer Box	-					
*47	5124010593-8	Row Planter With Iron Compactation Wheel - No Till Planting Without Fertilizer Box	-					
*47	5124010523-7	Row Planter With Iron Compactation Wheel - Conventional Planting	-					
*47	5124010527-0	Row Planter With Iron Compactation Wheel - No Till Planting	-					
*47	5124010520-2	Row Planter With Rubber Compactation Wheel - Conv. Planting Without Fertilizer Box	-					
*47	5124010522-9	Row Planter With Rubber Compactation Wheel - Conventional Planting	-					
*47	5124010526-1	Row Planter With Rubber Compactation Wheel - No Till Planter	-					
48	6020310595-1	French Head Pin Ø1 X 105mm	2					
		Optional						
*49	5124010318-8	Complete Cutting Disc (14"X4Mm Rippled Plain Disc Blade)		2	3	4	5	6
*50	5124010022-7	Complete Cutting Disc (14"X4Mm Plain)		2	3	4	5	6

BALDAN

• Row Planter

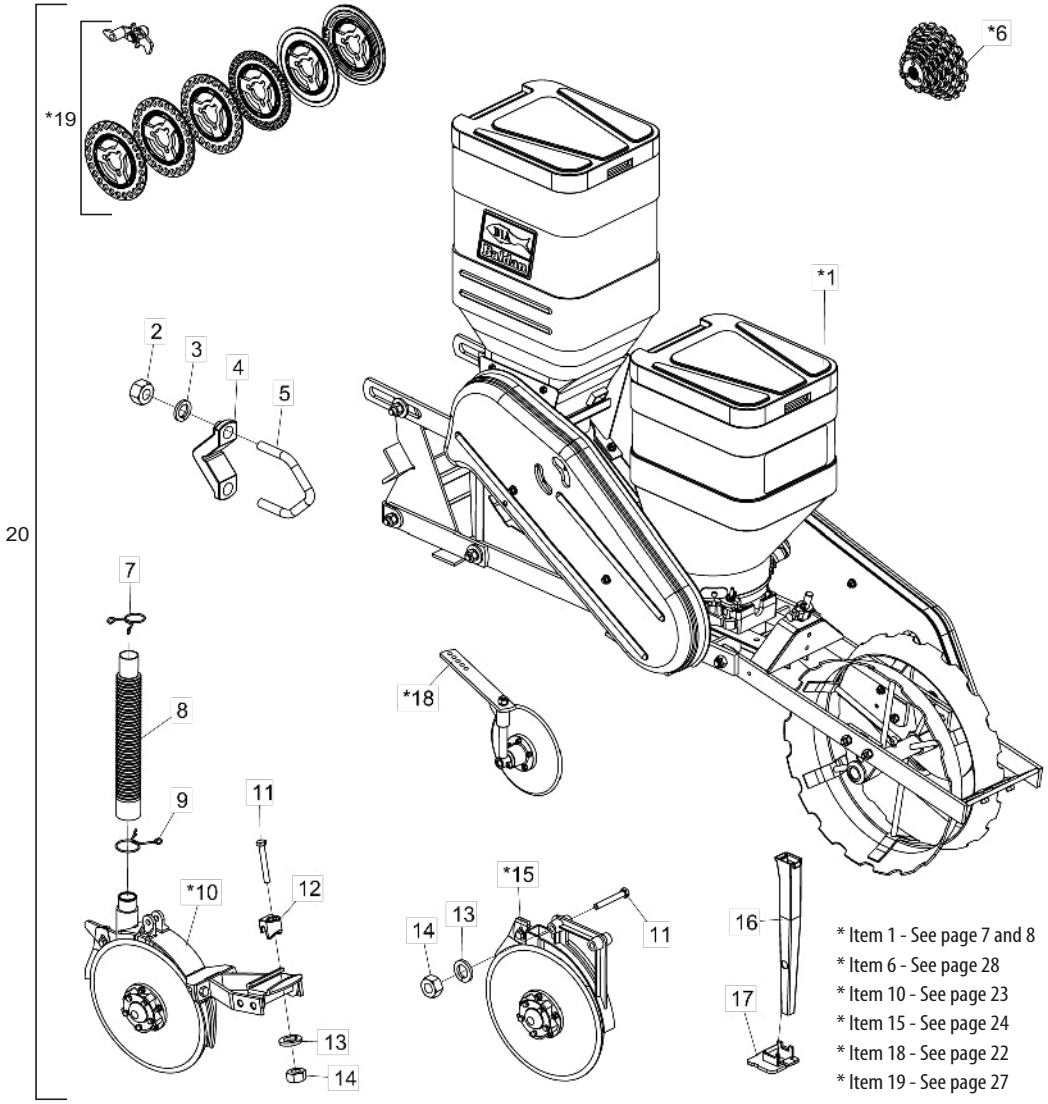

Item	Code	Product description	All	Iron for Conventional Planting	Rubber for Conventional Planting	Iron for Direct Planter	Rubber for Direct Planter	Iron for conv. Planter Without Fertilizer Hopper	Rubber for conv. Planter Without Fertilizer Hopper
*1	5124010523-7	Complete Row Planter With Iron Compactation Wheel - Conventional Planting		1					
*1	5124010522-9	Complete Row Planter With Rubber Compactation Wheel - Conventional Planting			1				
*1	5124010527-0	Complete Row Planter With Iron Compactation Wheel - No Till Planting				1			
*1	5124010526-1	Complete Row Planter With Rubber Compactation Wheel - No Till Planter					1		
*1	5124010521-0	Complete Row Planter W/ Iron Compactation Wheel - Conv. Planting Without Fertilizer Box						1	
*1	5124010520-2	Complete Row Planter W/ Rubber Compactation Wheel - Conv. Planting Without Fertilizer Box							1
2	6020310770-9	Hexagonal Nut 3/4" 10F Unc Gr5 Ch.1.7/32" Height 18,50Mm	4						
3	6020010414-8	Pressure Washer 3/4" Media Industry	4						
4	6010600770-8	Clamp	2						
5	5068060004-7	Clamp R3/4" Unc	2						
*6	5528010592-8	Sprockets For Plb		1	1	1	1		
*6	5528010442-5	Sprockets For Plb (Without Fertilizer)						1	1
7	6020250322-8	Lock Spring		1	1	1	1		
8	6020250111-0	Rubber Tube Ø38 X Ø50,8 X 400Mm (Hose 110)		1	1	1	1		
9	6020250339-2	Lock Spring		1	1	1	1		
*10	5124030111-7	Front Row Planter W/ Double Disc For Fertilizer		1	1	1	1		
11	6020317495-3	Hexagonal Head Bolt M12 X 1,75 X 90Mm Cl8.8 Rp		3	3	3	3	2	2
12	6010600896-8	Hitch Lock Of Discs Support		1	1	1	1		
13	6020010395-8	Pressure Washer M12 Media		3	3	3	3	2	2
14	6020310820-9	Hexagonal Nut M12 X 1,75 Ma Cl8 Ch.19Mm H.10,00Mm		3	3	3	3	2	2
*15	5124030118-4	Row Planter W/ Double Disc For Seed (Convex) Ø13" X 2,65Mm	1						
16	6020030123-7	Square Funnel 385Mm	1						
17	6010601101-2	Plastic Support	1						
*18	5220040001-1	Complete Cover Disc	1						
*19	5528010443-3	Seed Discs For Plb	1						
20	2517010743-0	Complete Row Unit W/Iron Wheel Compactation Conventional Planting		1					
20	2517010741-4	Complete Row Unit W/Rubber Compactation Wheel For Conventional Planting			1				
20	2517010742-2	Complete Row Unit W/Iron Wheel Compactation No Till				1			
20	2517010740-6	Complete Row Unit W/ Compactor Rubber Wheel For No Till					1		
20	2517010744-9	Complete Row Unit W/ Compactation Iron Wheel For Conv. Planting (Without Hopper)						1	
20	2517010745-7	Complete Row Unit W/ Compactation Rubber Wheel For Conventional Planting							1

• Row Planter W/ Iron Wheel Without Fertilizer Box

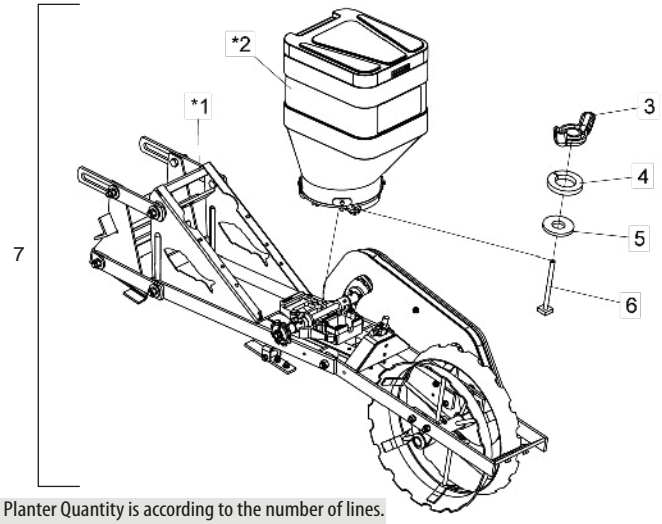

Item 7 - The Row Planter Quantity is according to the number of lines.

* Item 1 - See page 9
* Item 2 - See page 15

Item	Code	Product description	All
*1	5124100019-6	Row Planter W/ Iron Compactation Wheel For Conventional Planter Without Fertilizer Box	1
*2	5092010341-0	Seed Hopper 45Lt Complete(Red Ral 3020) Baldan System	1
3	6020310819-5	Nut M8 X 1,25	1
4	6020010004-5	Pressure Washer M8 Media	1
5	5024010073-5	Smooth Washer Ø8,5 X Ø20 X 2,00Mm	1
6	5420010102-5	Bolt M8 X 97Mm	1
7	5124010521-0	Complete Row Planter With Iron Compactation Wheel - Conventional Planting Without Fertilizer Box	-
7	5124010593-8	Complete Row Planter With Iron Compactation Wheel - Right Planting Without Fertilizer Box	-

• Row Planter W/ Iron Wheel W/ Fertilizer Box

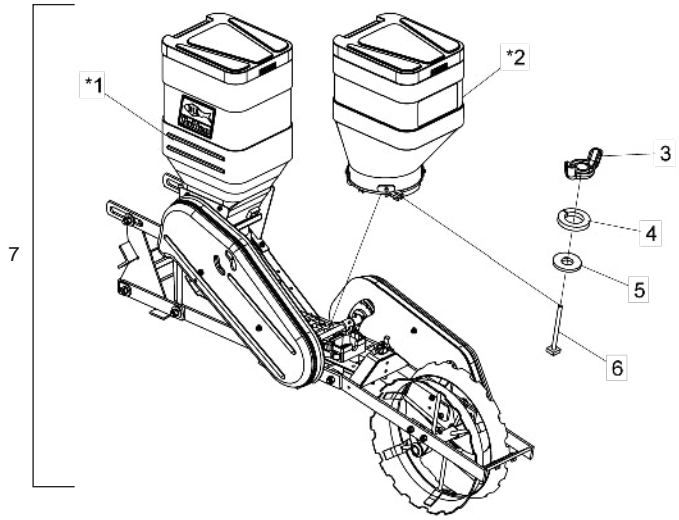

Item 7 - The Row Planter Quantity is according to the number of lines.

* Item 1 - See page 11
* Item 2 - See page 15

Item	Code	Product description	All
*1	5124010525-3	Row Planter W/Iron Compactation Wheel For Conventional Planting	1
*2	5092010341-0	Seed Hopper 45Lt Complete(Red Ral 3020) Baldan System	1
3	6020310819-5	Nut M8 X 1,25	1
4	6020010004-5	Pressure Washer M8 Media	1
5	5024010073-5	Smooth Washer Ø8,5 X Ø20 X 2,00Mm	1
6	5420010102-5	Bolt M8 X 97Mm(Cab.Soldada)	1
7	5124010523-7	Complete Row Planter With Iron Compactation Wheel - Conventional Planting	-
7	5124010527-0	Complete Row Planter With Iron Compactation Wheel - No Till	-

• Row Planter W/ Rubber Wheel Without Fertilizer Box - Optional

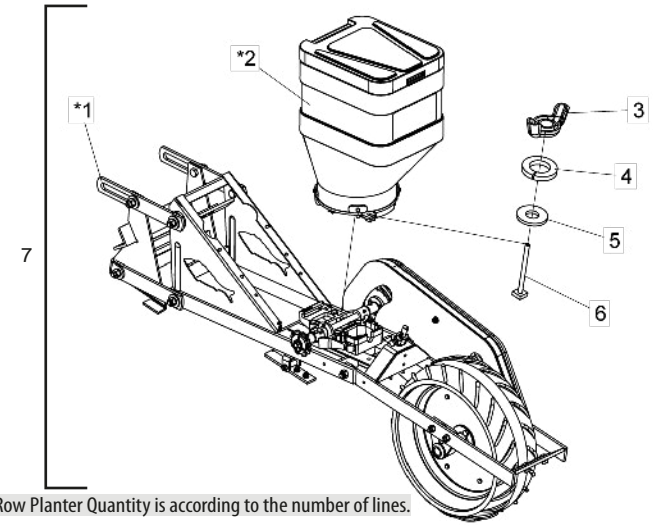

Item 7 - The Row Planter Quantity is according to the number of lines.

* Item 1 -See page 9
* Item 2 - See page 15

Item	Code	Product description	All
*1	5124100021-8	Row Planter W/ Rubber Compactation Wheel For Conventional Planter Without Fertilizer Hopper	1
*2	5092010341-0	Seed Hopper 45Lt Complete(Red Ral 3020) Baldan System	1
6	5420010102-5	Bolt M8 X 97Mm	1
3	6020310819-5	Nut M8 X 1,25	1
4	6020010004-5	Pressure Washer M8 Media	1
5	5024010073-5	Smooth Washer Ø8,5 X Ø20 X 2,00Mm	1
7	5124010520-2	Complete Row Planter With Rubber Compactation Wheel - Conventional Planting Without Fertilizer Box	-

• Row Planter W/ Rubber Wheel W/ Fertilizer Box - Optional

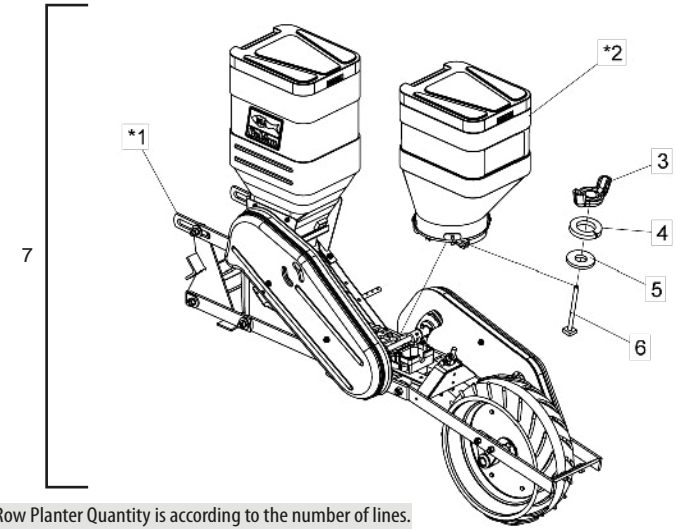

Item 7 - The Row Planter Quantity is according to the number of lines.

* Item 1 - See page 11
* Item 2 - See page 15

Item	Code	Product description	All
*1	5124010524-5	Cart W/ Rubber Compactation Wheel For Conventional Planter	1
*2	5092010341-0	Seed Hopper 45Lt Complete(Red Ral 3020) Baldan System	1
3	6020310819-5	Nut M8 X 1,25	1
4	6020010004-5	Pressure Washer M8 Media	1
5	5024010073-5	Smooth Washer Ø8,5 X Ø20 X 2,00Mm	1
6	5420010102-5	Parafuso Cab.Quadrada M8 X 97Mm(Cab.Soldada)	1
7	5124010522-9	Complete Cart With Rubber Compactation Wheel - Conventional Planting	-
7	5124010526-1	Complete Cart With Rubber Compactation Wheel - No Till Planter	-

• Row Planter W/ Compactation Wheel Without Fertilizer Box

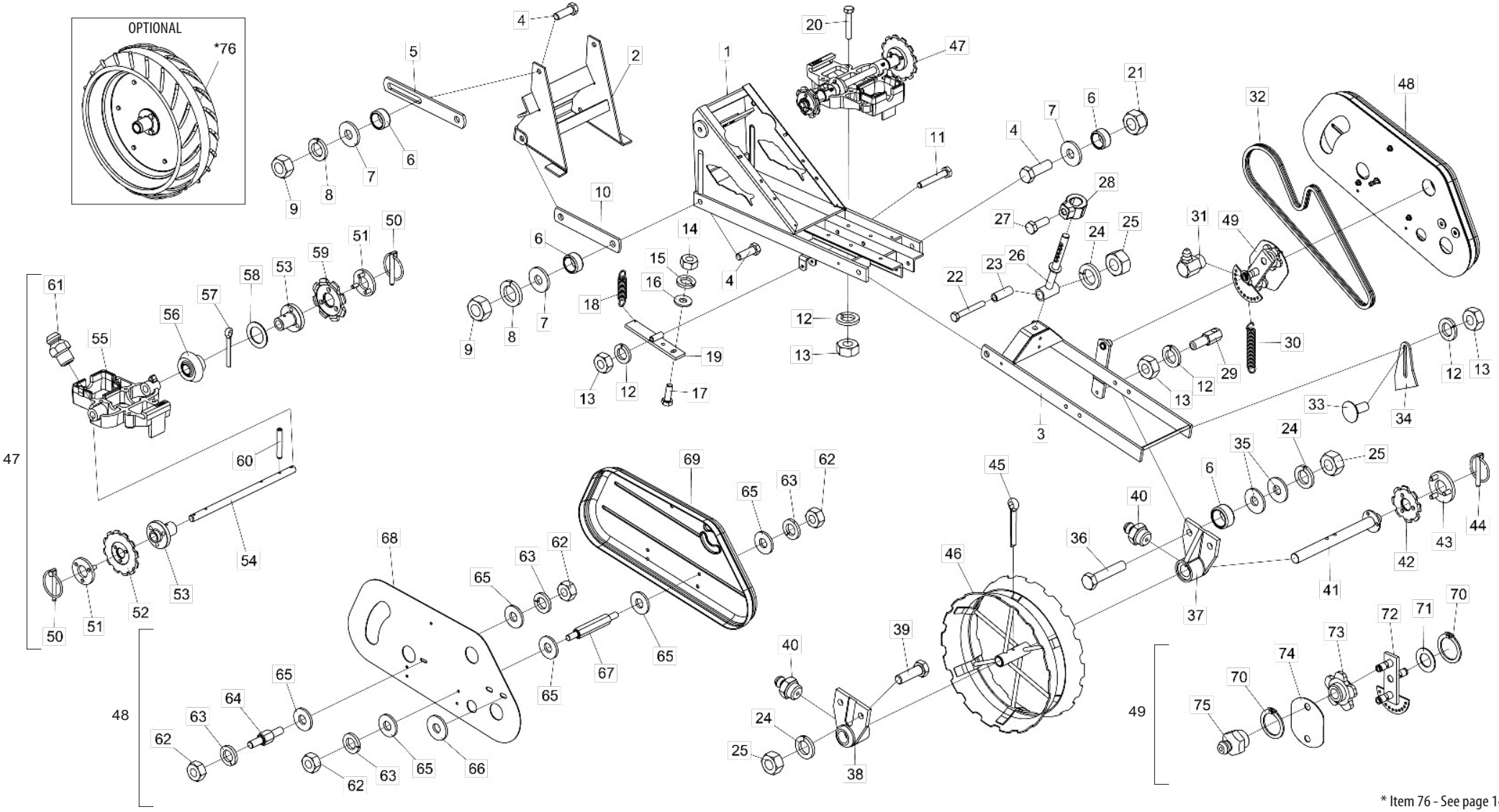

* Item 76 - See page 14
Seed Box - See page 15

BALDAN

• Table Row Planter W/ Compactation Wheel Without Fertilizer Box

Item	Code	Product description	All
1	5404010083-3	Spare Row Planter	1
2	5530220022-9	Support Of Row Planter	1
3	5530240033-3	Compactation Wheel Support	1
4	6020311210-9	Hexagonal Head Bolt M16 X 2,00 X 50Mm Cl8.8 Rt	10
5	5136020017-9	Articulation Upper Plate Support	2
6	5080020009-9	Bushing Of Ø21/32" X Ø7/8" X 11,3Mm	12
7	5024010298-3	Smooth Washer Ø17 X Ø44 X 4,75Mm(Galvanized)	8
8	6020010124-6	Pressure Washer M16 Media	8
9	6020310818-7	Hexagonal Nut M16 X 2,00 Ma Cl8 Ch.24Mm H.13,00Mm	8
10	5040120738-1	Articulation Support	2
11	6020310567-6	Hexagonal Head Bolt M10 X 1,50 X 65Mm Cl8.8 Rp	1
12	6020010394-0	Pressure Washer M10 Media	8
13	6020310822-5	Hexagonal Nut M10 X 1,50 Ma Cl8 Ch.17Mm H.8,00Mm	8
14	6020310454-8	Hexagonal Nut M8 X 1,25 Ma Cl8 Ch.13Mm H.6,50Mm	2
15	6020010004-5	Pressure Washer M8 Media	2
16	5024010073-5	Smooth Washer Ø8,5 X Ø20 X 2,00Mm	2
17	6020310448-3	Hexagonal Head Bolt M8 X 1,25 X 25Mm Cl8.8 Rt	2
18	6020250254-0	Helical Spring Ø11 X Ø15 X 53Mm	1
19	5530170144-5	Shaft Support	1
20	6020310151-4	Hexagonal Head Bolt M10 X 1,50 X 60Mm Cl8,8 Rt	4
21	6020317443-0	Self-Locking Nut With Nylon M16 X 2,00 Ma Cl8 Ch.24Mm H.16,00Mm	2
22	6020317495-3	Hexagonal Head Bolt M12 X 1,75 X 90Mm Cl8.8 Rp	1
23	5080010134-1	Bushing Of Ø13 X Ø19 X 52Mm	1
24	6020010395-8	Pressure Washer M12 Media	5
25	6020310820-9	Hexagonal Nut M12 X 1,75 Ma Cl8 Ch.19Mm H.10,00Mm	5
26	5566020043-5	Rod Spring	1
27	6020310349-5	Hexagonal Head Bolt M12 X 1,75 X 30Mm Cl8.8 R Wth Point	1
28	5080011663-2	Fixation Support Of Spring Rod	1
29	6020090685-6	Hexagonal Shaft Of Spring With Thread M10	1
30	6020250245-0	Helical Spring Ø14 X Ø19 X 130Mm	1
31	6020130112-5	Grease Fitting 1/8"	1
32	6020050043-4	Chain 2050 Of 51 Links + Amendment	1
33	6020317445-7	French Head Bolt M10 X 1,50 X 25Mm Cl8.8 Rt	2
34	5352010008-0	Wheel Scraper	2
35	5024010068-9	Smooth Washer Ø13,3 X Ø35,5 X 3,00Mm	4
36	6020310210-3	Hexagonal Head Bolt M12 X 1,75 X 60Mm Cl8.8 Rt	2
37	5204050014-6	Small Left Hub Of Compactation Wheel	1
38	5204050013-8	Small Right Hub Of Compactation Wheel	1
39	6020310152-2	Hexagonal Head Bolt M12 X 1,75 X 40Mm Cl8.8 Rp	2

Item	Code	Product description	All
40	6020130108-7	Grease Fitting 1/8"	2
41	5232070080-9	Compactation Wheel Shaft	1
42	5256030006-9	Sprocket 8 Teeth	1
43	5558100005-6	Lock	1
44	6020390293-2	Lock Ø5,75 X 40Mm	1
45	6020050122-8	Cotterpin 3/8" X 2.1/2"	1
46	5498050001-5	Spare Wheel Compactation	1
47	5530260014-6	Complete Support Of Seed Distributor Base	1
48	5464010390-9	Complete Lower Chain Protection	1
49	5268010072-1	Complete Chain Stretcher	1
50	6020390293-2	Lock Ø5,75 X 40Mm	2
51	5558100005-6	Lock	2
52	5256030012-3	Sprocket 12 Teeth	1
53	5204060017-5	Transmission Shaft Hub	2
54	5232020177-2	Transmission Shaft	1
55	5530260015-4	Support Of Seed Distributor Base	1
56	5428020003-7	Pinion Of 15 Teeth	1
57	6020050106-6	Cotterpin 3/16" X 1.1/2"	1
58	5024010160-0	Smooth Washer Ø20 X Ø31 X 1,21Mm	1
59	5256030006-9	Sprocket 8 Teeth	1
60	6020310485-8	Heavy Elastic Pin Ø6 X 36Mm	2
61	6020130100-1	Grease Fitting 1/4"	2
62	6020310454-8	Hexagonal Nut M8 X 1,25 Ma Cl8 Ch.13Mm H.6,50Mm	8
63	6020010004-5	Pressure Washer M8 Media	8
64	5232012008-0	Hexagonal Shaft 1/2" X 15,30Mm	1
65	5024010073-5	Smooth Washer Ø8,5 X Ø20 X 2,00Mm	14
66	5024010068-9	Smooth Washer Ø13,3 X Ø35,5 X 3,00Mm	2
67	5232012005-5	Hexagonal Shaft 1/2" X 62Mm	3
68	5136015446-0	Protection Plate of Lower Chain	1
69	6020055658-8	Small Chain Cap Plb	1
70	6020010252-8	Retention Oring	3
71	5024010059-0	Smooth Washer Ø16,5 X Ø29 X 1,21Mm	1
72	5268010073-0	Chain Stretcher	1
73	6020090502-7	Gear 5012-1	2
74	5136015444-4	Plate Of Stretcher	1
75	6020130108-7	Grease Fitting 1/8"	2
		Optional	
*76	5498070008-1	Complete Rubber Compaction Wheel	1

• Row Planter W/ Compactation Wheel W/ Fertilizer Box

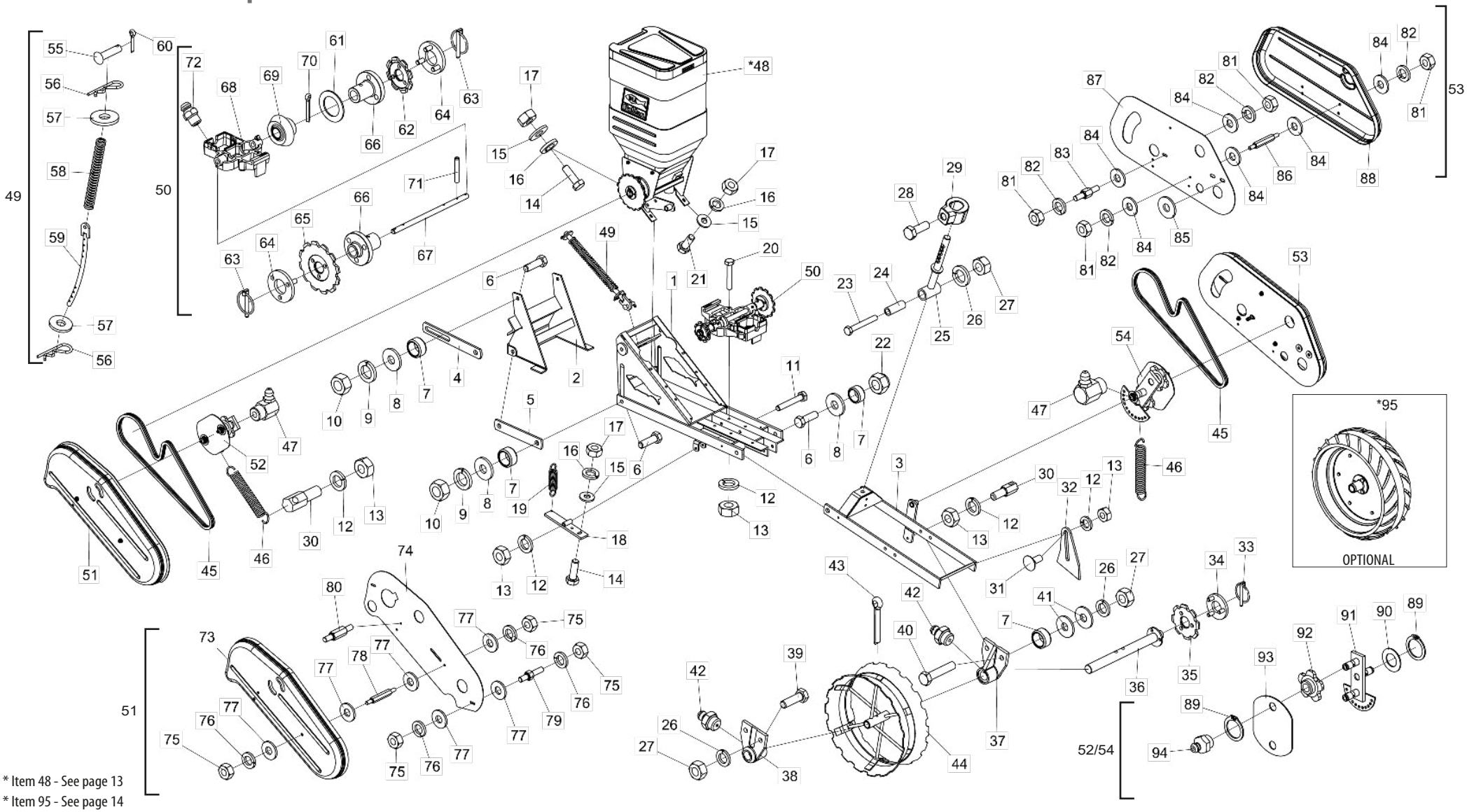

* Item 48 - See page 13
* Item 95 - See page 14
Seed Box - See page 15

BALDAN

• Table Row Planter W/ Compactation Wheel W/ Fertilizer Box

Item	Code	Product description	All
1	5404010083-3	Spare Row Planter	1
2	5530220022-9	Row Planter Support	1
3	5530240033-3	Support Of Compactation Wheel	1
4	5136020017-9	Articulation Upper Plate Support	2
5	5040120738-1	Articulation Lower Bar Support	2
6	6020311210-9	Hexagonal Head Bolt M16 X 2,00 X 50Mm Cl8.8 Rt	10
7	5080020009-9	Bushing Of Ø21/32" X Ø7/8" X 11,3Mm	12
8	5024010298-3	Smooth Washer Ø17 X Ø44 X 4,75Mm(Galvanized)	8
9	6020010124-6	Pressure Washer M16 Media	8
10	6020310818-7	Hexagonal Nut M16 X 2,00 Ma Cl8 Ch.24Mm H.13,00Mm	8
11	6020310567-6	Hexagonal Head Bolt M10 X 1,50 X 65Mm Cl8.8 Rp	1
12	6020010394-0	Pressure Washer M10 Media	9
13	6020310822-5	Hexagonal Nut M10 X 1,50 Ma Cl8 Ch.17Mm H.8,00Mm	9
14	6020310448-3	Hexagonal Head Bolt M8 X 1,25 X 25Mm Cl8.8 Rt	4
15	5024010073-5	Smooth Washer Ø8,5 X Ø20 X 2,00Mm	6
16	6020010004-5	Pressure Washer M8 Media	6
17	6020310454-8	Hexagonal Nut M8 X 1,25 Ma Cl8 Ch.13Mm H.6,50Mm	6
18	5530170144-5	Cover Shaft Support	1
19	6020250254-0	Helical Spring Ø11 X Ø15 X 53Mm	1
20	6020310151-4	Hexagonal Head Bolt M10 X 1,50 X 60Mm Cl8,8 Rt	4
21	6020311269-9	Hexagonal Head Bolt M8 X 1,25 X 20Mm Cl8.8 Rt	2
22	6020317443-0	Self-Locking Nut With Nylon M16 X 2,00 Ma Cl8 Ch.24Mm H.16,00Mm	2
23	6020317495-3	Hexagonal Head Bolt M12 X 1,75 X 90Mm Cl8.8 Rp	1
24	5080010134-1	Bushing Of Ø13 X Ø19 X 52Mm	1
25	5566020043-5	Rod Spring	1
26	6020010395-8	Pressure Washer M12 Media	5
27	6020310820-9	Hexagonal Nut M12 X 1,75 Ma Cl8 Ch.19Mm H.10,00Mm	5
28	6020310349-5	Hexagonal Head Bolt M12 X 1,75 X 30Mm Cl8.8 R Wth Point	1
29	5080011663-2	Fixation Support Of Spring Rod	1
30	6020090685-6	Hexagonal Shaft Of Spring With Thread M10	2
31	6020317445-7	French Head Bolt M10 X 1,50 X 25Mm Cl8.8 Rt	2
32	5352010008-0	Wheel Scraper	2
33	6020390293-2	Lock Ø5,75 X 40Mm	1
34	5558100005-6	Lock	1
35	5256030006-9	Sprocket 8 Teeth	1
36	5232070080-9	Compactation Wheel Shaft	1
37	5204050014-6	Small Left Hub Of Compactation Wheel	1
38	5204050013-8	Small Right Hub Of Compactation Wheel	1
39	6020310152-2	Hexagonal Head Bolt M12 X 1,75 X 40Mm Cl8.8 Rp	2
40	6020310210-3	Hexagonal Head Bolt M12 X 1,75 X 60Mm Cl8.8 Rt	2
41	5024010068-9	Smooth Washer Ø13,3 X Ø35,5 X 3,00Mm	4
42	6020130108-7	Grease Fitting 1/8"	2
43	6020050122-8	Cotterpin 3/8" X 2.1/2"	1
44	5498050001-5	Compactation Wheel	1
45	6020050043-4	Chain 2050 Of 51 Links + Amendment	2
46	6020250245-0	Helical Spring Ø14 X Ø19 X 130Mm Wire=Ø2,5Mm	2
47	6020130112-5	Grease Fitting 1/8"	2
*48	5530012421-5	Complete Support With Fertilizer Box	1
49	5566010065-1	Complete Front Rod Of Spring	1

Item	Code	Product description	All
50	5530260014-6	Complete Support Of Seed Distributor Base	1
51	5464010392-5	Complete Upper Chain Protection	1
52	5268010824-2	Complete Chain Stretcher	1
53	5464010390-9	Complete Lower Chain Protection	1
54	5268010072-1	Complete Chain Stretcher	1
55	6020311237-0	French Head Pin Ø11,2 X 42Mm	1
56	6020390294-0	Lock Nma - Type "R" Ø3,5 X 67Mm(Special)	2
57	5024010298-3	Smooth Washer Ø17 X Ø44 X 4,75Mm(Galvanized)	2
58	6020250286-8	Helical Spring Ø20,5 X Ø30 X 260Mm	1
59	5566040117-1	Front Rod Of Spring	1
60	6020050104-0	Cotterpin 3/16" X 1"	1
61	5024010160-0	Smooth Washer Ø20 X Ø31 X 1,21Mm	1
62	5256030006-9	Sprocket 8 Teeth	1
63	6020390293-2	Lock Ø5,75 X 40Mm	2
64	5558100005-6	Lock	2
65	5256030012-3	Sprocket 12 Teeth	1
66	5204060017-5	Transmission Shaft Hub	2
67	5232020177-2	Transmission Shaft	1
68	5530260015-4	Support Of Seed Distributor Base	1
69	5428020003-7	Pinion Of 15 Teeth	1
70	6020050106-6	Cotterpin 3/16" X 1.1/2"	1
71	6020310485-8	Heavy Elastic Pin Ø6 X 36Mm (Seeger Reno 701.163)	2
72	6020130100-1	Grease Fitting 1/4"	2
73	6020055659-6	Large Chain Cap Plb (Yellow Emergency Sam-Am)	1
74	5136015449-5	Upper Protection Plate	1
75	6020310454-8	Hexagonal Nut M8 X 1,25 Ma Cl8 Ch.13Mm H.6,50Mm	8
76	6020010004-5	Pressure Washer M8 Media	8
77	5024010073-5	Smooth Washer Ø8,5 X Ø20 X 2,00Mm	14
78	5232012005-5	Hexagonal Shaft 1/2" X 62Mm	2
79	5232012006-3	Hexagonal Shaft 1/2" X 9,5Mm	1
80	5232012007-1	Hexagonal Shaft De 1/2" X 29Mm.	1
81	6020310454-8	Hexagonal Nut M8 X 1,25 Ma Cl8 Ch.13Mm H.6,50Mm	8
82	6020010004-5	Pressure Washer M8 Media	8
83	5232012008-0	Hexagonal Shaft 1/2" X 15,30Mm	1
84	5024010073-5	Smooth Washer Ø8,5 X Ø20 X 2,00Mm	14
85	5024010068-9	Smooth Washer Ø13,3 X Ø35,5 X 3,00Mm	2
86	5232012005-5	Hexagonal Shaft 1/2" X 62Mm	3
87	5136015446-0	Protection Plate Of Chain	1
88	6020055658-8	Small Chain Cap Plb	1
89	6020010252-8	Retention Ring E-16 G501-016-01	6
90	5024010059-0	Smooth Washer Ø16,5 X Ø29 X 1,21Mm	4
91	5268010825-0	Chain Stretcher	1
91	5268010073-0	Chain Stretcher	1
92	6020090502-7	Sprocket 5012-1	4
93	5136015444-4	Plate Of Stretcher	2
94	6020130108-7	Grease Fitting 1/8"	4
		Optional	
*95	5498070008-1	Complete Rubber Compaction Wheel	1

• Complete Fertilizer Box

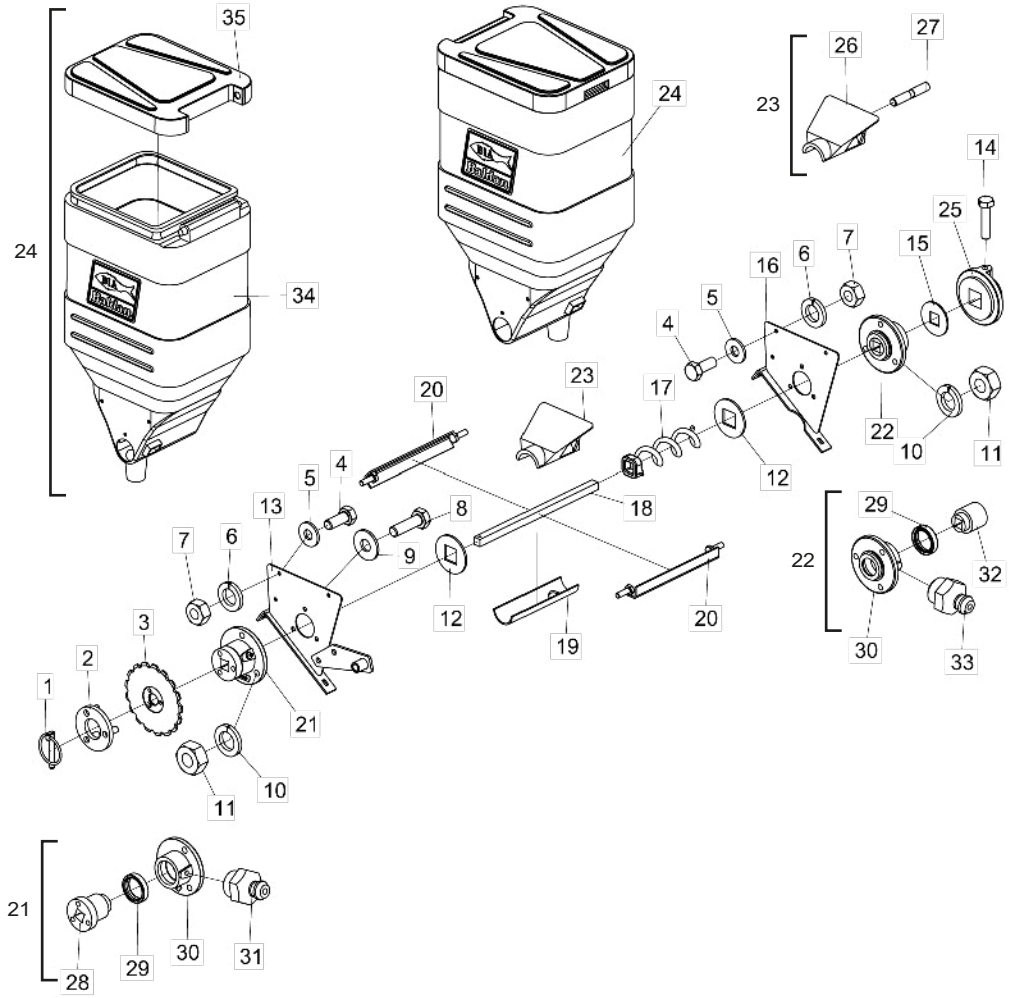

Item	Code	Product description	All
1	6020390293-2	Lock Ø5,75 X 40Mm	1
2	5558100005-6	Lock Of Gear	1
3	5256030018-2	Sprocket 17 Teeth	1
4	6020311269-9	Hexagonal Head Bolt M8 X 1,25 X 20Mm Cl8.8 Rt	4
5	5024010073-5	Smooth Washer Ø8,5 X Ø20 X 2,00Mm	4
6	6020010004-5	Pressure Washer M8 Media	4
7	6020310454-8	Hexagonal Nut M8 X 1,25 Ma Cl8 Ch.13Mm H.6,50Mm	4
8	6020310437-8	Hexagonal Head Bolt M10 X 1,50 X 35Mm Cl8.8 Rt	1
9	5024010075-1	Smooth Washer Ø10,3 X Ø25 X 2,00Mm	1
10	6020010394-0	Pressure Washer M10 Media	6
11	6020310822-5	Hexagonal Nut M10 X 1,50 Ma Cl8 Ch.17Mm H.8,00Mm	6
12	5024010328-9	Stainless Washer 20 X Ø48 X 2,50Mm	2
13	5346020007-1	Left Lateral Support	1
14	6020310560-9	Hexagonal Head Bolt M8 X 1,25 X 35Mm Cl8.8 Rt	1
15	5024070007-4	Smooth Washer Ø20 X Ø56,5 X 3,00Mm	1
16	5346020008-0	Right Left Lateral Support	1
17	5400010106-3	Right Spiral Spring Q21 X 195 X 7,93Mm (Pace 50,80Mm)	1
18	5232060236-0	Shaft Q3/4" X 400Mm	1
19	5106010026-1	Funnel Cover Of 224Mm	1
20	5530016347-4	Supportof Lock Of Box	2
21	5204010109-8	Complete Left Hub	1
22	5204010108-0	Complete Right Hub	1
23	5538014970-1	Complete Fertilizer Dosing Cover	1
24	6020055066-0	Plastic Box For Fertilizer 65 Liters With Cover (Red Ral-3020)	1
25	6020015920-1	Plastic Washer - Square Hole With Dimple	1
26	5538014969-8	Fertilizer Dosing Cover	1
27	6020395063-5	Rod M10 X 58Mm	1
28	5204070032-3	Hub	1
29	6020350255-1	Retainer Ø35,00 X Ø47,00 X 10,00Mm	2
30	5204010110-1	Hub	2
31	6020130108-7	Grease Fitting 1/8"	1
32	6020030088-5	Bushing With Square Hole 3/4" X 48 X 53Mm	1
33	6020130108-7	Grease Fitting 1/8"	1
34	6020055065-2	Plastic Box For Fertilizer 65 Liters Without Cover (Red Ral-3020)	1
35	6020390869-8	Cover Of Fertilizer/Seed Plastic Hopper 65 Liters (Black)	1

• Complete Rubber Compactation Wheel - Optional

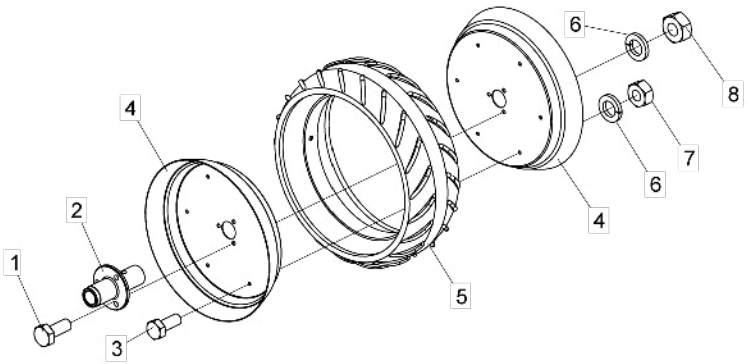

Item	Code	Product description	All
1	6020310452-1	Hexagonal Head Bolt M10 X 1,50 X 25Mm Cl8.8 Rt	3
2	5204010369-4	Wheel Hub	1
3	6020311269-9	Hexagonal Head Bolt M8 X 1,25 X 20Mm Cl8.8 Rt	6
4	5018010015-3	Compactation Wheel Rim	2
5	6020030182-2	Rubber Compactation Wheel	1
6	6020010004-5	Pressure Washer M8 Media	9
7	6020310454-8	Hexagonal Nut M8 X 1,25 Ma Cl8 Ch.13Mm H.6,50Mm	6
8	6020310822-5	Hexagonal Nut M10 X 1,50 Ma Cl8 Ch.17Mm H.8,00Mm	3

• Hydraulic Cylinder of Row Marker

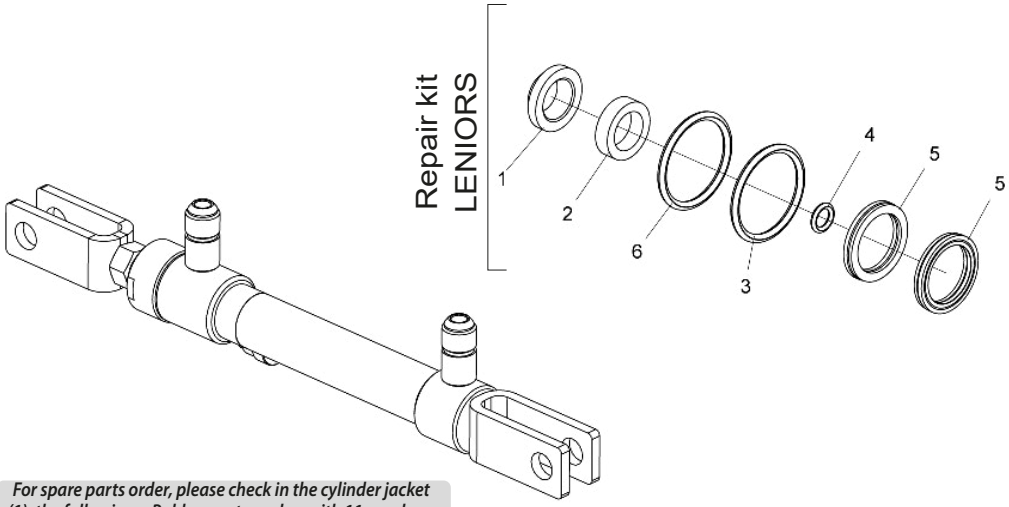

For spare parts order, please check in the cylinder jacket (1), the following: - Baldan part number with 11 numbers, the manufacturer code, name and manufacturer date.

Item	Code	Product description	All
		Repair Kit LENIORS	
1	J019826	Creaner D-500	1
2		Gasket Std 1250-750	2
3		Parback 8-021	2
4		O´Ring 2-010 (Ø6,07 x Ø1,78mm)	1
5		O´Ring 2-022 (Ø25,12 x Ø1,78mm)	2
6		Gasket B 1250-500-250B	1
-	6020190221-8	Repair Kit Leniors J019826	1

*Note: Hydraulic Cylinder - See page 21

• Seed Box

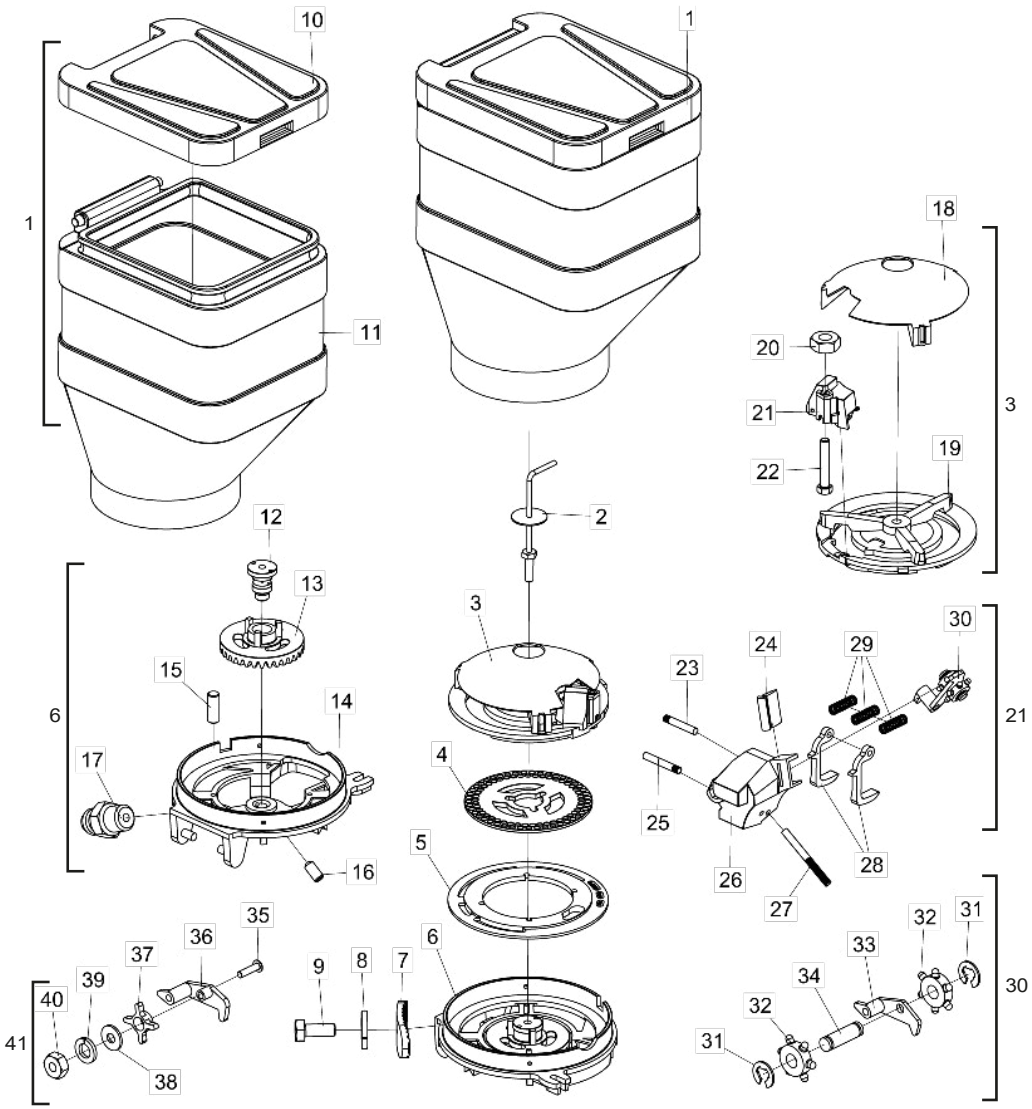

Item	Code	Product description	All
1	6020055068-7	Plastic Box For Seed 45 Liters With Cover	1
2	5420010103-3	Seed Hopper Bolt	1
3	6020370157-0	Complete Upper Support Of Distriutor Disc	1
4	6020070009-3	Soy Deam Distributor Disc 90H Ø8,5Mm (Ø43 X Ø186 X 4,50Mm)	1
5	5220020085-3	Metallic Dual Side Disc (Ø132 X Ø233 X 7,50Mm)	1
6	5044010348-8	Seed Distributor Base	1
7	5530011945-9	Seed Box Fixation Support	4
8	6020010122-0	Pressure Washer	4
9	6020310291-0	Hexagonal Head Bolt M6 X 1,00 X 15Mm Cl8.8 Rt	4
10	6020390869-8	Cover Of Fertilizer/Seed Plastic Hopper 65 Liters (Black)	1
11	6020055067-9	Plastic Box For Seed 45 Liters Without Cover	1
12	5232012000-4	Seed Distributor Shaft	1
13	5164020004-2	Crown Of 33 Teeths	1
14	5044010347-0	Seed Distribuotoor Base	1
15	5432090085-1	Flat Pin Ø6,8 X 18Mm With	2
16	6020310259-6	Allen Bolt S/C M6 X 1,00 X 12Mm Ma Cl12.9 Rt(Phosphatized)	1
17	6020130100-1	Grease Fitting 1/4"	1
18	6020390405-6	Protection Cover Of Seed	1
19	6020370142-2	Upper Support Of Distriutor Disc	1
20	6020310744-0	Hexagonal Nut 5/16" 18F Unc Gr5 Ch.1/2" Height 6,50Mm	1
21	6020050423-5	Complete Seed Distributor Box	1
22	6020311025-4	Hexagonal Head Bolt 5/16" X 2" 18F Unc1A Gr2 Rp	1
23	6020310425-4	Pin Ø5 X 30Mm	1
24	6020310607-9	Rubber Protection	1
25	6020310424-6	Pin Ø5 X 34Mm	1
26	6020050404-9	Seed Distributor Box	1
27	6020310423-8	Pin Ø5 X 52Mm	1
28	6020130207-5	Trigger Seed Cleaner	2
29	6020250328-7	Helical Spring Ø8 X Ø9,7 X 29,5Mm Wire=Ø0,85Mm	3
30	6020130206-7	Trigger Cleaner	1
31	6020010246-3	Retention Ring Rs-05 G503-050-01	2
32	6020350784-7	Seed Batcher Rossete	2
33	6020130205-9	Batcher Trigger	1
34	6020310526-9	Plastic Pin Ø7 X 18.5 X 23.5	1
35	6020310122-0	Bolt 3/16" X 3/4" 24F Unc1A Gr5 Rt	1
36	6020130204-0	Trigger-Support Of Rossete	1
37	6020350876-2	Batcher Rossete With Hole Ø8,3Mm	1
38	5024010423-4	Smooth Washer Ø5,5 X Ø12,7 X 1,21Mm	1
39	6020010400-8	Pressure Washer 3/16" Media Industry	1
40	6020310740-7	Hexagonal Nut 3/16" 24F Unc Gr5 Ch.3/8" Height 4,50Mm	1
41	6020350116-4	Complete Rossete	1

Obs: The Seed Box is composed of all mentioned parts in this lis, but when sold complete the itens 35 until 41 do no go together.

• Row Planter Titanium - Optional

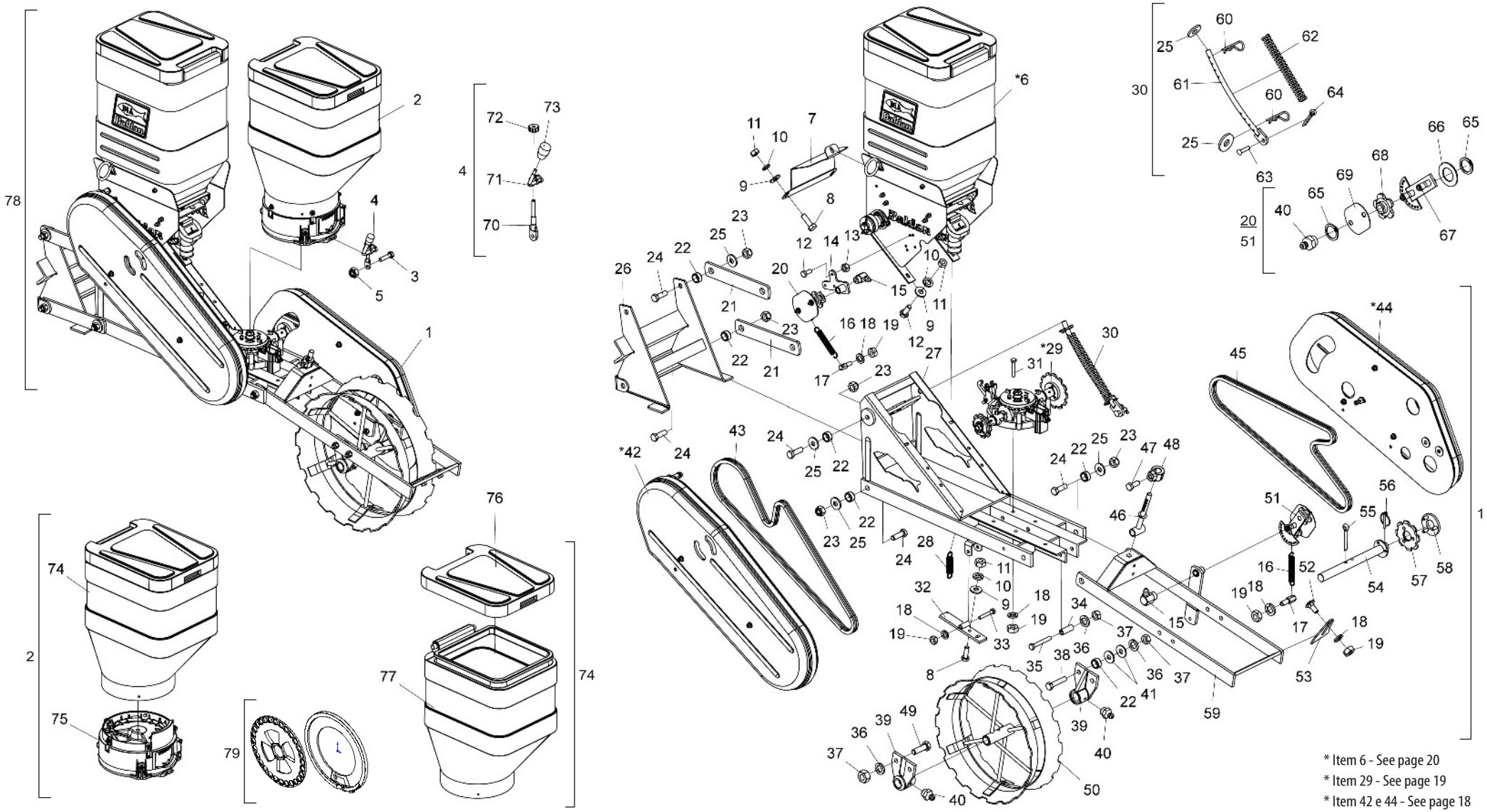

* Item 6 - See page 20
* Item 29 - See page 19
* Item 42 e 44 - See page 18

• Table Row Planter Titanium - Optional

Item	Code	Product description	All
1	5124010956-9	Row Planter W/Iron Compactor Wheel For Right Planting	1
2	5092010560-0	Seed Hopper 45 Litros Complete(Red Ral-3020) Titanium System	1
3	6020310027-5	Hexagonal Head Bolt M6 X 1,00 X 25mm Cl8.8 Rt	1
4	5558010431-1	Complete Lock Of Seed Box	1
5	6020317442-2	Self-Locking Nut With Nylon Low M6 X 1,00 Ma Cl8 Ch.10mm H.6,00mm	1
*6	5530017734-3	Complete Support W/Box	1
7	5106010205-1	Protection Cover Fertisystem PLB	1
8	6020310448-3	Hexagonal Head Bolt M8 X 1,25 X 25mm Cl8.8 Rt	4
9	5024010073-5	Smooth Washer Ø8,5 X Ø20 X 2,00mm	6
10	6020010004-5	Pressure Washer M8 Media	6
11	6020310454-8	Hexagonal Nut M8 X 1,25 Ma Cl8 Ch.13mm H.6,50mm	6
12	6020311269-9	Hexagonal Head Bolt M8 X 1,25 X 20mm Cl8.8 Rt	5
13	6020317449-0	Self-Locking Nut With Nylon Low M8 X 1,25 Ma Cl8 Ch.13mm H.8,00mm	3
14	5530017733-5	Chain Stretcher Support	1
15	6020130112-5	Grease Fitting 1/8"	2
16	6020250245-0	Helical Spring Ø14 X Ø19 X 130mm	2
17	6020090685-6	Hexagonal Shaft Of Spring With Thread M10	2
18	6020010394-0	Pressure Washer M10 Media	9
19	6020310822-5	Hexagonal Nut M10 X 1,50 Ma Cl8 Ch.17mm H.8,00mm	9
20	5268010826-9	Complete Chain Stretcher (Asa 2050)	1
21	5040120738-1	Articulation Support	4
22	5080020009-9	Bushing Of Ø21/32" X Ø7/8" X 11,3mm	12
23	6020317443-0	Self-Locking Nut With Nylon M16 X 2,00 Ma Cl8 Ch.24mm H.16,00mm	10
24	6020311210-9	Hexagonal Head Bolt M16 X 2,00 X 50mm Cl8.8 Rt	10
25	5024010298-3	Smooth Washer Ø17 X Ø44 X 4,75mm	10
26	5530220022-9	Row Planter Support	1
27	5404010083-3	Spare Row Planter	1
28	6020250254-0	Helical Spring Ø11 X Ø15 X 53mm	1
*29	5044010401-8	Handle Of Seed Distributor Base PLB	1
30	5566010065-1	Complete Front Rod Of Spring	1
31	6020310151-4	Hexagonal Head Bolt M10 X 1,50 X 60mm Cl8,8 Rt	4
32	5530170144-5	Shaft Support	1
33	6020310567-6	Hexagonal Head Bolt M10 X 1,50 X 65mm Cl8.8 Rp	1
34	5080010134-1	Bushing Of Ø13 X Ø19 X 52mm	1
35	6020317495-3	Hexagonal Head Bolt M12 X 1,75 X 90mm Cl8.8 Rp	1
36	6020010395-8	Pressure Washer M12 Media	5
37	6020310820-9	Hexagonal Nut M12 X 1,75 Ma Cl8 Ch.19mm H.10,00mm	5
38	6020310210-3	Hexagonal Head Bolt M12 X 1,75 X 60mm Cl8.8 Rt	2
39	5204050014-6	Small Left Hub Of Compactation Wheel	1
39	5204050013-8	Small Right Hub Of Compactation Wheel	1
40	6020130108-7	Grease Fitting 1/8"	6
41	5024010068-9	Smooth Washer Ø13,3 X Ø35,5 X 3,00mm	4
*42	5464010631-2	Full Upper Current Protection	1
43	6020051048-0	Chain 2050 Of 58 Links + Reduction	1
*44	5464010390-9	Complete Lower Chain Protection	1
45	6020050043-4	Chain 2050 Of 51 Links + Amendment	1

Item	Code	Product description	All
46	5566020043-5	Rod Spring	1
47	6020310349-5	Hexagonal Head Bolt M12 X 1,75 X 30mm Cl8.8 R Wth Point	1
48	5080011663-2	Fixation Support Of Spring Rod	1
49	6020310152-2	Hexagonal Head Bolt M12 X 1,75 X 40mm Cl8.8 Rp	2
50	5498050001-5	Compactation Wheel	1
51	5268010072-1	Complete Chain Stretcher	1
52	6020317445-7	French Head Bolt M10 X 1,50 X 25mm Cl8.8 Rt	2
53	5352010008-0	Wheel Scraper	2
54	5232070080-9	Compactation Wheel Shaft	1
55	6020050122-8	Cotterpin 3/8" X 2.1/2"	1
56	6020390293-2	Lock Ø5,75 X 40mm	1
57	5256030006-9	Sprocket 8 Teeth	1
58	5558100005-6	Lock	1
59	5530240033-3	Compactation Wheel Support	1
60	6020390294-0	Lock Nma - Type "R" Ø3,5 X 67mm(Special)	2
61	5566040117-1	Front Rod Of Spring	1
62	6020250286-8	Helical Spring Ø20,5 X Ø30 X 260mm	1
63	6020311237-0	French Head Pin Ø11,2 X 42mm	1
64	6020050104-0	Cotterpin 3/16" X 1"	1
65	6020010252-8	Retaining Oring	6
66	5024010059-0	Smooth Washer Ø16,5 X Ø29 X 1,21mm	2
67	5268010827-7	Chain Stretcher (Asa 2050)	1
67	5268010073-0	Chain Stretcher	1
68	6020090502-7	Sprocket 5012-1	4
69	5136015444-4	Plate Of Stretcher	2
70	5432010578-4	Lock Pin	1
71	5558010432-0	Lock Of Seed Box	1
72	5456010109-3	Adjustment Of Nut	1
73	6020430203-3	Handle Pma 330 Thread 3/8" X 16 Fios	1
74	6020055068-7	Plastic Box For Seed 45 Liters With Cover	1
75	6020055623-5	Titanium Kit With Assembly Seed Hopper Kit (1030001)	1
76	6020390869-8	Cover Of Fertilizer/Seed Plastic Hopper 65 Liters (Black)	1
77	6020055067-9	Plastic Box For Seed 45 Liters Without Cover	1
78	5124017999-0	Row Planter With Iron Compactation Wheel - No Till	1
79	6020056425-4	Titanium Disc/Rings Kit For Maize 28 Holes (1060002)	1
79	6020056426-2	Titanium Disc/Rings Kit For Soy 90 Holes (1060003)	1

• Complete Lower Chain Protection

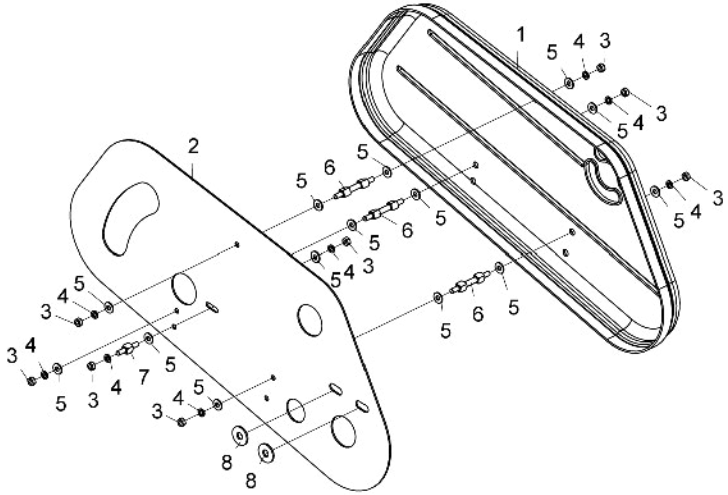

Item	Code	Product description	All
1	6020055658-8	Small Chain Cap Plb	1
2	5136015446-0	Lower Current Protection Plate	1
3	6020310454-8	Hexagonal Nut M8 X 1,25 Ma Cl8 Ch.13mm H.6,50mm	8
4	6020010004-5	Pressure Washer M8 Media	8
5	5024010073-5	Smooth Washer Ø8,5 X Ø20 X 2,00mm	14
6	5232012005-5	Hexagonal Shaft 1/2" X 62mm	3
7	5232012008-0	Hexagonal Shaft 1/2" X 15,30mm	1
8	5024010068-9	Smooth Washer Ø13,3 X Ø35,5 X 3,00mm	2

• Proteção de Corrente Superior Completa

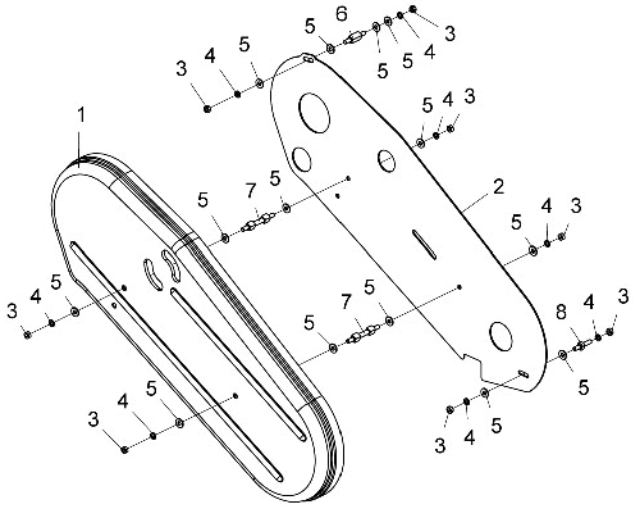

Item	Code	Product description	All
1	6020055665-0	Large Chain Cap Plb Air	1
2	5136018721-0	Upper Current Protection Plate	1
3	6020310454-8	Hexagonal Nut M8 X 1,25 Ma Cl8 Ch.13mm H.6,50mm	8
4	6020010004-5	Pressure Washer M8 Media	8
5	5024010073-5	Smooth Washer Ø8,5 X Ø20 X 2,00mm	14
6	5232012007-1	Hexagonal Shaft De 1/2" X 29mm.	1
7	5232012005-5	Hexagonal Shaft 1/2" X 62mm	2
8	5232012006-3	Hexagonal Shaft 1/2" X 9,5mm	1

• Distributor Base Seed - Titanium

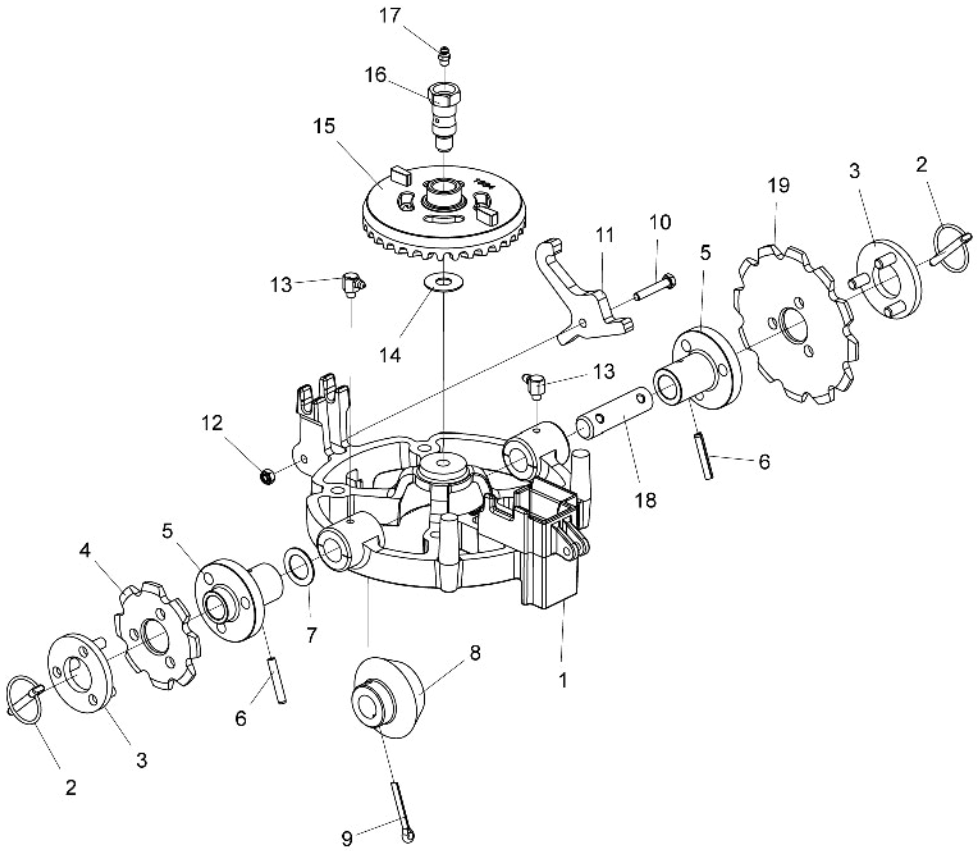

Item	Code	Product description	All
1	5530018332-7	Support Of Seed Distributor Base	1
2	6020390293-2	Lock Ø5,75 X 40mm	2
3	5558100005-6	Lock	2
4	5256030006-9	Sprocket 8 Teeth	1
5	5204010544-1	TRansmission Shaft Hub	2
6	6020310485-8	Heavy Elastic Pin Ø6 X 36mm	2
7	5024010160-0	Smooth Washer Ø20 X Ø31 X 1,21mm	1
8	5428010017-2	Pinion Of 15 Teeth	1
9	6020050106-6	Cotterpin 3/16" X 1.1/2"	1
10	6020310898-5	Hexagonal Head Bolt M6 X 1,00 X 35mm Cl8.8 Rt	1
11	5558010574-1	Seed Box Lock	1
12	6020317442-2	Self-Locking Nut With Nylon Low M6 X 1,00 Ma Cl8 Ch.10mm H.6,00mm	1
13	6020130106-0	Grease Fitting 1/4"	2
14	5024010027-1	Plain Washer Ø12,3 X Ø30 X 1,21mm	1
15	5164010021-8	Crown Of 33 Teeths	1
16	5232012318-6	Fixation Shaft Of Crown And Pinion	1
17	6020130100-1	Grease Fitting 1/4"	1
18	5232012317-8	Transmission Shaft	1
19	5256030012-3	Sprocket 12 Teeth	1

• Fertilizer Box Support - Titanium

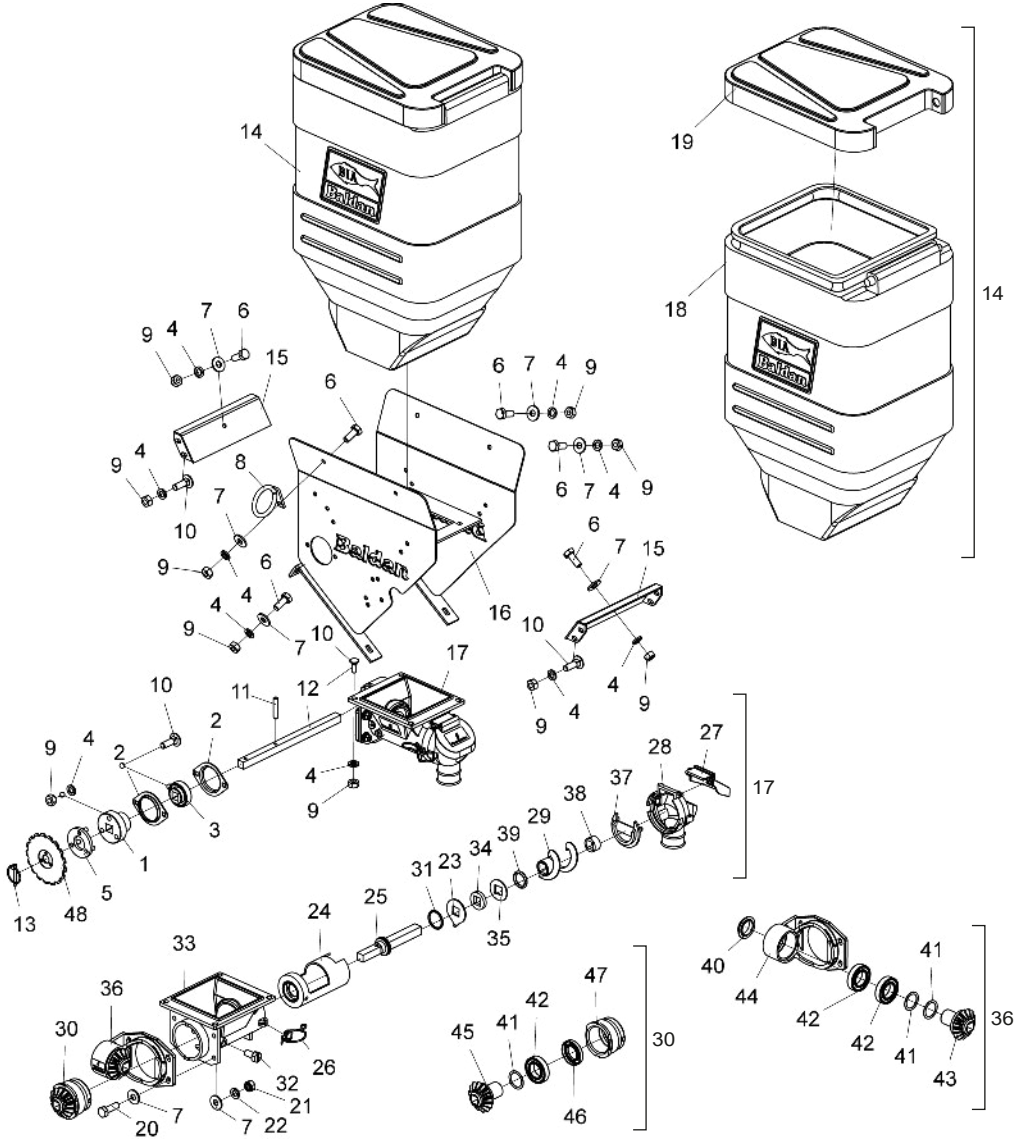

Item	Code	Product description	All
1	5204010411-9	Small Hub With Hole Sq 20mm	1
2	6020250412-7	Steel Plate Bearing 03.52 Mst	2
3	6020250117-9	Bearing Assy F-110934.1	1
4	6020010004-5	Pressure Washer M8 Media	20
5	5558100005-6	Lock	1
6	6020311269-9	Hexagonal Head Bolt M8 X 1,25 X 20mm Cl8.8 Rt	6
7	5024010073-5	Smooth Washer Ø8,5 X Ø20 X 2,00mm	14
8	5530014858-0	Support Of Hoses	1
9	6020310454-8	Hexagonal Nut M8 X 1,25 Ma Cl8 Ch.13mm H.6,50mm	20
10	6020317457-0	French Head Bolt M8 X 1,25 X 25mm Cl8.8 Rt	14
11	6020310471-8	Heavy Elastic Pin Ø6 X 30mm	1
12	5232011419-5	Shaft Sq.5/8" X 284mm	1
13	6020390293-2	Lock Ø5,75 X 40mm	1
14	6020055321-0	Plastic Box For Fertilizer 65 Liters With Cover	1
15	5558010388-9	Lock Of Fertilizer Box	2
16	5530017735-1	Box Support	1
17	6020057987-1	Batcher Kit Fertisystem Auto-Lub Ap/2E Ng Me(Fertisystem 11040000)	1
18	6020055322-8	Plastic Box For Fertilizer 65 Liters Without Cover	1
19	6020390869-8	Cover Of Fertilizer/Seed Plastic Hopper 65 Liters (Black)	1
20	6020310561-7	Hexagonal Head Bolt M8 X 1,25 X 25mm Cl 5.8 Rt	4
21	6020317449-0	Self-Locking Nut With Nylon Low M8 X 1,25 Ma Cl8 Ch.13mm H.8,00mm	4
22	6020010404-0	Pressure Washer 5/16" Media Industry	4
23	6020010504-7	Cleaning Washer (200201004)	1
24	6020350530-5	Coat (300304002)	1
25	6020090686-4	Shaft Ng(Fertysystem 200201038)	1
26	6020310680-0	Clamp 0,70	2
27	6020051127-4	Nozzle Cover Kit Ng(300304006)Emb. C/ 5	1
28	6020030302-7	Nozzle Ng(200201014)	1
29	6020370258-5	Spring S 2" Left "Optional"(Fertisystem 300305004)	1
30	6020310619-2	Internal Bearing Assembly(450451001)	1
31	6020010041-0	O´Ring 2-219 N3009-90Nbr (32,92)	1
32	6020310295-2	Hexaon Head Slotted Bolt M8 X 16mm (200205002)	2
33	6020051128-2	Main Body Ng(200201013)	1
34	6020110095-2	Felt (07000023)	1
35	6020010503-9	Square Inox Washer (200202011)	1
36	6020250494-1	Self Lubricating Bearing Assembly(450451002)	1
37	6020390067-0	Transversal Cover (200201008)	1
38	6020010230-7	Lock Ring (200201007)	1
39	6020010008-8	O´Ring Fk1-209 3,5 X 17,5-Ref 2209(100103004)	1
40	6020310604-4	Bearing Protection (200201011)	1
41	5024010243-6	Smooth Washer Ø30 X Ø39 X 0,91mm	1
42	6020350006-0	Bearing 6006 2Rs Ddu	3
43	6020310580-3	Actuation Pinion(200201012)	1
44	6020250417-8	Bearing Auto-Lub (07000070)	1
45	6020310909-4	Pinion Drive	1
46	6020350320-5	Retainer	1
47	6020030074-5	Bushing (200201010)	1
48	5256030018-2	Sprocket 17 Teeth	1

• Hydraulic System For Row Marker - Optional

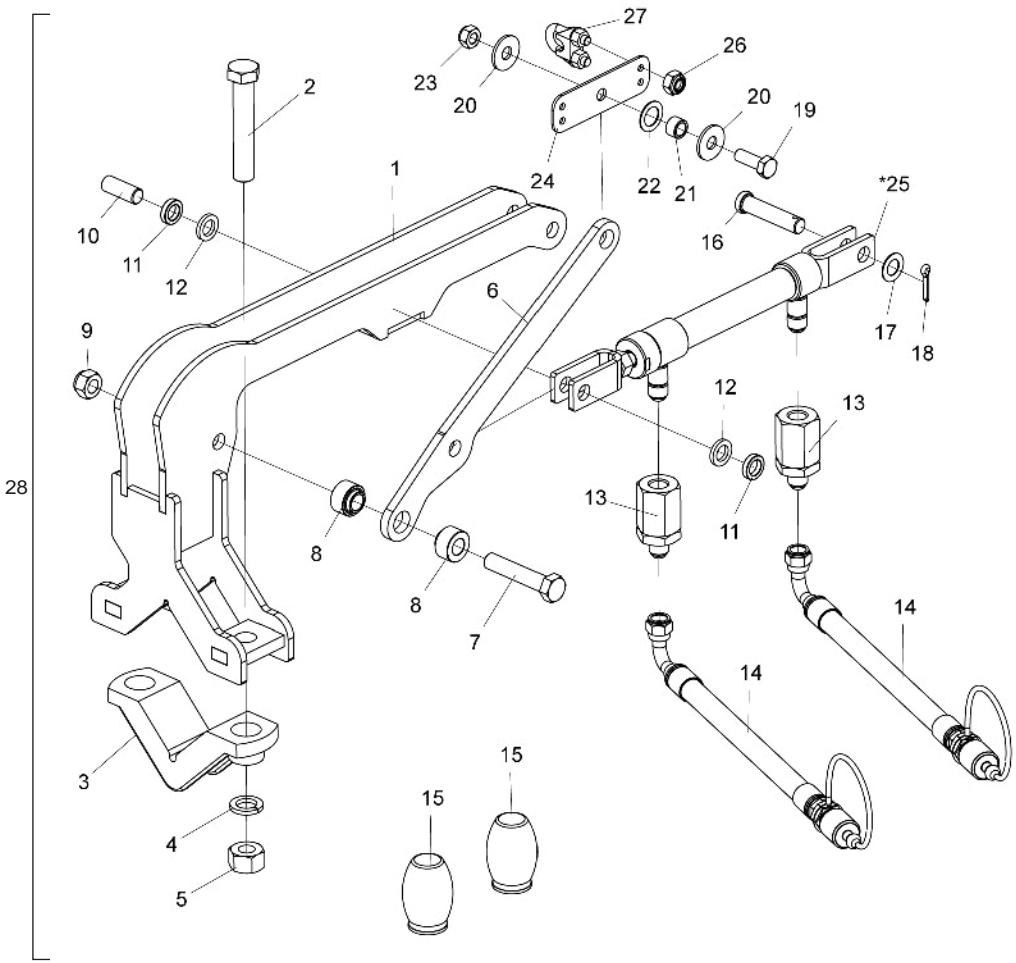

Item	Code	Product description	All
1	5530017731-9	Support Of Cylinder	1
2	6020310352-5	Hexagonal Head Bolt M20 X 2,50 X 110mm Cl8.8 Rp	2
3	6010600770-8	Clamp	1
4	6020010403-2	Pressure Washer M20 Media	2
5	6020310770-9	Hexagonal Nut 3/4" 10F Unc Gr5 Ch.1.7/32" Height 18,50mm	2
6	5008010262-0	Row Marker Thrust Handle	1
7	6020310186-7	Hexagonal Head Bolt M16 X 2,00 X 80mm Cl8.8 Rp	1
8	5080011974-7	Support Bushing	2
9	6020317443-0	Self-Locking Nut With Nylon M16 X 2,00 Ma Cl8 Ch.24mm H.16,00mm	1
10	5432010925-9	Flat Pin Ø5/8" X 42mm	1
11	5024010372-6	Smooth Washer Ø16 X Ø25 X 6,00mm	2
12	5024010316-5	Smooth Washer Ø16,4 X Ø26,5 X 4,00mm	2
13	5412010402-3	Reductor Nipple Ø0,4mm Screw 3/4" 16F Jic	2
14	5372011612-6	Hose Ø3/8" W/1Trf And 1Tcg X 1900mm	2
15	6020030170-9	Absorver Shock	2
16	6020310942-6	Round Head Pin Ø5/8" X 65mm	1
17	5024010059-0	Smooth Washer Ø16,5 X Ø29 X 1,21mm	1
18	6020050104-0	Cotterpin 3/16" X 1"	1
19	6020310439-4	Hexagonal Head Bolt M12 X 1,75 X 35mm Cl8.8 Rt	1
20	5024010068-9	Smooth Washer Ø13,3 X Ø35,5 X 3,00mm	2
21	5080020190-7	Bushing Of Ø13 X Ø19 X 12mm	1
22	5024010160-0	Smooth Washer Ø20 X Ø31 X 1,21mm	1
23	6020310847-0	Self-Locking Nut With Nylon M12 X 1 ,75 Ma Cl8 Ch.19mm H.12,00mm	1
24	5136018704-0	Fixing Plate	1
*25	6020059191-0	Hydraulic Cylinder "D.A" Ø1/2" X Ø1" X 150mm(Course) X 393mm(Closed)	1
26	6020317442-2	Self-Locking Nut With Nylon Low M6 X 1,00 Ma Cl8 Ch.10mm H.6,00mm	4
27	6020130291-1	Crosby Clamp For 5/16" Steel Cable	2
28	5528011049-2	Hydraulic System For Row Marker For PLB	1

* Item 25 - See page 14

• Complete Cover Disc

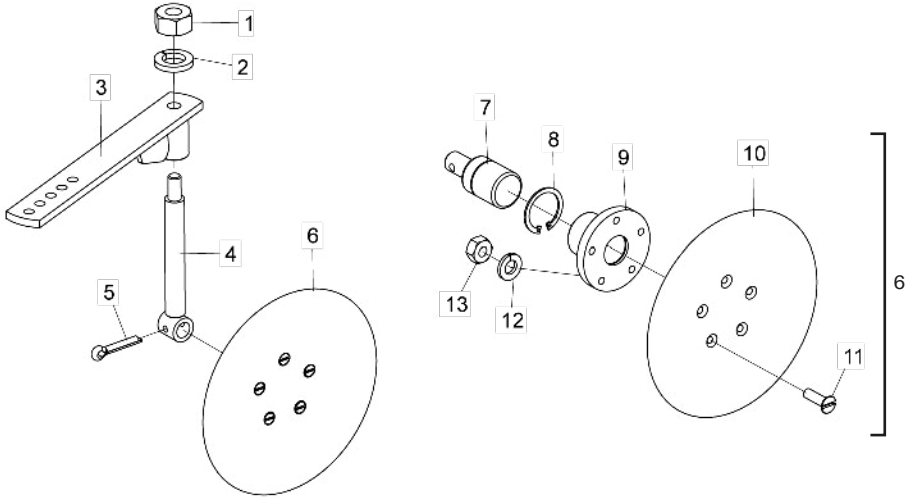

Item	Code	Product description	All
1	6020310820-9	Hexagonal Nut M12 X 1,75 Ma Cl8 Ch.19Mm H.10,00Mm	1
2	6020010395-8	Pressure Washer M12 Media	1
3	5072010004-2	Arm Of Disc	1
4	5232012001-2	Shaft Of Cover Disc	1
5	6020050113-9	Cotterpin 1/4" X 1.1/4"	1
6	5204020013-4	Complete Hub With Cover Disc	1
7	6020350045-1	Bearing F110053-1 With Hole 1/4"	1
8	6020010282-0	Retention Oring I-30 G502-030-01	1
9	5204010022-9	Cover Disc Hub	1
10	2644346501-3	Concave Plain Disc Blade 8.1/2 X 3,00 5H Rd 7Mm R=32,5Mm Single Bevel	1
11	6020310388-6	Simple Slotted Plain Head Bolt (Thread Machined) M6 X 1,00 X 20Mm Cl8.8 Rt	5
12	6020010122-0	Pressure Washer	5
13	6020311257-5	Hexagonal Nut M6 X 1,00 Ma Cl8 Ch.10Mm H.5,00Mm	5

• Complete Depth Wheel

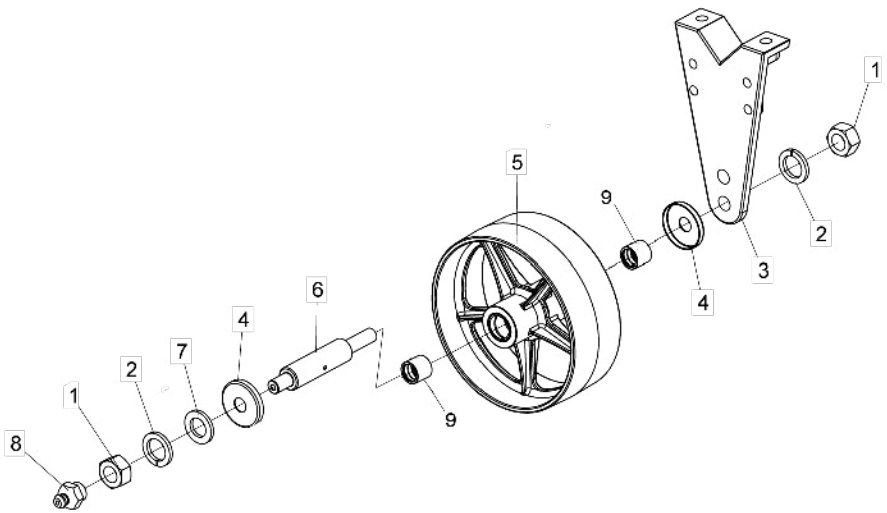

Item	Code	Product description	All
1	6020310457-2	Hexagonal Nut M24 X 3,00 Ma Cl8 Ch.36Mm H.19,00Mm	2
2	6020010196-3	Pressure Washer M24 Media	2
3	5530400013-8	Wheel Support	1
4	5096010011-2	Protective Cap Of Shaft	2
5	5498010254-0	Deph Wheel	1
6	5232011995-2	Depth Wheel Shaft	1
7	5024010039-5	Smooth Washer Ø26,2 X Ø44 X 4,75Mm	1
8	6020130108-7	Grease Fitting 1/8"	1
9	5080010311-5	Bronze Bushing	2

• Double Disc (Fertilizer)

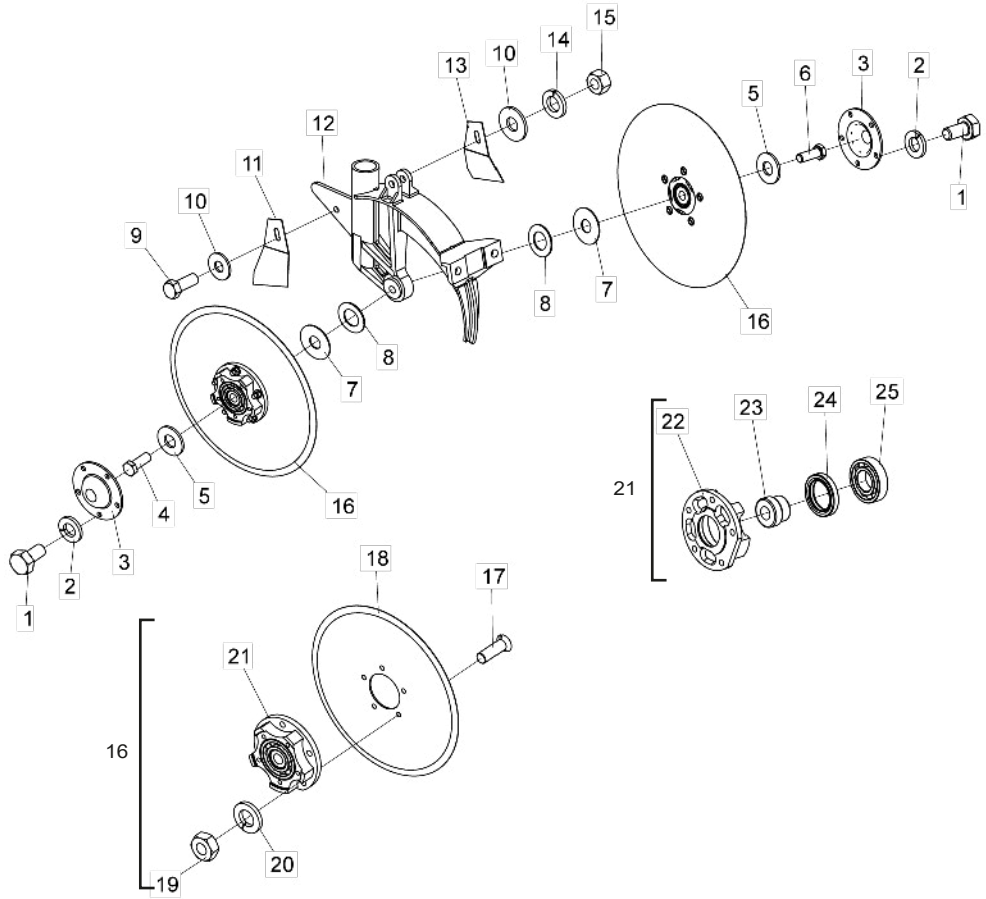

Item	Code	Product description	All
1	6020311000-9	Hexagonal Head Bolt 1/4" X 1/2" 20F Unc1A Gr5 Rt	10
2	6020010402-4	Pressure Washer 1/4" Media Industry	10
3	5096030002-2	Cover Of Double Disc Hub	2
4	6020311074-2	Hexagonal Head Bolt 5/8" X 1.3/4" 11F Unc1A Gr5 Rp	1
5	5024010239-8	Smooth Washer Ø16,5 X Ø37 X 3,00Mm	2
6	6020311073-4	Hexagonal Head Bolt 5/8" X 1.3/4" 11F Unc1A Gr5 Rp	1
7	5024010051-4	Smooth Washer Ø16 X Ø44 X 1,21Mm	2
8	5024010059-0	Smooth Washer Ø16,5 X Ø29 X 1,21Mm	4
9	6020310452-1	Hexagonal Head Bolt M10 X 1,50 X 25Mm Cl8.8 Rt	1
10	5024010075-1	Smooth Washer Ø10,3 X Ø25 X 2,00Mm	2
11	5352030047-0	Right Scraper Of Discs	1
12	5112020017-1	Double Disc Housing	1
13	5352030048-8	Left Scraper Of Discs	1
14	6020010394-0	Pressure Washer M10 Media	1
15	6020310822-5	Hexagonal Nut M10 X 1,50 Ma Cl8 Ch.17Mm H.8,00Mm	1
16	5204010348-1	Complete Hub (Plain Disc Ø13" X 3,00Mm) 5 Holes	2
17	6020310235-9	Plain Head Bolt M8 X 1,25 X 25Mm Cl8.8 Rt	10
18	2853346539-2	Coulter Plain Disc Blade 13 X 3,00 Hc Rd 68,6Mm + 5H Rd 8,8Mm R=47,5Mm Single Bevel	2
19	6020310454-8	Hexagonal Nut M8 X 1,25 Ma Cl8 Ch.13Mm H.6,50Mm	10
20	6020010004-5	Pressure Washer M8 Media	10
21	5204020094-0	Assembled Hub	2
22	5204020026-6	Double Disc Hub (Spare)	2
23	5080010042-6	Bushing	2
24	6020350259-4	Retainer Ø35,00 X Ø50,00 X 8,00Mm	2
25	6020350020-6	Bearing 6206	2

• Double Disc (Seed)

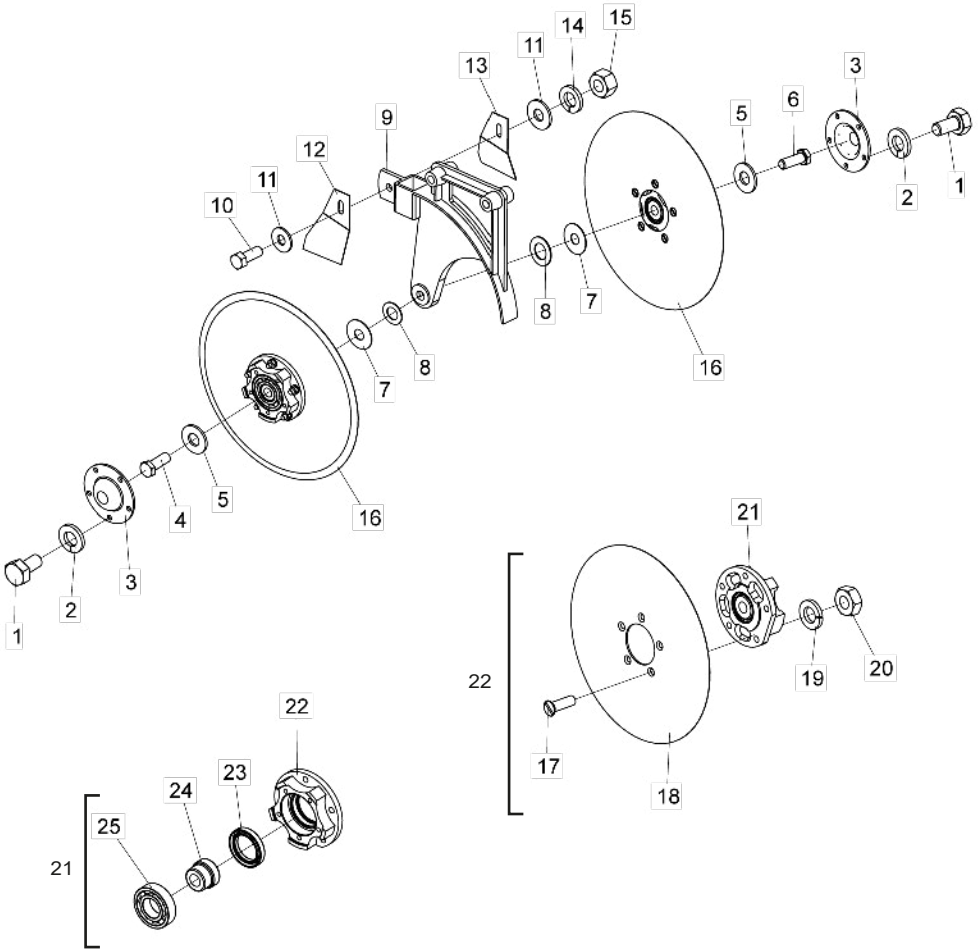

Item	Code	Product description	All
1	6020311000-9	Hexagonal Head Bolt 1/4" X 1/2" 20F Unc1A Gr5 Rt	10
2	6020010402-4	Pressure Washer 1/4" Media Industry	10
3	5096030002-2	Cover Of Double Disc Hub	2
4	6020311074-2	Hexagonal Head Bolt 5/8" X 1.3/4" 11F Unc1A Gr5 Rp	1
5	5024010239-8	Smooth Washer Ø16,5 X Ø37 X 3,00Mm	2
6	6020311073-4	Hexagonal Head Bolt 5/8" X 1.3/4" 11F Unc1A Gr5 Rp	1
7	5024010051-4	Smooth Washer Ø16 X Ø44 X 1,21Mm	2
8	5024010059-0	Smooth Washer Ø16,5 X Ø29 X 1,21Mm	4
9	5530410050-7	Support Of Double Disc For Seed (Conventional)	1
10	6020310452-1	Hexagonal Head Bolt M10 X 1,50 X 25Mm Cl8.8 Rt	1
11	5024010075-1	Smooth Washer Ø10,3 X Ø25 X 2,00Mm	2
12	5352030047-0	Right Scraper Of Discs	1
13	5352030048-8	Left Scraper Of Discs	1
14	6020010394-0	Pressure Washer M10 Media	1
15	6020310822-5	Hexagonal Nut M10 X 1,50 Ma Cl8 Ch.17Mm H.8,00Mm	1
16	5204010348-1	Complete Hub (Plain Disc Ø13" X 3,00Mm) 5 Holes	2
17	6020310235-9	Plain Head Bolt M8 X 1,25 X 25Mm Cl8.8 Rt	10
18	2853346539-2	Coulter Plain Disc Blade 13 X 3,00 Hc Rd 68,6Mm + 5H Rd 8,8Mm R=47,5Mm Single Bevel	2
19	6020010004-5	Pressure Washer M8 Media	10
20	6020310454-8	Hexagonal Nut M8 X 1,25 Ma Cl8 Ch.13Mm H.6,50Mm	10
21	5204020094-0	Assembled Hub	2
22	5204020026-6	Double Disc Hub	2
23	6020350259-4	Retainer Ø35,00 X Ø50,00 X 8,00Mm	2
24	5080010042-6	Bushing Of Rim	2
25	6020350020-6	Bearing 6206	2

• Cutting Disc

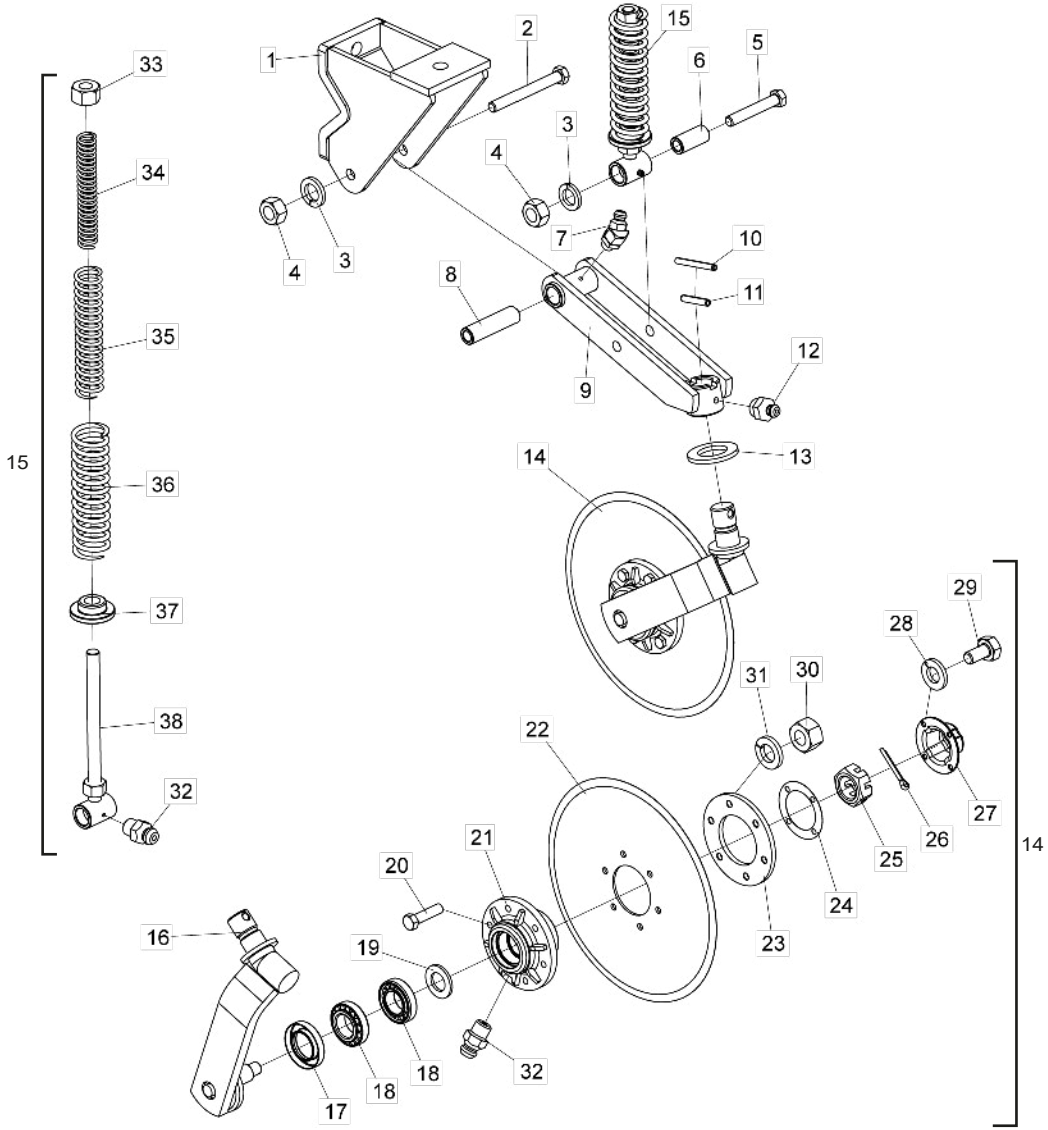

Item	Code	Product description	All	Smooth Plain Disc	Rippled Plain Disc
1	5530010049-9	Upper Support Of Coulter Disc	1		
2	6020310164-6	Hexagonal Head Bolt M16 X 2,00 X 140Mm Cl8.8 Rp	1		
3	6020010124-6	Pressure Washer M16 Media	2		
4	6020310818-7	Hexagonal Nut M16 X 2,00 Ma Cl8 Ch.24Mm H.13,00Mm	2		
5	6020310150-6	Hexagonal Head Bolt M16 X 2,00 X 100Mm Cl8.8 Rp	1		
6	5080020661-5	Bushing Of Ø16,2 X Ø26,5 X 57Mm	1		
7	6020130104-4	Grease Fitting 1/4"	1		
8	5080010195-3	Bushing Of Ø16,2 X Ø26,5 X 99Mm	1		
9	5530010050-2	Support Of Coulter Disc	1		
10	6020310472-6	Heavy Elastic Pin Ø6 X 55Mm		1	
11	6020310510-2	Heavy Elastic Pin Ø10 X 55Mm	1		
12	6020130108-7	Grease Fitting 1/8"	1		
13	5024010107-3	Smooth Washer Ø36 X Ø61 X 5,00Mm	1		
14	5124010023-5	Row Planter (Plain Disc Blade 14" X4Mm)		1	
14	5124010317-0	Row Planter (Rippled Plain Disc Blade 14"X4Mm)			1
15	5484010004-1	Complete Spring Regulator	1		
16	5530016348-2	Support W/Shaft Of Disc	2		
17	6020350244-6	Retainer Ø35,00 X Ø58,00 X 10,00Mm	2		
18	6020350077-0	Bearing 44610/49	4		
19	5024010024-7	Smooth Washer Ø20 X Ø38 X 1,21Mm		1	
20	6020310980-9	Hexagonal Head Bolt M10 X 1,50 X 40Mm Cl8.8 Rt		6	
20	6020310560-9	Hexagonal Head Bolt M8 X 1,25 X 35Mm Cl8.8 Rt			6
21	5204010499-2	Disc Hub	2		
22	2855397388-2	Coulter Plain Disc Blade 14 X 4,00 Hc Rd 80Mm + 6H Rd 10,3Mm D-115Mm Doble Bevel		1	
22	3255397203-4	Rippled Plain Disc Blade 14 X 4,00 Hc Rd 80Mm + 6H Rd 8,7Mm D=115Mm Doble Bevel			1
23	5284010001-4	Flange Of Disc Hub	2		
24	6020190098-3	Gascket Ø50,3 X Ø73,5 X 1/64"	2		
25	6020310780-6	Nut M20 X 2,50 Ma Cl8 Ch.30Mm H.16,00Mm Without Crown	2		
26	6020050101-5	Cotterpin 1/8" X 1"	2		
27	6020050640-8	Hub Cap	2		
28	6020010122-0	Pressure Washer M6 Media	8		
29	6020310291-0	Hexagonal Head Bolt M6 X 1,00 X 15Mm Cl8.8 Rt	8		
30	6020310822-5	Hexagonal Nut M10 X 1,50 Ma Cl8 Ch.17Mm H.8,00Mm		6	
30	6020310454-8	Hexagonal Nut M8 X 1,25 Ma Cl8 Ch.13Mm H.6,50Mm			6
31	6020010394-0	Pressure Washer M10 Media		6	
31	6020010124-6	Pressure Washer M16 Media			6
32	6020130100-1	Grease Fitting 1/4"	3		
33	6020310784-9	Hexagonal Nut 3/4" 10F Unc Gr5 Ch.1.1/4" Height 11,00Mm	1		
34	6020250208-6	Helical Spring Ø21 X Ø29 X 180Mm Wire=Ø4Mm Internal	1		
35	6020250206-0	Helical Spring Ø30,5 X Ø41,5 X 200Mm Wire=Ø5,5Mm	1		
36	6020250207-8	Helical Spring Ø43,5 X Ø57,5 X 200Mm Wire=Ø7Mm External	1		
37	6010600980-8	Back Bushing	1		
38	5232010030-5	Regulating Shaft With Bushing	1		

• Furrower W/ Complete Support

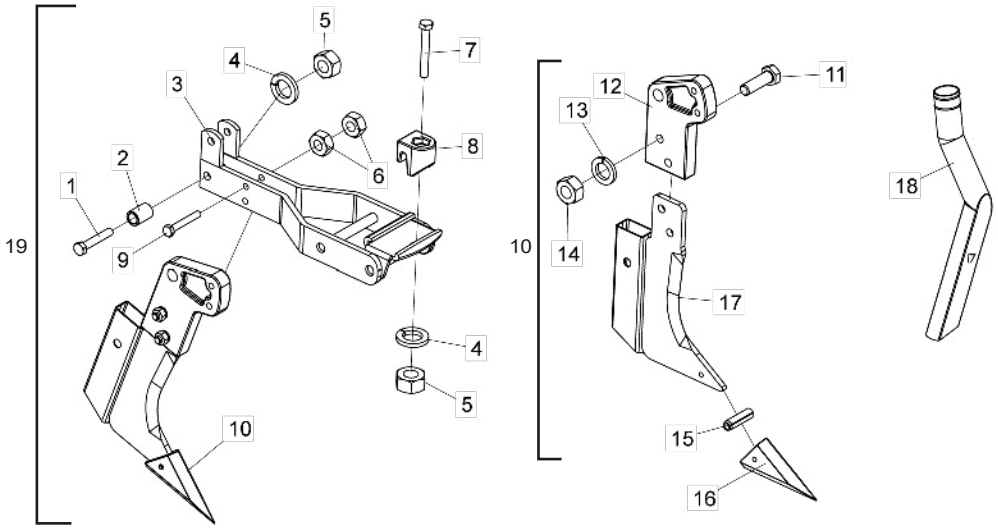

Item	Code	Product description	All
1	6020310978-7	Hexagonal Head Bolt M12 X 1,75 X 70Mm Cl8.8 Rt	1
2	5080010016-7	Articulation Bushing	1
3	5530010048-0	Support Of Forrower	1
4	6020010395-8	Pressure Washer M12 Media	2
5	6020310820-9	Hexagonal Nut M12 X 1,75 Ma Cl8 Ch.19Mm H.10,00Mm	2
6	6020310822-5	Hexagonal Nut M10 X 1,50 Ma Cl8 Ch.17Mm H.8,00Mm	2
7	6020317495-3	Hexagonal Head Bolt M12 X 1,75 X 90Mm Cl8.8 Rp	1
8	6010600896-8	Hitch Lock Of Discs Support	1
9	6020317444-9	Hexagonal Head Bolt M10 X 1,50 X 70Mm Cl8.8 Rt	1
10	5532010051-7	Furrower	1
11	6020310152-2	Hexagonal Head Bolt M12 X 1,75 X 40Mm Cl8.8 Rp	2
12	5530390016-0	Right Support	1
13	6020010395-8	Pressure Washer M12 Media	2
14	6020310820-9	Hexagonal Nut M12 X 1,75 Ma Cl8 Ch.19Mm H.10,00Mm	2
15	6020310490-4	Heavy Elastic Pin Ø8 X 28Mm	1
16	6010601364-3	Furrower Point	1
17	5532010039-8	Furrower Support	1
18	6020030118-0	Right Round Funnel	1
19	5532010050-9	Complete Furrower Of Tyne W/Support	1

Obs: The Furrower (19) is composed of all mentioned parts in this list, but when sold complete, the item 18 do no go together.

• Support W/Point

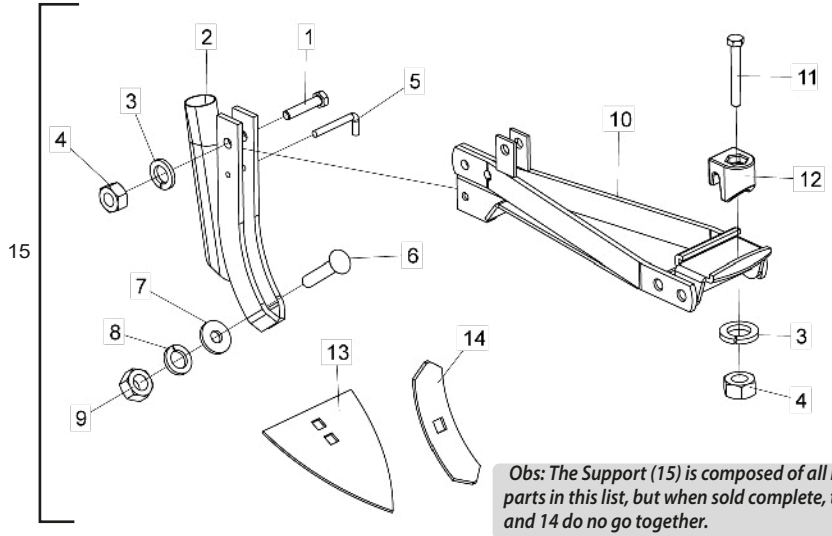

Obs: The Support (15) is composed of all mentioned parts in this list, but when sold complete, the itens 13 and 14 do no go together.

Item	Code	Product description	All
1	6020310210-3	Hexagonal Head Bolt M12 X 1,75 X 60Mm Cl8.8 Rt	1
2	5530080008-3	Support	1
3	6020010395-8	Pressure Washer M12 Media	2
4	6020310820-9	Hexagonal Nut M12 X 1,75 Ma Cl8 Ch.19Mm H.10,00Mm	2
5	5432020009-4	Pin "L" Ø6,8 X 26Mm	1
6	6020310273-1	French Head Bolt M16 X 2,00 X 80Mm Cl8.8 Rp	1
7	5024010298-3	Smooth Washer Ø17 X Ø44 X 4,75Mm(Galvanized)	1
8	6020010124-6	Pressure Washer M16 Media	1
9	6020310818-7	Hexagonal Nut M16 X 2,00 Ma Cl8 Ch.24Mm H.13,00Mm	1
10	5530014996-0	Support	1
11	6020317495-3	Hexagonal Head Bolt M12 X 1,75 X 90Mm Cl8.8 Rp	1
12	6010600896-8	Hitch Lock Of Discs Support	1
13	4708100005-7	Sweep 8" X 5,00Mm	1
14	4750100101-1	Sweep 8" X 2.1/4" X 5,00Mm	1
15	5530014999-4	Complete Support W/Point	1

• Seed Distributor Disc

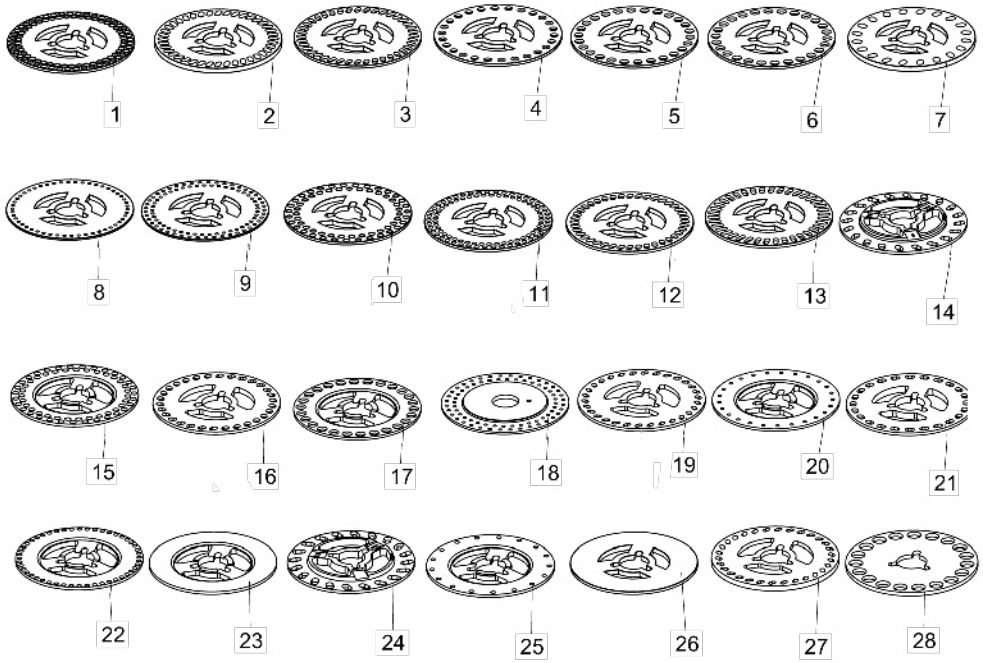

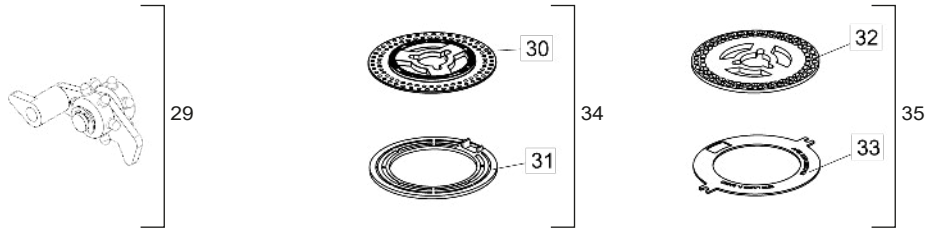

Item	Code	Product description	All
1	6020070009-3	Soy Beam Distributor Disc 90H Ø8,5Mm (Ø43 X Ø186 X 4,50Mm)	1
2	6020070002-6	Soy Beam Distributor Disc 40H 8 X 16Mm (Ø43 X Ø186 X 8,00Mm)	1
3	6020070080-8	Soy Beam Distributor Disc 40H 7,5 X 15Mm (Ø43 X Ø186 X 4,50Mm)	1
4	6020070072-7	Maize/Rice Distributor Disc 26H Ø11Mm (Ø43 X Ø186 X 4,50Mm)	1
5	6020070074-3	Maize/Rice Distributor Disc 26H Ø13Mm (Ø43 X Ø186 X 4,50Mm)	1
6	6020070070-0	Maize/Rice Distributor Disc 26H Ø13,5Mm (Ø43 X Ø186 X 4,50Mm)	1
7	6020070006-9	Beam Distributor Disc 20H 10 X 15Mm (Ø43 X Ø186 X 8,00Mm)	1
7	6020070102-2	Small Bean Distributor Disc 64H 8,5 X 13Mm (Ø43 X Ø186 X 5,50Mm)	1
7	6020070103-0	Sunflower Distribitor Disc 72H 7,5 X 12,5Mm (Ø43 X Ø186 X 5,50Mm)	1
8	6020070082-4	Sorgum Distributor Disc 50H Ø4,8Mm (Ø43 X Ø186 X 3,00Mm)	1
9	6020070087-5	Soy/Sorgum Distributor Disc 90H Ø5Mm (Ø43 X Ø186 X 3,00Mm)	1
10	6020070007-7	Soy Distributor Disc 62H Ø8,5Mm (Ø43 X Ø186 X 4,50Mm)	1
11	6020070086-7	Soy Beam Distributor Disc 90H Ø7Mm (Ø43 X Ø186 X 4,50Mm)	1
12	6020070088-3	Beam Distributor Disc 40H 8 X 13,5Mm (Ø43 X Ø186 X 4,50Mm)	1
13	6020070078-6	Soy Beam Distributor Disc 38H 7,5 X 18Mm (Ø43 X Ø186 X 4,50Mm)	1
14	5220020095-0	Sunflower Distributor Disc 20F 5,5 X 13Mm(Ø43 X Ø186 X 4,50Mm)	1
15	5220020096-9	Soy Beam Distributor Disc Double Rows 62H Ø9,5Mm(Ø43 X Ø186 X 4,50Mm)	1
15	6020070076-0	Soy Beam Distributor Disc 34H 10,5 X 15Mm (Ø43 X Ø186 X 4,50Mm)	1
15	6020070004-2	Soy Beam Distributor Disc 34H 10,5 X 15Mm (Ø43 X Ø186 X 8,00Mm)	1
16	5220020043-8	Seed Distributor Seed 30H 8,5 X 12Mm Cinza(Ø43 X Ø186 X 4,50Mm)	1
17	5220020078-0	Maize Distributor Disc 26H Ø13,49Mm(Ø43 X Ø186 X 4,00Mm)	1
17	6020071726-3	Maize Distribitor Disc 28H Ø9,0Mm (Ø43 X Ø186 X 4,50Mm)	1
17	5220020081-0	Popcorn Maize Distributor Disc 48H Ø7,14Mm(Ø43 X Ø186 X 4,00Mm)	1
17	6020070890-6	Sweet Maize Distributor Disc 29H 8 X 12,5Mm (Ø43 X Ø186 X 4,50Mm)	1
18	5220020035-7	Sorgum Distributor Disc Double Rows 72H Ø5,5Mm(Ø45 X Ø214 X 4,00Mm)	1
19	5220020101-9	Cotton Distributor Disc 30H 5,5 X 11Mm(Ø43 X Ø186 X 4,50Mm)	1
20	5220020079-9	Beetroot Distributor Disc 25H Ø5,56Mm(Ø43 X Ø186 X 4,00Mm)	1
20	5220020080-2	Beetroot Distributor Disc 25H Ø5,56Mm(Ø43 X Ø186 X 4,50Mm)	1
21	5220020046-2	Maize Distributor Disc 24H 9 X 14Mm(Ø43 X Ø186 X 4,50Mm)	1
22	5220020082-9	Popcorn Maize Distributor Disc 48H Ø7,14Mm(Ø43 X Ø186 X 4,50Mm)	1
23	5220020017-9	Seed Distributor Disc Without Hole (Ø43 X Ø186 X 8,00Mm)	1
24	5220020077-2	Sunflower Distributor Disc 20H 7 X 16Mm(Ø43 X Ø186 X 4,50Mm)	1
25	5220020030-6	Sorghum Distributor Disc 17H Ø7,14Mm(Ø43 X Ø186 X 4,50Mm)	1
26	6020070001-8	Seed Distributor Disc Without Hole (Ø43 X Ø186 X 4,50Mm)	1
27	5220020075-6	Cotton Distributor Disc 30H 5,5 X 11Mm(Ø43 X Ø186 X 7,90Mm)	1
28	6020070005-0	Peanut Distributor Disc 19H Ø20Mm (Ø43 X Ø193 X 6,00Mm)	1
29	6020130206-7	Trigger Cleaner	1
30	6020070087-5	Soy/Sorgum Distributor Disc 90H Ø5Mm (Ø43 X Ø186 X 3,00Mm)	1
31	6020010073-8	Plastic Ring Ø185 X 5Mm P/ Disco De Sorgo	1
32	6020070102-2	Small Bean Distributor Disc 64H 8,5 X 13Mm (Ø43 X Ø186 X 5,50Mm)	1
32	6020070103-0	Sunflower Distribitor Disc 72H 7,5 X 12,5Mm (Ø43 X Ø186 X 5,50Mm)	1
33	6020070140-5	Disc Ø128 X Ø185 X 2,50Mm	1
34	5220020037-3	Complete Sorghum Distributor Disc 90H Ø5Mm(Ø43 X Ø186 X 3,00Mm)	1
35	5220010002-6	Dry Beam Distributor Disc 64H 8,5 X 13Mm(Ø43 X Ø186 X 5,50Mm) With Ring	1
35	5220010001-8	Small Beam Distributor Disc 72H 7,5 X 12,5Mm(Ø43 X Ø186 X 5,50Mm) With Ring	1

• Peanut Seed Kit

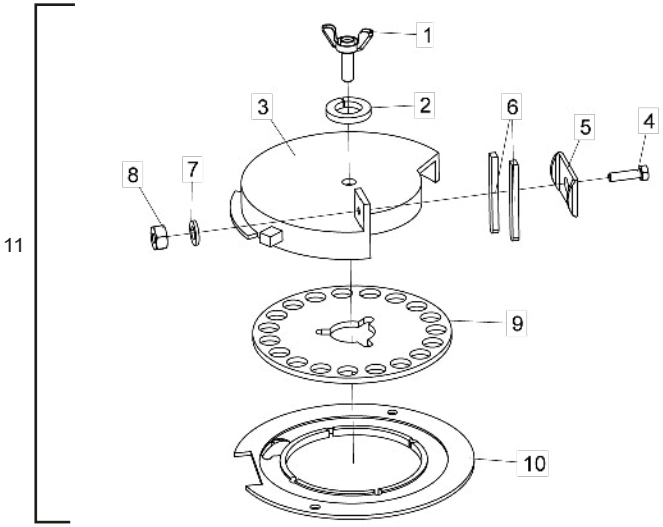

Item	Code	Product description	All
1	5420110002-2	Bolt 1/2"	1
2	6020010410-5	Pressure Washer 1/2" Media Industry	1
3	5484060002-8	Internal Regulator For Peanut	1
4	6020310019-4	Hexagonal Head Bolt 1/4" X 1" 20F Unc1A Gr2 Rt	1
5	5460040003-0	Clamp	1
6	5212010001-7	Seed Drop Plastiprene	2
7	6020010402-4	Pressure Washer 1/4" Media Industry	1
8	6020310742-3	Hexagonal Nut 1/4" 20F Unc Gr5 Ch.7/16" Height 5,50Mm	1
9	6020070005-0	Peanut Distributor Disc 19F Ø20Mm (Ø43 X Ø193 X 6,00Mm)	1
10	5220010045-0	Metallic Dual Side Disc For Peanut Seeds (Ø132 X Ø233,2 X 7,50Mm)	1
11	5528010691-6	Conversion System For Peanut Planting With Disc 19F Ø20Mm	1

• Sprockets

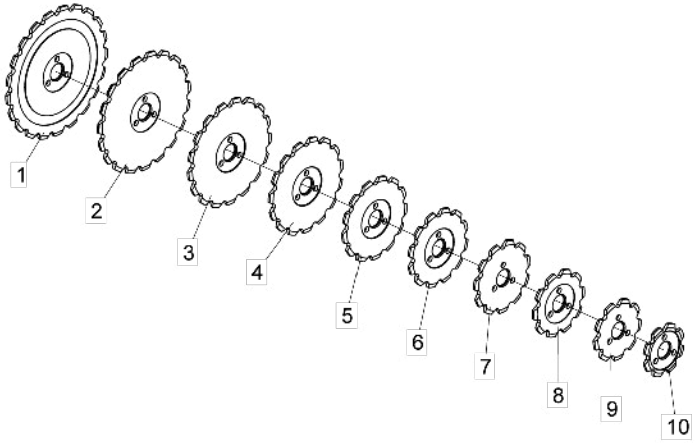

Item	Code	Product description	All
1	5256030021-2	Sprocket 21 Teeth	1
2	5256030019-0	Sprocket 19 Teeth	1
3	5256030018-2	Sprocket 17 Teeth	1
4	5256030013-1	Sprocket 15 Teeth	1
5	5256030010-7	Sprocket 13 Teeth	1
6	5256030012-3	Sprocket 12 Teeth	1
7	5256030030-1	Sprocket 11 Teeth	1
8	5256030003-4	Sprocket 10 Teeth	1
9	5256030029-8	Sprocket 9 Teeth	1
10	5256030006-9	Sprocket 8 Teeth	1

• Furrower Without Support For Fertilizer Conductor - Optional

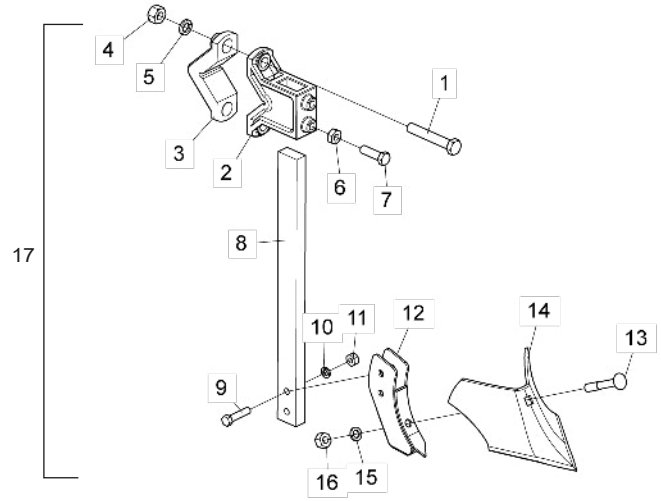

Item	Code	Product description	All
1	6020311101-3	Parafuso Cab.Sextavada 3/4" X 4.1/2" 10F Unc1A Gr5 Rp(Bicromatizado)	2
2	5530014631-6	Suporte De Fixação Do Sulcador	1
3	6010600770-8	Braçadeira	1
4	6020310770-9	Porca Sextavada 3/4" 10F Unc Gr5 Ch.1.7/32" Alt.18,50mm (Bicromatizado)	2
5	6020010414-8	Arruela De Pressão 3/4" Média Industrial(Bicromatizado)	2
6	6020310738-5	Porca Sextavada 5/8" 11F Unc Gr5 Ch.1.1/16" Alt.11,00mm (Bicromatizado)	2
7	6020311043-2	Parafuso Cab.Sextavada 5/8" X 2.1/4" 11F Unc1A Gr5 Rt C/Ponta(Bicromatizado)	2
8	5040120009-3	Barra Da Haste	1
9	6020312060-8	Parafuso Cab.Sextavada 1/2" X 2.1/4" 12F W Gr5 Rp(Bicromatizado)	2
10	6020010410-5	Arruela De Pressão 1/2" Média Industrial(Bicromatizado)	2
11	6020310754-7	Porca Sextavada 1/2" 12F W Gr5 Ch.7/8" Alt.12,00mm (Bicromatizado)	2
12	5530014632-4	Suporte Do Sulcador	1
13	6020311182-0	Parafuso Cab.Francesa 5/8" X 4" 11F Unc Gr5 Rp-38,1mm(Bicromatizado)	1
14	4708140005-5	Bico Sulcador 9" X 4,75mm	1
15	6020010412-1	Arruela De Pressão 5/8" Média Industrial(Bicromatizado)	1
16	6020310760-1	Porca Sextavada 5/8" 11F Unc Gr5 Ch.1.1/16" Alt.15,00mm (Bicromatizado)	1
17	5532010188-2	Sulcador Completo	1

• Furrower With Support For Fertilizer Conductor - Optional

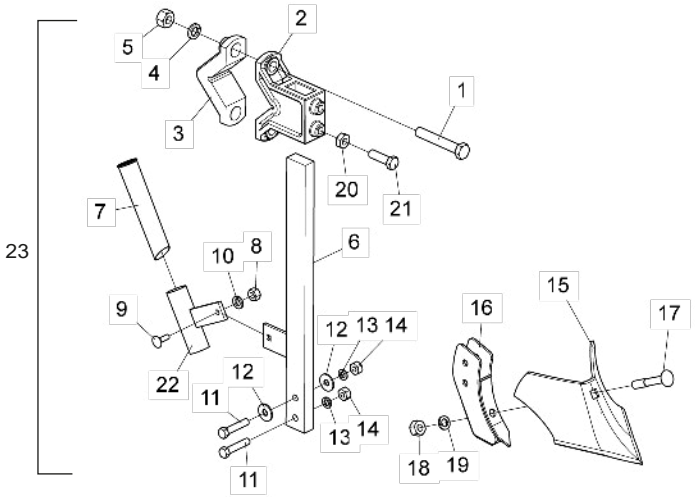

Item	Code	Product description	All
1	6020311101-3	Parafuso Cab.Sextavada 3/4" X 4.1/2" 10F Unc1A Gr5 Rp(Bicromatizado)	2
2	5530014631-6	Suporte De Fixação Do Sulcador	1
3	6010600770-8	Braçadeira	1
4	6020010414-8	Arruela De Pressão 3/4" Media Industrial(Bicromatizado)	2
5	6020310770-9	Porca Sextavada 3/4" 10F Unc Gr5 Ch.1.7/32" Alt.18,50mm (Bicromatizado)	2
6	5326090002-8	Haste Do Sulcador	1
7	5052060023-7	Bica Do Adubo	1
8	6020310746-6	Porca Sextavada 3/8" 16F Unc Gr5 Ch.9/16" Alt.8,50mm (Bicromatizado)	1
9	6020311090-4	Parafuso Cab.Francesa 3/8" X 1.1/4" 16F Unc1A Gr2 Rt(Bicromatizado)	1
10	6020010406-7	Arruela De Pressão 3/8" Média Industrial(Bicromatizado)	1
11	6020312300-3	Parafuso Cab.Sextavada 1/2" X 2.1/2" 12F W Gr5 Rp(Bicromatizado)	2
12	5024010068-9	Arruela Lisa De Ø13,3 X Ø35,5 X 3,00mm	2
13	6020010410-5	Arruela De Pressão 1/2" Média Industrial(Bicromatizado)	2
14	6020310754-7	Porca Sextavada 1/2" 12F W Gr5 Ch.7/8" Alt.12,00mm (Bicromatizado)	2
15	4708140005-5	Bico Sulcador 9" X 4,75mm	1
16	5530080009-1	Suporte Do Sulcador	1
17	6020311182-0	Parafuso Cab.Francesa 5/8" X 4" 11F Unc Gr5 Rp-38,1mm(Bicromatizado)	1
18	6020310760-1	Porca Sextavada 5/8" 11F Unc Gr5 Ch.1.1/16" Alt.15,00mm (Bicromatizado)	1
19	6020010412-1	Arruela De Pressão 5/8" Média Industrial(Bicromatizado)	1
20	6020310738-5	Porca Sextavada 5/8" 11F Unc Gr5 Ch.1.1/16" Alt.11,00mm (Bicromatizado)	2
21	6020311069-6	Parafuso Cab.Sextavada 5/8" X 1.3/4" 11F Unc1A Gr5 Rt C/Ponta(Bicromatizado)	2
22	5530180016-8	Suporte Da Bica	1
23	5532020003-1	Sulcador Completo	1

• Stickers

Item	Código	Descrição do produto	Todos
1	6020070432-3	Sticker Plb-Directa Baldan(100 X 200mm)	-
2	6020071325-0	Sticker Plb-Directa Baldan(210 X 145mm)	-

Items 1 and 2 - The Stickers Quantity is according to the number of lines

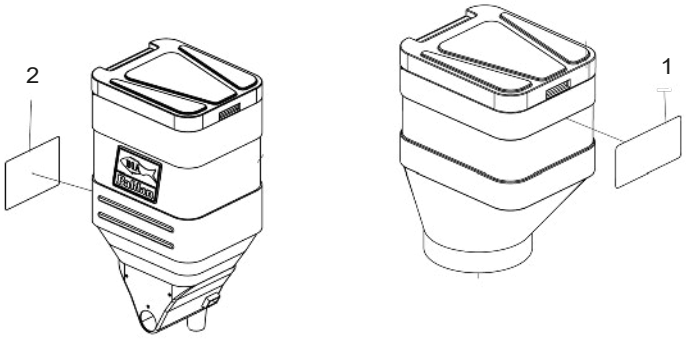

Item 1

Item 2

BALDAN

Avenida Baldan, 1500
Nova Matão
15.993-900
Matão/SP - Brasil
sac@baldan.com.br
export@baldan.com.br

+55 16 3221 6500
baldan.com.br