Parts Catalog

PLB DIRECTA

Baldan Line Seeder

BALDAN

Index

PLB Directa 4
Table PLB Directa 5
Row Planter 6
Row Planter W/ Iron Wheel Without Fertilizer Box 7
Row Planter W/ Iron Wheel W/ Fertilizer Box 7
Row Planter W/ Rubber Wheel Without Fertilizer Box - Optional 8
Row Planter W/ Rubber Wheel W/ Fertilizer Box - Optional 8
Row Planter W/ Compactation Wheel Without Fertilizer Box 9
Table Row Planter W/ Compactation Wheel Without Fertilizer Box 10
Row Planter W/ Compactation Wheel W/ Fertilizer Box 11
Table Row Planter W/ Compactation Wheel W/ Fertilizer Box 12
Row Planter Titanium - Optional 13
Table Row Planter Titanium - Optional 14
Cart With Universal System/Fertisystem - Optional 15
Table Cart With Universal System/Fertisystem - Optional 16
Complete Lower Chain Protection 17
Complete Superior Current Protection 17
Fertilizer Box - Baldan System 18
Fertilizer Box - Fertisystem Doser 19
Seed Box - Baldan System 20
Seed box - Universal System 21
Distributor Base Seed - Titanium 22
Hydraulic System For Row Marker - Optional 23
Complete Rubber Compactor Wheel - Optional 24
Line Marker Hydraulic Cylinder 24
Complete Cover Disc 25
Complete Depth Wheel 25
Double Disc (Fertilizer) 26
Double Disc (Seed) 27
Cutting Disc 28
Furrower W/ Complete Support 29
Support W/Point 29
Distributor Discs - Baldan System 30
Distributor Discs - Universal System 31
Distributor Discs - Titanium System - Optional 32
Gears 32
Furrower Without Support For Fertilizer Conductor - Optional 33
Furrower With Support For Fertilizer Conductor - Optional 33
Conversion System for Peanut Planting - Optional 34
Stickers until 04/2023 34
Stickers from 05/2023 35

BALDAN

• PLB Directa

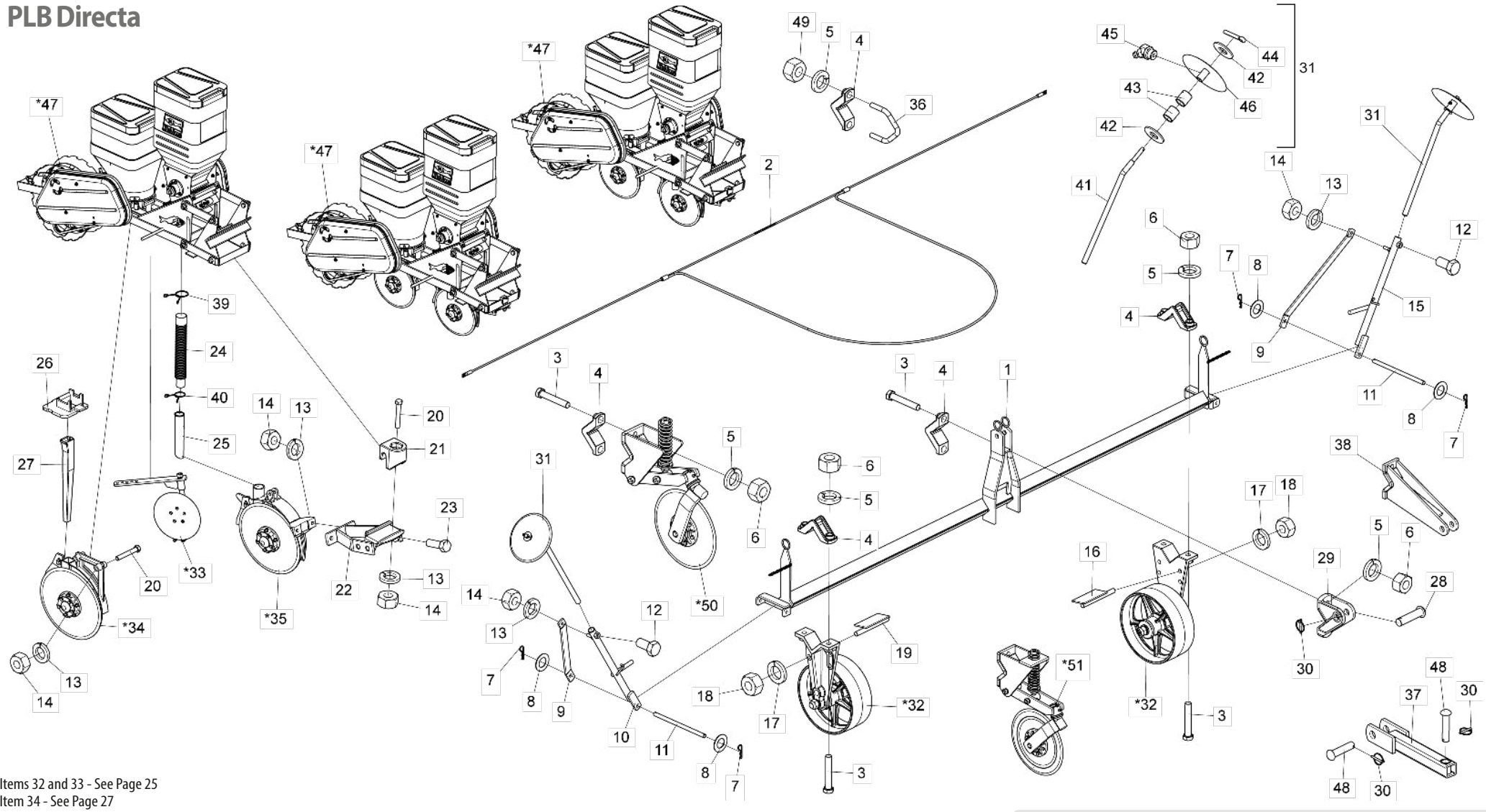

* Items 32 and 33 - See Page 25
* Item 34 - See Page 27
* Item 35 - See Page 26
* Item 47 - See Page 7 and 8
* Items 49 and 50 - See Page 28

Illustrative images

Note: Items 33, 34, 35 and the items they make up are on page 6 (Full Line)

Note: When the product comes out with Cutting Disc, items 37 and 38 will accompany it.

• Table PLB Directa

Item	Code	Product description	All	2 lines	3 lines	4 lines	5 lines	6 lines
1	5084050007-9	Tool Bar Of 1800mm		1				
1	5084010022-4	Tool Bar Of 2300mm		1				
1	5084050008-7	Tool Bar Of 2800mm		1				
1	5084010023-2	Tool Bar Of 3300mm		1				
1	5084010022-4	Tool Bar Of 2300mm			1			
1	5084050008-7	Tool Bar Of 2800mm			1			
1	5084010023-2	Tool Bar Of 3300mm			1			
1	5084050009-5	Tool Bar Of 3800mm			1			
1	5084010105-0	Tool Bar Of 4396mm			1			
1	5084010022-4	Tool Bar Of 2300mm				1		
1	5084050008-7	Tool Bar Of 2800mm				1		
1	5084010023-2	Tool Bar Of 3300mm				1		
1	5084050009-5	Tool Bar Of 3800mm				1		
1	5084010105-0	Tool Bar Of 4396mm				1		
1	5084010022-4	Tool Bar Of 2300mm					1	
1	5084050008-7	Tool Bar Of 2800mm					1	
1	5084010023-2	Tool Bar Of 3300mm					1	
1	5084050009-5	Tool Bar Of 3800mm					1	
1	5084010105-0	Tool Bar Of 4396mm					1	
1	5084010023-2	Tool Bar Of 3300mm						1
1	5084050009-5	Tool Bar Of 3800mm						1
1	5084010105-0	Tool Bar Of 4396mm						1
2	6020058441-7	Complete Hope For Drawbar 1800mm		1				
2	6020058438-7	Complete Hope For Drawbar 2300mm		1				
2	6020058442-5	Complete Hope For Drawbar 2800mm		1				
2	6020058443-3	Complete Hope For Drawbar 3300mm		1				
2	6020058441-7	Complete Hope For Drawbar 1800mm			1			
2	6020058438-7	Complete Hope For Drawbar 2300mm			1			
2	6020058442-5	Complete Hope For Drawbar 2800mm			1			
2	6020058439-5	Complete Hope For Drawbar 3800mm			1			
2	6020058440-9	Complete Hope For Drawbar 4400mm			1			
2	6020058438-7	Complete Hope For Drawbar 2300mm				1		
2	6020058442-5	Complete Hope For Drawbar 2800mm				1		
2	6020058443-3	Complete Hope For Drawbar 3300mm				1		
2	6020058439-5	Complete Hope For Drawbar 3800mm				1		
2	6020058440-9	Complete Hope For Drawbar 4400mm				1		
2	6020058438-7	Complete Hope For Drawbar 2300mm					1	
2	6020058442-5	Complete Hope For Drawbar 2800mm					1	
2	6020058443-3	Complete Hope For Drawbar 3300mm					1	
2	6020058439-5	Complete Hope For Drawbar 3800mm					1	
2	6020058440-9	Complete Hope For Drawbar 4400mm					1	
2	6020058443-3	Complete Hope For Drawbar 3300mm						1
2	6020058439-5	Complete Hope For Drawbar 3800mm						1
2	6020058440-9	Complete Hope For Drawbar 4400mm						1
3	6020310352-5	Hexagonal Head Bolt M20 X 2,50 X 110mm Cl8.8 Rp	8					
4	6010600770-8	Clamp		8	10	12	14	16
5	6020010403-2	Pressure Washer M20 Media		16	20	24	28	32
6	6020311265-6	Hexagonal Nut M20 X 2,50 Ma Cl8 Ch.30mm H.16,00mm		8	8	8	8	16
7	6020390294-0	Nma Lock - Type "R" Ø3.5 X 67mm	4					
8	5024010059-0	Smooth Washer Ø16,5 X Ø29 X 1,21mm	4					

Item	Code	Product description	All	2 lines	3 lines	4 lines	5 lines	6 lines
9	5136120010-5	Lateral Plate Of Row Marker	2					
10	5436012318-1	Right Support Of Row Marker	1					
11	5432010024-3	Pin Of Ø5/8" X 275mm	2					
12	6020310279-0	Hexagonal Head Bolt M16 X 2,00 X 40mm Cl8.8 Rt Wth Point	2					
13	6020010395-8	Pressure Washer M12 Media		12	17	22	27	32
14	6020310820-9	Hexagonal Nut M12 X 1,75 Ma Cl8 Ch.19mm H.10,00mm		12	17	22	27	32
15	5436012319-0	Left Support Of Row Marker	1					
16	5352010072-1	Left Scraper Of Wheel	1					
17	6020010124-6	Pressure Washer M16 Media	2					
18	6020310818-7	Hexagonal Nut M16 X 2,00 Ma Cl8 Ch.24mm H.13,00mm	2					
19	5352010071-3	Right Scraper Of Wheel	1					
20	6020317495-3	Hexagonal Head Bolt M12 X 1,75 X 90mm Cl8.8 Rp		6	9	12	15	18
21	6010600896-8	Hitch Lock Of Discs Support		2	3	4	5	6
22	5530180062-1	Support Of Front Double Disc		2	3	4	5	6
23	6020310152-2	Hexagonal Head Bolt M12 X 1,75 X 40mm Cl8.8 Rp		4	6	8	10	12
24	6020250111-0	Rubber Tube Ø38 X Ø50,8 X 400mm		2	3	4	5	6
25	6020250048-2	Fertilizer Funnel (2448) C/Recorte 205mm		2	3	4	5	6
26	6010601101-2	Plastic Support		2	3	4	5	6
27	6020030123-7	Square Funnel 385mm		2	3	4	5	6
28	6020310660-5	Pin Ø28 x 105mm	2					
29	6010601041-5	Tool Bar Hitch	2					
30	6020390293-2	Lock Ø5,75 X 40mm	2					
31	5386010001-7	Row Marker	2					
*32	5498010272-9	Depth Wheel	2					
*33	5220040001-1	Cover Disc		2	3	4	5	6
*34	5124030118-4	Row Planter W/Double Disc For Seed (Conv) Ø13" X 2,65mm		2	3	4	5	6
*35	5124030110-9	Double Disc		2	3	4	5	6
36	5068060004-7	Clamp R3/4" Unc		4	6	8	10	12
37	5272010015-0	Extension Of Cutting Disc	1					
38	5252010040-7	Tool Bar Hitch	2					
39	6020250339-2	Lock Spring		2	3	4	5	6
40	6020250322-8	Lock Spring		2	3	4	5	6
41	5232020035-0	Row Marker Shaft	2					
42	5024010142-1	Smooth Washer Ø20,3 X Ø46,5 X 3,00mm	4					
43	5080020830-8	Bushing Of Ø19,2 X Ø23,2 X 25,50mm	4					
44	6020050113-9	Cotterpin 1/4" X 1.1/4"	2					
45	6020130110-9	Grease Fitting 1/8"	2					
46	5220040003-8	Complete Row Marker Disc	2					
*47	5124010523-7	Row Planter With Iron Compactation Wheel - Conventional Planting		2	3	4	5	6
*47	5124010527-0	Row Planter With Iron Compactation Wheel - No Till		2	3	4	5	6
*47	5124010521-0	Row Planter With Iron Compactation Wheel - Conventional Planting Without Fertilizer Box		2	3	4	5	6
*47	5124010593-8	Complete Row With Iron Compactation Wheel - Right Planting Without Fertilizer Box		2	3	4	5	6
*47	5124010522-9	Complete Row Planter With Rubber Compactation Wheel - Conventional Planting		2	3	4	5	6
*47	5124010526-1	Complete Row Planter With Rubber Compactation Wheel - Right Planter		2	3	4	5	6
*47	5124010520-2	Complete Row Planter With Rubber Compactation Wheel - Conventional Planting Without Fertilizer Box		2	3	4	5	6
48	6020310595-1	French Head Pin Ø1" X 105mm	2					
49	6020310770-9	Hex Nut 3/4" 10F Unc Gr5 Ch.1.7/32" Alt.18.50mm		8	12	16	20	24
		Opcional						
*50	5124010318-8	Complete Coulter Disc Row (14"X4mm Rippled Plain Disc Blade)		2	3	4	5	6
*51	5124010022-7	Complete Coulter Disc Row (14"X4mm Plain)		2	3	4	5	6

BALDAN

• Row Planter

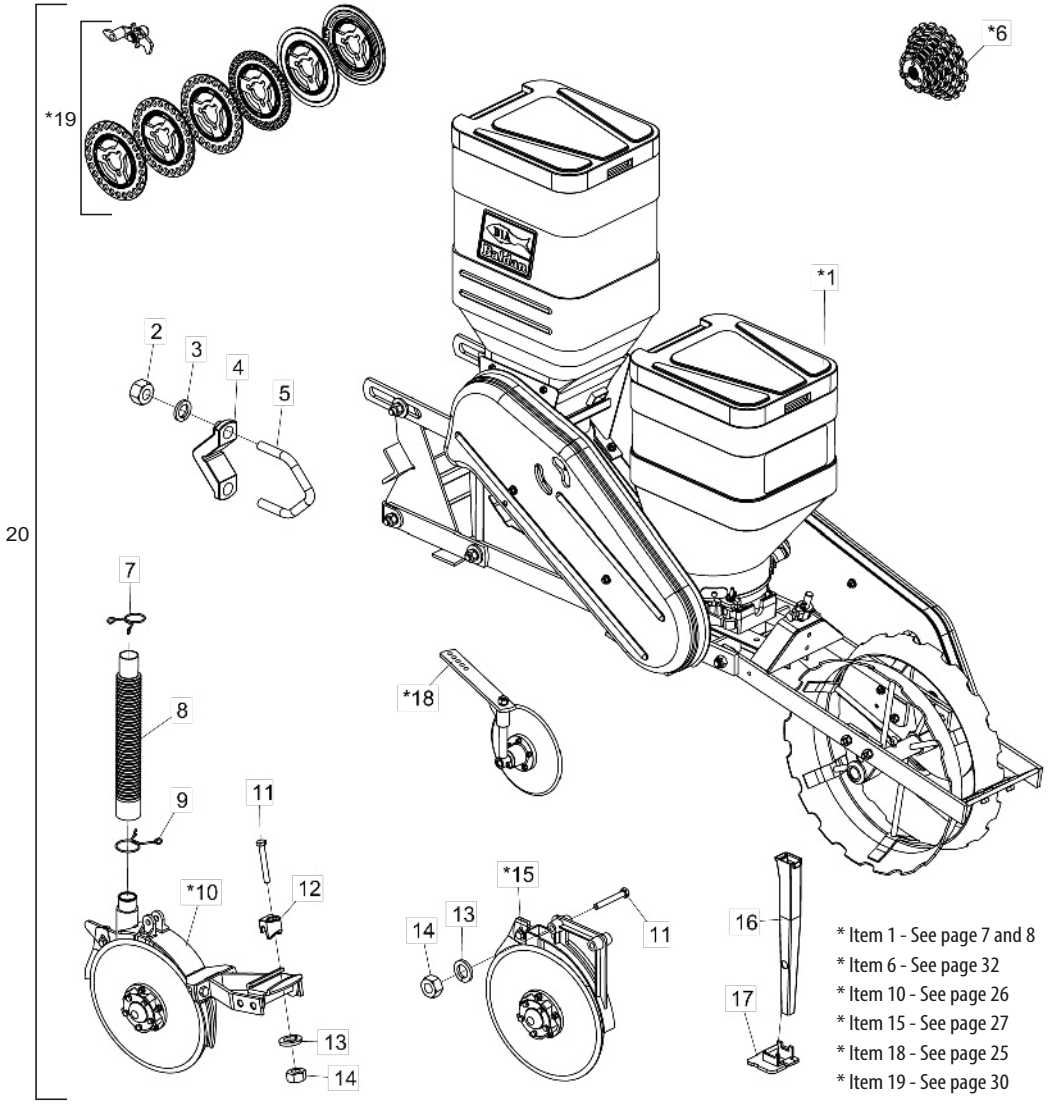

* Item 1 - See page 7 and 8
* Item 6 - See page 32
* Item 10 - See page 26
* Item 15 - See page 27
* Item 18 - See page 25
* Item 19 - See page 30

Item	Code	Product description	All	Iron for Conventional Planting	Rubber for Conventional Planting	Iron for Direct Planter	Rubber for Direct Planter	Iron for conv. Planter Without Fertilizer Hopper	Rubber for conv. Planter Without Fertilizer Hopper
*1	5124010523-7	Complete Row Planter With Iron Compactation Wheel - Conventional Planting		1					
*1	5124010522-9	Complete Row Planter With Rubber Compactation Wheel - Conventional Planting			1				
*1	5124010527-0	Complete Row Planter With Iron Compactation Wheel - No Till Planting				1			
*1	5124010526-1	Complete Row Planter With Rubber Compactation Wheel - No Till Planter					1		
*1	5124010521-0	Complete Row Planter W/ Iron Compactation Wheel - Conv. Planting Without Fertilizer Box						1	
*1	5124010520-2	Complete Row Planter W/ Rubber Compactation Wheel - Conv. Planting Without Fertilizer Box							1
2	6020310770-9	Hexagonal Nut 3/4" 10F Unc Gr5 Ch.1.7/32" Height 18,50Mm	4						
3	6020010414-8	Pressure Washer 3/4" Media Industry	4						
4	6010600770-8	Clamp	2						
5	5068060004-7	Clamp R3/4" Unc	2						
*6	5528010592-8	Sprockets For Plb		1	1	1	1		
*6	5528010442-5	Sprockets For Plb (Without Fertilizer)						1	1
7	6020250322-8	Lock Spring		1	1	1	1		
8	6020250111-0	Rubber Tube Ø38 X Ø50,8 X 400Mm (Hose 110)		1	1	1	1		
9	6020250339-2	Lock Spring		1	1	1	1		
*10	5124030111-7	Front Row Planter W/ Double Disc For Fertilizer		1	1	1	1		
11	6020317495-3	Hexagonal Head Bolt M12 X 1,75 X 90Mm Cl8.8 Rp		3	3	3	3	2	2
12	6010600896-8	Hitch Lock Of Discs Support		1	1	1	1		
13	6020010395-8	Pressure Washer M12 Media		3	3	3	3	2	2
14	6020310820-9	Hexagonal Nut M12 X 1,75 Ma Cl8 Ch.19Mm H.10,00Mm		3	3	3	3	2	2
*15	5124030118-4	Row Planter W/ Double Disc For Seed (Convex) Ø13" X 2,65Mm	1						
16	6020030123-7	Square Funnel 385Mm	1						
17	6010601101-2	Plastic Support	1						
*18	5220040001-1	Complete Cover Disc	1						
*19	5528010443-3	Seed Discs For Plb	1						
20	2517010743-0	Complete Row Unit W/Iron Wheel Compactation Conventional Planting		1					
20	2517010741-4	Complete Row Unit W/Rubber Compactation Wheel For Conventional Planting			1				
20	2517010742-2	Complete Row Unit W/Iron Wheel Compactation No Till				1			
20	2517010740-6	Complete Row Unit W/ Compactor Rubber Wheel For No Till					1		
20	2517010744-9	Complete Row Unit W/ Compactation Iron Wheel For Conv. Planting (Without Hopper)						1	
20	2517010745-7	Complete Row Unit W/ Compactation Rubber Wheel For Conventional Planting							1

• Row Planter W/ Iron Wheel Without Fertilizer Box

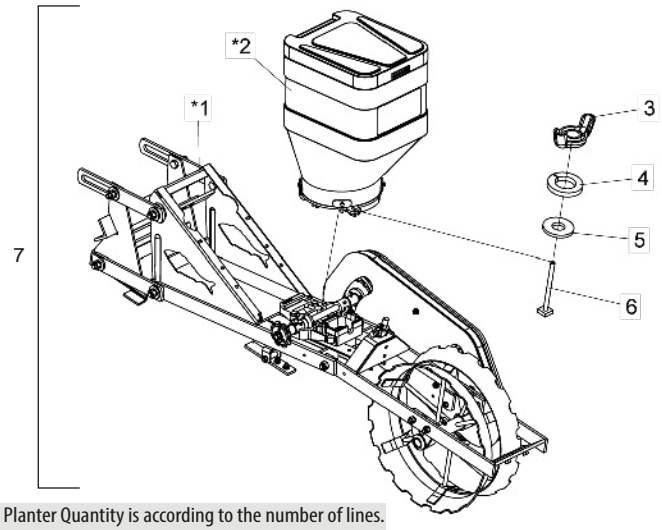

Item 7 - The Row Planter Quantity is according to the number of lines.

* Item 1 - See page 9
* Item 2 - See page 20

Item	Code	Product description	All
*1	5124100019-6	Row Planter W/ Iron Compactation Wheel For Conventional Planter Without Fertilizer Box	1
*2	5092010341-0	Seed Hopper 45Lt Complete(Red Ral 3020) Baldan System	1
3	6020310819-5	Nut M8 X 1,25	1
4	6020010004-5	Pressure Washer M8 Media	1
5	5024010073-5	Smooth Washer Ø8,5 X Ø20 X 2,00Mm	1
6	5420010102-5	Bolt M8 X 97Mm	1
7	5124010521-0	Complete Row Planter With Iron Compactation Wheel - Conventional Planting Without Fertilizer Box	-
7	5124010593-8	Complete Row Planter With Iron Compactation Wheel - Right Planting Without Fertilizer Box	-

• Row Planter W/ Iron Wheel W/ Fertilizer Box

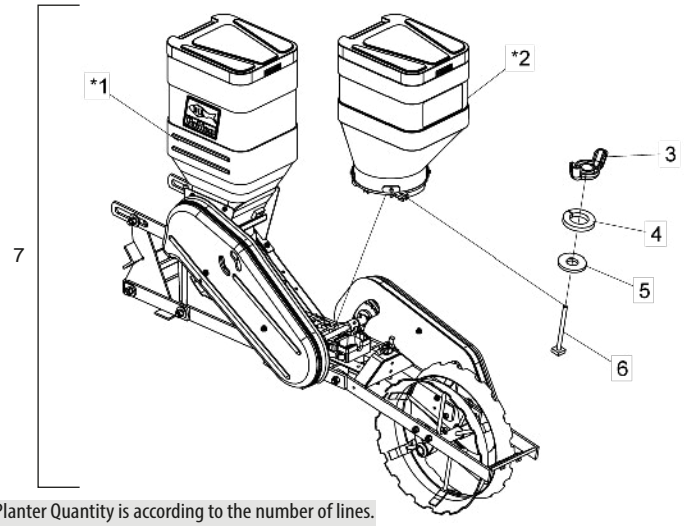

Item 7 - The Row Planter Quantity is according to the number of lines.

* Item 1 - See page 11
* Item 2 - See page 20

Item	Code	Product description	All
*1	5124010525-3	Row Planter W/Iron Compactation Wheel For Conventional Planting	1
*2	5092010341-0	Seed Hopper 45Lt Complete(Red Ral 3020) Baldan System	1
3	6020310819-5	Nut M8 X 1,25	1
4	6020010004-5	Pressure Washer M8 Media	1
5	5024010073-5	Smooth Washer Ø8,5 X Ø20 X 2,00Mm	1
6	5420010102-5	Bolt M8 X 97Mm(Cab.Soldada)	1
7	5124010523-7	Complete Row Planter With Iron Compactation Wheel - Conventional Planting	-
7	5124010527-0	Complete Row Planter With Iron Compactation Wheel - No Till	-

• Row Planter W/ Rubber Wheel Without Fertilizer Box - Optional

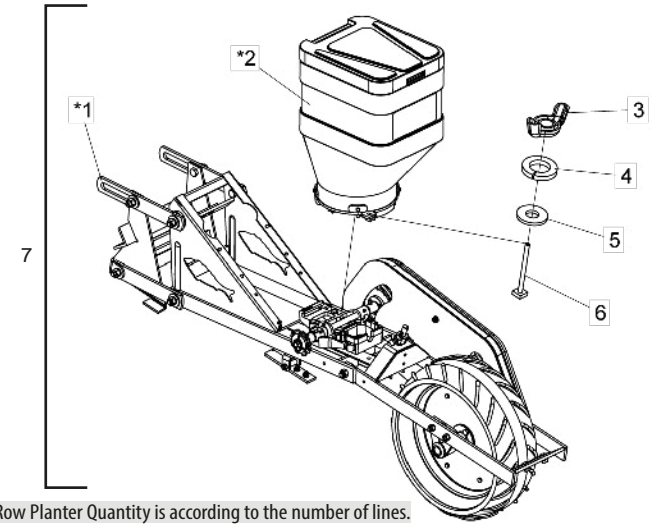

Item 7 - The Row Planter Quantity is according to the number of lines.

* Item 1 -See page 9
* Item 2 - See page 20

Item	Code	Product description	All
*1	5124100021-8	Row Planter W/ Rubber Compactation Wheel For Conventional Planter Without Fertilizer Hopper	1
*2	5092010341-0	Seed Hopper 45Lt Complete(Red Ral 3020) Baldan System	1
6	5420010102-5	Bolt M8 X 97Mm	1
3	6020310819-5	Nut M8 X 1,25	1
4	6020010004-5	Pressure Washer M8 Media	1
5	5024010073-5	Smooth Washer Ø8,5 X Ø20 X 2,00Mm	1
7	5124010520-2	Complete Row Planter With Rubber Compactation Wheel - Conventional Planting Without Fertilizer Box	-

• Row Planter W/ Rubber Wheel W/ Fertilizer Box - Optional

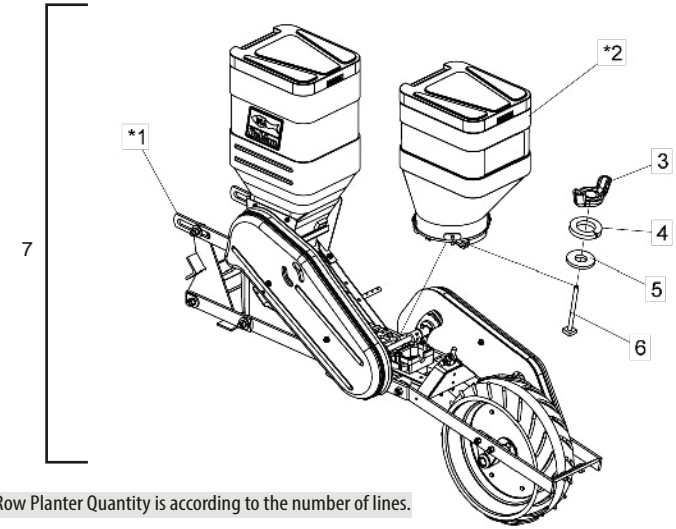

Item 7 - The Row Planter Quantity is according to the number of lines.

* Item 1 - See page 11
* Item 2 - See page 20

Item	Code	Product description	All
*1	5124010524-5	Cart W/ Rubber Compactation Wheel For Conventional Planter	1
*2	5092010341-0	Seed Hopper 45Lt Complete(Red Ral 3020) Baldan System	1
3	6020310819-5	Nut M8 X 1,25	1
4	6020010004-5	Pressure Washer M8 Media	1
5	5024010073-5	Smooth Washer Ø8,5 X Ø20 X 2,00Mm	1
6	5420010102-5	Parafuso Cab.Quadrada M8 X 97Mm(Cab.Soldada)	1
7	5124010522-9	Complete Cart With Rubber Compactation Wheel - Conventional Planting	-
7	5124010526-1	Complete Cart With Rubber Compactation Wheel - No Till Planter	-

• Row Planter W/ Compactation Wheel Without Fertilizer Box

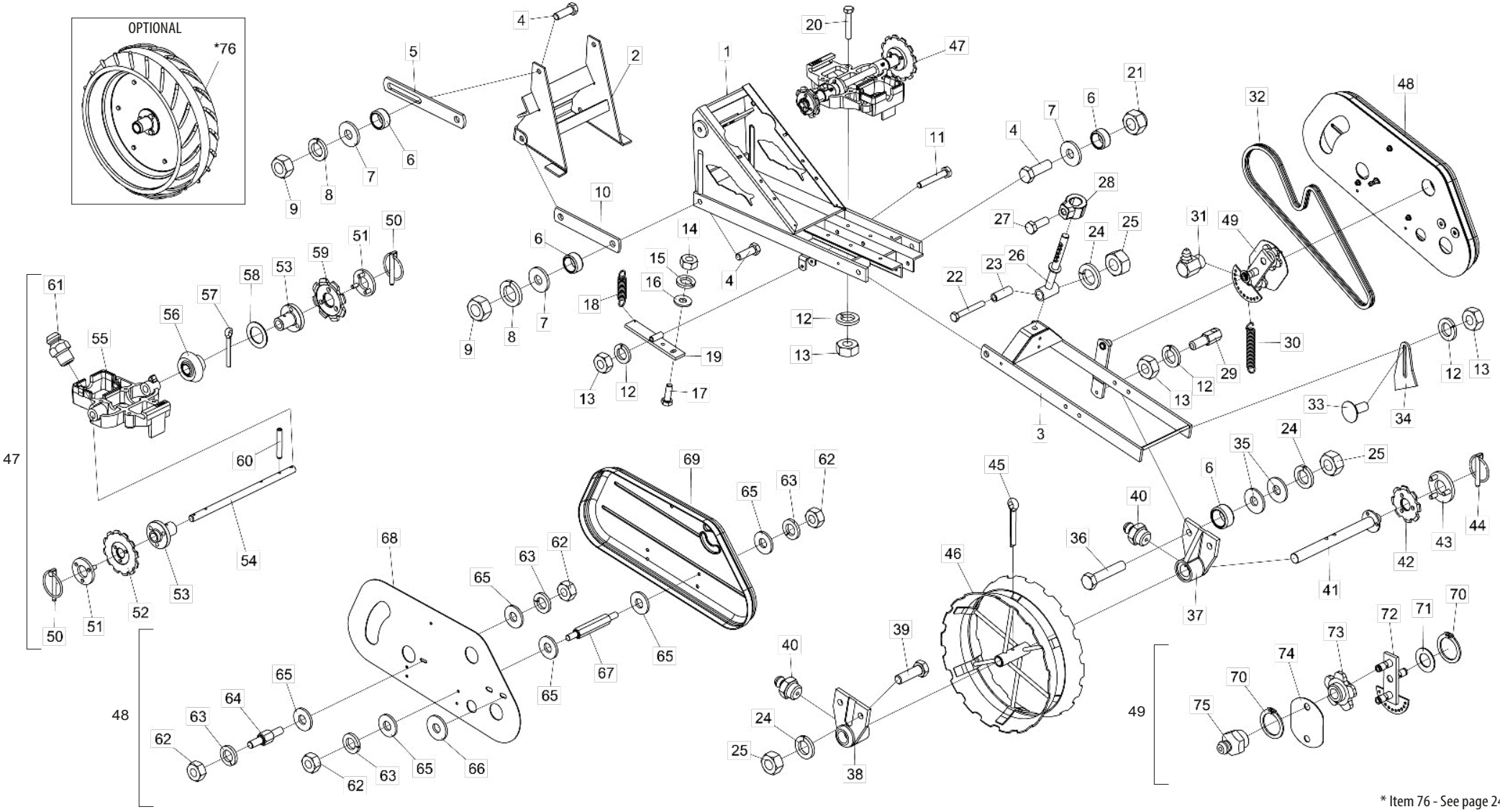

* Item 76 - See page 24
Seed Box - See page 20

BALDAN

• Table Row Planter W/ Compactation Wheel Without Fertilizer Box

Item	Code	Product description	All
1	5404010083-3	Spare Row Planter	1
2	5530220022-9	Support Of Row Planter	1
3	5530240033-3	Compactation Wheel Support	1
4	6020311210-9	Hexagonal Head Bolt M16 X 2,00 X 50Mm Cl8.8 Rt	10
5	5136020017-9	Articulation Upper Plate Support	2
6	5080020009-9	Bushing Of Ø21/32" X Ø7/8" X 11,3Mm	12
7	5024010298-3	Smooth Washer Ø17 X Ø44 X 4,75Mm(Galvanized)	8
8	6020010124-6	Pressure Washer M16 Media	8
9	6020310818-7	Hexagonal Nut M16 X 2,00 Ma Cl8 Ch.24Mm H.13,00Mm	8
10	5040120738-1	Articulation Support	2
11	6020310567-6	Hexagonal Head Bolt M10 X 1,50 X 65Mm Cl8.8 Rp	1
12	6020010394-0	Pressure Washer M10 Media	8
13	6020310822-5	Hexagonal Nut M10 X 1,50 Ma Cl8 Ch.17Mm H.8,00Mm	8
14	6020310454-8	Hexagonal Nut M8 X 1,25 Ma Cl8 Ch.13Mm H.6,50Mm	2
15	6020010004-5	Pressure Washer M8 Media	2
16	5024010073-5	Smooth Washer Ø8,5 X Ø20 X 2,00Mm	2
17	6020310448-3	Hexagonal Head Bolt M8 X 1,25 X 25Mm Cl8.8 Rt	2
18	6020250254-0	Helical Spring Ø11 X Ø15 X 53Mm	1
19	5530170144-5	Shaft Support	1
20	6020310151-4	Hexagonal Head Bolt M10 X 1,50 X 60Mm Cl8,8 Rt	4
21	6020317443-0	Self-Locking Nut With Nylon M16 X 2,00 Ma Cl8 Ch.24Mm H.16,00Mm	2
22	6020317495-3	Hexagonal Head Bolt M12 X 1,75 X 90Mm Cl8.8 Rp	1
23	5080010134-1	Bushing Of Ø13 X Ø19 X 52Mm	1
24	6020010395-8	Pressure Washer M12 Media	5
25	6020310820-9	Hexagonal Nut M12 X 1,75 Ma Cl8 Ch.19Mm H.10,00Mm	5
26	5566020043-5	Rod Spring	1
27	6020310349-5	Hexagonal Head Bolt M12 X 1,75 X 30Mm Cl8.8 R Wth Point	1
28	5080011663-2	Fixation Support Of Spring Rod	1
29	6020090685-6	Hexagonal Shaft Of Spring With Thread M10	1
30	6020250245-0	Helical Spring Ø14 X Ø19 X 130Mm	1
31	6020130112-5	Grease Fitting 1/8"	1
32	6020050043-4	Chain 2050 Of 51 Links + Amendment	1
33	6020317445-7	French Head Bolt M10 X 1,50 X 25Mm Cl8.8 Rt	2
34	5352010008-0	Wheel Scraper	2
35	5024010068-9	Smooth Washer Ø13,3 X Ø35,5 X 3,00Mm	4
36	6020310210-3	Hexagonal Head Bolt M12 X 1,75 X 60Mm Cl8.8 Rt	2
37	5204050014-6	Small Left Hub Of Compactation Wheel	1
38	5204050013-8	Small Right Hub Of Compactation Wheel	1
39	6020310152-2	Hexagonal Head Bolt M12 X 1,75 X 40Mm Cl8.8 Rp	2

Item	Code	Product description	All
40	6020130108-7	Grease Fitting 1/8"	2
41	5232070080-9	Compactation Wheel Shaft	1
42	5256030006-9	Sprocket 8 Teeth	1
43	5558100005-6	Lock	1
44	6020390293-2	Lock Ø5,75 X 40Mm	1
45	6020050122-8	Cotterpin 3/8" X 2.1/2"	1
46	5498050001-5	Spare Wheel Compactation	1
47	5530260014-6	Complete Support Of Seed Distributor Base	1
48	5464010390-9	Complete Lower Chain Protection	1
49	5268010072-1	Complete Chain Stretcher	1
50	6020390293-2	Lock Ø5,75 X 40Mm	2
51	5558100005-6	Lock	2
52	5256030012-3	Sprocket 12 Teeth	1
53	5204060017-5	Transmission Shaft Hub	2
54	5232020177-2	Transmission Shaft	1
55	5530260015-4	Support Of Seed Distributor Base	1
56	5428020003-7	Pinion Of 15 Teeth	1
57	6020050106-6	Cotterpin 3/16" X 1.1/2"	1
58	5024010160-0	Smooth Washer Ø20 X Ø31 X 1,21Mm	1
59	5256030006-9	Sprocket 8 Teeth	1
60	6020310485-8	Heavy Elastic Pin Ø6 X 36Mm	2
61	6020130100-1	Grease Fitting 1/4"	2
62	6020310454-8	Hexagonal Nut M8 X 1,25 Ma Cl8 Ch.13Mm H.6,50Mm	8
63	6020010004-5	Pressure Washer M8 Media	8
64	5232012008-0	Hexagonal Shaft 1/2" X 15,30Mm	1
65	5024010073-5	Smooth Washer Ø8,5 X Ø20 X 2,00Mm	14
66	5024010068-9	Smooth Washer Ø13,3 X Ø35,5 X 3,00Mm	2
67	5232012005-5	Hexagonal Shaft 1/2" X 62Mm	3
68	5136015446-0	Protection Plate of Lower Chain	1
69	6020055658-8	Small Chain Cap Plb	1
70	6020010252-8	Retention Oring	3
71	5024010059-0	Smooth Washer Ø16,5 X Ø29 X 1,21Mm	1
72	5268010073-0	Chain Stretcher	1
73	6020090502-7	Gear 5012-1	2
74	5136015444-4	Plate Of Stretcher	1
75	6020130108-7	Grease Fitting 1/8"	2
		Optional	
*76	5498070008-1	Complete Rubber Compaction Wheel	1

• Row Planter W/ Compactation Wheel W/ Fertilizer Box

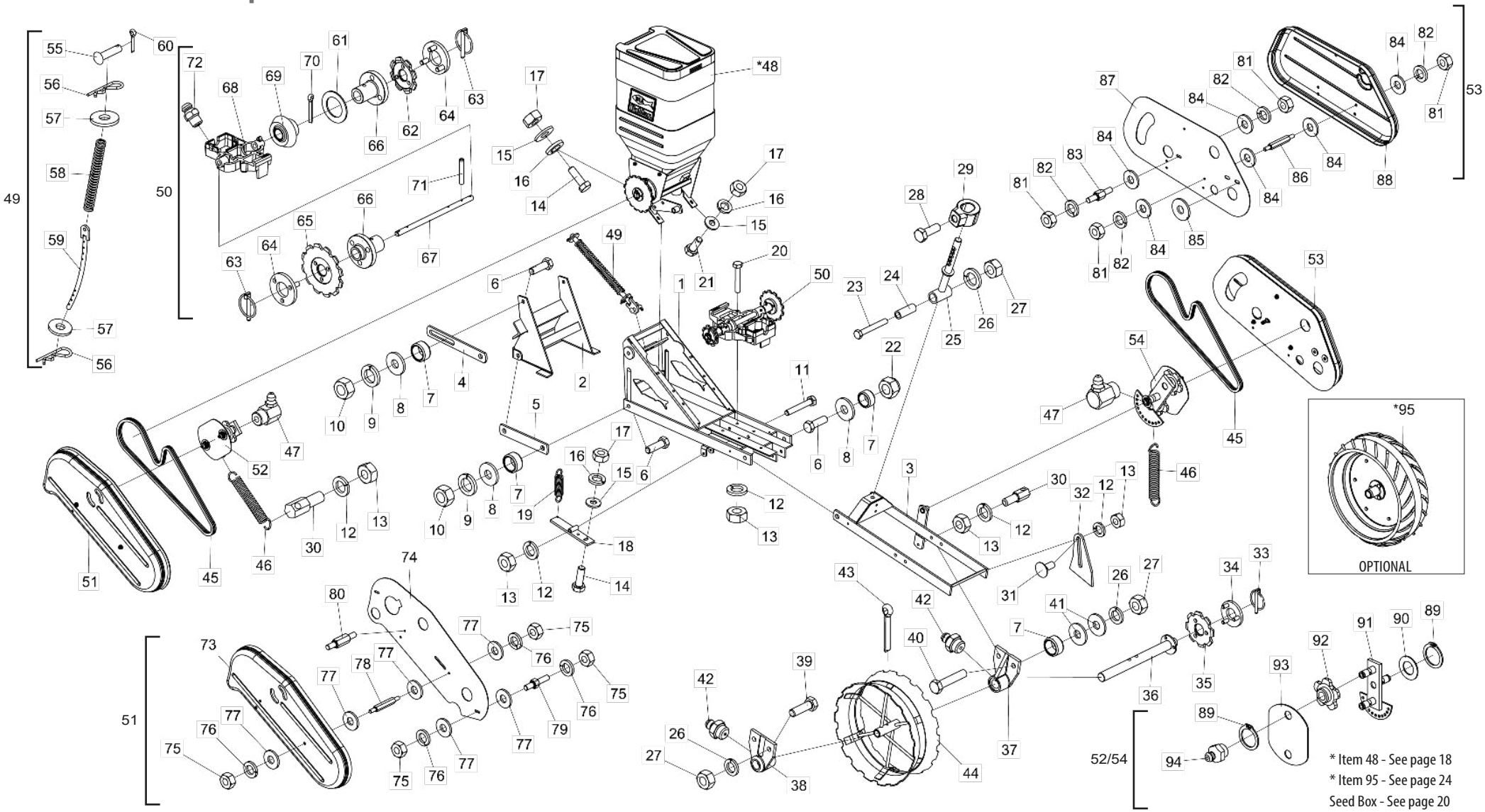

BALDAN

• Table Row Planter W/ Compactation Wheel W/ Fertilizer Box

Item	Code	Product description	All
1	5404010083-3	Spare Row Planter	1
2	5530220022-9	Row Planter Support	1
3	5530240033-3	Support Of Compactation Wheel	1
4	5136020017-9	Articulation Upper Plate Support	2
5	5040120738-1	Articulation Lower Bar Support	2
6	6020311210-9	Hexagonal Head Bolt M16 X 2,00 X 50mm Cl8.8 Rt	10
7	5080020009-9	Bushing Of Ø21/32" X Ø7/8" X 11,3mm	12
8	5024010298-3	Smooth Washer Ø17 X Ø44 X 4,75mm(Galvanized)	8
9	6020010124-6	Pressure Washer M16 Media	8
10	6020310818-7	Hexagonal Nut M16 X 2,00 Ma Cl8 Ch.24mm H.13,00mm	8
11	6020310567-6	Hexagonal Head Bolt M10 X 1,50 X 65mm Cl8.8 Rp	1
12	6020010394-0	Pressure Washer M10 Media	9
13	6020310822-5	Hexagonal Nut M10 X 1,50 Ma Cl8 Ch.17mm H.8,00mm	9
14	6020310448-3	Hexagonal Head Bolt M8 X 1,25 X 25mm Cl8.8 Rt	4
15	5024010073-5	Smooth Washer Ø8,5 X Ø20 X 2,00mm	6
16	6020010004-5	Pressure Washer M8 Media	6
17	6020310454-8	Hexagonal Nut M8 X 1,25 Ma Cl8 Ch.13mm H.6,50mm	6
18	5530170144-5	Cover Shaft Support	1
19	6020250254-0	Helical Spring Ø11 X Ø15 X 53mm	1
20	6020310151-4	Hexagonal Head Bolt M10 X 1,50 X 60mm Cl8,8 Rt	4
21	6020311269-9	Hexagonal Head Bolt M8 X 1,25 X 20mm Cl8.8 Rt	2
22	6020317443-0	Self-Locking Nut With Nylon M16 X 2,00 Ma Cl8 Ch.24mm H.16,00mm	2
23	6020317495-3	Hexagonal Head Bolt M12 X 1,75 X 90mm Cl8.8 Rp	1
24	5080010134-1	Bushing Of Ø13 X Ø19 X 52mm	1
25	5566020043-5	Rod Spring	1
26	6020010395-8	Pressure Washer M12 Media	5
27	6020310820-9	Hexagonal Nut M12 X 1,75 Ma Cl8 Ch.19mm H.10,00mm	5
28	6020310349-5	Hexagonal Head Bolt M12 X 1,75 X 30mm Cl8.8 R Wth Point	1
29	5080011663-2	Fixation Support Of Spring Rod	1
30	6020090685-6	Hexagonal Shaft Of Spring With Thread M10	2
31	6020317445-7	French Head Bolt M10 X 1,50 X 25mm Cl8.8 Rt	2
32	5352010008-0	Wheel Scraper	2
33	6020390293-2	Lock Ø5,75 X 40mm	1
34	5558100005-6	Lock	1
35	5256030006-9	Sprocket 8 Teeth	1
36	5232070080-9	Compactation Wheel Shaft	1
37	5204050014-6	Small Left Hub Of Compactation Wheel	1
38	5204050013-8	Small Right Hub Of Compactation Wheel	1
39	6020310152-2	Hexagonal Head Bolt M12 X 1,75 X 40mm Cl8.8 Rp	2
40	6020310210-3	Hexagonal Head Bolt M12 X 1,75 X 60mm Cl8.8 Rt	2
41	5024010068-9	Smooth Washer Ø13,3 X Ø35,5 X 3,00mm	4
42	6020130108-7	Grease Fitting 1/8"	2
43	6020050122-8	Cotterpin 3/8" X 2.1/2"	1
44	5498050001-5	Compactation Wheel	1
45	6020050043-4	Chain 2050 Of 51 Links + Amendment	2
46	6020250245-0	Helical Spring Ø14 X Ø19 X 130mm Wire=Ø2,5mm	2
47	6020130112-5	Grease Fitting 1/8"	2
*48	5530018678-4	Complete Support With Fertilizer Box	1
49	5566010065-1	Complete Front Rod Of Spring	1

Item	Code	Product description	All
50	5530260014-6	Complete Support Of Seed Distributor Base	1
51	5464010392-5	Complete Upper Chain Protection	1
52	5268010824-2	Complete Chain Stretcher	1
53	5464010390-9	Complete Lower Chain Protection	1
54	5268010072-1	Complete Chain Stretcher	1
55	6020311237-0	French Head Pin Ø11,2 X 42mm	1
56	6020390294-0	Lock Nma - Type "R" Ø3,5 X 67mm(Special)	2
57	5024010298-3	Smooth Washer Ø17 X Ø44 X 4,75mm(Galvanized)	2
58	6020250286-8	Helical Spring Ø20,5 X Ø30 X 260mm	1
59	5566040117-1	Front Rod Of Spring	1
60	6020050104-0	Cotterpin 3/16" X 1"	1
61	5024010160-0	Smooth Washer Ø20 X Ø31 X 1,21mm	1
62	5256030006-9	Sprocket 8 Teeth	1
63	6020390293-2	Lock Ø5,75 X 40mm	2
64	5558100005-6	Lock	2
65	5256030012-3	Sprocket 12 Teeth	1
66	5204060017-5	Transmission Shaft Hub	2
67	5232020177-2	Transmission Shaft	1
68	5530260015-4	Support Of Seed Distributor Base	1
69	5428020003-7	Pinion Of 15 Teeth	1
70	6020050106-6	Cotterpin 3/16" X 1.1/2"	1
71	6020310485-8	Heavy Elastic Pin Ø6 X 36mm (Seeger Reno 701.163)	2
72	6020130100-1	Grease Fitting 1/4"	2
73	6020055659-6	Large Chain Cap Plb (Yellow Emergency Sam-Am)	1
74	5136015449-5	Upper Protection Plate	1
75	6020310454-8	Hexagonal Nut M8 X 1,25 Ma Cl8 Ch.13mm H.6,50mm	8
76	6020010004-5	Pressure Washer M8 Media	8
77	5024010073-5	Smooth Washer Ø8,5 X Ø20 X 2,00mm	14
78	5232012005-5	Hexagonal Shaft 1/2" X 62mm	2
79	5232012006-3	Hexagonal Shaft 1/2" X 9,5mm	1
80	5232012007-1	Hexagonal Shaft De 1/2" X 29mm.	1
81	6020310454-8	Hexagonal Nut M8 X 1,25 Ma Cl8 Ch.13mm H.6,50mm	8
82	6020010004-5	Pressure Washer M8 Media	8
83	5232012008-0	Hexagonal Shaft 1/2" X 15,30mm	1
84	5024010073-5	Smooth Washer Ø8,5 X Ø20 X 2,00mm	14
85	5024010068-9	Smooth Washer Ø13,3 X Ø35,5 X 3,00mm	2
86	5232012005-5	Hexagonal Shaft 1/2" X 62mm	3
87	5136015446-0	Protection Plate Of Chain	1
88	6020055658-8	Small Chain Cap Plb	1
89	6020010252-8	Retention Ring E-16 G501-016-01	6
90	5024010059-0	Smooth Washer Ø16,5 X Ø29 X 1,21mm	4
91	5268010825-0	Chain Stretcher	1
91	5268010073-0	Chain Stretcher	1
92	6020090502-7	Sprocket 5012-1	4
93	5136015444-4	Plate Of Stretcher	2
94	6020130108-7	Grease Fitting 1/8"	4
		Optional	
*95	5498070008-1	Complete Rubber Compaction Wheel	1

• Row Planter Titanium - Optional

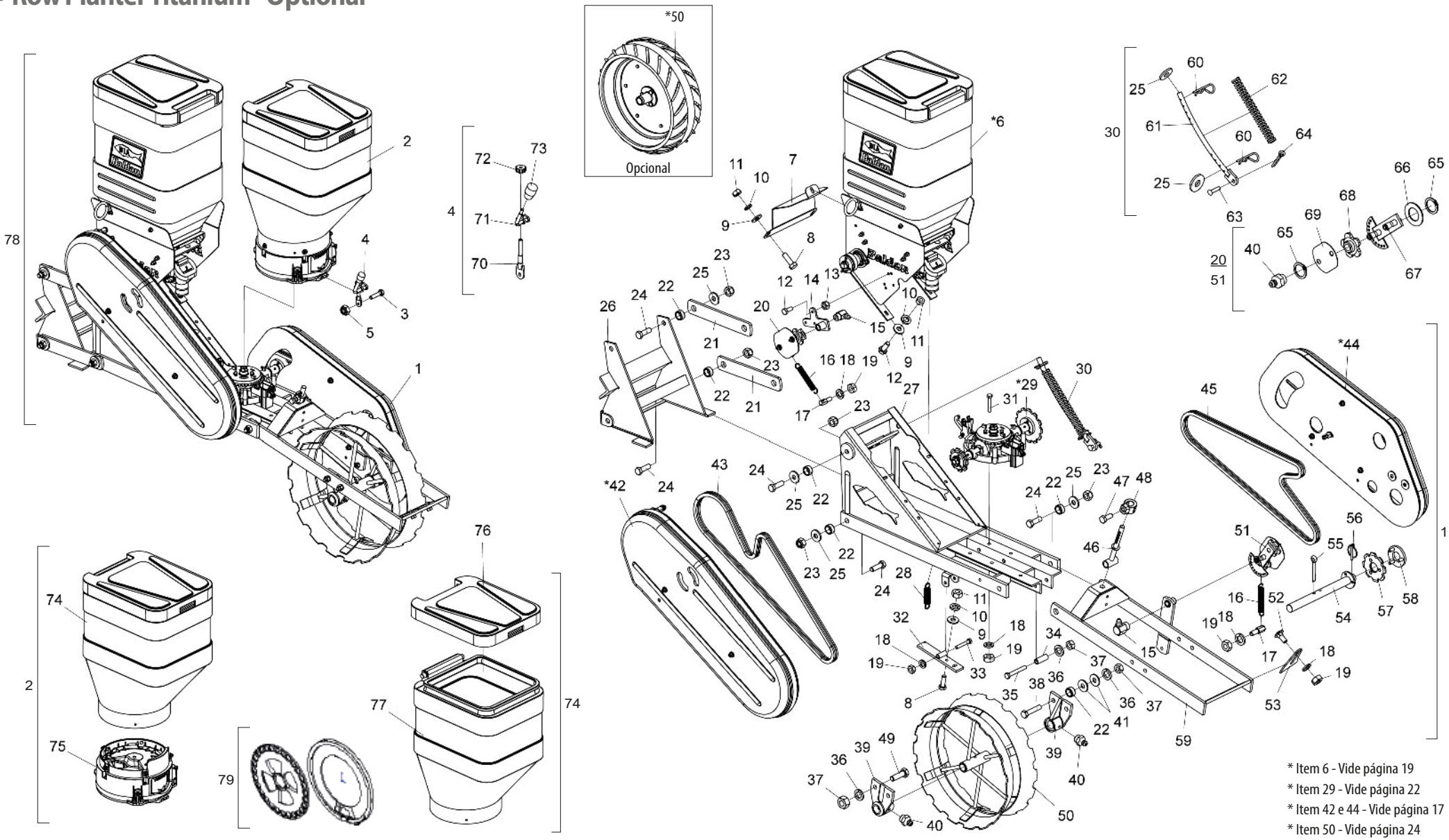

* Item 6 - Vide página 19
* Item 29 - Vide página 22
* Item 42 e 44 - Vide página 17
* Item 50 - Vide página 24

BALDAN

• Table Row Planter Titanium - Optional

Item	Code	Product description	All	Direct Planting W/Iron Wheel	Direct Planting W/Rubber Wheel	Conventional Planting W/Iron Wheel	Conventional Planting W/Rubber Wheel
1	5124010956-9	Cart w/Iron Compactor Wheel FOR/No-tillage (Universal)		1			
1	5124018033-6	Cart With Rubber Compactor Wheel For Direct Planting (Universal)			1		
1	5124018042-5	Cart w/Iron Compactor Wheel FOR/Conventional Planting				1	
1	5124018110-3	Cart With Rubber Compactor Wheel FOR/Conventional Planting (Universal)					1
2	5092010560-0	Seed Hopper 45 Litros Complete(Red Ral-3020) Titanium System	1				
3	6020310027-5	Hexagonal Head Bolt M6 X 1,00 X 25mm Cl8.8 Rt	1				
4	5558010431-1	Complete Lock Of Seed Box	1				
5	6020317442-2	Self-Locking Nut With Nylon Low M6 X 1,00 Ma Cl8 Ch.10mm H.6,00mm	1				
*6	5530017734-3	Support W/Complete Box	1				
7	5106010205-1	Fertisystem Plb Protection Cover	1				
8	6020310448-3	Hexagonal Head Bolt M8 X 1,25 X 25mm Cl8.8 Rt	4				
9	5024010073-5	Smooth Washer Ø8,5 X Ø20 X 2,00mm	6				
10	6020010004-5	Pressure Washer M8 Media	6				
11	6020310454-8	Hexagonal Nut M8 X 1,25 Ma Cl8 Ch.13mm H.6,50mm	6				
12	6020311269-9	Hexagonal Head Bolt M8 X 1,25 X 20mm Cl8.8 Rt	5				
13	6020317449-0	Self-Locking Nut With Nylon Low M8 X 1,25 Ma Cl8 Ch.13mm H.8,00mm	3				
14	5530017733-5	Chain Tensioner Support	1				
15	6020130112-5	Grease Fitting 1/8"	2				
16	6020250245-0	Helical Spring Ø14 X Ø19 X 130mm	2				
17	6020090685-6	Hexagonal Shaft Of Spring With Thread M10	2				
18	6020010394-0	Pressure Washer M10 Media	9				
19	6020310822-5	Hexagonal Nut M10 X 1,50 Ma Cl8 Ch.17mm H.8,00mm	9				
20	5268010826-9	Complete Chain Stretcher (Asa 2050)	1				
21	5040120738-1	Articulation Support		4	4	2	2
21	5136020017-9	Articulation Upper Plate Support				2	2
22	5080020009-9	Bushing Of Ø21/32" X Ø7/8" X 11,3mm	12				
23	6020317443-0	Self-Locking Nut With Nylon M16 X 2,00 Ma Cl8 Ch.24mm H.16,00mm	10				
24	6020311210-9	Hexagonal Head Bolt M16 X 2,00 X 50mm Cl8.8 Rt	10				
25	5024010298-3	Smooth Washer Ø17 X Ø44 X 4,75mm	10				
26	5530220022-9	Row Planter Support	1				
27	5404010083-3	Spare Row Planter	1				
28	6020250254-0	Helical Spring Ø11 X Ø15 X 53mm	1				
*29	5044010401-8	Plb Universal Seed Distributor Base	1				
30	5566010065-1	Complete Front Rod Of Spring	1				
31	6020310151-4	Hexagonal Head Bolt M10 X 1,50 X 60mm Cl8,8 Rt	4				
32	5530170144-5	Shaft Support	1				
33	6020310567-6	Hexagonal Head Bolt M10 X 1,50 X 65mm Cl8.8 Rp	1				
34	5080010134-1	Bushing Of Ø13 X Ø19 X 52mm	1				
35	6020317495-3	Hexagonal Head Bolt M12 X 1,75 X 90mm Cl8.8 Rp	1				
36	6020010395-8	Pressure Washer M12 Media	5				
37	6020310820-9	Hexagonal Nut M12 X 1,75 Ma Cl8 Ch.19mm H.10,00mm	5				
38	6020310210-3	Hexagonal Head Bolt M12 X 1,75 X 60mm Cl8.8 Rt	2				
39	5204050013-8	Small Right Hub Of Compactation Wheel	1				
39	5204050014-6	Small Left Hub Of Compactation Wheel	1				
40	6020130108-7	Grease Fitting 1/8"	6				

Item	Code	Product description	All	Direct Planting W/Iron Wheel	Direct Planting W/Rubber Wheel	Conventional Planting W/Iron Wheel	Conventional Planting W/Rubber Wheel
41	5024010068-9	Smooth Washer Ø13,3 X Ø35,5 X 3,00mm	4				
*42	5464010631-2	Complete Superior Chain Protection(Universal/Fertisystem)	1				
43	6020051048-0	Chain 2050 Of 58 Links + Reduction	1				
*44	5464010390-9	Complete Lower Chain Protection	1				
45	6020050043-4	Chain 2050 Of 51 Links + Amendment	1				
46	5566020043-5	Rod Spring	1				
47	6020310349-5	Hexagonal Head Bolt M12 X 1,75 X 30mm Cl8.8 R Wth Point	1				
48	5080011663-2	Fixation Support Of Spring Rod	1				
49	6020310152-2	Hexagonal Head Bolt M12 X 1,75 X 40mm Cl8.8 Rp	2				
50	5498050001-5	Compactation Wheel		1		1	
50	5498070008-1	Complete Rubber Compaction Wheel			1		1
51	5268010072-1	Complete Chain Stretcher	1				
52	6020317445-7	French Head Bolt M10 X 1,50 X 25mm Cl8.8 Rt	2				
53	5352010008-0	Wheel Scraper	2				
54	5232070080-9	Compactation Wheel Shaft	1				
55	6020050122-8	Cotterpin 3/8" X 2.1/2"	1				
56	6020390293-2	Lock Ø5,75 X 40mm	1				
57	5256030006-9	Sprocket 8 Teeth	1				
58	5558100005-6	Lock	1				
59	5530240033-3	Compactation Wheel Support	1				
60	6020390294-0	Lock Nma - Type "R" Ø3,5 X 67mm(Special)	2				
61	5566040117-1	Front Rod Of Spring	1				
62	6020250286-8	Helical Spring Ø20,5 X Ø30 X 260mm	1				
63	6020311237-0	French Head Pin Ø11,2 X 42mm	1				
64	6020050104-0	Cotterpin 3/16" X 1"	1				
65	6020010252-8	Retaining Oring	6				
66	5024010059-0	Smooth Washer Ø16,5 X Ø29 X 1,21mm	2				
67	5268010827-7	Chain Stretcher (Asa 2050)	1				
67	5268010073-0	Chain Stretcher	1				
68	6020090502-7	Sprocket 5012-1	4				
69	5136015444-4	Plate Of Stretcher	2				
70	5432010578-4	Lock Pin	1				
71	5558010432-0	Lock Of Seed Box	1				
72	5456010109-3	Adjustment Of Nut	1				
73	6020430203-3	Handle Pma 330 Thread 3/8" X 16 Fios	1				
74	6020055068-7	Plastic Box For Seed 45 Liters With Cover	1				
75	6020055623-5	Titanium Kit With Assembly Seed Hopper Kit (1030001)	1				
76	6020390869-8	Cover Of Fertilizer/Seed Plastic Hopper 65 Liters (Black)	1				
77	6020055067-9	Plastic Box For Seed 45 Liters Without Cover	1				
78	5124017999-0	Cpl Cart W/Iron Compactor Wheel Direct Planting (Universal/Fertisystem)(Titanium)		1			
78	5124018034-4	Complete cart w/wheel No-Till Rubber Compactor (Universal/Fertisystem)(Titanium)			1		
78	5124018050-6	Cart complete With Compactor Wheel Conventional Planting Iron (Universal/Fertisystem)(Titanium)				1	
78	5124018111-1	Cpl Cart with Compact Rubber Wheel Conventional Planting (Universal/Ferti./Titanium)					1
79	6020056425-4	Titanium Disc/Rings Kit For Maize 28 Holes (1060002)	1				
79	6020056426-2	Titanium Disc/Rings Kit For Soy 90 Holes (1060003)	1				

• Cart With Universal System/Fertisystem - Optional

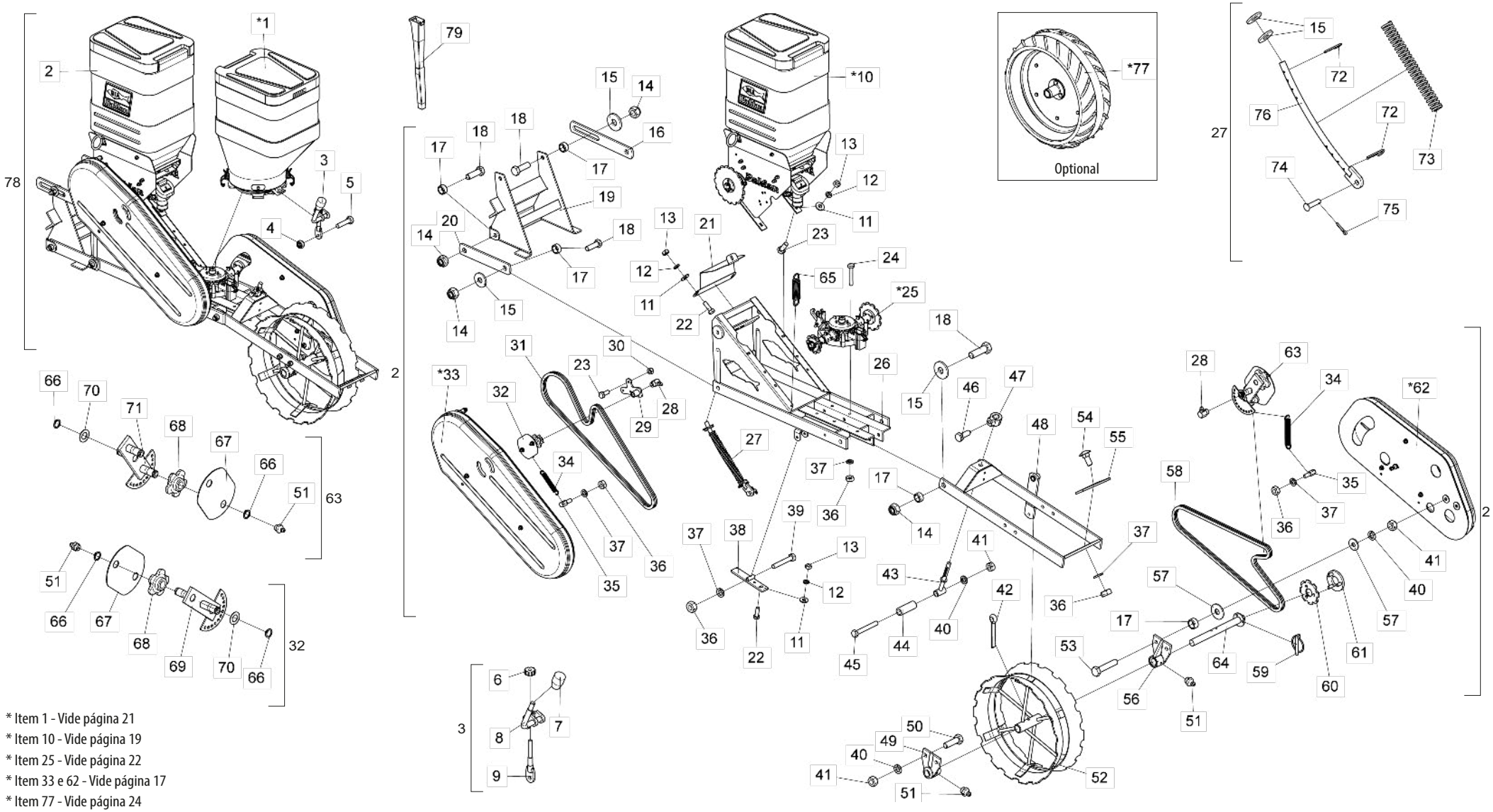

* Item 1 - Vide página 21
* Item 10 - Vide página 19
* Item 25 - Vide página 22
* Item 33 e 62 - Vide página 17
* Item 77 - Vide página 24

BALDAN

• Table Cart With Universal System/Fertisystem - Optional

Item	Code	Product description	All	W/Iron Wheel Conventional Planting	W/No-till Rubber Wheel	Conventional Planting Rubber Wheel
*1	5092010559-6	Seed Hopper 45 Litros Complete(Red Ral-3020) Universal System(2014)	1			
2	5124018042-5	Cart w/Iron Compactor Wheel FOR/Conventional Planting		1		
2	5124018033-6	Cart With Rubber Compactor Wheel For Direct Planting (Universal)			1	
2	5124018110-3	Cart with Rubber Compacting Wheel for Conventional Planting (Universal/Fertisystem)				1
3	5558010431-1	Complete Lock Of Seed Box	1			
4	6020317442-2	Self-Locking Nut With Nylon Low M6 X 1,00 Ma Cl8 Ch.10mm H.6,00mm	1			
5	6020310027-5	Hexagonal Head Bolt M6 X 1,00 X 25mm Cl8.8 Rt	1			
6	5456010109-3	Adjustment Of Nut	1			
7	6020430203-3	Handle Pma 330 Thread 3/8" X 16 Fios	1			
8	5558010432-0	Lock Of Seed Box	1			
9	5432010578-4	Lock Pin	1			
*10	5530017734-3	Support W/Complete Box	1			
11	5024010073-5	Smooth Washer Ø8,5 X Ø20 X 2,00mm	6			
12	6020010004-5	Pressure Washer M8 Media	6			
13	6020310454-8	Hexagonal Nut M8 X 1,25 Ma Cl8 Ch.13mm H.6,50mm	6			
14	6020317443-0	Self-Locking Nut With Nylon M16 X 2,00 Ma Cl8 Ch.24mm H.16,00mm	10			
15	5024010298-3	Smooth Washer Ø17 X Ø44 X 4,75mm	10			
16	5136020017-9	Articulation Upper Plate Support		2		2
17	5080020009-9	Bushing Of Ø21/32" X Ø7/8" X 11,3mm	12			
18	6020311210-9	Hexagonal Head Bolt M16 X 2,00 X 50mm Cl8.8 Rt	10			
19	5530220022-9	Row Planter Support	1			
20	5040120738-1	Articulation Support		2	4	2
21	5106010205-1	Fertisystem Plb Protection Cover	1			
22	6020310448-3	Hexagonal Head Bolt M8 X 1,25 X 25mm Cl8.8 Rt	4			
23	6020311269-9	Hexagonal Head Bolt M8 X 1,25 X 20mm Cl8.8 Rt	5			
24	6020310151-4	Hexagonal Head Bolt M10 X 1,50 X 60mm Cl8,8 Rt	4			
*25	5044010401-8	Plb Universal Seed Distributor Base	1			
26	5404010083-3	Spare Row Planter	1			
27	5566010065-1	Complete Front Rod Of Spring	1			
28	6020130112-5	Grease Fitting 1/8"	2			
29	5530017733-5	Chain Tensioner Support	1			
30	6020317449-0	Self-Locking Nut With Nylon Low M8 X 1,25 Ma Cl8 Ch.13mm H.8,00mm	3			
31	6020051048-0	Chain 2050 Of 58 Links + Reduction	1			
32	5268010826-9	Complete Chain Stretcher (Asa 2050)	1			
*33	5464010631-2	Complete Superior Chain Protection(Universal/Fertisystem)	1			
34	6020250245-0	Helical Spring Ø14 X Ø19 X 130mm	2			
35	6020090685-6	Hexagonal Shaft Of Spring With Thread M10	2			
36	6020310822-5	Hexagonal Nut M10 X 1,50 Ma Cl8 Ch.17mm H.8,00mm	9			
37	6020010394-0	Pressure Washer M10 Media	9			
38	5530170144-5	Shaft Support	1			
39	6020310567-6	Hexagonal Head Bolt M10 X 1,50 X 65mm Cl8.8 Rp	1			
40	6020010395-8	Pressure Washer M12 Media	5			

Item	Code	Product description	All	W/Iron Wheel Conventional Planting	W/No-till Rubber Wheel	Conventional Planting Rubber Wheel
41	6020310820-9	Hexagonal Nut M12 X 1,75 Ma Cl8 Ch.19mm H.10,00mm	5			
42	6020050122-8	Cotterpin 3/8" X 2.1/2"	1			
43	5566020043-5	Rod Spring	1			
44	5080010134-1	Bushing Of Ø13 X Ø19 X 52mm	1			
45	6020317495-3	Hexagonal Head Bolt M12 X 1,75 X 90mm Cl8.8 Rp	1			
46	6020310349-5	Hexagonal Head Bolt M12 X 1,75 X 30mm Cl8.8 R Wth Point	1			
47	5080011663-2	Fixation Support Of Spring Rod	1			
48	5530240033-3	Compactation Wheel Support	1			
49	5204050014-6	Small Left Hub Of Compactation Wheel	1			
50	6020310152-2	Hexagonal Head Bolt M12 X 1,75 X 40mm Cl8.8 Rp	2			
51	6020130108-7	Grease Fitting 1/8"	2			
52	5498050001-5	Compactation Wheel		1		
53	6020310210-3	Hexagonal Head Bolt M12 X 1,75 X 60mm Cl8.8 Rt	2			
54	6020317445-7	French Head Bolt M10 X 1,50 X 25mm Cl8.8 Rt	2			
55	5352010008-0	Wheel Scraper	2			
56	5204050013-8	Small Right Hub Of Compactation Wheel	1			
57	5024010068-9	Smooth Washer Ø13,3 X Ø35,5 X 3,00mm	4			
58	6020050043-4	Chain 2050 Of 51 Links + Amendment	1			
59	6020390293-2	Lock Ø5,75 X 40mm	1			
60	5256030006-9	Sprocket 8 Teeth	1			
61	5558100005-6	Lock	1			
*62	5464010390-9	Complete Lower Chain Protection	1			
63	5268010072-1	Complete Chain Stretcher	1			
64	5232070080-9	Compactation Wheel Shaft	1			
65	6020250254-0	Helical Spring Ø11 X Ø15 X 53mm	1			
66	6020010252-8	Retaining Oring	6			
67	5136015444-4	Plate Of Stretcher	2			
68	6020090502-7	Sprocket 5012-1	4			
69	5268010827-7	Chain Stretcher (Asa 2050)	1			
70	5024010059-0	Smooth Washer Ø16,5 X Ø29 X 1,21mm	2			
71	5268010073-0	Chain Stretcher	1			
72	6020390294-0	Lock Nma - Type "R" Ø3,5 X 67mm(Special)	2			
73	6020250286-8	Helical Spring Ø20,5 X Ø30 X 260mm	1			
74	6020311237-0	French Head Pin Ø11,2 X 42mm	1			
75	6020050104-0	Cotterpin 3/16" X 1"	1			
76	5566040117-1	Front Rod Of Spring	1			
*77	5498070008-1	Complete Rubber Compaction Wheel			1	1
78	5124018041-7	Complete Cart W/Iron Compactor Wheel Conventional Planting (Universal/Fertisystem)		1		
78	5124018056-5	Complete Cart With Rubber Compactor Wheel Direct Planting (Universal/Fertisystem)			1	
78	5124018136-7	Cpl Cart with Rubber Compactor Wheel Conventional Planting (Universal/Fertisystem)				1
79	6020030727-8	Universal Seed Funnel (440mm)	1			

• Complete Lower Chain Protection

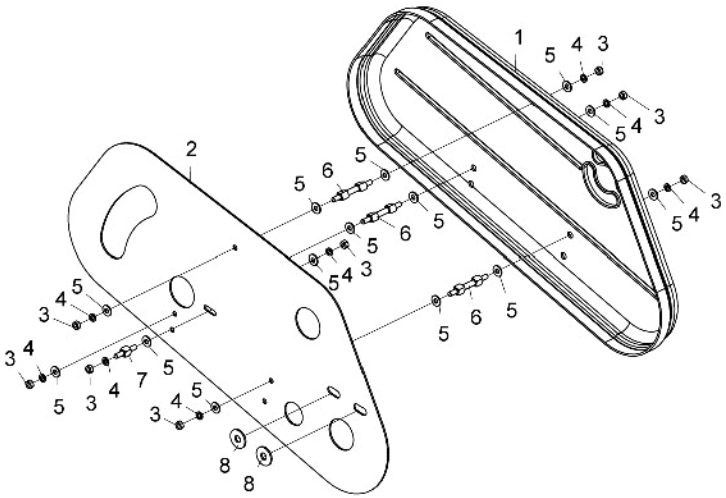

Item	Code	Product description	All
1	6020055658-8	Small Chain Cap Plb	1
2	5136015446-0	Lower Current Protection Plate	1
3	6020310454-8	Hexagonal Nut M8 X 1,25 Ma Cl8 Ch.13mm H.6,50mm	8
4	6020010004-5	Pressure Washer M8 Media	8
5	5024010073-5	Smooth Washer Ø8,5 X Ø20 X 2,00mm	14
6	5232012005-5	Hexagonal Shaft 1/2" X 62mm	3
7	5232012008-0	Hexagonal Shaft 1/2" X 15,30mm	1
8	5024010068-9	Smooth Washer Ø13,3 X Ø35,5 X 3,00mm	2

• Complete Superior Current Protection

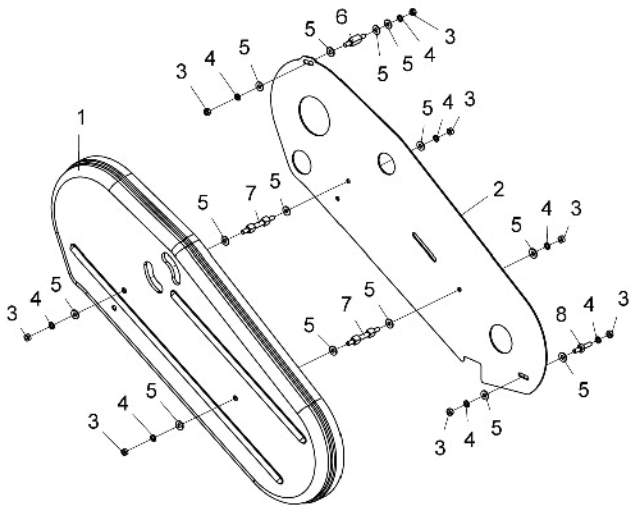

Item	Code	Product description	All
1	6020055665-0	Large Chain Cap Plb Air	1
2	5136018721-0	Upper Current Protection Plate	1
3	6020310454-8	Hexagonal Nut M8 X 1,25 Ma Cl8 Ch.13mm H.6,50mm	8
4	6020010004-5	Pressure Washer M8 Media	8
5	5024010073-5	Smooth Washer Ø8,5 X Ø20 X 2,00mm	14
6	5232012007-1	Hexagonal Shaft De 1/2" X 29mm.	1
7	5232012005-5	Hexagonal Shaft 1/2" X 62mm	2
8	5232012006-3	Hexagonal Shaft 1/2" X 9,5mm	1

• Fertilizer Box - Baldan System

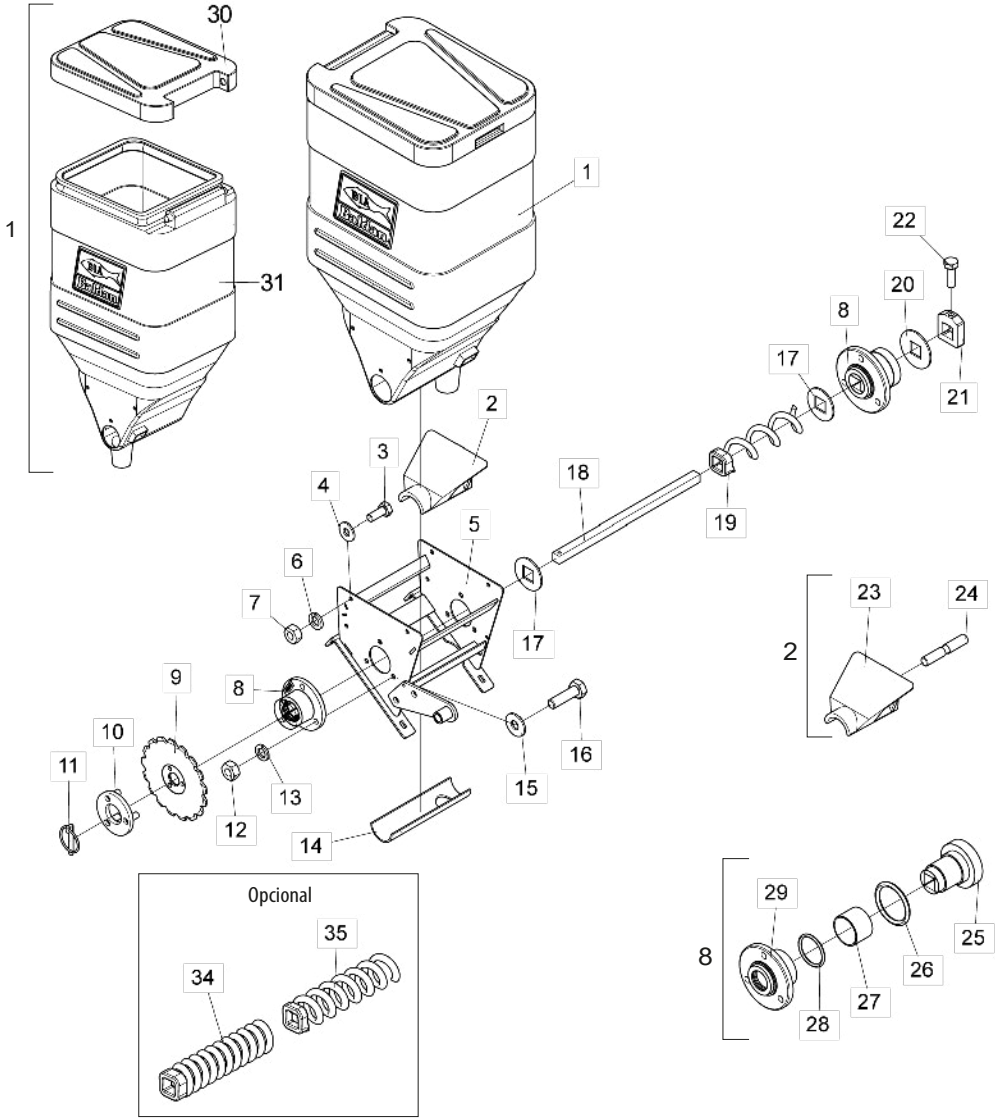

Item	Code	Product description	All
1	6020055066-0	Plastic Box For Fertilizer 65 Liters With Cover	1
2	5538014970-1	Complete Fertilizer Dosing Cover	1
3	6020311269-9	Hexagonal Head Bolt M8 X 1,25 X 20mm Cl8.8 Rt	4
4	5024010073-5	Smooth Washer Ø8,5 X Ø20 X 2,00mm	4
5	5530018441-2	Fertilizer Bin Support	1
6	6020010004-5	Pressure Washer M8 Media	4
7	6020310454-8	Hexagonal Nut M8 X 1,25 Ma Cl8 Ch.13mm H.6,50mm	4
8	5204010585-9	Complete Fertilizer Distributor Hub	2
9	5256030018-2	Sprocket 17 Teeth	1
10	5558100005-6	Lock	1
11	6020390293-2	Lock Ø5,75 X 40mm	1
12	6020310822-5	Hexagonal Nut M10 X 1,50 Ma Cl8 Ch.17mm H.8,00mm	6
13	6020010394-0	Pressure Washer M10 Media	6
14	5106010026-1	Funnel Cover Of 224mm	1
15	5024010075-1	Smooth Washer Ø10,3 X Ø25 X 2,00mm	5
16	6020310437-8	Hexagonal Head Bolt M10 X 1,50 X 35mm Cl8.8 Rt	5
17	5024010328-9	Stainless Washer 20 X Ø48 X 2,50mm	2
18	5232060236-0	Shaft Sq.3/4" X 400mm	1
19	5400010106-3	Right Spiral Spring Q21 X 195 X 7,93mm (Pace 50,80mm)	1
20	5024070007-4	Smooth Washer Ø20 X Ø56,5 X 3,00mm	1
21	5558010551-2	Shaft Lock 3/4" square	1
22	6020310448-3	Hexagonal Head Bolt M8 X 1,25 X 25mm Cl8.8 Rt	1
23	5538014969-8	Fertilizer Dosing Cover	1
24	6020395063-5	Tie rod M10X58mm	1
25	5204010587-5	Hub With Hole Q20mm	1
26	6020016051-0	O'Ring 2-327 N3006-90 Nbr (Ø43.82mm)	1
27	6020030912-2	Smooth Bushing Ø40Xø44X30mm Metal-Polymer	1
28	6020351084-8	Retainer Ø35.00 X Ø44.50 X 7.00mm	1
29	5204010586-7	Fertilizer Distributor Hub	1
30	6020390869-8	Cover Of Fertilizer/Seed Plastic Hopper 65 Liters (Black)	1
31	6020055065-2	Plastic Box For Fertilizer 65 Liters Without Cover	1
		Optional	
32	6020250464-0	Right Helical Conductor Sq.21 X 195 X 7,93mm(Pace 15,88mm)	1
33	6020250285-0	Right Helical Conductor Sq.21 X 195 X 7,93mm(Pace 25,40mm)	1

• Fertilizer Box - Fertisvstem Doser

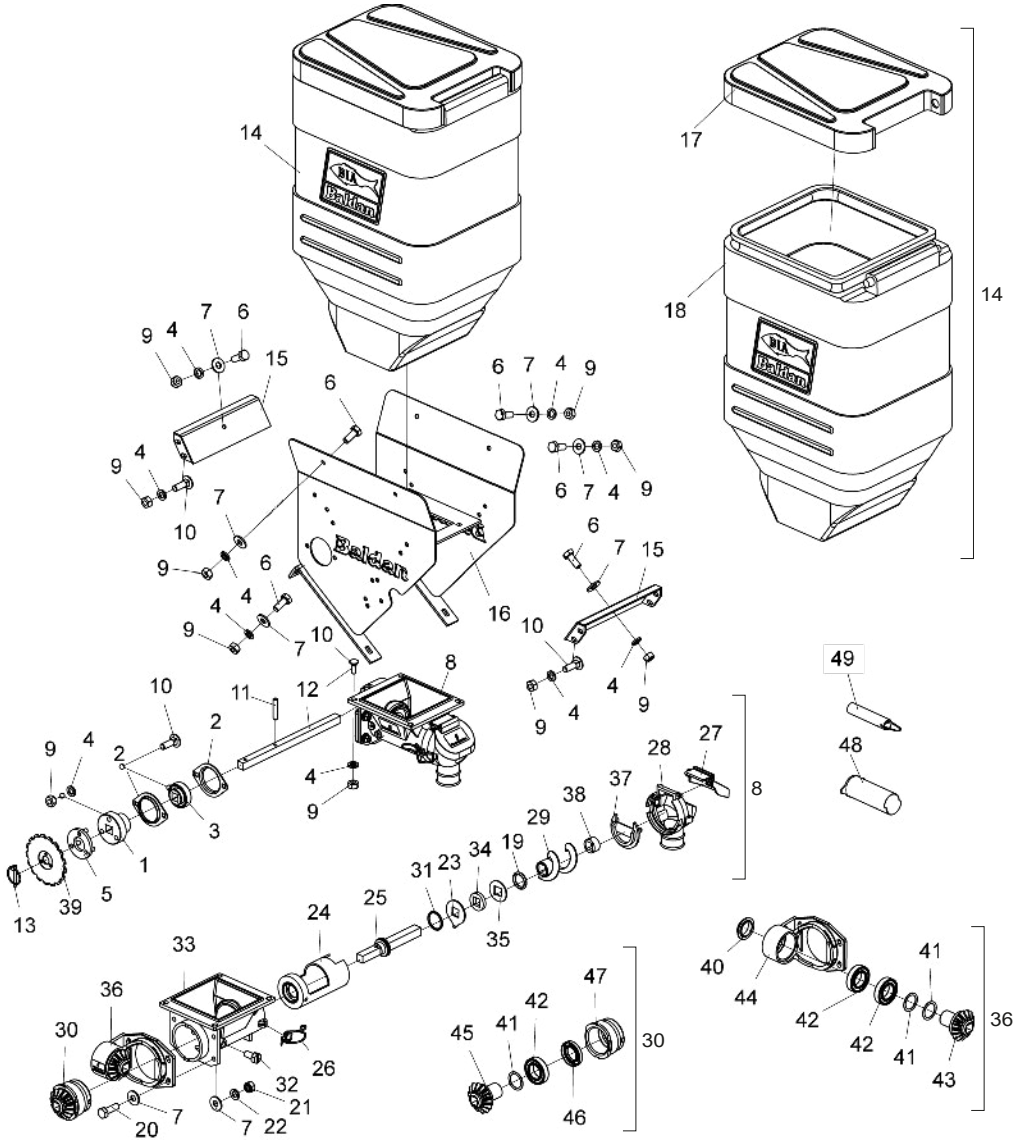

Item	Code	Product description	All
1	5204010411-9	Small Hub With Hole Sq 20mm	1
2	6020250412-7	Steel Plate Bearing 03.52 Mst	2
3	6020250117-9	Bearing Assy F-110934.1	1
4	6020010004-5	Pressure Washer M8 Media	20
5	5558100005-6	Lock	1
6	6020311269-9	Hexagonal Head Bolt M8 X 1,25 X 20mm Cl8.8 Rt	6
7	5024010073-5	Smooth Washer Ø8,5 X Ø20 X 2,00mm	14
8	6020057987-1	Batcher Kit Fertisystem Auto-Lub Ap/2E Ng Me(Fertisystem 11040000)	1
9	6020310454-8	Hexagonal Nut M8 X 1,25 Ma Cl8 Ch.13mm H.6,50mm	20
10	6020317457-0	French Head Bolt M8 X 1,25 X 25mm Cl8.8 Rt	14
11	6020310471-8	Heavy Elastic Pin Ø6 X 30mm	1
12	5232011419-5	Shaft Sq.5/8" X 284mm	1
13	6020390293-2	Lock Ø5,75 X 40mm	1
14	6020055321-0	Plastic Box For Fertilizer 65 Liters With Cover	1
15	5558010388-9	Lock Of Fertilizer Box	2
16	5530017735-1	Box Support	1
17	6020390869-8	Cover Of Fertilizer/Seed Plastic Hopper 65 Liters (Black)	1
18	6020055322-8	Plastic Box For Fertilizer 65 Liters Without Cover	1
19	6020010008-8	O´Ring Fk1-209 3,5 X 17,5-Ref 2209(100103004)	1
20	6020310561-7	Hexagonal Head Bolt M8 X 1,25 X 25mm Cl 5.8 Rt	4
21	6020317449-0	Self-Locking Nut With Nylon Low M8 X 1,25 Ma Cl8 Ch.13mm H.8,00mm	4
22	6020010404-0	Pressure Washer 5/16" Media Industry	4
23	6020010504-7	Cleaning Washer (200201004)	1
24	6020350530-5	Coat (300304002)	1
25	6020090686-4	Shaft Ng(Fertysystem 200201038)	1
26	6020310680-0	Clamp 0,70	2
27	6020051127-4	Nozzle Cover Kit Ng(300304006)Emb. C/ 5	1
28	6020030302-7	Nozzle Ng(200201014)	1
29	6020370258-5	Spring S 2" Left "Optional"(Fertisystem 300305004)	1
30	6020310619-2	Internal Bearing Assembly(450451001)	1
31	6020010041-0	O´Ring 2-219 N3009-90Nbr (32,92)	1
32	6020310295-2	Hexaon Head Slotted Bolt M8 X 16mm (200205002)	2
33	6020051128-2	Main Body Ng(200201013)	1
34	6020110095-2	Felt (07000023)	1
35	6020010503-9	Square Inox Washer (200202011)	1
36	6020250494-1	Self Lubricating Bearing Assembly(450451002)	1
37	6020390067-0	Transversal Cover (200201008)	1
38	6020010230-7	Lock Ring (200201007)	1
39	5256030018-2	Sprocket 17 Teeth	1
40	6020310604-4	Bearing Protection (200201011)	1
41	5024010243-6	Smooth Washer Ø30 X Ø39 X 0,91mm	1
42	6020350006-0	Bearing 6006 2Rs Ddu	3
43	6020310580-3	Actuation Pinion(200201012)	1
44	6020250417-8	Bearing Auto-Lub (07000070)	1
45	6020310909-4	Pinion Drive	1
46	6020350320-5	Retainer	1
47	6020030074-5	Bushing (200201010)	1
48	6020390093-0	Maintenance Tube	1
49	6020390092-1	Fixator Tube - "Optional" (300303005)	1

• Seed Box - Baldan System

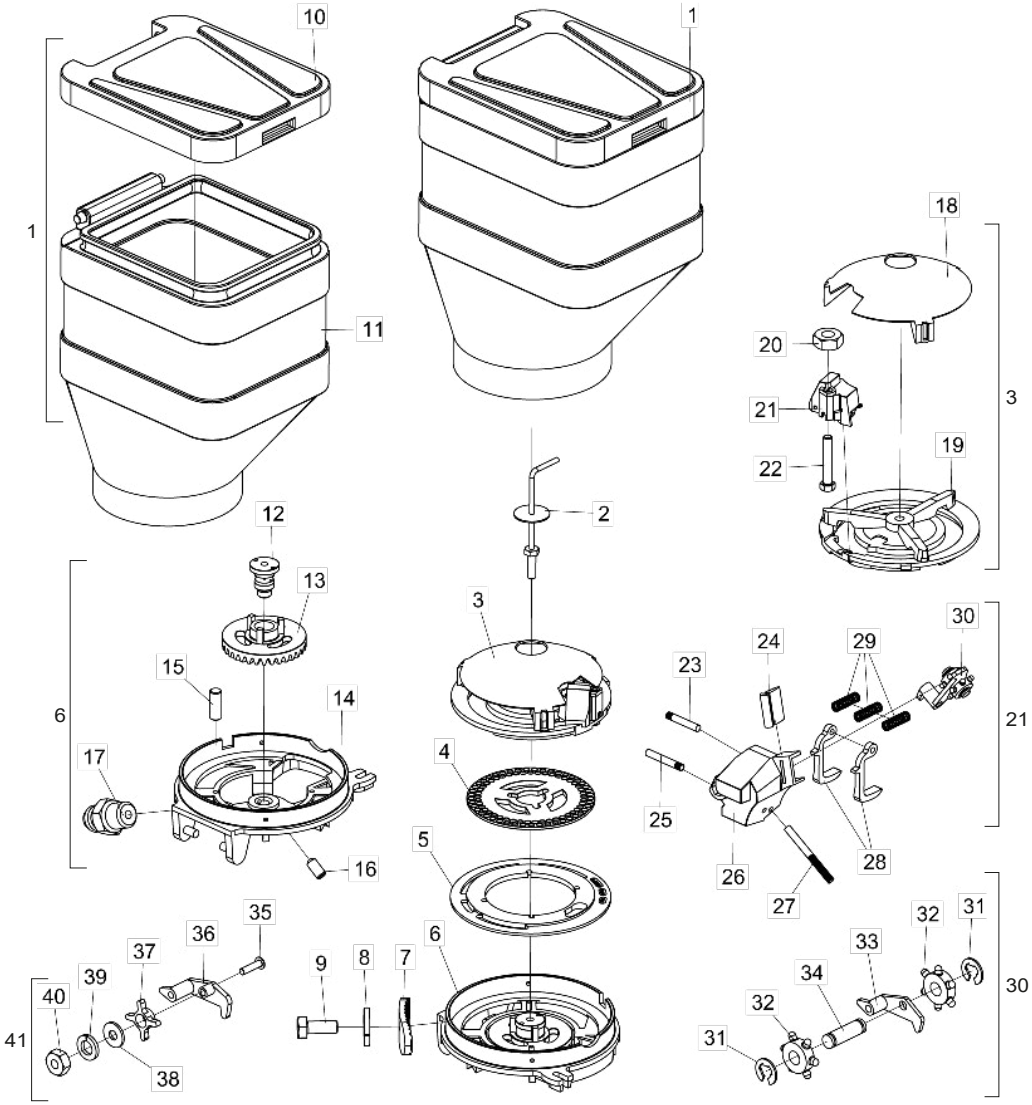

Item	Code	Product	Todos
1	6020055068-7	Plastic Box For Seed 45 Liters With Cover	1
2	5420010103-3	Seed Hopper Bolt	1
3	6020370157-0	Complete Upper Support Of Distriutor Disc	1
4	6020070009-3	Soy Deam Distributor Disc 90H Ø8,5mm (Ø43 X Ø186 X 4,50mm)	1
5	5220020085-3	Metallic Dual Side Disc (Ø132 X Ø233 X 7,50mm)	1
6	5044010348-8	Seed Distributor Base	1
7	5530011945-9	Seed Box Fixation Support	4
8	6020010122-0	Pressure Washer M6 Media	4
9	6020310291-0	Hexagonal Head Bolt M6 X 1,00 X 15mm Cl8.8 Rt	4
10	6020390869-8	Cover Of Fertilizer/Seed Plastic Hopper 65 Liters (Black)	1
11	6020055067-9	Plastic Box For Seed 45 Liters Without Cover	1
12	5232012000-4	Seed Distributor Shaft	1
13	5164020004-2	Crown Of 33 Teeths	1
14	5044010347-0	Seed Distribuotoor Base	1
15	5432090085-1	Flat Pin Ø6,8 X 18mm With	2
16	6020310259-6	Allen Bolt S/C M6 X 1,00 X 12mm Ma Cl12.9 Rt(Phosphatized)	1
17	6020130100-1	Grease Fitting 1/4"	1
18	6020390405-6	Protection Cover Of Seed	1
19	6020370142-2	Upper Support Of Distriutor Disc	1
20	6020310744-0	Hexagonal Nut 5/16" 18F Unc Gr5 Ch.1/2" Height 6,50mm	1
21	6020050423-5	Complete Seed Distributor Box	1
22	6020311025-4	Hexagonal Head Bolt 5/16" X 2" 18F Unc1A Gr2 Rp	1
23	6020310425-4	Pin Ø5 X 30mm	1
24	6020310607-9	Protection	1
25	6020310424-6	Pin Ø5 X 34mm	1
26	6020050404-9	Seed Distributor Box	1
27	6020310423-8	Pin Ø5 X 52mm	1
28	6020130207-5	Trigger Seed Cleaner	2
29	6020250328-7	Helical Spring Ø8 X Ø9,7 X 29,5mm	3
30	6020130206-7	Trigger Cleaner	1
31	6020010246-3	Retaining Ring Rs-05	2
32	6020350784-7	Seed Batcher Rossete	2
33	6020130205-9	Batcher Trigger	1
34	6020310526-9	Plastic Pin Ø7 x 18.5 x 23.5	1
35	6020310122-0	Bolt 3/16" X 3/4" 24F Unc1A Gr5 Rt	1
36	6020130204-0	Trigger-Support Of Rossete	1
37	6020350876-2	Batcher Rossete With Hole Ø8,3mm	1
38	5024010423-4	Smooth Washer Ø5,5 X Ø12,7 X 1,21mm	1
39	6020010400-8	Pressure Washer 3/16" Media Industry	1
40	6020310740-7	Hexagonal Nut 3/16" 24F Unc Gr5 Ch.3/8" Height 4,50mm	1
41	6020350116-4	Complete Rossete	1

Note: The seed box is made up of all the parts listed in this list, but when sold complete, items 35 to 41 will not come with it.

• Seed box - Universal System

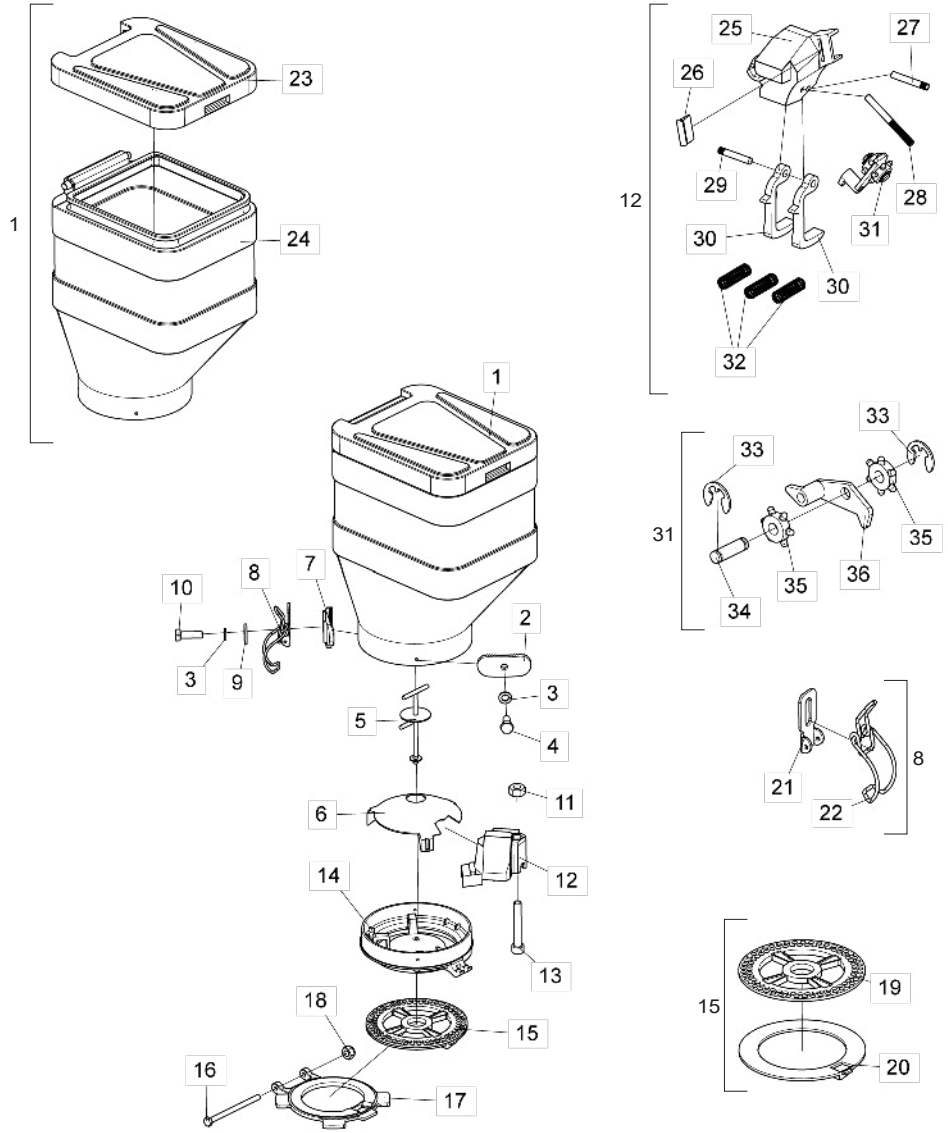

Item	Code	Porduct description	All
1	6020055068-7	Plastic Box For Seed 45 Liters With Cover	1
2	5530011945-9	Seed Box Fixation Support	2
3	6020010122-0	Pressure Washer M6 Media	4
4	6020310291-0	Hexagonal Head Bolt M6 X 1,00 X 15mm Cl8.8 Rt	2
5	5420010104-1	Bolt of Seed Hopper	1
6	6020390103-0	Protection Cover Of Universal System Seed	1
7	5530011969-6	Seed Box Fixation Support	2
8	5460010005-2	Complete Wire Clamp	2
9	5024010161-8	Smooth Washer Ø7 X Ø18 X 2,00mm	2
10	6020312403-4	Hexagonal Head Bolt M6 X 1,00 X 20mm Cl8.8 Rt	2
11	6020310454-8	Hexagonal Nut M8 X 1,25 Ma Cl8 Ch.13mm H.6,50mm	1
12	6020050423-5	Complete Seed Distributor Box	1
13	6020310903-5	Allen Bolt M8 X 1,25 X 55mm Cl12.9 Rp	1
14	5044010353-4	Universal Seed Distributor Base	1
15	5220010140-5	Soy Deam Distributor Disc 90F Ø8mm(Ø35,10 X Ø189 X 4,50mm)With Ring 4,00mm	1
16	6020310562-5	Hexagonal Head Bolt M8 X 1,25 X 115mm Cl8.8 Rp	1
17	5044010294-5	Articulation Base Universal System (2013)	1
18	6020317449-0	Self-Locking Nut With Nylon Low M8 X 1,25 Ma Cl8 Ch.13mm H.8,00mm	1
19	6020071801-4	Soy Deam Distributor Disc 90H Ø8mm (Ø35,10 X Ø189 X 4,50mm) Rampflow (Orange)	1
20	6020015810-8	Soy Ring Mod U 4mm Plain (Orange) (1020022)	1
21	5530010935-6	Fixation Support Of Clamp	1
22	6020310680-0	Clamp 0,70	1
23	6020390869-8	Cover Of Fertilizer/Seed Plastic Hopper 65 Liters (Black)	1
24	6020055067-9	Plastic Box For Seed 45 Liters Without Cover	1
25	6020050404-9	Seed Distributor Box	1
26	6020310607-9	Protection	1
27	6020310424-6	Pin Ø5 X 34mm	1
28	6020310423-8	Pin Ø5 X 52mm	1
29	6020310425-4	Pin Ø5 X 30mm	1
30	6020130207-5	Trigger Seed Cleaner	2
31	6020130206-7	Trigger Cleaner	1
32	6020250328-7	Helical Spring Ø8 X Ø9,7 X 29,5mm	3
33	6020010246-3	Retaining Ring Rs-05	2
34	6020310526-9	Plastic Pin Ø7 x 18.5 x 23.5	1
35	6020350784-7	Seed Batcher Rossete	2
36	6020130205-9	Batcher Trigger	1

• Distributor Base Seed - Titanium

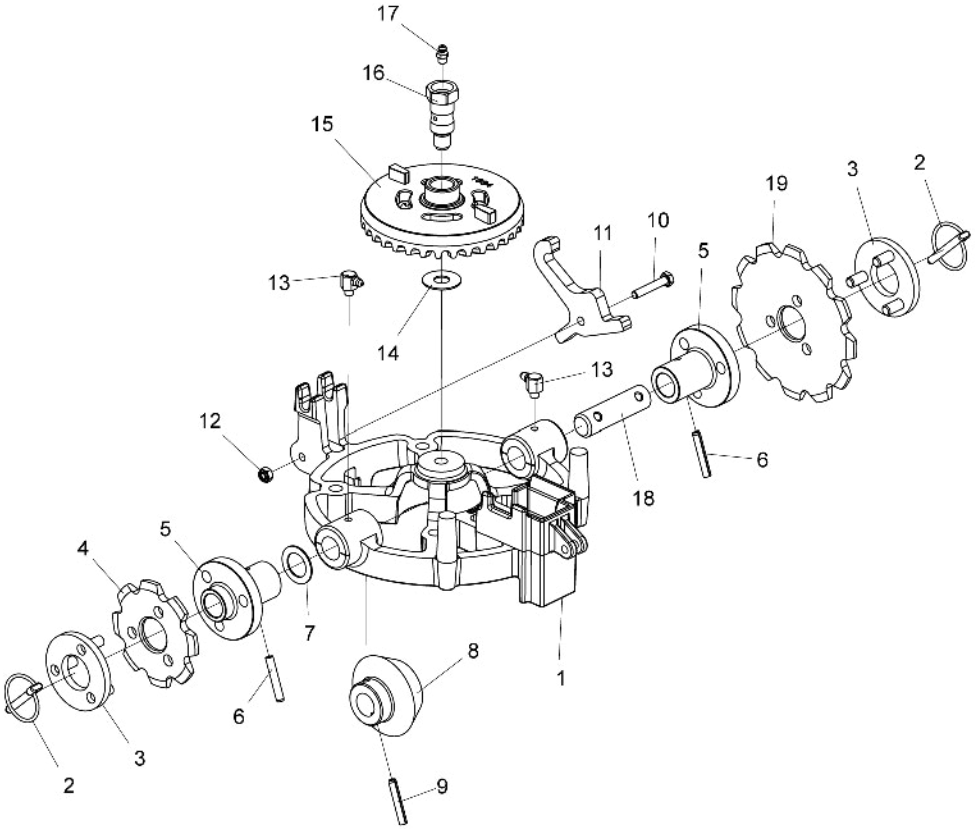

Item	Code	Product description	All
1	5530018332-7	Base Support From the Machined Universal Distributor	1
2	6020390293-2	Lock Ø5,75 X 40mm	2
3	5558100005-6	Lock	2
4	5256030006-9	Sprocket 8 Teeth	1
5	5204010544-1	TRansmission Shaft Hub	2
6	6020310485-8	Heavy Elastic Pin Ø6 X 36mm	2
7	5024010160-0	Smooth Washer Ø20 X Ø31 X 1,21mm	1
8	5428010055-5	15 Teeth Pinion	1
9	6020310488-2	Heavy Elastic Pin Ø6 X 32mm	1
10	6020310898-5	Hexagonal Head Bolt M6 X 1,00 X 35mm Cl8.8 Rt	1
11	5558010574-1	Seed Box Latch	1
12	6020317442-2	Self-Locking Nut With Nylon Low M6 X 1,00 Ma Cl8 Ch.10mm H.6,00mm	1
13	6020130106-0	Grease Fitting 1/4"	2
14	5024010027-1	Flat Washer Ø12.3 X Ø30 X 1.21mm	1
15	5164010022-6	33 Teeth Crown	1
16	5232012318-6	Crown And Pinion Fixing Shaft	1
17	6020130100-1	Grease Fitting 1/4"	1
18	5232012518-9	Transmission Shaft Universal System	1
19	5256030012-3	Sprocket 12 Teeth	1

• Hydraulic System For Row Marker - Optional

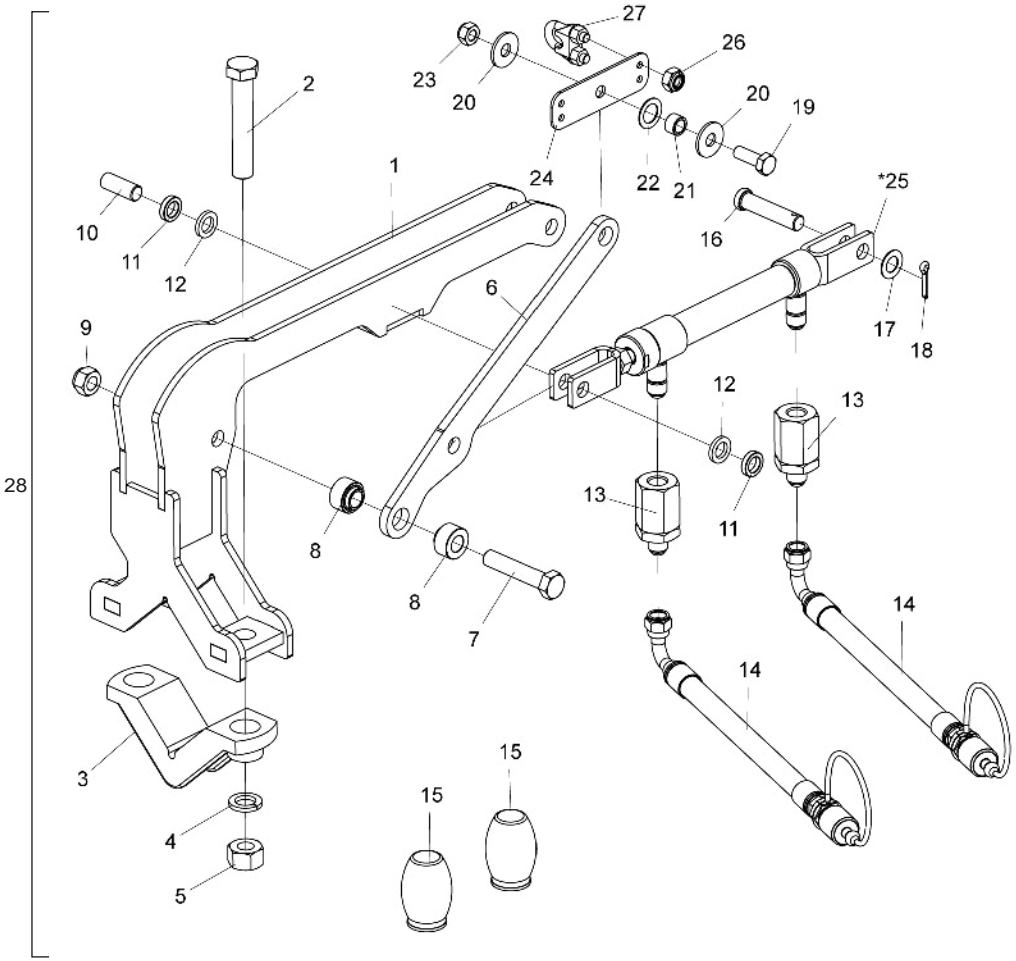

Item	Code	Product description	All
1	5530017731-9	Support Of Cylinder	1
2	6020310352-5	Hexagonal Head Bolt M20 X 2,50 X 110mm Cl8.8 Rp	2
3	6010600770-8	Clamp	1
4	6020010403-2	Pressure Washer M20 Media	2
5	6020310770-9	Hexagonal Nut 3/4" 10F Unc Gr5 Ch.1.7/32" Height 18,50mm	2
6	5008010262-0	Row Marker Thrust Handle	1
7	6020310186-7	Hexagonal Head Bolt M16 X 2,00 X 80mm Cl8.8 Rp	1
8	5080011974-7	Support Bushing	2
9	6020317443-0	Self-Locking Nut With Nylon M16 X 2,00 Ma Cl8 Ch.24mm H.16,00mm	1
10	5432010925-9	Flat Pin Ø5/8" X 42mm	1
11	5024010372-6	Smooth Washer Ø16 X Ø25 X 6,00mm	2
12	5024010316-5	Smooth Washer Ø16,4 X Ø26,5 X 4,00mm	2
13	5412010402-3	Reductor Nipple Ø0,4mm Screw 3/4" 16F Jic	2
14	5372011612-6	Hose Ø3/8" W/1Trf And 1Tcg X 1900mm	2
15	6020030170-9	Absorver Shock	2
16	6020310942-6	Round Head Pin Ø5/8" X 65mm	1
17	5024010059-0	Smooth Washer Ø16,5 X Ø29 X 1,21mm	1
18	6020050104-0	Cotterpin 3/16" X 1"	1
19	6020310439-4	Hexagonal Head Bolt M12 X 1,75 X 35mm Cl8.8 Rt	1
20	5024010068-9	Smooth Washer Ø13,3 X Ø35,5 X 3,00mm	2
21	5080020190-7	Bushing Of Ø13 X Ø19 X 12mm	1
22	5024010160-0	Smooth Washer Ø20 X Ø31 X 1,21mm	1
23	6020310847-0	Self-Locking Nut With Nylon M12 X 1 ,75 Ma Cl8 Ch.19mm H.12,00mm	1
24	5136018704-0	Fixing Plate	1
*25	6020059191-0	Hydraulic Cylinder "D.A" Ø1/2" X Ø1" X 150mm(Course) X 393mm(Closed)	1
26	6020317442-2	Self-Locking Nut With Nylon Low M6 X 1,00 Ma Cl8 Ch.10mm H.6,00mm	4
27	6020130291-1	Crosby Clamp For 5/16" Steel Cable	2
28	5528011049-2	Hydraulic System For Row Marker For PLB	1

* Item 25 - See page 24

• Complete Rubber Compactor Wheel - Optional

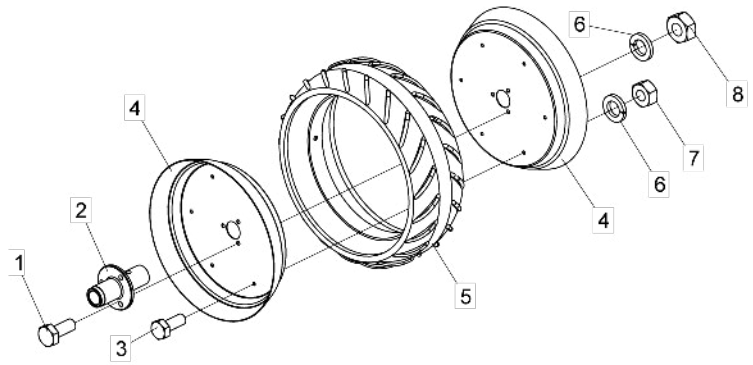

Item	Code	Product description	All
1	6020310452-1	Hexagonal Head Bolt M10 X 1,50 X 25mm Cl8.8 Rt	3
2	5204010369-4	Wheel Hub	1
3	6020311269-9	Hexagonal Head Bolt M8 X 1,25 X 20mm Cl8.8 Rt	6
4	5018010015-3	Compactation Wheel Rim	2
5	6020030182-2	Rubber Compactation Wheel	1
6	6020010004-5	Pressure Washer M8 Media	9
7	6020310454-8	Hexagonal Nut M8 X 1,25 Ma Cl8 Ch.13mm H.6,50mm	6
8	6020310822-5	Hexagonal Nut M10 X 1,50 Ma Cl8 Ch.17mm H.8,00mm	3

• Line Marker Hydraulic Cylinder

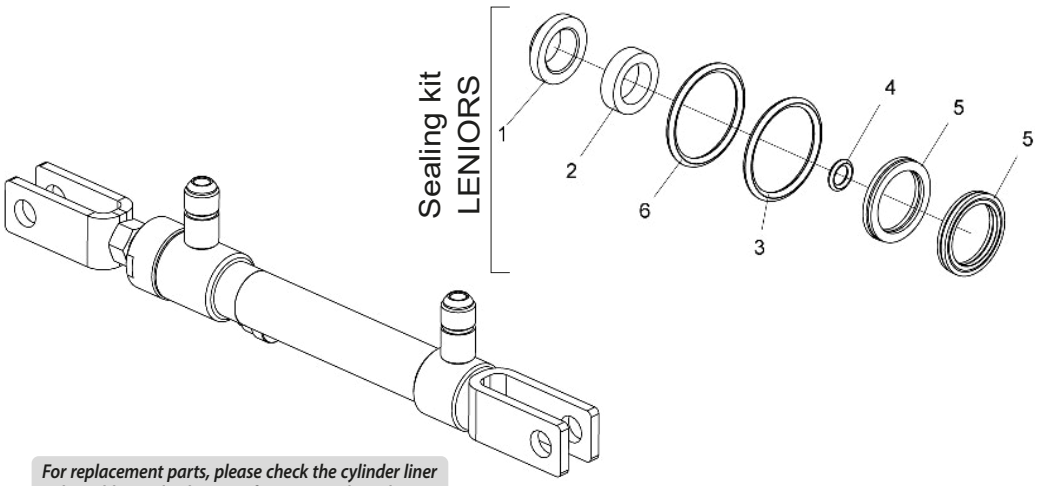

For replacement parts, please check the cylinder liner - The Baldan code, the manufacturer's code and name and the date of manufacture.

Item	Code	Product description	All
		Sealing kit LENIORS	
1	J019826	Cleaner D-500	1
2		Gasket Std 1250-750	2
3		Parback 8-021	2
4		O´Ring 2-010 (Ø6,07 x Ø1,78mm)	1
5		O´Ring 2-022 (Ø25,12 x Ø1,78mm)	2
6		Gasket B 1250-500-250B	1
-	6020190221-8	Repair Kit Leniors J019826	1

*Note: Hydraulic line marker - See page 21

• Complete Cover Disc

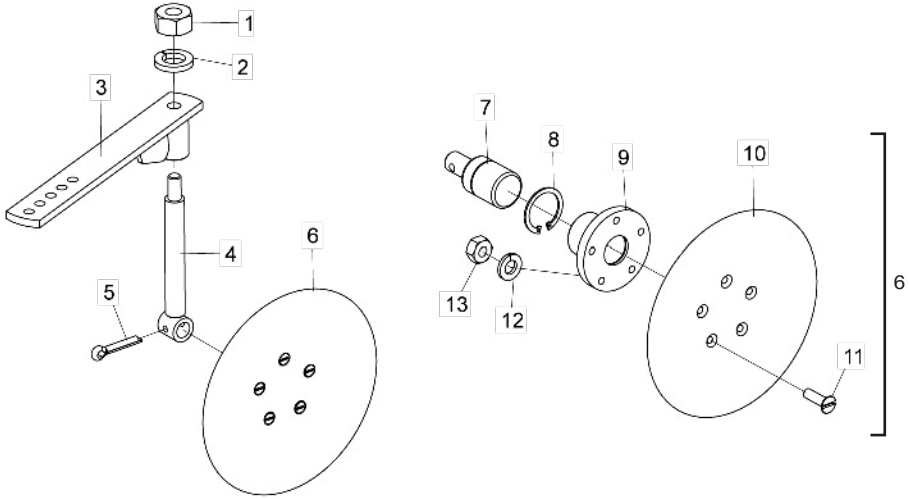

Item	Code	Product description	All
1	6020310820-9	Hexagonal Nut M12 X 1,75 Ma Cl8 Ch.19Mm H.10,00Mm	1
2	6020010395-8	Pressure Washer M12 Media	1
3	5072010004-2	Arm Of Disc	1
4	5232012001-2	Shaft Of Cover Disc	1
5	6020050113-9	Cotterpin 1/4" X 1.1/4"	1
6	5204020013-4	Complete Hub With Cover Disc	1
7	6020350045-1	Bearing F110053-1 With Hole 1/4"	1
8	6020010282-0	Retention Oring I-30 G502-030-01	1
9	5204010022-9	Cover Disc Hub	1
10	2644346501-3	Concave Plain Disc Blade 8.1/2 X 3,00 5H Rd 7Mm R=32,5Mm Single Bevel	1
11	6020310388-6	Simple Slotted Plain Head Bolt (Thread Machined) M6 X 1,00 X 20Mm Cl8.8 Rt	5
12	6020010122-0	Pressure Washer	5
13	6020311257-5	Hexagonal Nut M6 X 1,00 Ma Cl8 Ch.10Mm H.5,00Mm	5

• Complete Depth Wheel

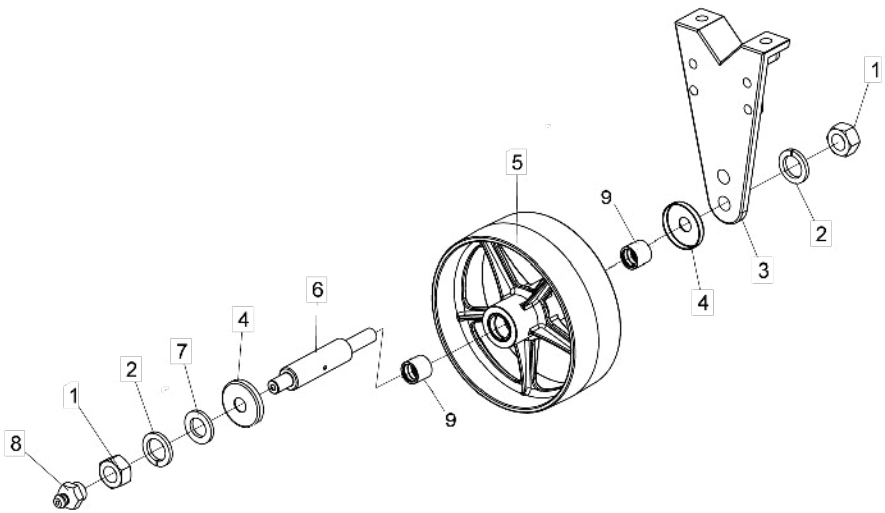

Item	Code	Product description	All
1	6020310457-2	Hexagonal Nut M24 X 3,00 Ma Cl8 Ch.36mm H.19,00mm	2
2	6020010196-3	Pressure Washer M24 Media (	2
3	5530400013-8	Wheel Support	1
4	5096010011-2	Protective Cap Of Shaft	2
5	5498010254-0	Complete Depth Wheel (Bushing)	1
6	5232011995-2	Depth Wheel Shaft	1
7	5024010039-5	Smooth Washer Ø26,2 X Ø44 X 4,75mm	1
8	6020130108-7	Grease Fitting 1/8"	1
9	6020031016-3	Bronze Bushing	2

• Double Disc (Fertilizer)

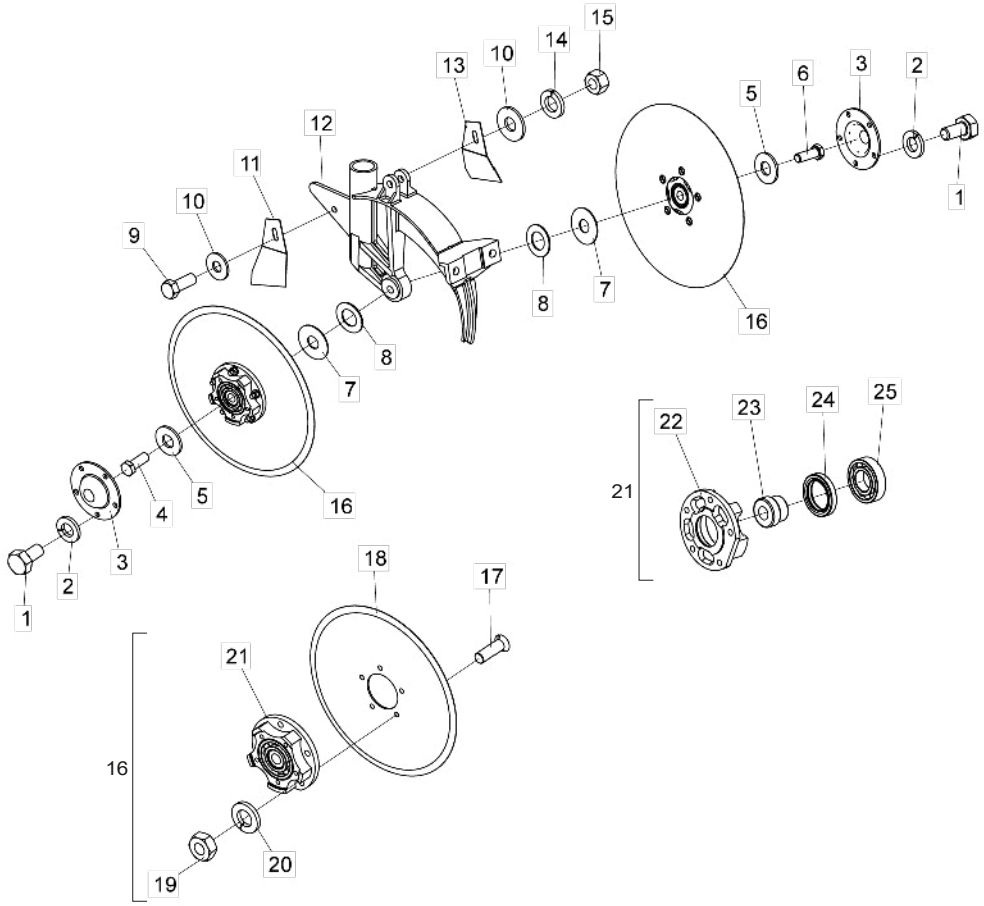

Item	Code	Product description	All
1	6020311000-9	Hexagonal Head Bolt 1/4" X 1/2" 20F Unc1A Gr5 Rt	10
2	6020010402-4	Pressure Washer 1/4" Media Industry	10
3	5096030002-2	Cover Of Double Disc Hub	2
4	6020311074-2	Hexagonal Head Bolt 5/8" X 1.3/4" 11F Unc1A Gr5 Rp	1
5	5024010239-8	Smooth Washer Ø16,5 X Ø37 X 3,00Mm	2
6	6020311073-4	Hexagonal Head Bolt 5/8" X 1.3/4" 11F Unc1A Gr5 Rp	1
7	5024010051-4	Smooth Washer Ø16 X Ø44 X 1,21Mm	2
8	5024010059-0	Smooth Washer Ø16,5 X Ø29 X 1,21Mm	4
9	6020310452-1	Hexagonal Head Bolt M10 X 1,50 X 25Mm Cl8.8 Rt	1
10	5024010075-1	Smooth Washer Ø10,3 X Ø25 X 2,00Mm	2
11	5352030047-0	Right Scraper Of Discs	1
12	5112020017-1	Double Disc Housing	1
13	5352030048-8	Left Scraper Of Discs	1
14	6020010394-0	Pressure Washer M10 Media	1
15	6020310822-5	Hexagonal Nut M10 X 1,50 Ma Cl8 Ch.17Mm H.8,00Mm	1
16	5204010348-1	Complete Hub (Plain Disc Ø13" X 3,00Mm) 5 Holes	2
17	6020310235-9	Plain Head Bolt M8 X 1,25 X 25Mm Cl8.8 Rt	10
18	2853346539-2	Coulter Plain Disc Blade 13 X 3,00 Hc Rd 68,6Mm + 5H Rd 8,8Mm R=47,5Mm Single Bevel	2
19	6020310454-8	Hexagonal Nut M8 X 1,25 Ma Cl8 Ch.13Mm H.6,50Mm	10
20	6020010004-5	Pressure Washer M8 Media	10
21	5204020094-0	Assembled Hub	2
22	5204020026-6	Double Disc Hub (Spare)	2
23	5080010042-6	Bushing	2
24	6020350259-4	Retainer Ø35,00 X Ø50,00 X 8,00Mm	2
25	6020350020-6	Bearing 6206	2

• Double Disc (Seed)

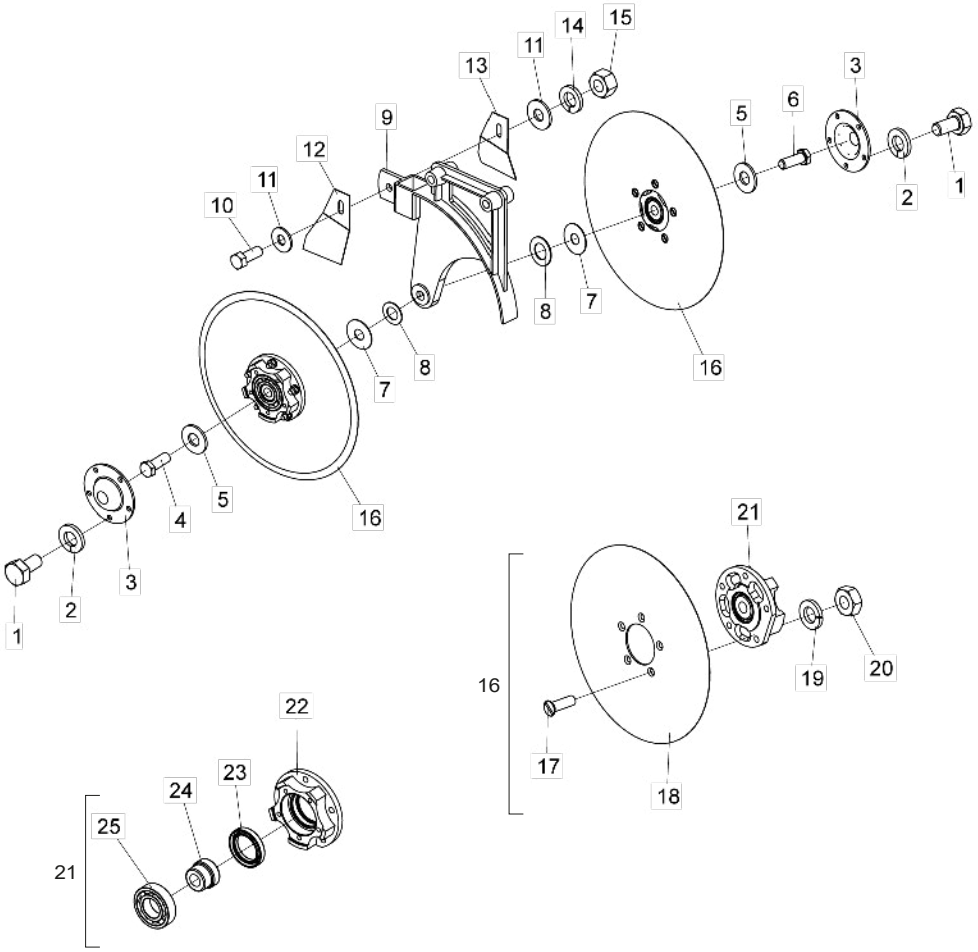

Item	Code	Product description	All
1	6020311000-9	Hexagonal Head Bolt 1/4" X 1/2" 20F Unc1A Gr5 Rt	10
2	6020010402-4	Pressure Washer 1/4" Media Industry	10
3	5096030002-2	Cover Of Double Disc Hub	2
4	6020311074-2	Hexagonal Head Bolt 5/8" X 1.3/4" 11F Unc1A Gr5 Rp	1
5	5024010239-8	Smooth Washer Ø16,5 X Ø37 X 3,00Mm	2
6	6020311073-4	Hexagonal Head Bolt 5/8" X 1.3/4" 11F Unc1A Gr5 Rp	1
7	5024010051-4	Smooth Washer Ø16 X Ø44 X 1,21Mm	2
8	5024010059-0	Smooth Washer Ø16,5 X Ø29 X 1,21Mm	4
9	5530410050-7	Support Of Double Disc For Seed (Conventional)	1
10	6020310452-1	Hexagonal Head Bolt M10 X 1,50 X 25Mm Cl8.8 Rt	1
11	5024010075-1	Smooth Washer Ø10,3 X Ø25 X 2,00Mm	2
12	5352030047-0	Right Scraper Of Discs	1
13	5352030048-8	Left Scraper Of Discs	1
14	6020010394-0	Pressure Washer M10 Media	1
15	6020310822-5	Hexagonal Nut M10 X 1,50 Ma Cl8 Ch.17Mm H.8,00Mm	1
16	5204010348-1	Complete Hub (Plain Disc Ø13" X 3,00Mm) 5 Holes	2
17	6020310235-9	Plain Head Bolt M8 X 1,25 X 25Mm Cl8.8 Rt	10
18	2853346539-2	Coulter Plain Disc Blade 13 X 3,00 Hc Rd 68,6Mm + 5H Rd 8,8Mm R=47,5Mm Single Bevel	2
19	6020010004-5	Pressure Washer M8 Media	10
20	6020310454-8	Hexagonal Nut M8 X 1,25 Ma Cl8 Ch.13Mm H.6,50Mm	10
21	5204020094-0	Assembled Hub	2
22	5204020026-6	Double Disc Hub	2
23	6020350259-4	Retainer Ø35,00 X Ø50,00 X 8,00Mm	2
24	5080010042-6	Bushing Of Rim	2
25	6020350020-6	Bearing 6206	2

• Cutting Disc

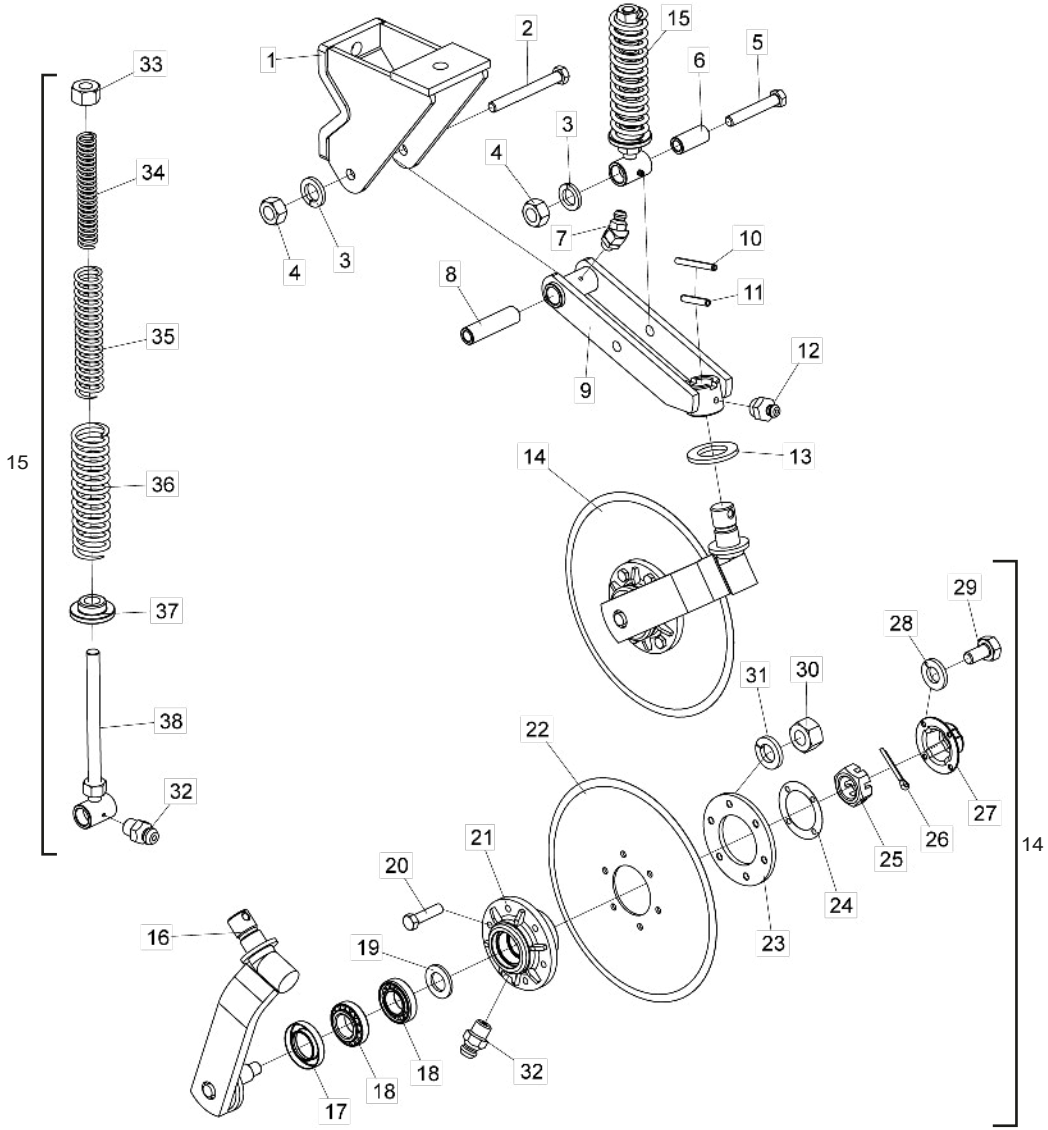

Item	Code	Product description	All	Smooth Plain Disc	Rippled Plain Disc
1	5530010049-9	Upper Support Of Coulter Disc	1		
2	6020310164-6	Hexagonal Head Bolt M16 X 2,00 X 140Mm Cl8.8 Rp	1		
3	6020010124-6	Pressure Washer M16 Media	2		
4	6020310818-7	Hexagonal Nut M16 X 2,00 Ma Cl8 Ch.24Mm H.13,00Mm	2		
5	6020310150-6	Hexagonal Head Bolt M16 X 2,00 X 100Mm Cl8.8 Rp	1		
6	5080020661-5	Bushing Of Ø16,2 X Ø26,5 X 57Mm	1		
7	6020130104-4	Grease Fitting 1/4"	1		
8	5080010195-3	Bushing Of Ø16,2 X Ø26,5 X 99Mm	1		
9	5530010050-2	Support Of Coulter Disc	1		
10	6020310472-6	Heavy Elastic Pin Ø6 X 55Mm		1	
11	6020310510-2	Heavy Elastic Pin Ø10 X 55Mm	1		
12	6020130108-7	Grease Fitting 1/8"	1		
13	5024010107-3	Smooth Washer Ø36 X Ø61 X 5,00Mm	1		
14	5124010023-5	Row Planter (Plain Disc Blade 14" X4Mm)		1	
14	5124010317-0	Row Planter (Rippled Plain Disc Blade 14"X4Mm)			1
15	5484010004-1	Complete Spring Regulator	1		
16	5530016348-2	Support W/Shaft Of Disc	2		
17	6020350244-6	Retainer Ø35,00 X Ø58,00 X 10,00Mm	2		
18	6020350077-0	Bearing 44610/49	4		
19	5024010024-7	Smooth Washer Ø20 X Ø38 X 1,21Mm		1	
20	6020310980-9	Hexagonal Head Bolt M10 X 1,50 X 40Mm Cl8.8 Rt		6	
20	6020310560-9	Hexagonal Head Bolt M8 X 1,25 X 35Mm Cl8.8 Rt			6
21	5204010499-2	Disc Hub	2		
22	2855397388-2	Coulter Plain Disc Blade 14 X 4,00 Hc Rd 80Mm + 6H Rd 10,3Mm D-115Mm Doble Bevel		1	
22	3255397203-4	Rippled Plain Disc Blade 14 X 4,00 Hc Rd 80Mm + 6H Rd 8,7Mm D=115Mm Doble Bevel			1
23	5284010001-4	Flange Of Disc Hub	2		
24	6020190098-3	Gascket Ø50,3 X Ø73,5 X 1/64"	2		
25	6020310780-6	Nut M20 X 2,50 Ma Cl8 Ch.30Mm H.16,00Mm Without Crown	2		
26	6020050101-5	Cotterpin 1/8" X 1"	2		
27	6020050640-8	Hub Cap	2		
28	6020010122-0	Pressure Washer M6 Media	8		
29	6020310291-0	Hexagonal Head Bolt M6 X 1,00 X 15Mm Cl8.8 Rt	8		
30	6020310822-5	Hexagonal Nut M10 X 1,50 Ma Cl8 Ch.17Mm H.8,00Mm		6	
30	6020310454-8	Hexagonal Nut M8 X 1,25 Ma Cl8 Ch.13Mm H.6,50Mm			6
31	6020010394-0	Pressure Washer M10 Media		6	
31	6020010124-6	Pressure Washer M16 Media			6
32	6020130100-1	Grease Fitting 1/4"	3		
33	6020310784-9	Hexagonal Nut 3/4" 10F Unc Gr5 Ch.1.1/4" Height 11,00Mm	1		
34	6020250208-6	Helical Spring Ø21 X Ø29 X 180Mm Wire=Ø4Mm Internal	1		
35	6020250206-0	Helical Spring Ø30,5 X Ø41,5 X 200Mm Wire=Ø5,5Mm	1		
36	6020250207-8	Helical Spring Ø43,5 X Ø57,5 X 200Mm Wire=Ø7Mm External	1		
37	6010600980-8	Back Bushing	1		
38	5232010030-5	Regulating Shaft With Bushing	1		

• Furrower W/ Complete Support

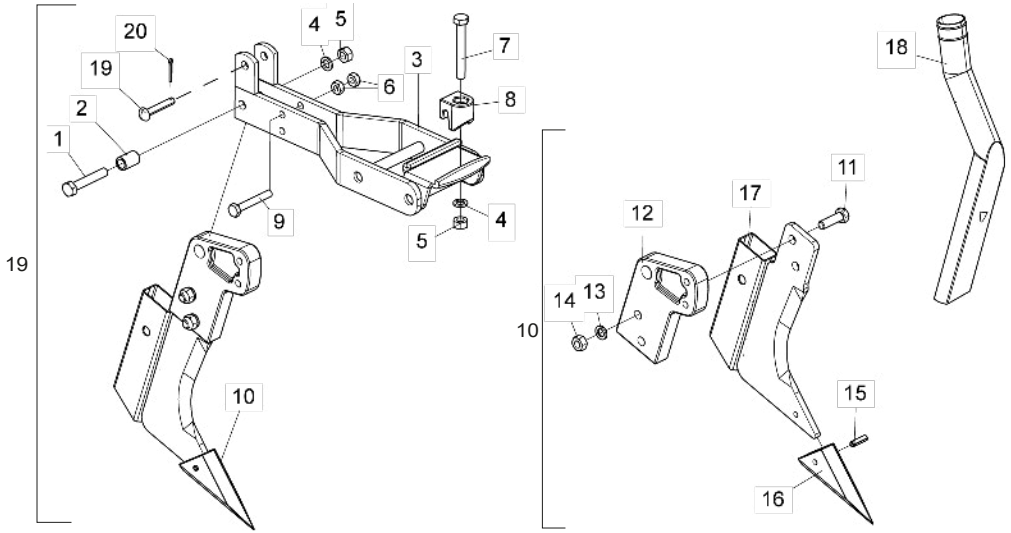

Item	Code	Product description	All
1	6020310978-7	Hexagonal Head Bolt M12 X 1,75 X 70Mm Cl8.8 Rt	1
2	5080010016-7	Articulation Bushing	1
3	5530010048-0	Support Of Forrower	1
4	6020010395-8	Pressure Washer M12 Media	2
5	6020310820-9	Hexagonal Nut M12 X 1,75 Ma Cl8 Ch.19Mm H.10,00Mm	2
6	6020310822-5	Hexagonal Nut M10 X 1,50 Ma Cl8 Ch.17Mm H.8,00Mm	2
7	6020317495-3	Hexagonal Head Bolt M12 X 1,75 X 90Mm Cl8.8 Rp	1
8	6010600896-8	Hitch Lock Of Discs Support	1
9	6020317444-9	Hexagonal Head Bolt M10 X 1,50 X 70Mm Cl8.8 Rt	1
10	5532010051-7	Furrower	1
11	6020310152-2	Hexagonal Head Bolt M12 X 1,75 X 40Mm Cl8.8 Rp	2
12	5530390016-0	Right Support	1
13	6020010395-8	Pressure Washer M12 Media	2
14	6020310820-9	Hexagonal Nut M12 X 1,75 Ma Cl8 Ch.19Mm H.10,00Mm	2
15	6020310490-4	Heavy Elastic Pin Ø8 X 28Mm	1
16	6010601364-3	Furrower Point	1
17	5532010039-8	Furrower Support	1
18	6020030118-0	Right Round Funnel	1
19	5432120061-6	Ø3/8" X 54mm French Head Pin	1
20	6020010403-2	M20 Medium Spring Washer	1
21	5532010050-9	Complete Furrower Of Tyne W/Support	1

Note: The Furrower (21) consists of all the parts listed in this list; however, when sold complete, items 18 to 20 are not included.

• Support W/Point

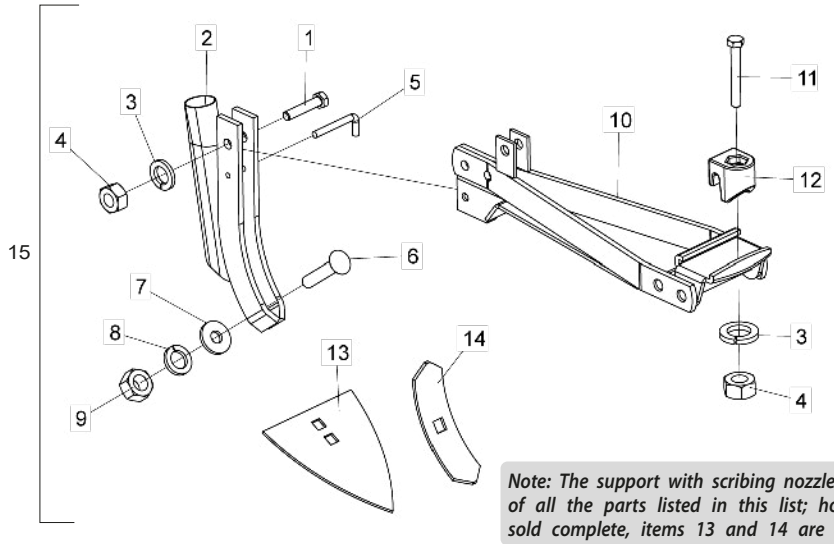

Note: The support with scribing nozzle (15) consists of all the parts listed in this list; however, when sold complete, items 13 and 14 are not included.

Item	Code	Product description	All
1	6020310210-3	Hexagonal Head Bolt M12 X 1,75 X 60Mm Cl8.8 Rt	1
2	5530080008-3	Support	1
3	6020010395-8	Pressure Washer M12 Media	2
4	6020310820-9	Hexagonal Nut M12 X 1,75 Ma Cl8 Ch.19Mm H.10,00Mm	2
5	5432020009-4	Pin "L" Ø6,8 X 26Mm	1
6	6020310273-1	French Head Bolt M16 X 2,00 X 80Mm Cl8.8 Rp	1
7	5024010298-3	Smooth Washer Ø17 X Ø44 X 4,75Mm(Galvanized)	1
8	6020010124-6	Pressure Washer M16 Media	1
9	6020310818-7	Hexagonal Nut M16 X 2,00 Ma Cl8 Ch.24Mm H.13,00Mm	1
10	5530014996-0	Support	1
11	6020317495-3	Hexagonal Head Bolt M12 X 1,75 X 90Mm Cl8.8 Rp	1
12	6010600896-8	Hitch Lock Of Discs Support	1
13	4708100005-7	Sweep 8" X 5,00Mm	1
14	4750100101-1	Sweep 8" X 2.1/4" X 5,00Mm	1
15	5530014999-4	Complete Support W/Point	1

• Distributor Discs - Baldan System

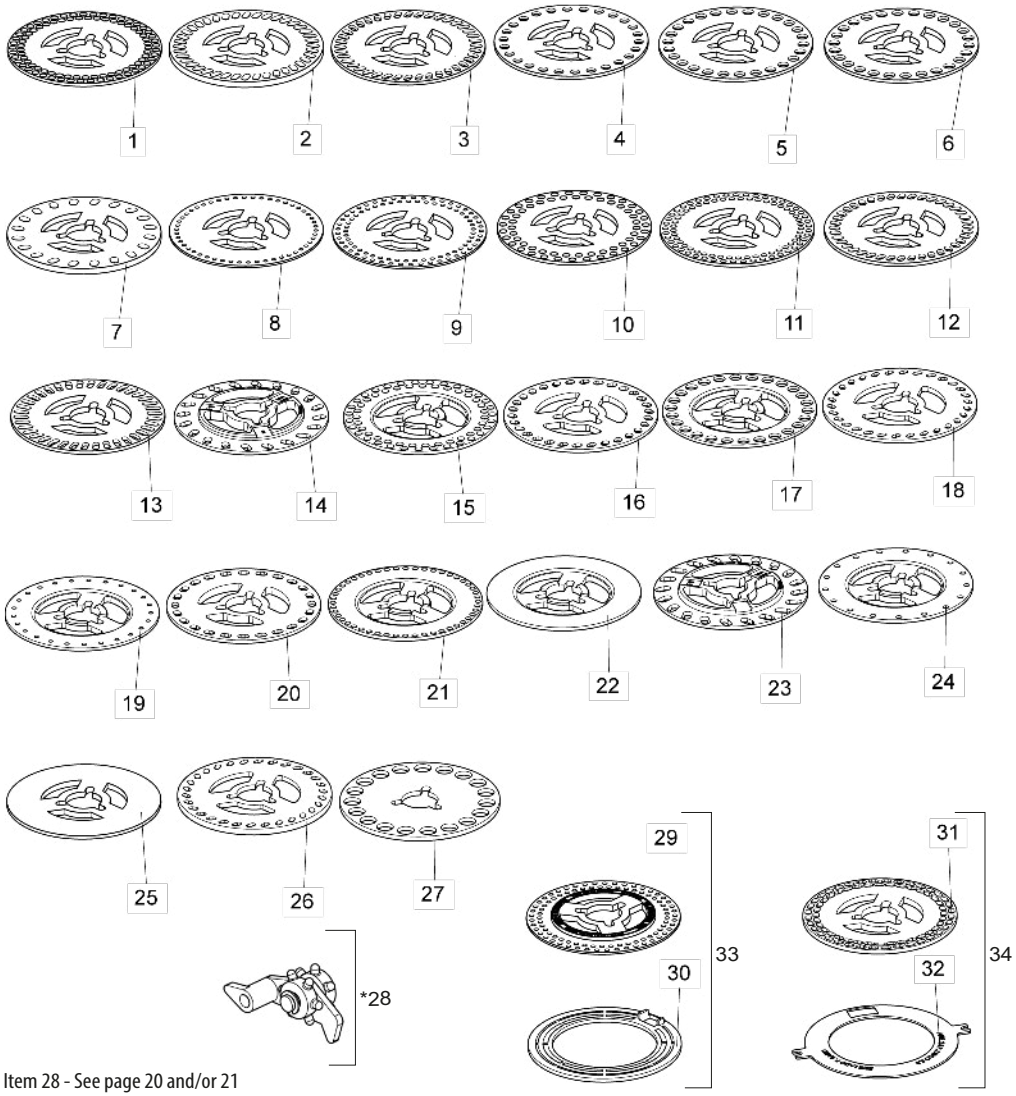

Item	Code	Product description	All
1	6020070009-3	Soy Deam Distributor Disc 90H Ø8,5mm (Ø43 X Ø186 X 4,50mm)	1
2	6020070002-6	Soy Distributor Disc 40H 8 X 16mm (Ø43 X Ø186 X 8,00mm)	1
3	6020070080-8	Soy Distributor Disc 40H 7,5 X 15mm (Ø43 X Ø186 X 4,50mm)	1
4	6020070072-7	Maize/Rice Distributor Disc 26H Ø11mm (Ø43 X Ø186 X 4,50mm)	1
5	6020070074-3	Maize/Rice Distributor Disc 26H Ø13mm (Ø43 X Ø186 X 4,50mm)	1
6	6020070070-0	Maize/Rice Distributor Disc 26H Ø13,5mm (Ø43 X Ø186 X 4,50mm)	1
7	6020070006-9	Beam Distributor Disc 20H 10 X 15mm (Ø43 X Ø186 X 8,00mm)	1
7	6020070102-2	Small Bean Distributor Disc 64H 8,5 X 13mm (Ø43 X Ø186 X 5,50mm)	1
7	6020070103-0	Sunflower Distribitor Disc 72H 7,5 X 12,5mm (Ø43 X Ø186 X 5,50mm)	1
8	6020070082-4	Sorgum Distributor Disc 50H Ø4,8mm (Ø43 X Ø186 X 3,00mm)	1
9	6020070087-5	Soy/Sorgum Distributor Disc 90H Ø5mm (Ø43 X Ø186 X 3,00mm)	1
10	6020070007-7	Soy Distributor Disc 62H Ø8,5mm (Ø43 X Ø186 X 4,50mm)	1
11	6020070086-7	Soy Deam Distributor Disc 90H Ø7mm (Ø43 X Ø186 X 4,50mm)	1
12	6020070088-3	Beam Distributor Disc 40H 8 X 13,5mm (Ø43 X Ø186 X 4,50mm)	1
13	6020070078-6	Soy Distributor Disc 38H 7,5 X 18mm (Ø43 X Ø186 X 4,50mm)	1
14	5220020095-0	Sunflower Distributor Disc 20F 5,5 X 13mm(Ø43 X Ø186 X 4,50mm)	1
15	5220020096-9	Soy Distributor Disc Double Rows 62F Ø9,5mm(Ø43 X Ø186 X 4,50mm)	1
15	6020070076-0	Soy Distributor Disc 34H 10,5 X 15mm (Ø43 X Ø186 X 4,50mm)	1
15	6020070004-2	Soy Distributor Disc 34H 10,5 X 15mm (Ø43 X Ø186 X 8,00mm)	1
16	5220020043-8	Seed Distributor Disc 30F 8.5 X 12mm Gray(Ø43 X Ø186 X 4.50mm)	1
17	5220020078-0	Maize Distributor Disc 26F Ø13,49mm(Ø43 X Ø186 X 4,00mm)	1
17	6020071726-3	Maize Distribitor Disc 28H Ø9,0mm (Ø43 X Ø186 X 4,50mm)	1
17	5220020081-0	Popcorn Maize Distributor Disc 48F Ø7,14mm(Ø43 X Ø186 X 4,00mm)	1
17	6020070890-6	Sweet Maize Distributor Disc 29H 8 X 12,5mm (Ø43 X Ø186 X 4,50mm)	1
18	5220020101-9	Cotton Distributor Disc 30F 5,5 X 11mm(Ø43 X Ø186 X 4,50mm)	1
19	5220020079-9	Disco Distributor De Remolacha 25F Ø5,56mm(Ø43 X Ø186 X 4,00mm)	1
20	5220020080-2	Disco Distributor De Remolacha 25F Ø5,56mm(Ø43 X Ø186 X 4,50mm)	1
20	5220020046-2	Maize Distributor Disc 24F 9 X 14mm(Ø43 X Ø186 X 4,50mm)	1
21	5220020082-9	Popcorn Maize Distributor Disc 48F Ø7,14mm(Ø43 X Ø186 X 4,50mm)	1
22	5220020017-9	Seed Distributor Disc Without Hole (Ø43 X Ø186 X 8,00mm)	1
23	5220020077-2	Sunflower Distributor Disc 20F 7 X 16mm(Ø43 X Ø186 X 4,50mm)	1
24	5220020030-6	Sorghum Distributor Disc 17F Ø7,14mm(Ø43 X Ø186 X 4,50mm)	1
25	6020070001-8	Seed Distributor Disc Cego (Ø43 X Ø186 X 4,50mm)	1
26	5220020075-6	Cotton Distributor Disc 30F 5,5 X 11mm(Ø43 X Ø186 X 7,90mm)	1
27	6020070005-0	Peanut Distributor Disc 19F Ø20mm (Ø43 X Ø193 X 6,00mm)	1
28	6020130206-7	Trigger Cleaner	1
29	6020070087-5	Soy/Sorgum Distributor Disc 90H Ø5mm (Ø43 X Ø186 X 3,00mm)	1
30	6020010073-8	Plastic Ring Ø185 X 5mm P/ Disco De Sorgo	1
31	6020070102-2	Small Bean Distributor Disc 64H 8,5 X 13mm (Ø43 X Ø186 X 5,50mm)	1
31	6020070103-0	Sunflower Distribitor Disc 72H 7,5 X 12,5mm (Ø43 X Ø186 X 5,50mm)	1
32	6020070140-5	Disc Ø128 X Ø185 X 2,50mm	1
33	5220020037-3	Complete Sorghum Distributor Disc 90F Ø5mm(Ø43 X Ø186 X 3,00mm)	1
34	5220010002-6	Dry Bean Distributor Disc 64F 8,5 X 13mm(Ø43 X Ø186 X 5,50mm) With Ring	1
34	5220010001-8	Small Bean Distributor Disc 72F 7,5 X 12,5mm(Ø43 X Ø186 X 5,50mm) With Ring	1

* Item 28 - See page 20 and/or 21

• Distributor Discs - Universal System

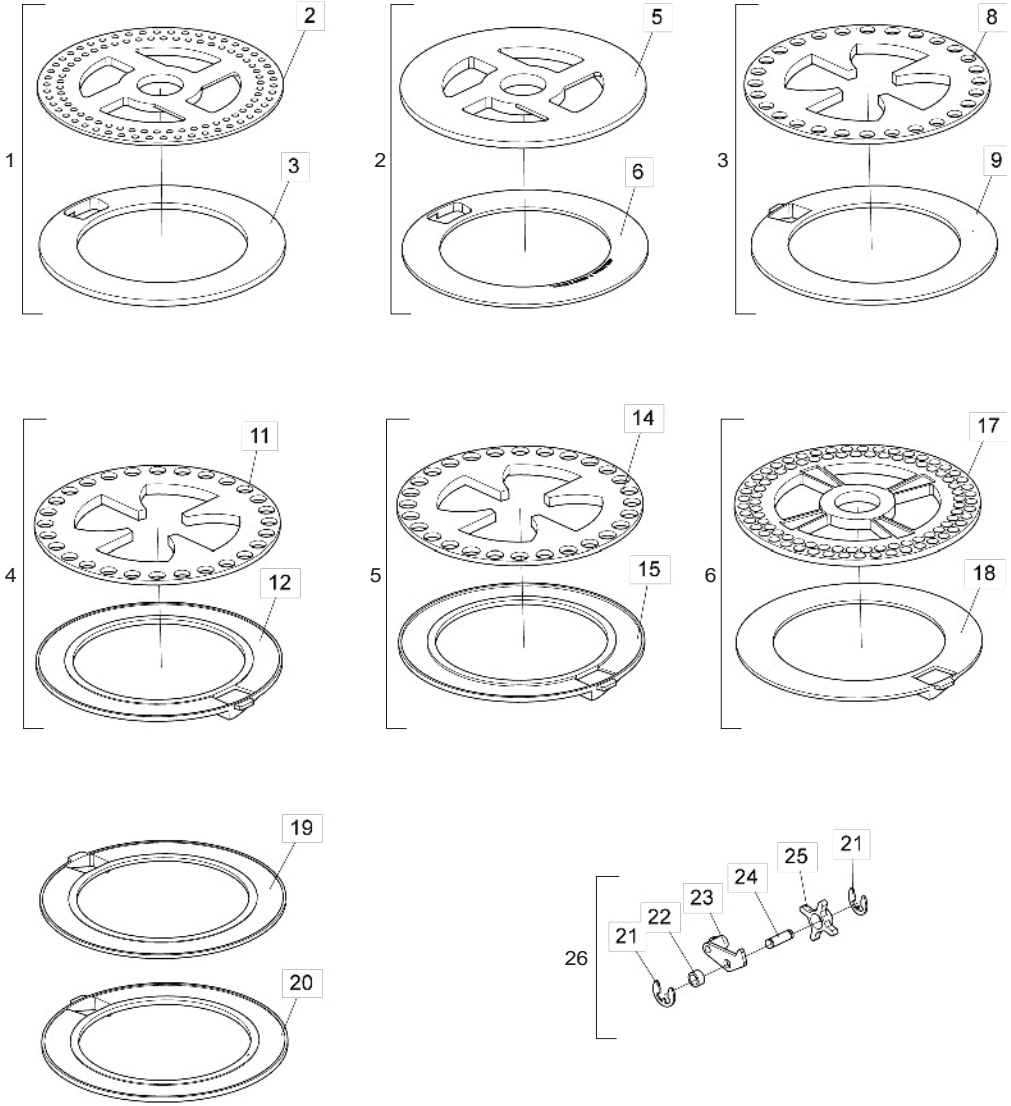

Item	Code	Product description	All
1	5220010104-9	Sorghum Distributor Disc 100F Ø5mm(Ø35,5 X Ø189 X 3,00mm) With Ring 5,50mm	1
2	6020070136-7	Sorgum Distributor Disc 100H Ø5mm (Ø35,5 X Ø189 X 3,00mm) (Universal)	1
3	6020070109-0	Ring Ø131,5 X Ø189 X 5,50mm With Lock For Sorgum	1
4	5220010131-6	Distribuitor Disc Without Hole (Ø35,5 X Ø189 X 5,50mm) With Ring Of 3,00mm(Universal)	1
5	6020070123-5	Distributor Disc Cego (Ø35,5 X Ø189 X 5,50mm) (Universal)	1
6	6020070108-1	Ring Ø131,5 X Ø189 X 3,00mm S/Rebajo	1
7	5220010137-5	Maize Distributor Disc 28F Ø11,5mm(Ø189 X 4,00mm)With Ring 4,00mm	1
8	6020071798-0	Maize Distribitor Disc 28H Ø11,5mm (Ø189 X 4,00mm) Rampflow (Light Green)	1
9	6020015815-9	Maize Ring Mod U 4mm Plain (Yellow) (1020016)	1
10	5220010138-3	Maize Distributor Disc 28F Ø12,5mm(Ø189 X 4,00mm)With Ring 4,00mm	1
11	6020071799-9	Maize Distribitor Disc 28H Ø12,5mm (Ø189 X 4,00mm) Rampflow (Light Blue)	1
12	6020015809-4	Maize Ring Mod U 4mm C/Rebajo 1mm(Green)(1020017)	1
13	5220010139-1	Maize Distributor Disc 28F Ø13,5mm(Ø189 X 4,00mm)With Ring 4,00mm	1
14	6020071800-6	Maize Distribitor Disc 28H Ø13,5mm (Ø189 X 4,00mm) Rampflow (Beige)	1
15	6020015814-0	Maize Ring Mod U 4mm C/Rebajo 2,5mm(Blue)(1020019)	1
16	5220010141-3	Soy Deam Distributor Disc 90F Ø9mm(Ø35,10 X Ø189 X 5,50mm)With Ring 3,00mm	1
17	6020071802-2	Soy Deam Distributor Disc 90H Ø9mm (Ø35,10 X Ø189 X 5,50mm) Rampflow (Lilac)	1
18	6020015811-6	Soy Ring Mod U 3mm Liso (Lilac) (1020020)	1
19	6020015812-4	Soy Ring Mod U 3mm C/Rebajo 0,8mm (Purple) (1020021)	1
20	6020015813-2	Soy Ring Mod U 4mm C/Rebajo 1mm (Light Orange) (1020024)	1
21	6020010246-3	Retaining Ring Rs-05	2
22	6020030720-0	Bushing Ø8,30 X Ø11,50 X 6mm	1
23	6020130205-9	Batcher Trigger	1
24	6020310526-9	Plastic Pin Ø7 x 18.5 x 23.5	1
25	6020350876-2	Batcher Rossete With Hole Ø8,3mm	1
26	6020350930-0	Complete Rossete	1

• Distributor Discs - Titanium System - Optional

Imagem ilustrativa

Code	Product description	All
6020058165-5	Titanium Disc/Rings Kit For Beam (1060001)	1
6020058166-3	Titanium Disc/Rings Kit For Beam Carioquinha 56 Holes (1060022)	1
6020056429-7	Titanium Disc/Rings Kit For Sorgum 90 Holes (1060004)	1
6020056427-0	Titanium Kit For Cotton (1060006)	1
6020015876-0	Cotton Ring Titanium Mod U 3mm C/Rebajo 1,3mm(Blue)(1020031)	1
6020015877-9	Cotton Ring Titanium Mod U 3mm Plain (Green)(1020032)	1
6020056428-9	Titanium Kit For Canola (1060016)	1
6020015878-7	Canola Ring Titanium Mod U 7mm Plain (Red)(1020042)	1
6020015875-2	Maize Ring Titanium Mod U 4mm C/Rebajo 1,6mm(Gray)(1020018)	1
6020015866-3	Titanium Ring Mod U 5,5mm Plan(Write)(1020036)	1
6020015879-5	Sorgum Ring Titanium Mod U 6,5mm Plain (White) (1020035)	1
6020071998-3	Soy Distributor Disc 135H Ø7,3mm Rampflow (Yellow) (1010106)Titanium	1
6020071999-1	Soy Distributor Disc 135H Ø8,0mm Rampflow (Orange) (1010107)Titanium	1
6020072000-0	Soy Distributor Disc 135H Ø9,0mm Rampflow (Lilac) (1010108)Titanium	1
6020015886-8	Soy Ring Titanium 135F 3,0mm (Lilac) (1020053)	1
6020015887-6	Soy Ring Titanium 135F 3,0mm/0,8mm (Purple) (1020054)	1
6020015884-1	Soy Ring Titanium 135F 4,0mm (Yellow) (1020055)	1
6020015885-0	Soy Ring Titanium 135F 4,0mm (Orange) (1020057)	1
6020015888-4	Soy Ring Titanium 135F 4,0mm/1,0mm (Light Orange)(1020056)	1

• Gears

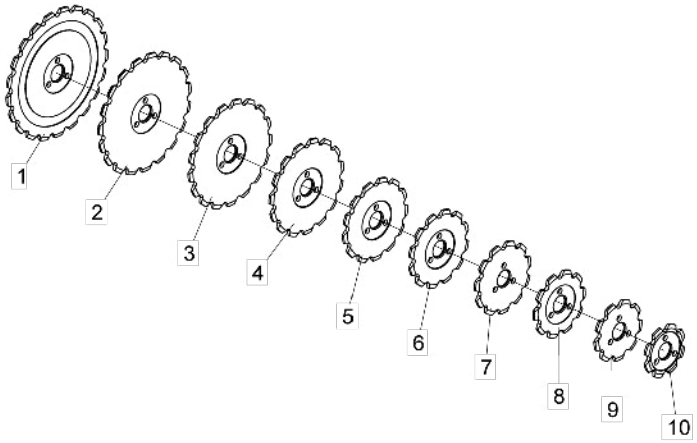

Item	Code	Product description	All
1	5256030021-2	Gear 21 Teeth	1
2	5256030019-0	Gear 19 Teeth	1
3	5256030018-2	Sprocket 17 Teeth	1
4	5256030013-1	Gear 15 Teeth	1
5	5256030010-7	Gear 13 Teeth	1
6	5256030012-3	Sprocket 12 Teeth	1
7	5256030030-1	Gear 11 Teeth	1
8	5256030003-4	Gear 10 Teeth	1
9	5256030029-8	Gear 9 Teeth	1
10	5256030006-9	Sprocket 8 Teeth	1

• Furrower Without Support For Fertilizer Conductor - Optional

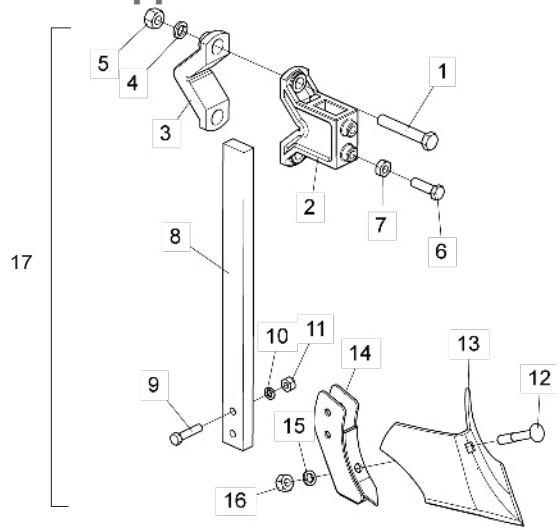

Item	Code	Product description	All
1	6020311101-3	Hexagonal Head Bolt 3/4" X 4.1/2" 10F Unc1A Gr5 Rp	2
2	5530014631-6	Fixation Support Of Forrower	1
3	6010600770-8	Clamp	1
4	6020010414-8	Pressure Washer 3/4" Media Industry	2
5	6020310770-9	Hexagonal Nut 3/4" 10F Unc Gr5 Ch.1.7/32" Height 18,50mm	2
6	6020311043-2	Hexagonal Head Bolt 5/8" X 2.1/4" 11F Unc1A Gr5 Rt	2
7	6020310738-5	Hexagonal Nut 5/8" 11F Unc Gr5 Ch.1.1/16" Height 11,00mm	2
8	5040120009-3	Bar Of Shank	1
9	6020312060-8	Hexagonal Head Bolt 1/2" X 2.1/4" 12F W Gr5 Rp	2
10	6020010410-5	Pressure Washer 1/2" Media Industry	2
11	6020310754-7	Hexagonal Nut 1/2" 12F W Gr5 Ch.7/8" Height 12,00mm	2
12	6020311182-0	French Head Bolt 5/8" X 4" 11F Unc Gr5 Rp-38,1mm	1
13	4708140005-5	Furrow Sweep 9" X 5,00mm	1
14	5530014632-4	Support Of Forrower	1
15	6020010412-1	Pressure Washer 5/8" Media Industry	1
16	6020310760-1	Hexagonal Nut 5/8" 11F Unc Gr5 Ch.1.1/16" Height 15,00mm	1
17	5532010188-2	Complete Furrower	1

• Furrower With Support For Fertilizer Conductor - Optional

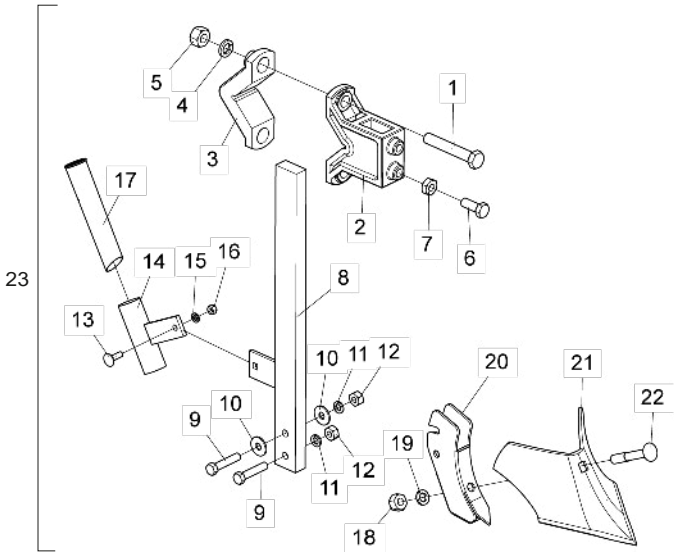

Item	Code	Product description	All
1	6020311101-3	Hexagonal Head Bolt 3/4" X 4.1/2" 10F Unc1A Gr5 Rp	2
2	5530014631-6	Fixation Support Of Forrower	1
3	6010600770-8	Clamp	1
4	6020010414-8	Pressure Washer 3/4" Media Industry	2
5	6020310770-9	Hexagonal Nut 3/4" 10F Unc Gr5 Ch.1.7/32" Height 18,50mm	2
6	6020311069-6	Hexagonal Head Bolt 5/8" X 1.3/4" 11F Unc1A Gr5 Rt Wth Point	2
7	6020310738-5	Hexagonal Nut 5/8" 11F Unc Gr5 Ch.1.1/16" Height 11,00mm	2
8	5326090002-8	Furrower Rod	1
9	6020312300-3	Hexagonal Head Bolt 1/2" X 2.1/2" 12F W Gr5 Rp	2
10	5024010068-9	Smooth Washer Ø13,3 X Ø35,5 X 3,00mm	2
11	6020010410-5	Pressure Washer 1/2" Media Industry	2
12	6020310754-7	Hexagonal Nut 1/2" 12F W Gr5 Ch.7/8" Height 12,00mm	2
13	6020311090-4	French Head Bolt 3/8" X 1.1/4" 16F Unc1A Gr2 Rp	1
14	5530180016-8	Support From the spout	1
15	6020010406-7	Pressure Washer 3/8" Media Industry	1
16	6020310746-6	Hexagonal Nut 3/8" 16F Unc Gr5 Ch.9/16" Height 8,50mm	1
17	5052060023-7	Fertilizer Spout	1
18	6020310760-1	Hexagonal Nut 5/8" 11F Unc Gr5 Ch.1.1/16" Height 15,00mm	1
19	6020010412-1	Pressure Washer 5/8" Media Industry	1
20	5530080009-1	Support Of Forrower	1
21	4708140005-5	Furrow Sweep 9" X 5,00mm	1
22	6020311182-0	French Head Bolt 5/8" X 4" 11F Unc Gr5 Rp-38,1mm	1
23	5532020003-1	Complete Furrower	1

• Conversion System for Peanut Planting - Optional

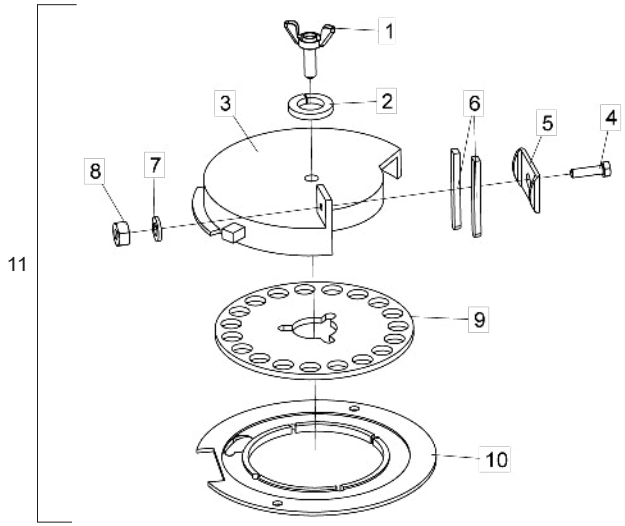

Item	Code	Product description	All
1	5420010136-0	Butterfly Screw M12 X 1.75	1
2	6020010410-5	Pressure Washer 1/2" Media Industry	1
3	5484060002-8	Internal Regulator For Peanut	1
4	6020310019-4	Hexagonal Head Bolt 1/4" X 1" 20F Unc1A Gr2 Rt	1
5	5460040003-0	Clamp	1
6	5212010001-7	Seed Drop Plastiprene	2
7	6020010402-4	Pressure Washer 1/4" Media Industry	1
8	6020310742-3	Hexagonal Nut 1/4" 20F Unc Gr5 Ch.7/16" Height 5,50mm	1
9	6020070005-0	Peanut Distributor Disc 19F Ø20mm (Ø43 X Ø193 X 6,00mm)	1
10	5220010045-0	Metallic Dual Side Disc For Peanut Seeds (Ø132 X Ø233,2 X 7,50mm)	1
11	55280106916	Conversion System For Peanut Planting With Disc 19F Ø20mm	1

• Stickers until 04/2023

Item	Code	Product description	All
1	6020070432-3	Sticker Plb-Directa Baldan(100 X 200mm)	1
2	6020071325-0	Sticker Plb-Directa Baldan(210 X 145mm)	1

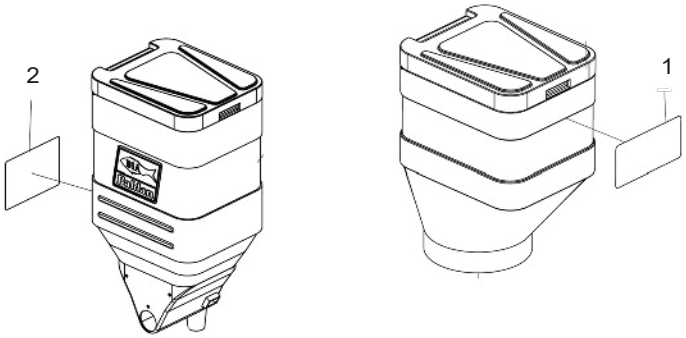

Item 1

Item 2

• Stickers from 05/2023

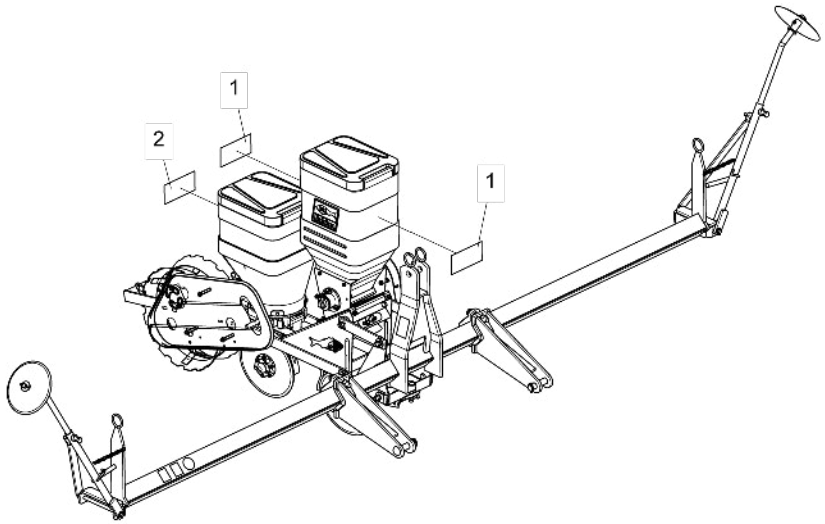

Item	Code	Product description	All
1	6020079427-6	Sticker Plb Directa (100 X 200mm)	2
2	6020079428-4	Sticker Baldan (100 X 200mm)	1
1	6020095955-0	Emblem 70 X 132,6mm	1

Item 1

Item 2

Item 3

BALDAN

Avenida Baldan, 1500
Nova Matão
15.993-900
Matão/SP - Brasil
sac@baldan.com.br
export@baldan.com.br

+55 16 3221 6500
baldan.com.br