Parts Catalog

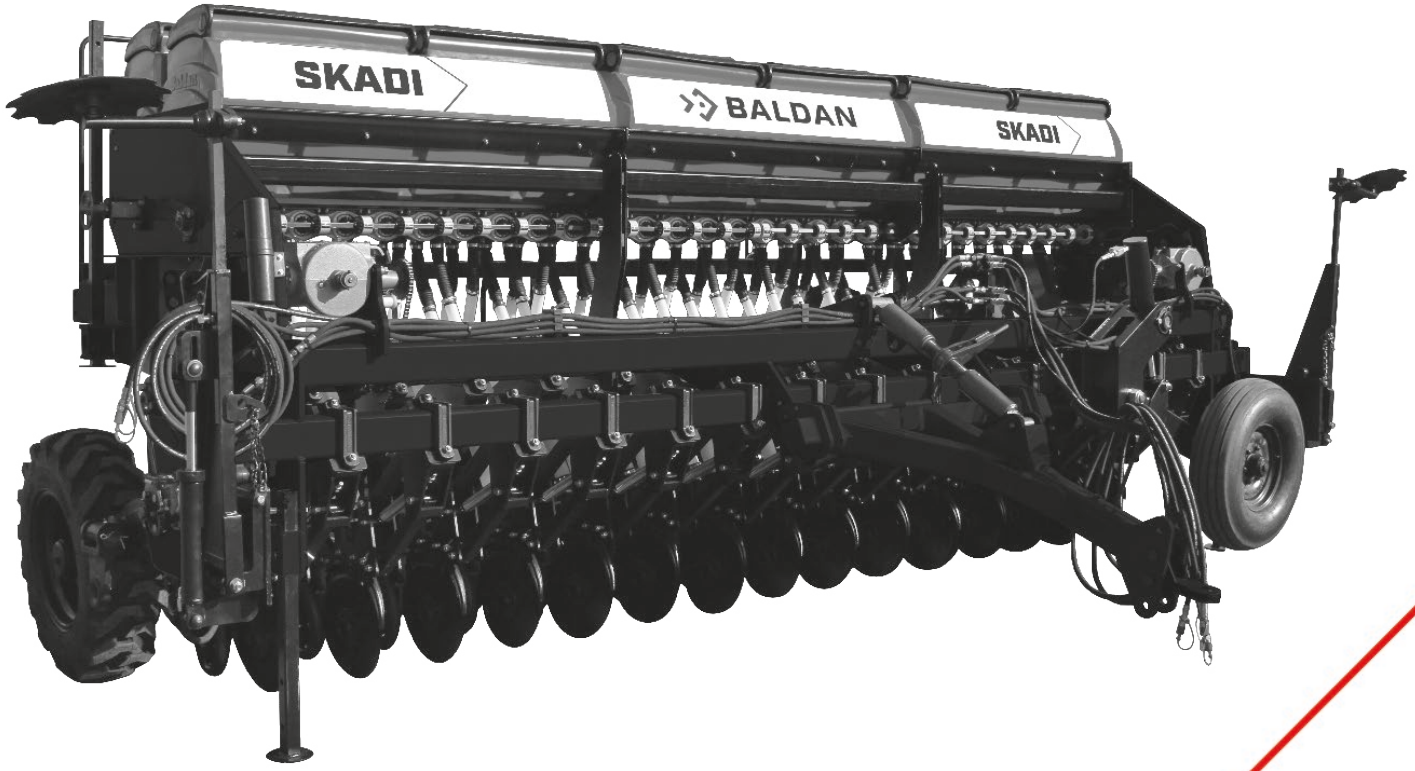

SKADI

Baldan Pantographic Winter Seeder

BALDAN

Índice

Main Frame 4
Table Main Frame 5
Transmission System 6
Table Transmission System 7-8
Complete Lifting Support 5000/6000 9
Complete Lifting Support 7000 10
Complete Right/Left Wheel 11
Main Frame Cylinder 11
Speed Box 12
Complete Hitch Drawbar 13
Seed/Fertilizer Hopper (Fertisystem) Complete 14
Complete Seed/Fertilizer Hopper (Fertisystem) W/Pasture Seed Hopper 5000/6000 14
Seed/Fertilizer Hopper 15
Table Seed/Fertilizer Hopper 16-17
Complete Pasture Seed Hopper 5000/6000 18
Table Complete Pasture Seed Hopper 5000/6000 19
Hydraulic System Without Row Marker5000/6000 20
Hydraulic System Without Row Marker For Lateral Transport 5000/6000 21
Hydraulic System With Row Marker 5000/6000 22
Table Hydraulic System With Row Marker 5000/6000 23
Hydraulic System With Row Marker For Lateral Transport 24
Table Hydraulic System With Row Marker For Lateral Transport 25
Row Marker Cylinder 26
ETD Electronic Table Support- Optional 26
Row W/Fertilizer and Seed Double Disc W/Depth Regulator (Large Wheel) 27
Table Row W/Fertilizer and Seed Double Disc W/Depth Regulator (Large Wheel) 28
Fertilizer and Seed Double Disc Row 29
Lateral Transport - Optional 30
Table Lateral Transport - Optional 31
Hub - Skadi 5000/6000 32
Wheel Shaft - Skadi 7000 32
Lateral Transport Cylinder 33
Stickers 34-37

• Main Frame

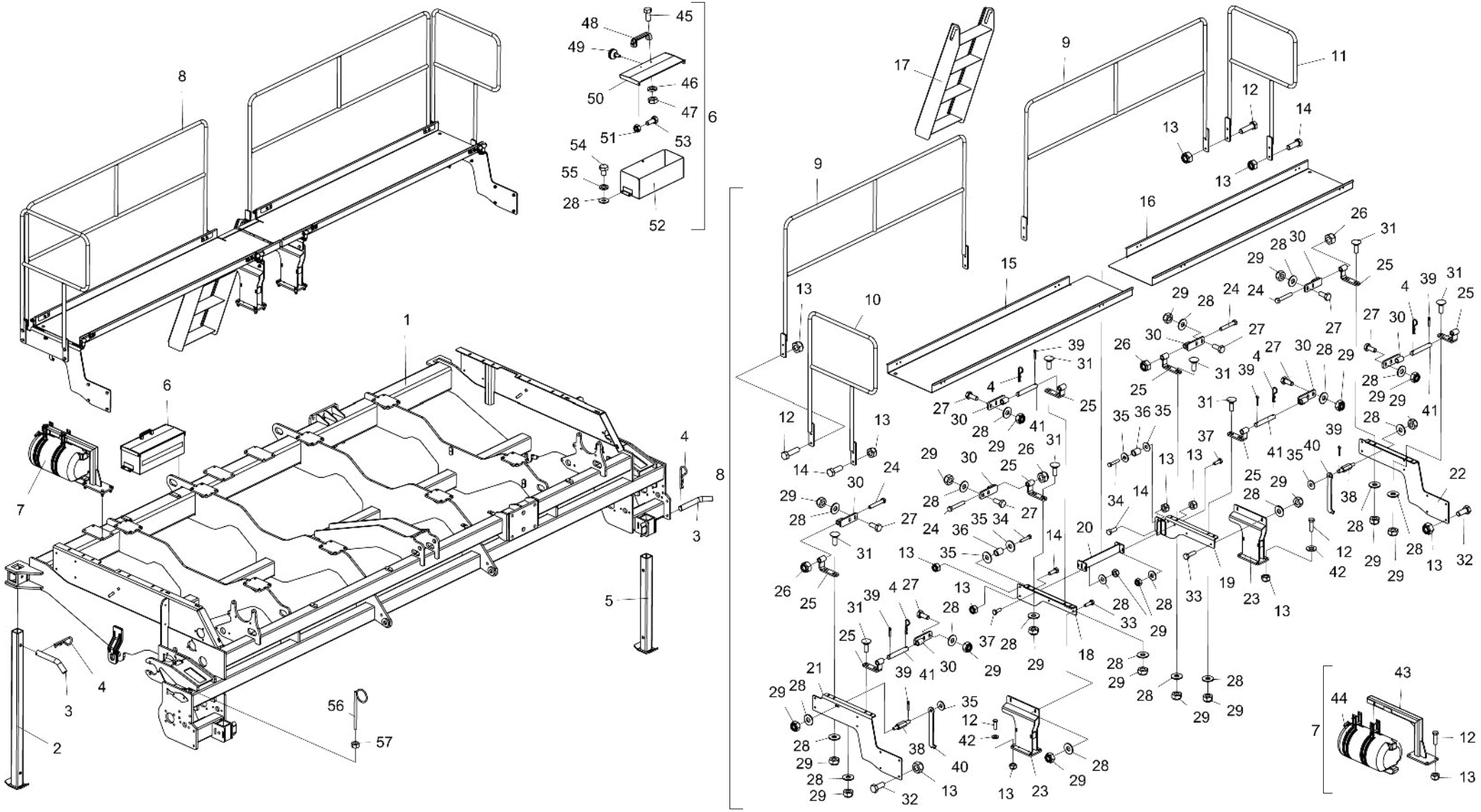
1
2
3
4
5
6
7
8
9
10
11
12
13
14
15
16
17
18
19
20
21
22
23
24
25
26
27
28
29
30
31
32
33
34
35
36
37
38
39
40
41
42
43
44
45
46
47
48
49
50
51
52
53
54
55
56
57

• Table Main Frame

Item	Code	Product description	All	5000	6000	7000
1	5404011046-4	Main Frame SKADI 5000		1		
1	5404011043-0	Main Frame SKADI 6000			1	
1	5404011071-5	Main Frame SKADI 7000				1
2	5530017853-6	Support 1354mm	2			
3	5432020032-9	Pin "L" Ø3/4" X 94mm	4			
4	6020390294-0	Lock Nma - Type "R" Ø3,5 X 67mm(Special)	8			
5	5530017852-8	Support 822mm	2			
6	5092010540-5	Complete Tools Box	1			
7	5208013059-7	Water Tank	1			
8	5440011037-1	Complete Platform SKADI 5000		1		
8	5440011036-3	Complete Platform SKADI 6000			1	
8	5440011043-6	Complete Platform SKADI 7000				1
9	5196013304-1	Platform Handrail (2036mm)		2		
9	5196013312-2	Platform Handrail (2345mm)			2	
9	5196013330-0	Platform Handrail (2345mm)				2
10	5196013319-0	Right Lateral Handrail	1			
11	5196013320-3	Left Lateral Handrail	1			
12	6020310441-6	Hexagonal Head Bolt M12 X 1,75 X 45mm Cl8.8 Rt	16			
13	6020310847-0	Self-Locking Nut With Nylon M12 X 1 ,75 Ma Cl8 Ch.19mm H.12,00mm	32			
14	6020310439-4	Hexagonal Head Bolt M12 X 1,75 X 35mm Cl8.8 Rt	6			
15	5136017338-4	Right Plate of Platform (2250mm)		1		
15	5136018519-6	Right Plate of Platform (2560mm)			1	
15	5136019629-5	Right Plate of Platform (2900mm)				1
16	5136017339-2	Left Plate of Platform (2250mm)		1		
16	5136018520-0	Left Plate of Platform (2560mm)			1	
16	5136019630-9	Left Plate of Platform (2900mm)				1
17	5259010050-1	Stair 4 Degrees	1			
18	5530016992-8	Left Central Support of Platform	1			
19	5530016994-4	Right Central Support of Platform	1			
20	5530016996-0	Fixation Support of Platform	1			
21	5530016998-7	Left Support of Platform	1			
22	5530016997-9	Right Support of Platform	1			
23	5530017801-3	Rear Support of Platform	2			
24	6020310150-6	Hexagonal Head Bolt M16 X 2,00 X 100mm Cl8.8 Rp	4			
25	5530016846-8	Large Support of Platform	8			
26	6020317443-0	Self-Locking Nut With Nylon M16 X 2,00 Ma Cl8 Ch.24mm H.16,00mm	4			
27	6020310452-1	Hexagonal Head Bolt M10 X 1,50 X 25mm Cl8.8 Rt	16			
28	5024010075-1	Smooth Washer Ø10,3 X Ø25 X 2,00mm	46			
29	6020317435-0	Self-Locking Nut With Nylon M10 X 1,50 Ma Cl8 Ch.17mm H.10,00mm	42			
30	5530016847-6	Small Support of Platform	8			
31	6020317544-5	French Head Bolt M10 X 1,50 X 30mm Cl8.8 Rt	16			
32	6020310211-1	Hexagonal Head Bolt M12 X 1,75 X 30mm Cl8.8 Rt	8			
33	6020310437-8	Hexagonal Head Bolt M10 X 1,50 X 35mm Cl8.8 Rt	4			
34	6020317437-6	Hexagonal Head Bolt M12 X 1,75 X 65mm Cl8.8 Rp	2			
35	5024010068-9	Smooth Washer Ø13,3 X Ø35,5 X 3,00mm	6			
36	5080020100-1	Bushing Of Ø14 X Ø17,94 X 24mm	2			
37	6020317475-9	Hexagonal Head Bolt M10 X 1,50 X 30mm Cl8.8 Rt	4			

Item	Code	Product description	All	5000	6000	7000
38	5232012176-0	Hexagonal Shaft 3/4" X 89mm	2			
39	6020050104-0	Cotterpin 3/16" X 1"	6			
40	5136017308-2	Handle Plate	2			
41	5432010748-5	Pin Ø5/8" X 105mm	4			
42	5024010162-6	Smooth Washer Ø13 X Ø26 X 2,00mm	8			
43	5530017851-0	Water Tank Support	1			
44	6020055928-5	Corote Resfriar 26 Liters (Cod.700147)	1			
45	6020310882-9	Hexagonal Head Bolt Inox 5/16" X 3/4" 18F Unc2A Rt	2			
46	6020010434-2	Pressure Washer Inox 5/16" Media	2			
47	6020310767-9	Brass Hexagonal Nut 5/16" 18F Unc Ch.1/2" H.6,50mm	2			
48	6020010922-0	Nylon Belt Pmc 594 - 132 X 32 mm	1			
49	6020030001-0	Male Aperto Button "Thermoplastic" (R.1/4" Unc X 15mm)	1			
50	5538010572-0	Tolls Box Cover	1			
51	6020317442-2	Self-Locking Nut With Nylon Low M6 X 1,00 Ma Cl8 Ch.10mm H.6,00mm	2			
52	5092010541-3	Tools Box	1			
53	6020310291-0	Hexagonal Head Bolt M6 X 1,00 X 15mm Cl8.8 Rt	2			
54	6020310299-5	Hexagonal Head Bolt M10 X 1,50 X 15mm Cl8.8 Rt	4			
55	6020010394-0	Pressure Washer M10 Media	4			
56	5530017804-8	Hoses Support	1			
57	6020310760-1	Hexagonal Nut 5/8" 11F Unc Gr5 Ch.1.1/16" Height 15,00mm	1			

• Transmission System

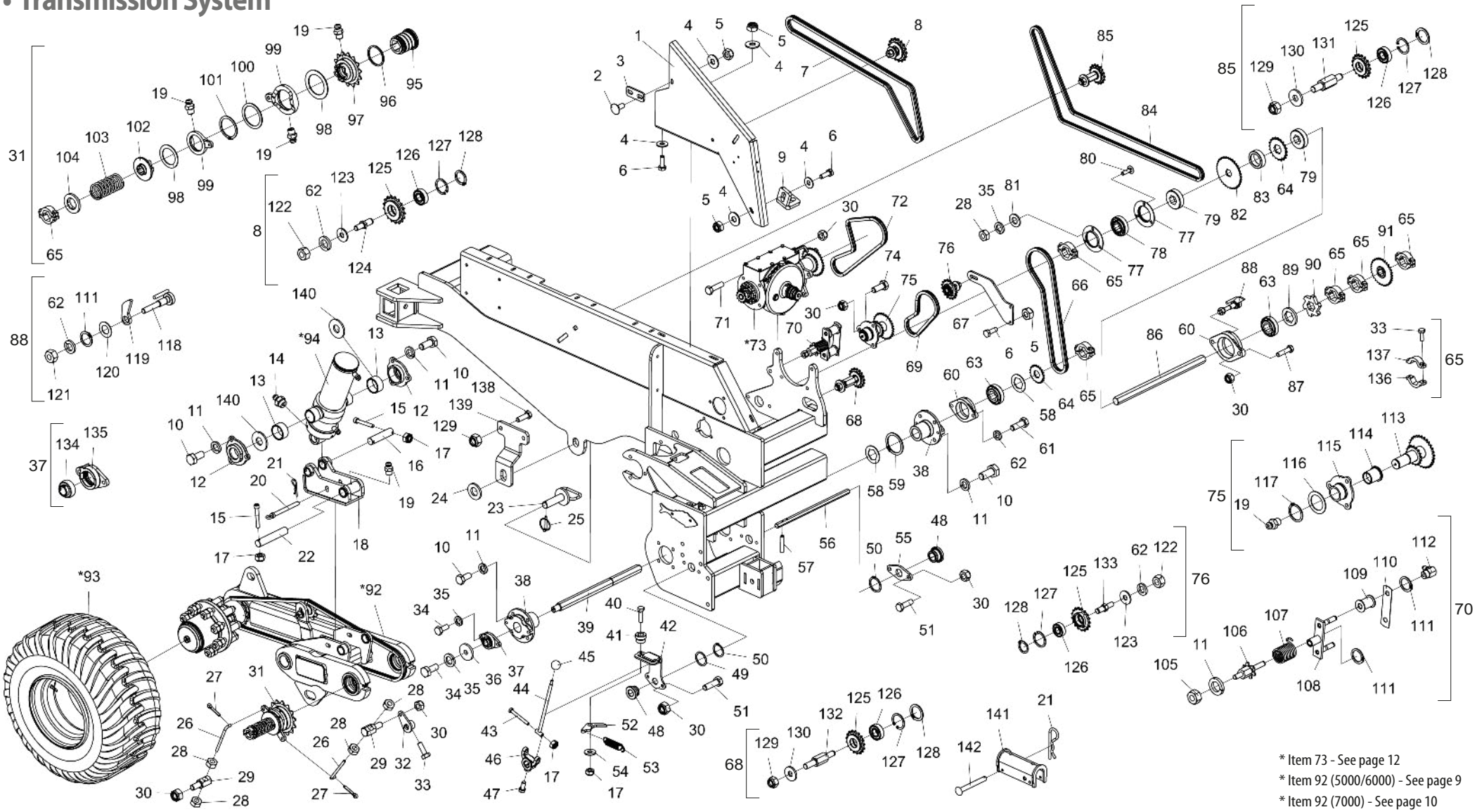

* Item 73 - See page 12
* Item 92 (5000/6000) - See page 9
* Item 92 (7000) - See page 10
* Items 93 and 94 - See page 11

• Table Transmission System

Item	Code	Product description	All	5000	6000	7000
1	5464010661-4	Right Lateral Protection of Main Frame	1			
1	5464010662-2	Left Lateral Protection of Main Frame	1			
2	6020317445-7	French Head Bolt M10 X 1,50 X 25mm Cl8.8 Rt	4			
3	5136015703-6	Hopper Fixation Plate	2			
4	5024010075-1	Smooth Washer Ø10,3 X Ø25 X 2,00mm	20			
5	6020317435-0	Self-Locking Nut With Nylon M10 X 1,50 Ma Cl8 Ch.17mm H.10,00mm	16			
6	6020317475-9	Hexagonal Head Bolt M10 X 1,50 X 30mm Cl8.8 Rt	12			
7	6020055206-0	Chain (Asa 40) 153 Links + Amendment	2			
8	5268010807-2	Complete Stretcher With Gear 17 Teeth (Asa 40) R.1/2"	4			
9	5136013871-6	Protection Fixation Plate	2			
10	6020310925-6	Hexagonal Head Bolt M16 X 1,50 X 35mm Cl8.8 Rt	28			
11	6020010412-1	Pressure Washer 5/8" Media Industry	30			
12	5284010041-3	Flange Of Piston Support	4			
13	5080010389-1	Flange Bronze Bushing	4			
14	6020130108-7	Grease Fitting 1/8"	2			
15	6020310903-5	Allen Bolt M8 X 1,25 X 55mm Cl12.9 Rp	6			
16	5432010177-0	Flat Pin Ø1.1/4" X 119mm	2			
17	6020317449-0	Self-Locking Nut With Nylon Low M8 X 1,25 Ma Cl8 Ch.13mm H.8,00mm	12			
18	5530011519-4	Fixation Support	2			
19	6020130100-1	Grease Fitting 1/4"	14			
20	5432010174-6	Lock Pin Of Ø7/8" X 160mm	2			
21	6020390308-4	Lock Nma - Type "R" Ø4,5 X 80mm	4			
22	5432010178-9	Flat Pin Ø1.1/4" X 177,5mm	2			
23	5432010489-3	Pin Ø1.1/4" X 102mm	2			
24	5024010249-5	Smooth Washer Ø32 X Ø60 X 6,30mm(Galvanised)	2			
25	6020390293-2	Lock Ø5,75 X 40mm	2			
26	5484010170-6	Disarm Regulator	4			
27	6020050104-0	Cotterpin 3/16" X 1"	4			
28	6020310822-5	Hexagonal Nut M10 X 1,50 Ma Cl8 Ch.17mm H.8,00mm	22			
29	5432010700-0	Hexagonal Pin 3/4" X 58mm	4			
30	6020310847-0	Self-Locking Nut With Nylon M12 X 1 ,75 Ma Cl8 Ch.19mm H.12,00mm	28			
31	5132010027-9	Complete Right Ratchet	1			
31	5132010021-0	Complete Ratchet	1			
32	5558010492-3	Complete Lock Of Ratchet	2			
33	6020310016-0	Hexagonal Head Bolt 1/4" X 3/4" 20F Unc1A Gr5 Rt	26			
34	6020310452-1	Hexagonal Head Bolt M10 X 1,50 X 25mm Cl8.8 Rt	6			
35	6020010394-0	Pressure Washer M10 Media	12			
36	5024010669-5	Smooth Washer Ø10,5 X Ø38 X 4,75mm	2			
37	5368010422-7	Sleeve Bearing With Self Compensation Gy1100 Krrb De Ø1"	2			
38	5284010163-0	Flange Of Wheel Support	4			
39	5232012390-9	Hexagonal Shaft 1.1/4"X 550mm	2			
40	6020317477-5	Hexagonal Head Bolt M8 X 1,25 X 30mm Cl8.8 Rt	4			
41	5080011281-5	Bushing Of Ø8 X Ø5/8" X 12mm	4			
42	5136014698-0	Lock Plate Of Right Handle	1			
42	5136014699-9	Lock Plate Of Left Handle	1			
43	6020310568-4	Hexagonal Head Bolt M8 X 1,25 X 70mm Cl8.8 Rp	2			

Item	Code	Product description	All	5000	6000	7000
44	5008010253-1	Complete Handle	2			
45	6020090450-0	Sphere 1508-3/8"	2			
46	5530015211-1	Articulation Support W/Hexagonal Hole For Shaft 3/4"	2			
47	6020312020-9	Hexagonal Head Bolt 5/16" X 3/4" 18F Unc1A Gr5 Rt	2			
48	5080010599-1	Bushing Of Ø40 X 22mm W/Hexagonal Hole For Shaft 3/4"	4			
49	5024010333-5	Smooth Washer Ø30,5 X Ø1.1/2" X 1,00mm	2			
50	6020010263-3	Retaining Oring	4			
51	6020310152-2	Hexagonal Head Bolt M12 X 1,75 X 40mm Cl8.8 Rp	8			
52	5558010409-5	Lock Of Finishing Handle	4			
53	6020250263-9	Helical Spring Ø11,8 X Ø15 X 53mm	2			
54	5024010073-5	Smooth Washer Ø8,5 X Ø20 X 2,00mm	4			
55	5136014748-0	Lock Plate Of Right Handle	2			
56	5232012071-3	Hexagonal Shaft 3/4" X 460mm	2			
57	6020310488-2	Heavy Elastic Pin Ø6 X 32mm	4			
58	5024010490-0	Washer With Hexagonal Hole Ø32mm	4			
59	6020010264-1	Retaining Oring	2			
60	6020250419-4	Cast Iron Bearing Type Flange Cjt-07 With Fitting Grease 1/8" 28F (Frm)	4			
61	6020310439-4	Hexagonal Head Bolt M12 X 1,75 X 35mm Cl8.8 Rt	4			
62	6020010410-5	Pressure Washer 1/2" Media Industry	12			
63	6020250116-0	Bearing Assy F-110949	4			
64	5256010103-1	Gear 20 Teeth	4			
65	5460010007-9	Complete Shaft Of Clamp	12			
66	6020050784-6	Chain (Asa 40) 101 Links + Amendment	2			
67	5136018886-1	Stretcher Fixation Plate	2			
68	5268010842-0	Stretcher W/Gear 17 Dents (Asa 40) R.M16 X 2mm Complete	2			
69	6020050813-3	Chain (Asa 40) 51 Links + Amendment		2	2	
69	6020050812-5	Chain (Asa 40) 52 Links + Reduction				2
70	5268010222-8	Complete Right Stretcher	1			
70	5268010221-0	Complete Left Stretcher	1			
71	6020310441-6	Hexagonal Head Bolt M12 X 1,75 X 45mm Cl8.8 Rt	8			
72	6020050076-0	Chain (Asa 40) 84 Links + Reduction	2			
*73	5092010609-6	Right Speed Box (Fertilizer)	1			
*73	5092010610-0	Left Speed Box (Fertilizer)	1			
74	6020310211-1	Hexagonal Head Bolt M12 X 1,75 X 30mm Cl8.8 Rt	6			
75	5204010525-5	Transmission Hub	2			
76	5268010820-0	Small Stretcher With Complete Gear 17 Teeth (Asa 40) Thread 1/2"	2			
77	6020250496-8	Steel Plate Bearing 03 72Msb	4			
78	6020350898-3	Bearing (Ina 1º Line) Gsk104-207-Krr-B-As2/V-Ah01	2			
79	6020030091-5	Bushing With Hexagonal Hole 1.1/4" Of 070 X 20mm	4			
80	6020317461-9	French Head Bolt M10 X 1,50 X 35mm Cl8.8 Rt		6	6	
80	6020311206-0	French Head Bolt M10 X 1,50 X 40mm Cl8.8 Rt				6
81	5024010466-8	Smooth Washer Ø10,3 X Ø20 X 2,00mm	6			
82	5256010470-7	Gear 36 Teeth	2			
83	5080011714-0	Bushing Of Ø38 X Ø54 X 16mm	2			
84	6020059230-4	Chain ASA 40 235 Links + Amendment	2			
85	5268010847-1	Stretcher W/Gear 17 Teeths (ASA 40)	4			

BALDAN

• Table Transmission System

Item	Code	Product description	All	5000	6000	7000
86	5232012072-1	Hexagonal Shaft 1.1/4" X 460mm	2			
87	6020310184-0	Hexagonal Head Bolt M12 X 1,75 X 50mm Cl8.8 Rp	2			
88	5558010246-7	Right Lock Of Complete Rossette	1			
88	5558010245-9	Left Lock Of Complete Rossette	1			
89	5024010406-4	Hexagonal Smooth Washer 32 X Ø55 X 6,30mm	2			
90	5200010005-6	Rossette	2			
91	5256010056-6	Complete Gear 20/31 Teeth With Hexagonal 1.1/4"	2			
*92	5530016459-4	Complete Right Lifting Support		1	1	
*92	5530016462-4	Left Support Of Complete Lifiting		1	1	
*92	5530018339-4	Complete Articulation Right Support				1
*92	5530018340-8	Complete Articulation Left Support				1
*93	5498010283-4	Mounted Right Wheel 18" X 9" W/Tire 10.5/80-18(10 Lonas) At 603 Bkt		1	1	
*93	5498010284-2	Mounted Left Wheel 18" X 9" W/Tire 10.5/80-18(10 Lonas) At 603 Bkt		1	1	
*93	5498010347-4	Monunted Right Wheel (Tyre 500/60-22.5 16 TR-08)				1
*93	5498010348-2	Monunted Left Wheel (Tyre 500/60-22.5 16 TR-08)				1
*94	6020058527-8	Cylinder Ø2" X Ø4" X 230mm(Course) X 184,5mm(Closed)	2			
95	5080010935-0	Hexagonal Bushing Of 1.1/4"	2			
96	5024010541-9	Smooth Washer Ø55,5 X Ø63,5 X 3,00mm	2			
97	5256010466-9	Gear 14 And 6 Teeth Of Right Ratchet	1			
97	5256010267-4	Gear 14 and 6 Teeth Of Left Ratchet	1			
98	5024010542-7	Smooth Washer Ø77 X Ø108 X 3,00mm	4			
99	5526010034-2	Separator Of Ratchet	4			
100	5024010544-3	Smooth Washer Ø47 X Ø59,2 X 2,00mm	2			
101	6020010272-2	Retaining Ring E-46	2			
102	5256010465-0	Internal Right Gear Of Right Ratchet	1			
102	5256010268-2	Internal Left Gear Of Right Ratchet	1			
103	6020250573-5	Ratchet Spring	2			
104	5024010543-5	Smooth Washer Ø46,2 X Ø60 X 12,50mm	2			
105	6020310760-1	Hexagonal Nut 5/8" 11F Unc Gr5 Ch.1.1/16" Height 15,00mm	2			
106	5232010628-1	Left Shaft Of Stretcher	1			
106	5232010629-0	Right Stretcher Shaft	1			
107	6020250218-3	Torsion Helical Spring Ø38 X Ø46 X 67mm	1			
107	6020250219-1	Torsion Helical Spring Ø38 X Ø46 X 67mm	1			
108	5268010146-9	Spare Chain Stretcher	2			
109	5506010014-3	Roller Of Stretcher	4			
110	5136020627-4	Front Plate Of Stretcher	2			
111	6020010252-8	Retaining Oring	8			
112	6020130112-5	Grease Fitting 1/8"	4			
113	5256010474-0	Gear 29/17 Teeths	2			
114	5080010555-0	Bronze Bushing	2			
115	5204010312-0	Transmission Hub	2			
116	5024010374-2	Smooth Washer Ø36 X Ø52 X 1,50mm(Inox)	2			
117	6020010307-9	Retaining Ring E-36	2			
118	5432010175-4	Lock Pin Of Trigger	2			
119	5558050016-0	Lock Of Rossette	2			
120	5024010059-0	Smooth Washer Ø16,5 X Ø29 X 1,21mm	2			

Item	Code	Product description	All	5000	6000	7000
121	6020310754-7	Hexagonal Nut 1/2" 12F W Gr5 Ch.7/8" Height 12,00mm	2			
122	6020310756-3	Hexagonal Nut 1/2" 12F W Gr5 Ch.3/4" Height 11,00mm	6			
123	5024010068-9	Smooth Washer Ø13,3 X Ø35,5 X 3,00mm	6			
124	5232011562-0	Fixation Shaft Of Stretcher R.1/2"	4			
125	5256010366-2	Complete Gear 17 Teeth(Asa 40)	12			
126	6020350015-0	Bearing 6202 2Rs Ddu	12			
127	6020010284-6	Retaining Ring I-35	12			
128	6020010250-1	Retaining Oring	12			
129	6020317443-0	Self-Locking Nut With Nylon M16 X 2,00 Ma Cl8 Ch.24mm H.16,00mm	10			
130	5024010298-3	Smooth Washer Ø17 X Ø44 X 4,75mm	6			
131	5232012104-3	Stretcher Shaft	4			
132	5232012070-5	Stretcher Shaft	2			
133	5232011614-7	Small Shaft Of Stretcher Fication (Thread 1/2")	2			
134	6020350081-8	Bearing Gy-1100 Krrb	2			
135	5368010499-5	Fixation Bearing	2			
136	5460010004-4	Shaft Clamp Hexagonal 1.1/4" Hole With Thread	12			
137	5460010003-6	Shaft Clamp Hexagonal 1.1/4" With Hole Passante	12			
138	6020311210-9	Hexagonal Head Bolt M16 X 2,00 X 50mm Cl8.8 Rt	4			
139	5530018048-4	Wheel Lock Support	2			
140	5024010827-2	Smooth Washer Ø45,6 X Ø59,5 X 3,00mm				4
141	55580104600-5	Piston Lock 223mm For Rod Ø2"	1			
142	6020310462-9	French Head Pin Ø9,8 X 80mm	2			

• Complete Lifting Support 5000/6000

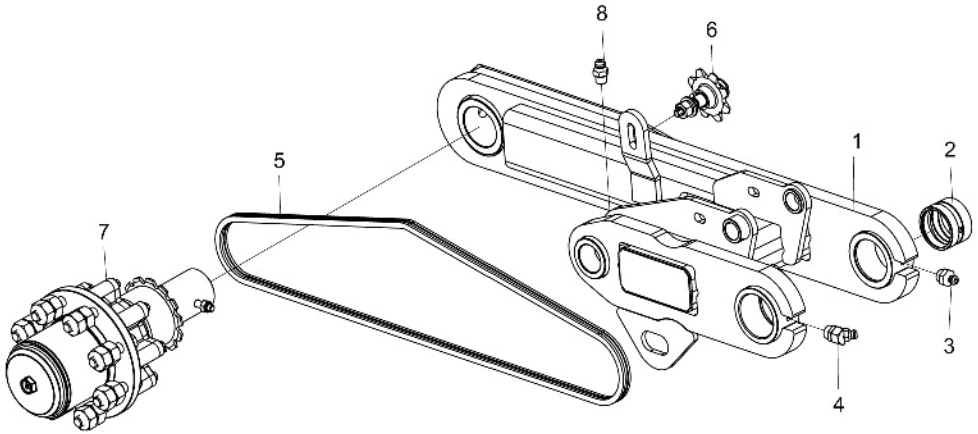

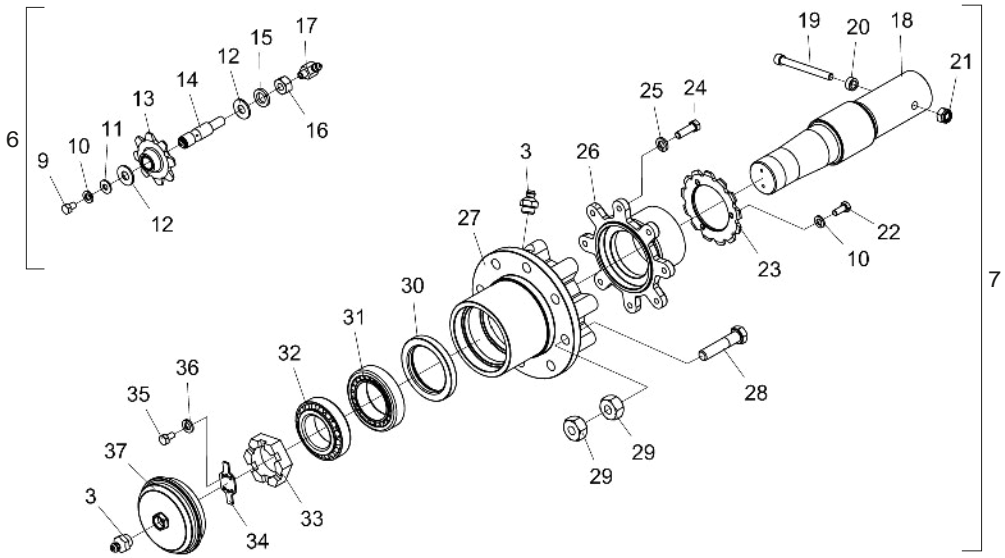

Item	Code	Product description	All	Right	Left
1	5530016458-6	Articulation Right Support		1	
1	5530016461-6	Articulation Left Support			1
2	5080012000-1	Articulation Bushing	2		
3	6020130108-7	Grease Fitting 1/8"	3		
4	6020130110-9	Grease Fitting 1/8"	1		
5	6020050232-1	Chain 2050 Of 73 Links + Amendment	1		
6	5268010203-1	Complete Chain Stretcher	1		
7	5232012068-3	Complete Wheel Shaft Sipb	1		
8	6020130100-1	Grease Fitting 1/4"		1	
9	6020311020-3	Hexagonal Head Bolt 5/16" X 1/2" 18F Unc1A Gr2 Rt	1		
10	6020010404-0	Pressure Washer 5/16" Media Industry	4		
11	5024010073-5	Smooth Washer Ø8,5 X Ø20 X 2,00mm	1		
12	5024010239-8	Smooth Washer Ø16,5 X Ø37 X 3,00mm	2		
13	5256010084-1	Gear 8 Teeth With Bronze	1		
14	5232010475-0	Stretcher Shaft With Channel And Hole	1		
15	6020010412-1	Pressure Washer 5/8" Media Industry	1		
16	6020310760-1	Hexagonal Nut 5/8" 11F Unc Gr5 Ch.1.1/16" Height 15,00mm	1		
17	6020130106-0	Grease Fitting 1/4"	1		
18	5232012067-5	Wheel Shaft	1		
19	6020310367-3	Allen Screw C/C M12 X 1.75 X 120mm Cl12.9 Rp	1		
20	5080020168-0	Bushing Of Ø13,49 X Ø7/8" X 10mm	1		
21	6020310847-0	Self-Locking Nut With Nylon M12 X 1 ,75 Ma Cl8 Ch.19mm H.12,00mm	1		
22	6020311269-9	Hexagonal Head Bolt M8 X 1,25 X 20mm Cl8.8 Rt	3		
23	5256030070-0	Gear 13 Teeth With Central Hole Ø86,3mm	1		
24	6020310026-7	Hexagonal Head Bolt 3/8" X 1.1/4" 16F Unc1A Gr5 Rt	8		
25	6020010406-7	Pressure Washer 3/8" Media Industry	8		
26	5284010162-2	Wheel Hub Flange	1		
27	5204010470-4	Wheel Hub	1		
28	6020310056-9	Hexagonal Head Bolt 3/4" X 3.1/2" 16F Unf1A Gr5 Rp	8		
29	6020310803-9	Conic Hexagonal Nut 3/4" 16F Unf Gr5 Ch.1.1/2" Height 22,00mm	16		
30	6020350280-2	Retainer Ø87,30 X Ø120,80 X 14,30mm	1		
31	6020350854-1	Bearing K-33287 / K-33462 (First Line)	1		
32	6020350855-0	Bearing K-3982 / K-3920 (First Line)	1		
33	5456020010-5	Nut 2.1/2" 12F	1		
34	5558010080-4	Lock(Large)	1		
35	6020311000-9	Hexagonal Head Bolt 1/4" X 1/2" 20F Unc1A Gr5 Rt	2		
36	6020010402-4	Pressure Washer 1/4" Media Industry	2		
37	5096010051-1	Hub Cap	1		

• Complete Lifting Support 7000

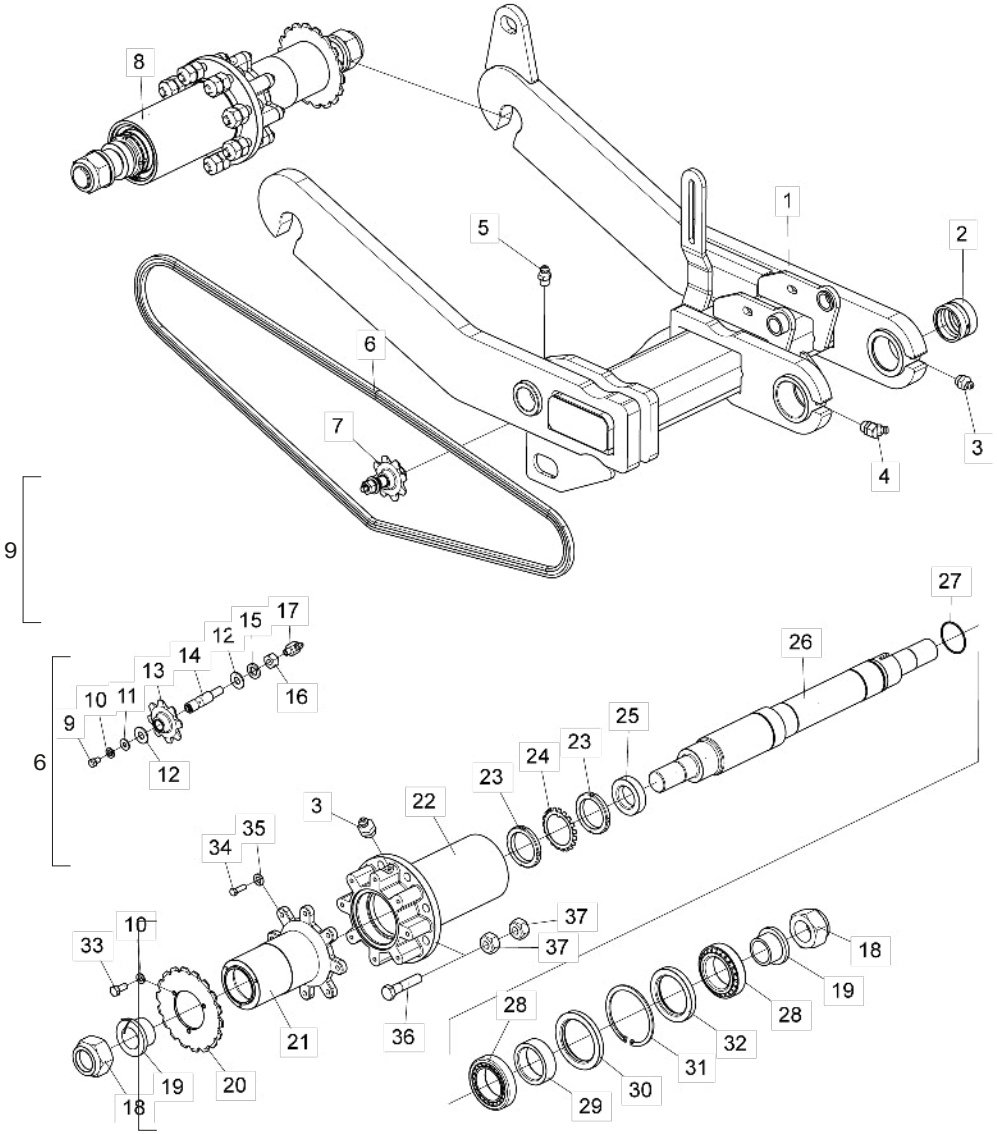

Item	Code	Product description	All	Right	Left
1	5530018337-8	Articulation Right Support Articulation For Transport Lateral Skadi		1	
1	5530018338-6	Articulation Left Support Articulation (Skadi)			1
2	5080012000-1	Articulation Bushing	2		
3	6020130108-7	Grease Fitting 1/8"	2		
4	6020130110-9	Grease Fitting 1/8"	1		
5	6020130100-1	Grease Fitting 1/4"		1	
6	6020059010-7	Chain 2050 87 Links + Amendment	1		
7	5268010203-1	Complete Chain Stretcher	2		
8	5232012488-3	Complete Wheel Shaft Tires 500/60(Skadi)	1		
9	6020311020-3	Hexagonal Head Bolt 5/16" X 1/2" 18F Unc1A Gr2 Rt	2		
10	6020010404-0	Pressure Washer 5/16" Media Industry	5		
11	5024010073-5	Smooth Washer Ø8,5 X Ø20 X 2,00mm	2		
12	5024010239-8	Smooth Washer Ø16,5 X Ø37 X 3,00mm	4		
13	5256010084-1	Gear 8 Teeth With Bronze	2		
14	5232010475-0	Stretcher Shaft With Channel And Hole	2		
15	6020010412-1	Pressure Washer 5/8" Media Industry	2		
16	6020310760-1	Hexagonal Nut 5/8" 11F Unc Gr5 Ch.1.1/16" Height 15,00mm	2		
17	6020130106-0	Grease Fitting 1/4"	2		
18	6020311267-2	Self-Locking Nut With Nylon M48 X 5,00 Ma Cl8 Ch.75mm H.48,00mm	2		
19	5080012154-7	Bushing Of Ø49 X Ø82,55 X 45Mm	2		
20	5256010516-9	Gear 18 Teeths	1		
21	5284010153-3	Flange Of Wheel Hub	1		
22	5204010575-1	Wheel Hub	1		
23	6020317592-5	Nut Bkm-14 R.M70 X 2	2		
24	6020016028-5	Washer Mb-14 Ø70 X Ø98 X 1,50Mm	1		
25	5080012155-5	Bushing Of Ø49 X Ø82,55 X 20Mm	1		
26	5232012489-1	Large Shaft Of Wheel	1		
27	6020016027-7	O'Ring Ø66,34 X 2,62 (2-146) Estático	1		
28	6020350854-1	Bearing K-33287 / K-33462 (First Line)	2		
29	5080012162-8	Backrest Bushing	1		
30	6020351015-5	Retainer Ø94,90 X Ø129,95 X 13,00Mm	1		
31	6020010364-8	Retaining Ring I-130	1		
32	6020351014-7	Retainer Ø87,30 X Ø120,80 X 14,30Mm	1		
33	6020312020-9	Hexagonal Head Bolt 5/16" X 3/4" 18F Unc1A Gr5 Rt	3		
34	6020310026-7	Hexagonal Head Bolt 3/8" X 1.1/4" 16F Unc1A Gr5 Rt	8		
35	6020010406-7	Pressure Washer 3/8" Media Industry	8		
36	6020310056-9	Hexagonal Head Bolt 3/4" X 3.1/2" 16F Unf1A Gr5 Rp	8		
37	6020310803-9	Conic Hexagonal Nut 3/4" 16F Unf Gr5 Ch.1.1/2" Height 22,00mm	16		

• Complete Right/Left Wheel

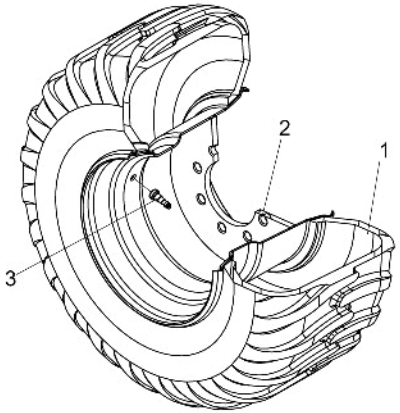

Item	Code	Product description	All	5000 / 6000	7000
1	6020310415-7	Tyre 400/60 15.5/14 Traction		1	
1	6020311306-7	Tyre 500/60 - 22.5 16 Pr Tr-08 TI			1
2	6020015935-0	Ring Ag 13,00 X 15,50		1	
2	6020351011-2	Wheel Ag 15° Dc 16" X 22,5" Offset 6,35mm			1
3	6020410040-6	Tyre Valve Tr-618 A	1		

• Main Frame Cylinder

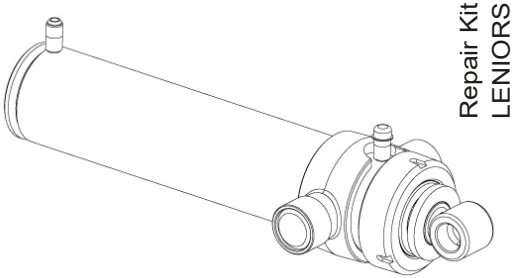

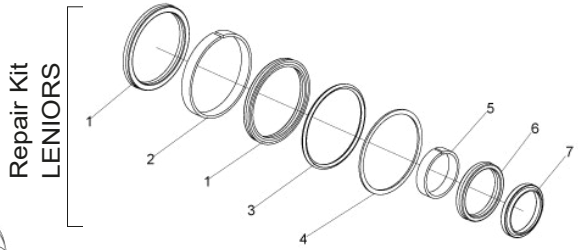

Item	Code	Product description	All
		Repair Kit LENIORS	
1	J007389	Gasket Std 3120-3375 (Ø3.3/8" x Ø 4" x 5/16")	2
2		Guide Ring W2-4000-500 (Ø4" x 1/2")	1
3		O´Ring 2-342 (Ø91,44 x Ø5,33mm)	1
4		Parback 8-342	1
5		Guide Ring W2-2250-500 (Ø2.1/4" x 1/2")	1
6		Gasket B 2500-2000-375B (Ø2xØ2-1-2x3-8)	1
7		Cleaner D-2000	1
-	6020190207-2	Repair Kit Leniors J007389	1

For spare parts order, please check in the cylinder jacket (1), the following: - Baldan part number with 11 numbers, the manufacturer code, name and manufacturer date.

• Speed Box

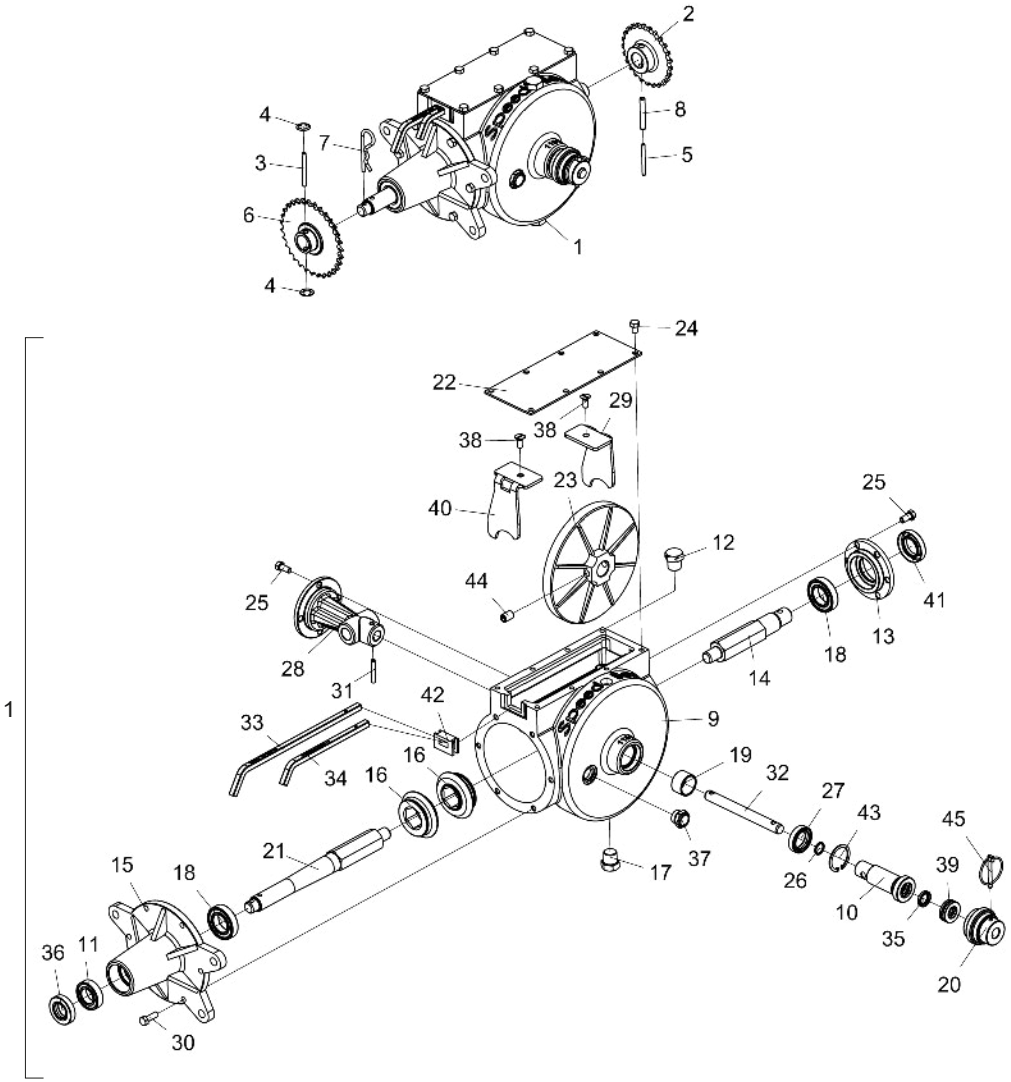

Item	Code	Product description	All	Right	Left
1	5092010205-8	Complete Right Speed Box		1	
1	5092010206-6	Complete Left Speed Box			1
2	5256010509-6	Gear 13 Teeths	1		
3	5432010040-5	Fuse Pin Ø6 X 60mm	1		
4	6020010326-5	Retaining Oring	2		
5	6020317571-2	Pino Elástico Pesado Ø5 X 40mm (Seeger Reno 701.142)	1		
6	5256010054-0	Complete Gear 20/31 Teeth	1		
7	6020390308-4	Lock Nma - Type "R" Ø4,5 X 80mm	1		
8	6020310508-0	Heavy Elastic Pin Ø8 X 40mm	1		
9	5112010011-8	Right Gear Box Housing		1	
9	5112010012-6	Left Gear Box Housing			1
10	5080010232-1	Bushing Of Ø25 X 100mm	1		
11	6020350075-3	Bearing 6005 2Rs	1		
12	5081010013-0	Plug R.1/2 X 14 Npt W/Hole 3,00mm	1		
13	5538010086-9	Front Cover Of Reduction Box	1		
14	5232120183-0	Small Shaft Of Gear Box	1		
15	5538010093-1	Cover Of Reduction Box	1		
16	6020010999-9	Gear 21 Teeth	2		
17	5081010012-2	Plug R.1/2 X 14 Npt	1		
18	6020350006-0	Bearing 6006 2Rs Ddu	2		
19	5080020804-9	Bushing Of Ø30 X Ø35 X 21mm	1		
20	5468010024-4	Shaft Handle	1		
21	5232010695-8	Small Shaft Of Gear Box	1		
22	5538060003-9	Cover Of 100 X 250 X 3,00mm	1		
23	5256060005-4	Crown Of Reduction Box	1		
24	6020311020-3	Hexagonal Head Bolt 5/16" X 1/2" 18F Unc1A Gr2 Rt	8		
25	6020312020-9	Hexagonal Head Bolt 5/16" X 3/4" 18F Unc1A Gr5 Rt	10		
26	6020010022-3	O´Ring 2-114 N3006-90Nbr (15,54)	1		
27	6020350275-6	Retainer Ø30,00 X Ø43,00 X 9,50mm	1		
28	5538010085-0	Rear Cover	1		
29	5554010017-8	Right Support	1		
30	6020310038-0	Hexagonal Head Bolt 5/16" X 1" 18F Unc1A Gr5 Rt	6		
31	6020310506-4	Heavy Elastic Pin Ø6 X 40mm	1		
32	5232020209-4	Shaft Ø5/8" X 157mm	1		
33	5260040006-1	Alphabetical Regulating Shaft De 299mm	1		
34	5260040007-0	Numerical Regulating Shaft De 200mm	1		
35	6020350274-8	Retainer Ø15,90 X Ø25,40 X 4,50mm	1		
36	6020350204-7	Retainer Ø25,00 X Ø47,00 X 10,00mm	1		
37	6020430323-4	Oil Sight Plastic 1/2"	1		
38	6020312502-2	Bolt Nº10 X 1/2" 24F Unc2A Gr2 Rt	2		
39	6020350086-9	Bearing Skf 51203	1		
40	5554010015-1	Left Support	1		
41	6020350245-4	Retainer Ø30,00 X Ø52,00 X 10,00mm	1		
42	6020030015-0	Protection Speed Box Protection With Hole	1		
43	6020010305-2	Retaining Ring I-42	1		
44	6020317426-0	Allen Bolt S/C 1/2" X 3/4" 12F W Cl12.9 Rt (Phosphated)	2		
45	6020390301-7	Lock Ø5,75 X 50mm	1		

• Complete Hitch Drawbar

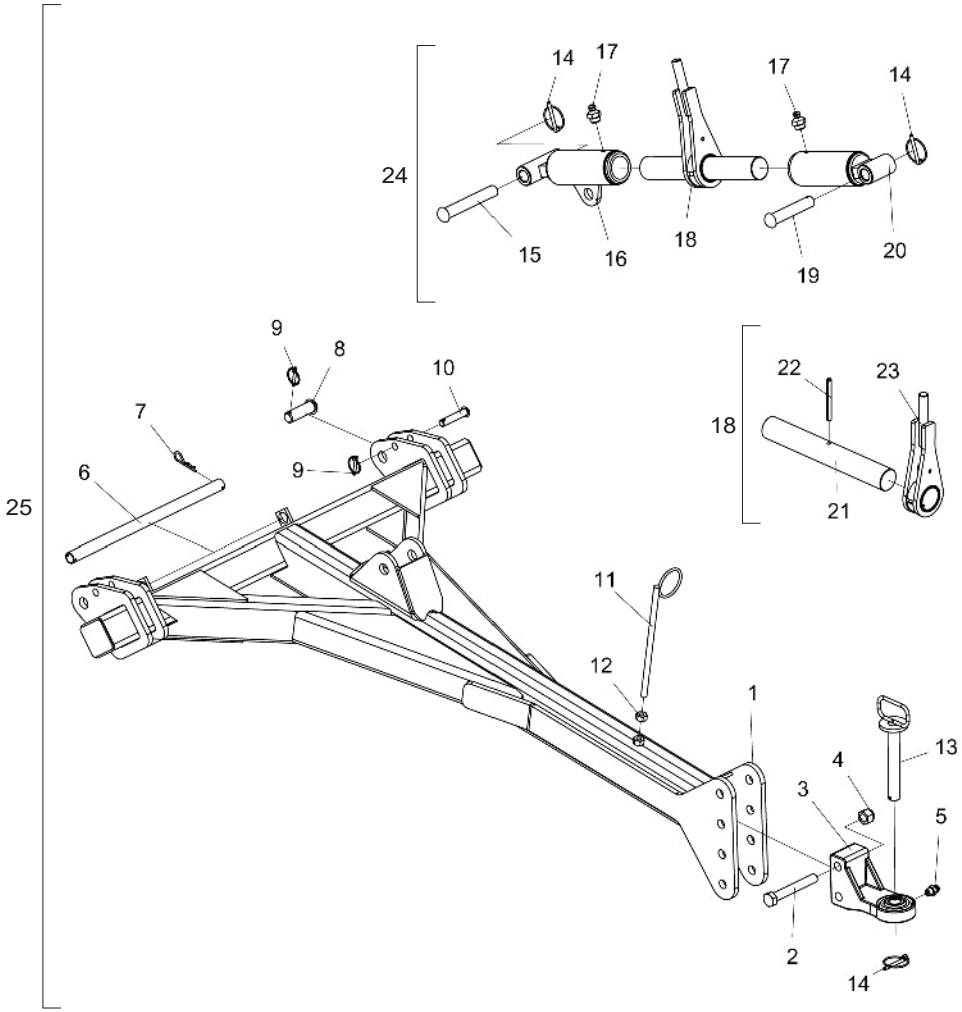

Item	Code	Product description	All
1	5084010279-0	Hitch Drawbar Sipb	1
2	6020310353-3	Hexagonal Head Bolt M24 X 3,00 X 170mm Cl8.8 Rp	2
3	5332010090-5	Hitch Shackle	1
4	6020310338-0	Self-Locking Nut With Nylon M24 X 3,00 Ma Cl8 Ch.36mm H.15,00mm(White Galnanised)	2
5	6020130100-1	Grease Fitting 1/4"	1
6	5552010178-0	Tube Of Ø26,8 X Ø32 X 600mm	1
7	6020390294-0	Lock Nma - Type "R" Ø3,5 X 67mm(Special)	2
8	6020310665-6	French Head Pin Ø30,53 X 85mm	2
9	6020390293-2	Lock Ø5,75 X 40mm	4
10	5432120028-4	French Head Pin Ø3/4" X 86mm	2
11	5530060001-7	Small Support Of Hoses	1
12	6020310760-1	Hexagonal Nut 5/8" 11F Unc Gr5 Ch.1.1/16" Height 15,00mm	1
13	5432010025-1	Pin Ø1.1/4" X 215mm	1
14	6020390301-7	Lock Ø5,75 X 50mm	3
15	5432010236-0	French Head Pin Ø30,53 X 190mm	1
16	5484010168-4	Right Regulator of 3rd Hitch Point	1
17	6020130108-7	Grease Fitting 1/8"	2
18	5232010530-7	Complete Regulator Shaft Of 3 Point	1
19	6020310638-9	Pin Ø30,53 X 148mm	1
20	5484010047-5	Left Regulator 3º Point	1
21	5232010519-6	Ratchet Shaft Of Regulator 3 Point	1
22	6020310473-4	Heavy Elastic Pin Ø10 X 100mm	1
23	5132010010-4	Complete Ratchet Of Regulator Of 3º Point Hitch	1
24	5484010169-2	Regulator 3ºpoint Complete	1
25	5084010280-4	Complete Hitch Drawbar()	1

The Hitch Drawbar consists of all the parts listed in this list. However, when sold complete, items 6 to 24 will not accompany it.

• Seed/Fertilizer Hopper (Fertisystem) Complete

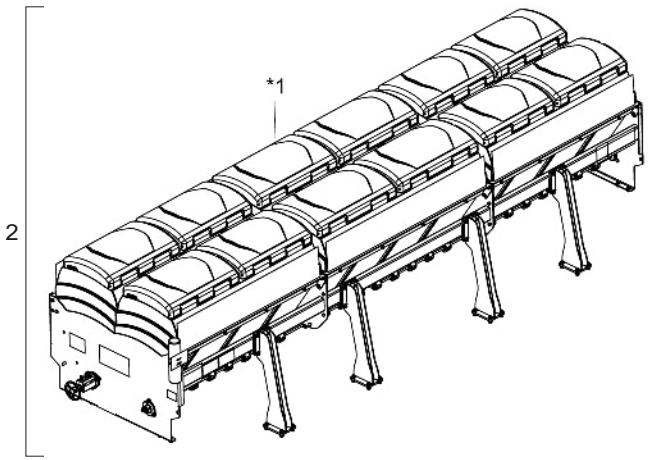

Item	Code	Product description	All	5000	6000	7000
1	5208013055-4	Seed and Fertilizer Hopper Skadi 5000(Fertisystem)		1		
1	5208013054-6	Seed and Fertilizer Hopper Skadi 6000(Fertisystem)			1	
1	5208013077-5	Seed and Fertilizer Hopper Skadi 7000(Fertisystem)				1
2	5208013056-2	Seed and Fertilizer Hopper Skadi 5000(Fertisystem) Complete		1		
2	5208013053-8	Seed and Fertilizer Hopper Skadi 6000(Fertisystem) Complete			1	
2	5208013075-9	Seed and Fertilizer Hopper Skadi 7000(Fertisystem) Complete				1

* Item 1 - See page 15

• Complete Seed/Fertilizer Hopper (Fertisystem) W/ Pasture Seed Hopper 5000/6000

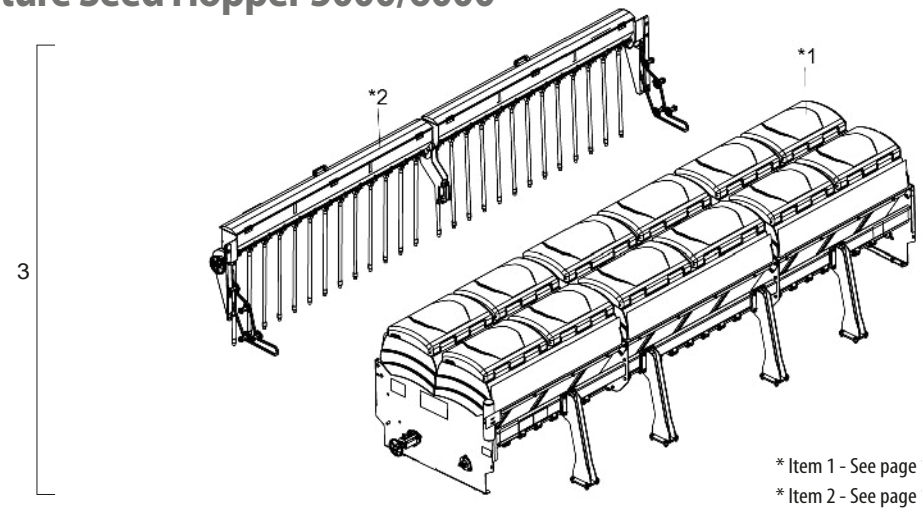

Item	Code	Product description	All	5000	6000
1	5208013055-4	Seed and Fertilizer Hopper Skadi 5000(Fertisystem)		1	
1	5208013054-6	Seed and Fertilizer Hopper Skadi 6000(Fertisystem)			1
2	5092010574-0	Complete Pasture Seed Hopper		1	
2	5092010591-0	Complete Pasture Seed Hopper			1
3	5208013057-0	Seed and Fertilizer Hopper Skadi 5000(Fertisystem) W/Pasture Seed Hopper		1	
3	5208013052-0	Seed and Fertilizer Hopper Skadi 6000(Fertisystem) W/Pasture Seed Hopper			1

* Item 1 - See page 15
* Item 2 - See page 18

• Seed/Fertilizer Hopper

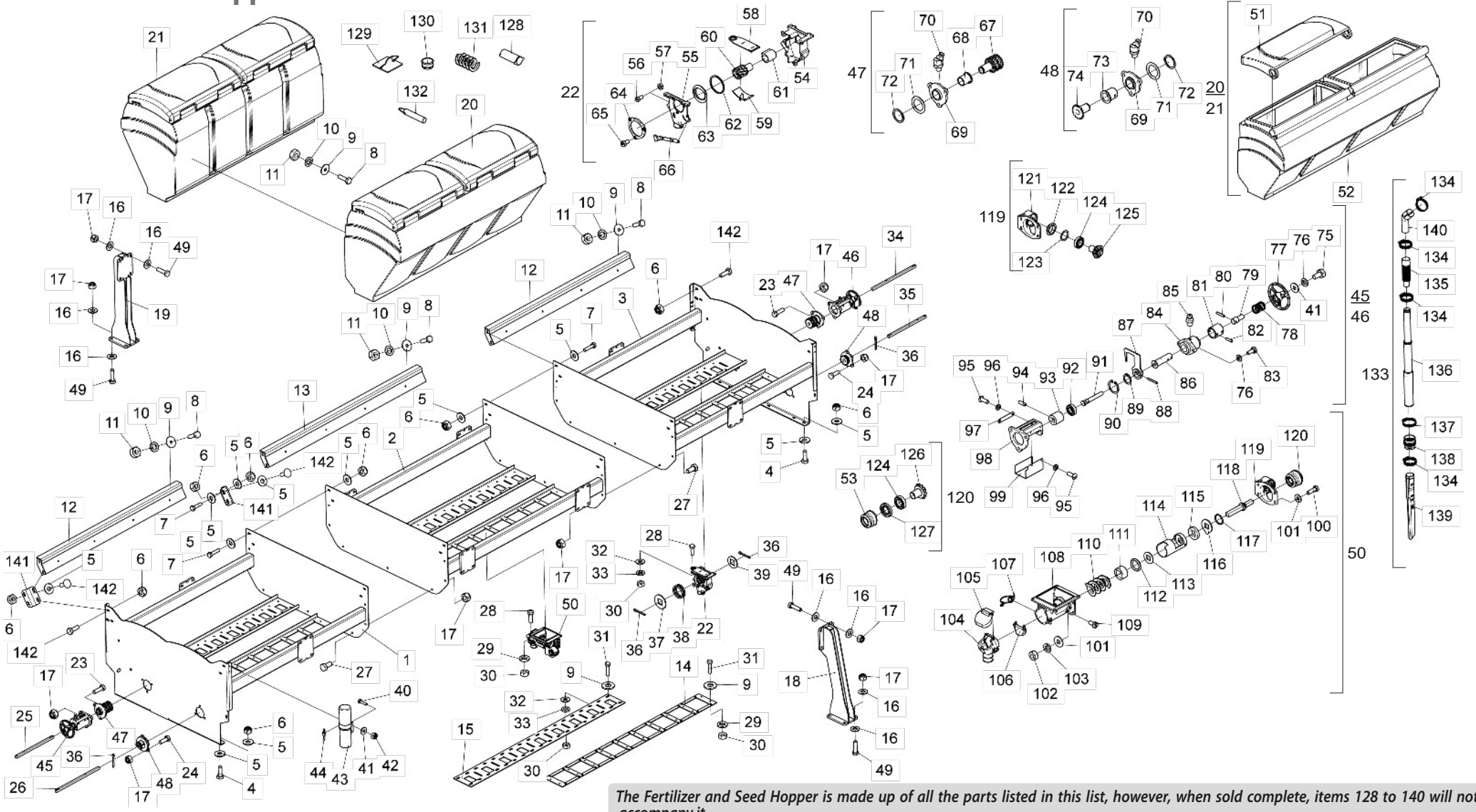

The Fertilizer and Seed Hopper is made up of all the parts listed in this list, however, when sold complete, items 128 to 140 will not accompany it.

BALDAN

• Table Seed/Fertilizer Hopper

Item	Code	Product description	All	5000	6000	7000
1	5530017815-3	Right Support 1447mm		1		
1	5530017807-2	Right Support 1617mm			1	
1	5530018051-4	Right Support 1968mm				1
2	5530017817-0	Central Support 1617mm		1		
2	5530017809-9	Central Support 1906mm			1	
2	5530018163-4	Central Support 1906mm				1
3	5530017816-1	Left Support 1447mm		1		
3	5530017808-0	Left Support 1617mm			1	
3	5530018052-2	Left Support 1968mm				1
4	6020317475-9	Hexagonal Head Bolt M10 X 1,50 X 30mm Cl8.8 Rt		8	14	14
5	5024010075-1	Smooth Washer Ø10,3 X Ø25 X 2,00mm		32	44	68
6	6020317435-0	Self-Locking Nut With Nylon M10 X 1,50 Ma Cl8 Ch.17mm H.10,00mm		24	30	54
7	6020311206-0	Hexagonal Head Bolt M10 X 1,50 X 45mm Cl8.8 Rt	8			
8	6020317389-2	Hexagonal Head Bolt (Inox) 3/8" X 1.1/4" 16F Unc2A Rt	36			
9	5024010428-5	Stainless Smooth Washer Of Ø10,50 X Ø40 X 2,50mm	84			
10	6020015921-0	Pressure Washer Inox M10 Mean	36			
11	6020310355-0	Brass Hexagonal Bolt M10 X 1,50 Ma Ch.17mm Alt8,00mm	36			
12	5530016878-6	Support 1615mm		2	4	
12	5530018161-8	Support 1930Mm				4
13	5530016877-8	Support		4		
13	5530017636-3	Support 1894mm			2	
13	5530018162-6	Support 1870Mm				2
14	5136018973-6	Fertilizer Conductor Plate - 1420mm		2		
14	5136018974-4	Fertilizer Conductor Plate - 1590mm		1	2	
14	5136018975-2	Fertilizer Conductor Plate - 1869mm			1	3
15	5136018976-0	Seed Hopper plate - 1590mm		1		
15	5136018977-9	Seed Hopper plate - 1869mm			1	1
15	5136018978-7	Seed Hopper lateral Plate - 1420mm		2		
15	5136018979-5	Seed Hopper lateral Plate - 1590mm			2	
15	5136019641-4	Seed Hopper lateral Plate - 1869mm				2
16	5024010162-6	Smooth Washer Ø13 X Ø26 X 2,00mm	128			
17	6020310847-0	Self-Locking Nut With Nylon M12 X 1 ,75 Ma Cl8 Ch.19mm H.12,00mm	90			
18	5530017812-9	Front Support	4			
19	5530017813-7	Rear Support of Seed Hopper	4			
20	6020072110-4	Fertilizer Hopper 1442mm		2		
20	6020072113-9	Fertilizer Hopper 1612mm		1	2	
20	6020078875-6	Fertilizer Hopper 1890mm			1	3
21	6020072111-2	Seed Hopper 1442mm		2		
21	6020072114-7	Seed Hopper 1612mm		1	2	
21	6020078874-8	Seed Hopper 1890mm			1	3
22	6020072084-1	Pneumatic Batcher(Nardi-88002843)		25	29	33
23	6020310152-2	Hexagonal Head Bolt M12 X 1,75 X 40mm Cl8.8 Rp	6			
24	6020310439-4	Hexagonal Head Bolt M12 X 1,75 X 35mm Cl8.8 Rt	6			
25	5232012183-3	Seed Right Shaft 2408mm		1		
25	5232012303-8	Seed Right Shaft 2718mm			1	
25	5232012425-5	Seed Right Shaft 3058mm				1
26	5232012357-7	Fertilizer Shaft Sq.5/8" X 2145mm		1		

Item	Code	Product description	All	5000	6000	7000
26	5232012353-4	Fertilizer Shaft Sq.5/8" X 2455mm			1	
26	5232012422-0	Fertilizer Shaft Sq.5/8" X 2795mm				1
27	6020310070-4	Hexagonal Head Bolt M12 X 1,75 X 25mm Cl8.8 Rp	14			
28	6020310354-1	Hexagonal Head Bolt Inox M8 X 1,25 X 25mm Cl 8.8 Rt		164	196	228
29	6020010434-2	Pressure Washer Inox 5/16" Media		100	116	132
30	6020310730-0	Brass Hexagonal Nut M8 X 1,25 Ma Ch.13mm H.6,50mm		200	232	264
31	6020317413-9	Hexagonal Head Bolt Inox M8 X 1,25 X 40mm Ma Rt	36			
32	6020010431-8	Plain Inox Washer Ø8,5 X Ø18 X 1,8mm		100	116	132
33	6020015922-8	Pressure Washer Inox M8 Mean		100	116	132
34	5232012182-5	Seed Left Shaft 2228mm		1		
34	5232012304-6	Seed Left Shaft 2545mm			1	
34	5232012424-7	Seed Shaft 2885mm				1
35	5232012180-9	Fertilizer Shaft Sq.5/8" X 2400mm		1		
35	5232012306-2	Fertilizer Shaft Sq.5/8" X 2713mm			1	
35	5232012423-9	Fertilizer Shaft Sq.5/8" X 3060mm				1
36	6020050101-5	Cotterpin 1/8" X 1"		54	62	70
37	5024010083-2	Smooth Washer Sq.17 X Ø43 X 3,00mm		25	29	33
38	6020250252-3	Helical Spring Ø23 X Ø28 X 24mm		25	29	33
39	5024010368-8	Smooth Washer With Square Hole 17 X Ø36 X 2,50mm		25	29	33
40	6020310027-5	Hexagonal Head Bolt M6 X 1,00 X 25mm Cl8.8 Rt	2			
41	5024010161-8	Smooth Washer Ø7 X Ø18 X 2,00mm	2			
42	6020317442-2	Self-Locking Nut With Nylon Low M6 X 1,00 Ma Cl8 Ch.10mm H.6,00mm	2			
43	6020050642-4	Container For Instruction Manual	1			
44	6020230100-5	Seal For Container For Instruction Manual	1			
45	5484010158-7	Complete Right Seed Of Regulator	1			
46	5484010159-5	Complete Left Seed Of Regulator	1			
47	5204010383-0	Complete Seed Shaft Hub	2			
48	5204010311-2	Complete Fertilizer Shaft Hub	2			
49	6020310441-6	Hexagonal Head Bolt M12 X 1,75 X 45mm Cl8.8 Rt	64			
50	6020051126-6	Batcher Kit Fertisystem Auto-Lub Ap/2D Ng Me(Fertisystem 11110000)		25	29	33
51	6020395091-0	Seed and Fertilizer Hopper Cover 685mm - Lateral		8		
51	6020395092-9	Seed and Fertilizer Hopper Cover 770mm - Central		4		
51	6020395092-9	Seed and Fertilizer Hopper Cover 770mm - Central			8	
51	6020395127-5	Seed and Fertilizer Hopper Cover 910mm - Central			4	
51	6020395127-5	Seed and Fertilizer Hopper Cover 910mm - Central				12
52	6020058654-1	Hopper 1442mm - Fertilizer (Lateral)		2		
52	6020058656-8	Hopper 1612mm - Fertilizer (Central)		1		
52	6020058655-0	Hopper 1442mm - Seed (Lateral)		2		
52	6020058657-6	Hopper 1612mm - Seed (Central)		1		
52	6020058656-8	Hopper 1612mm - Fertilizer (Central)			2	
52	6020059124-3	Hopper 890mm - Seed and Fertilizer (Lateral and Central)			1	
52	6020058657-6	Hopper 1612mm - Seed (Central)			2	
52	6020059123-5	Hopper 1890mm - Seed (Central)			1	
52	6020059124-3	Hopper 890mm - Seed and Fertilizer (Lateral and Central)				6
53	6020030074-5	Bushing (200201010)	1			
54	6020058580-4	Protection Cap (2000) (04.40.00)	1			
55	6020058579-0	Protection Cap (2000) (04.40.00)	1			

• Table Seed/Fertilizer Hopper

Item	Code	Product description	All	5000	6000	7000
56	6020317400-7	Bolt M6 X 12mm (Amp 851.009)	6			
57	6020317402-3	Hexagonal Nut M6(Amp 851,007)	6			
58	6020395083-0	Cover Fertipo (200201023)	1			
59	6020350964-5	Coat (300304002)	1			
60	6020350963-7	Rotor (Amp 851.014)	1			
61	6020030788-0	Bushing (200201010)	1			
62	6020015940-6	Plastic Ring 0185mm X 5,00mm	1			
63	6020015941-4	Cleaning Washer (200201004)	1			
64	6020058578-2	Protection Cap (2000) (04.40.00)	1			
65	6020317401-5	Bolt M5 X 8mm (Amp 851.013)	3			
66	6020350965-3	Regulator Of Seed Input (Nardi-11760447)	1			
67	5256010101-5	Triple Gear Of Transmission 17 Teeth	1			
68	5080010552-5	Bronze Bushing	1			
69	5204010384-8	Seed Shaft Hub	1			
69	5204010310-4	Fertilizer Shaft Hub	1			
70	6020130104-4	Grease Fitting 1/4"	2			
71	5024010374-2	Smooth Washer Ø36 X Ø52 X 1,50mm(Inox)	2			
72	6020010307-9	Retaining Ring E-36	2			
73	5080010548-7	Bronze Bushing	1			
74	5256010109-0	Gear 17 Teeth	1			
75	6020311000-9	Hexagonal Head Bolt 1/4" X 1/2" 20F Unc1A Gr5 Rt	1			
76	6020010402-4	Pressure Washer 1/4" Media Industry	3			
77	5484010160-9	Seed Hopper Regulator	1			
78	6020250577-8	Helical Spring Ø12,5 X Ø16,5 X 19mm	1			
79	5232011663-5	Spring Shaft	1			
80	6020310502-1	Heavy Elastic Pin Ø5 X 24mm	1			
81	5080011496-6	Back Bushing	1			
82	6020312084-5	Heavy Elastic Pin Ø5 X 18mm	2			
83	6020311001-7	Hexagonal Head Bolt 1/4" X 5/8" 20F Unc1A Gr5 Rt	2			
84	5530015696-6	Fixation Support Of Steering Wheel	1			
85	6020130100-1	Grease Fitting 1/4"	1			
86	5232011662-7	Seed Regulating Shaft	1			
87	5530015670-2	Support Of Regulating Arrow	1			
88	6020310470-0	Heavy Elastic Pin Ø3 X 24mm	1			
89	6020010250-1	Retaining Oring	1			
90	6020011054-7	Retaining Ring I-032	1			
91	5232011655-4	Seed Regulating Shaft	1			
92	6020350887-8	Sphere Rigid Bearing 6002 Zz	1			
93	5080011452-4	Bushing Of Regulator Seed	1			
94	6020312003-9	Allen Bolt S/C 5/16" X 1" 18F Unc1A Cl12.9 Rt (Phosphated)	1			
95	6020310119-0	Bolt 3/16" X 1/2" 24F Unc1A Gr5 Rt	4			
96	6020010400-8	Pressure Washer 3/16" Media Industry	4			
97	5136015357-0	Plate Of Adjustment Of 50 A 0mm	1			
98	5530015695-8	Fixation Support Of Regulator	1			
99	5464010386-0	Left Protection Of Seed Regulator	1			
99	5464010385-2	Right Protection Of Seed Regulator	1			
100	6020310561-7	Hexagonal Head Bolt M8 X 1,25 X 25mm Cl 5.8 Rt	4			

Item	Code	Product description	All	5000	6000	7000
101	5024010073-5	Smooth Washer Ø8,5 X Ø20 X 2,00mm	8			
102	6020310454-8	Hexagonal Nut M8 X 1,25 Ma Cl8 Ch.13mm H.6,50mm	4			
103	6020010404-0	Pressure Washer 5/16" Media Industry	4			
104	6020030302-7	Nozzle Ng(200201014)	1			
105	6020051127-4	Nozzle Cover Kit Ng(300304006)Emb. C/ 5	1			
106	6020390067-0	Transversal Cover (200201008)	1			
107	6020310680-0	Clamp 0,70	2			
108	6020051128-2	Main Body Ng(200201013)	1			
109	6020310295-2	Hexaon Head Slotted Bolt M8 X 16mm (200205002)	2			
110	6020370042-6	Spring S 1" Right "Optional" (Fertisystem 300305001)	1			
110	6020370259-3	Spring S 1" Left "Optional"(Fertisystem 300305003)	1			
111	6020010230-7	Lock Ring (200201007)	1			
112	6020010008-8	O´Ring Fk1-209 3,5 X 17,5-Ref 2209(100103004)	1			
113	6020010503-9	Square Inox Washer (200202011)	1			
114	6020350530-5	Coat (300304002)	1			
115	6020110095-2	Felt (07000023)	1			
116	6020010504-7	Cleaning Washer (200201004)	1			
117	6020010041-0	O´Ring 2-219 N3009-90Nbr (32,92)	1			
118	6020090686-4	Shaft Ng(Fertysystem 200201038)	1			
119	6020250494-1	Self Lubricating Bearing Assembly(450451002)	1			
120	5528011026-3	Internal Bearing System for Drivers	1			
121	6020250417-8	Bearing Auto-Lub (07000070)	1			
122	6020310604-4	Bearing Protection (200201011)	1			
123	5024010243-6	Smooth Washer Ø30 X Ø39 X 0,91mm	2			
124	6020350006-0	Bearing 6006 2Rs Ddu	4			
125	6020310580-3	Actuation Pinion(200201012)	1			
126	6020310909-4	Pinion Drive	1			
127	6020350320-5	Retainer	1			
128	6020390093-0	Maintenance Tube	1			
129	5538010244-6	Complete Large Tube (Plastic Box)	1			
130	6020390815-9	Fertilizer Funnel Cover	1			
131	6020370041-8	Spring S 3/4" Right "Optional" (Fertisystem 300305005)	1			
131	6020370257-7	Spring S 3/4" Left "Optional"(Fertisystem 300305006)	1			
132	6020390092-1	Fixator Tube - "Optional" (300303005)	1			
133	5150010163-0	Telescopic Conductor W/Extender (Fertilizer)		25	29	33
133	5150010165-6	Telescopic Conductor W/Extender (Seed)		25	29	33
134	6020010706-6	Clamp 044 X 057 X 14.5mm (Carbon Steel)		100	116	132
135	6020250483-6	Hose Ø38 X Ø50,8 X 220mm		25	29	33
136	6020050666-1	Condutor Telescopico (Ref.260 200 05)		25	29	33
137	6020010711-2	Clamp 57-76 Ribbon 13/14mm		25	29	33
138	6020390844-2	Rubber Union Ø41 X Ø54 X 62mm		25	29	33
139	6020030672-7	Distributor Funnel 425mm		25	29	33
139	6020030671-9	Distributor Funnel 470mm		25	29	33
140	6020090064-5	Extension Of Fertilizer Hose		25	29	33
141	5136019747-0	Support Plate				12
142	6020317544-5	French Head Bolt M10 X 1,50 X 30mm Cl8.8 Rt		8	8	32

• Complete Pasture Seed Hopper 5000/6000

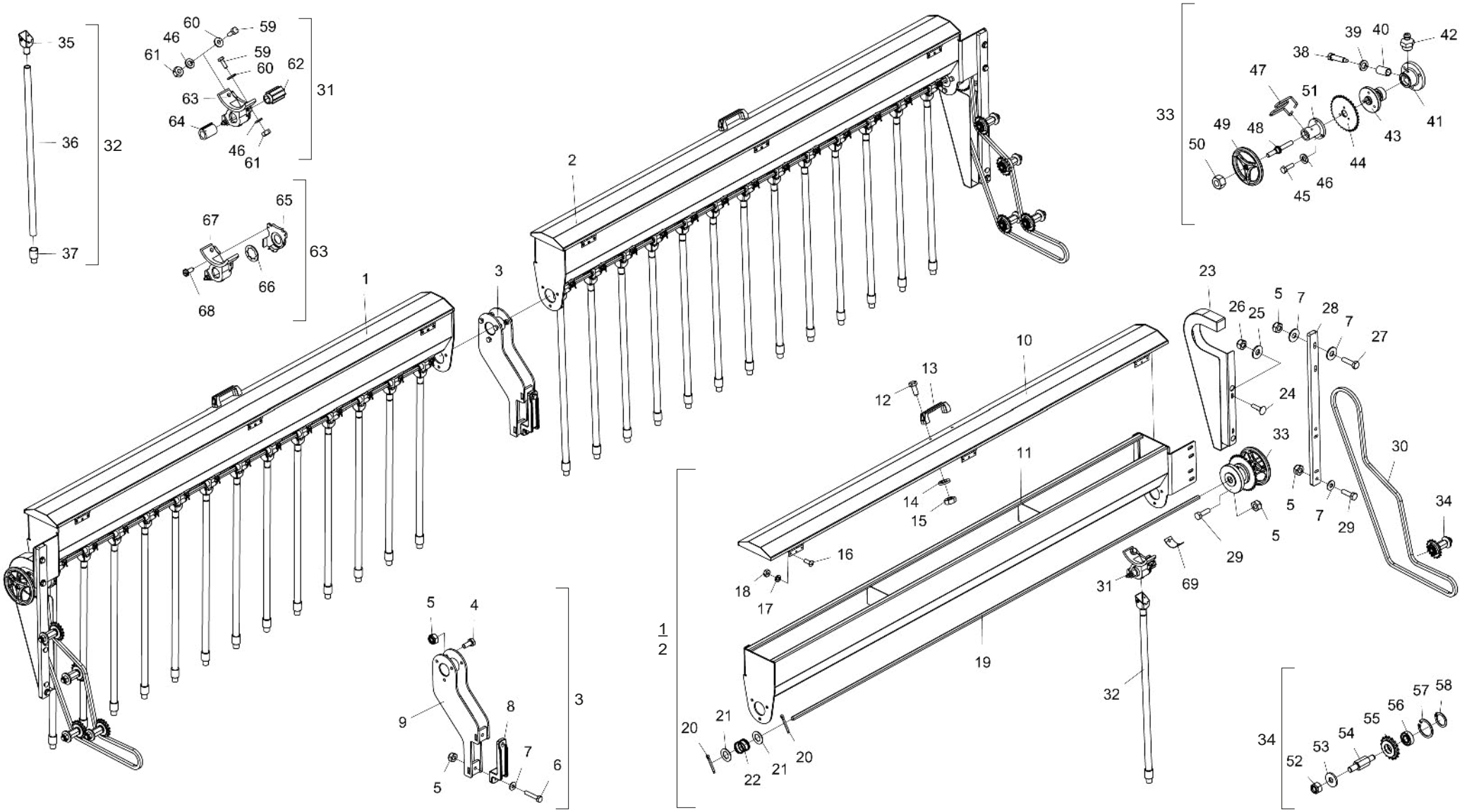

• Table Complete Pasture Seed Hopper 5000/6000

Item	Code	Product description	All	5000	6000
1	5092010576-6	Right Pasture Seed Hopper (5000)		1	
1	5092010592-8	Right Pasture Seed Hopper (6000)			1
2	5092010577-4	Left Pasture Seed Hopper (5000)		1	
2	5092010593-6	Left Pasture Seed Hopper (6000)			1
3	5530016469-1	Pasture Seed Box Support(Complete)	1		
4	6020310452-1	Hexagonal Head Bolt M10 X 1,50 X 25mm Cl8.8 Rt	6		
5	6020317435-0	Self-Locking Nut With Nylon M10 X 1,50 Ma Cl8 Ch.17mm H.10,00mm	15		
6	6020310269-3	Hexagonal Head Bolt M10 X 1,50 X 55mm Cl8.8 Rt	2		
7	5024010075-1	Smooth Washer Ø10,3 X Ø25 X 2,00mm	8		
8	6010602822-5	Clamp Fort Ube Of 50 X 100mm	1		
9	5530016468-3	Pasture Seed Hopper Support	1		
10	5538010653-0	Pasture Seed Hopper Cover		2	
10	5538010715-4	Pasture Seed Hopper Cover			2
11	5092010578-2	Right Pasture Seed Hopper		1	
11	5092010575-8	Left Pasture Seed Hopper		1	
11	5092010594-4	Right Pasture Seed Hopper 2420mm			1
11	5092010595-2	Left Pasture Seed Hopper 2420mm			1
12	6020310882-9	Hexagonal Head Bolt Inox 5/16" X 3/4" 18F Unc2A Rt	2		
13	6020010922-0	Nylon Belt Pmc 594 - 132 X 32 mm	1		
14	6020010434-2	Pressure Washer Inox 5/16" Media	2		
15	6020310744-0	Hexagonal Nut 5/16" 18F Unc Gr5 Ch.1/2" Height 6,50mm	2		
16	6020310119-0	Bolt 3/16" X 1/2" 24F Unc1A Gr5 Rt	9		
17	6020010400-8	Pressure Washer 3/16" Media Industry	9		
18	6020310740-7	Hexagonal Nut 3/16" 24F Unc Gr5 Ch.3/8" Height 4,50mm	9		
19	5232012186-8	Right Hexagonal Shaft 1/2" Pasture Seed Hopper		1	
19	5232012185-0	Left Hexagonal Shaft 1/2" Pasture Seed Hopper		1	
19	5232012302-0	Hexagonal Shaft 1/2" Pasture Seed Hopper 2490mm			2
20	6020050101-5	Cotterpin 1/8" X 1"		52	60
21	5024100001-7	Smooth Washer With Hexagonal Hole 13,5 X Ø25 X 1,21mm		52	60
22	6020250350-3	Helical Spring Ø16 X Ø18 X 16mm		26	30
23	5106010176-4	Left Ptotection Cover		1	1
23	5106010175-6	Right Ptotection Cover		1	1
24	6020310566-8	French Head Bolt M8 X 1,25 X 35mm Cl8.8 Rp	2		
25	5024010073-5	Smooth Washer Ø8,5 X Ø20 X 2,00mm	2		
26	6020317449-0	Self-Locking Nut With Nylon Low M8 X 1,25 Ma Cl8 Ch.13mm H.8,00mm	2		
27	6020310980-9	Hexagonal Head Bolt M10 X 1,50 X 40mm Cl8.8 Rt	2		
28	5136017360-0	Pasture Seed Hopper Fixation Plate	1		
29	6020310437-8	Hexagonal Head Bolt M10 X 1,50 X 35mm Cl8.8 Rt	5		
30	6020058836-6	Chain ASA 40 163 Links + Amendment	1		
31	5092100006-2	Complete Seed Distributor Box		26	30

Item	Code	Product description	All	5000	6000
32	5052010073-0	Nozzle		26	30
33	5484010182-0	Complete Left Regulator	1		
33	5484010181-1	Complete Right Regulator	1		
34	5268010847-1	Stretcher W/Gear 17 Teeths (ASA 40)	4		
35	6020030205-5	Plastic Funnel Of Pasture Seed		26	30
36	5372011593-6	Hose Ø5/8" X Ø1.5/16" X 720mm		26	30
37	5080011802-3	Technyl Bushing 50mm		26	30
38	6020311040-8	Hexagonal Head Bolt 7/16" X 2" 14F Unc1A Gr5 Rp	2		
39	6020010408-3	Pressure Washer 7/16" Media Industry	2		
40	5080020229-6	Bushing Of Ø14 X Ø19 X 33mm	2		
41	5204060009-4	Large Left Hub	1		
41	5204060007-8	Large Right Hub	1		
42	6020130108-7	Grease Fitting 1/8"	2		
43	5204010553-0	Hub W/Hexagonal Hole	2		
44	5256010487-1	Gear 34 Teeths (Ø25,5mm)	2		
45	6020311004-1	Hexagonal Head Bolt 1/4" X 7/8" 20F Unc1A Gr5 Rt	6		
46	6020010402-4	Pressure Washer 1/4" Media Industry	10		
47	6020010991-3	Regulator Lock	2		
48	5296010009-3	Regulator Spindle Of Shaft (Csf)	2		
49	5484010008-4	Fertilizer / Pasture Seed Hopper Regulator	2		
50	6020310746-6	Hexagonal Nut 3/8" 16F Unc Gr5 Ch.9/16" Height 8,50mm	2		
51	5484120001-5	Scale Regulator	2		
52	6020317443-0	Self-Locking Nut With Nylon M16 X 2,00 Ma Cl8 Ch.24mm H.16,00mm	4		
53	5024010298-3	Smooth Washer Ø17 X Ø44 X 4,75mm	4		
54	5232012104-3	Stretcher Shaft	4		
55	5256010366-2	Complete Gear 17 Teeth(Asa 40)	4		
56	6020350015-0	Bearing 6202 2Rs Ddu	4		
57	6020010284-6	Retaining Ring I-35	4		
58	6020010250-1	Retaining Oring	4		
59	6020311002-5	Hexagonal Head Bolt 1/4" X 3/4" 20F Unc1A Gr2 Rt		52	60
60	5024010161-8	Smooth Washer Ø7 X Ø18 X 2,00mm		52	60
61	6020310742-3	Hexagonal Nut 1/4" 20F Unc Gr5 Ch.7/16" Height 5,50mm		52	60
62	6020350771-5	Rotor Of Seed Distributor Hopper		26	30
63	6020050420-0	Seed Distributor Box		26	30
64	6020030082-6	Rotor Bushing		26	30
65	6020390416-1	Cover Of Seed Distributor Cover		26	30
66	5024010132-4	Smooth Washer Ø20 X Ø32 X 1,50mm W/Hole		26	30
67	6020050419-7	Seed Distributor Box		26	30
68	6020312404-2	Bolt Ø6,5 X Ø3,2 X 9,5mm		78	90
69	5538010207-1	Internal Cover Of Seed Box	1		

• Hydraulic System Without Row Marker5000/6000

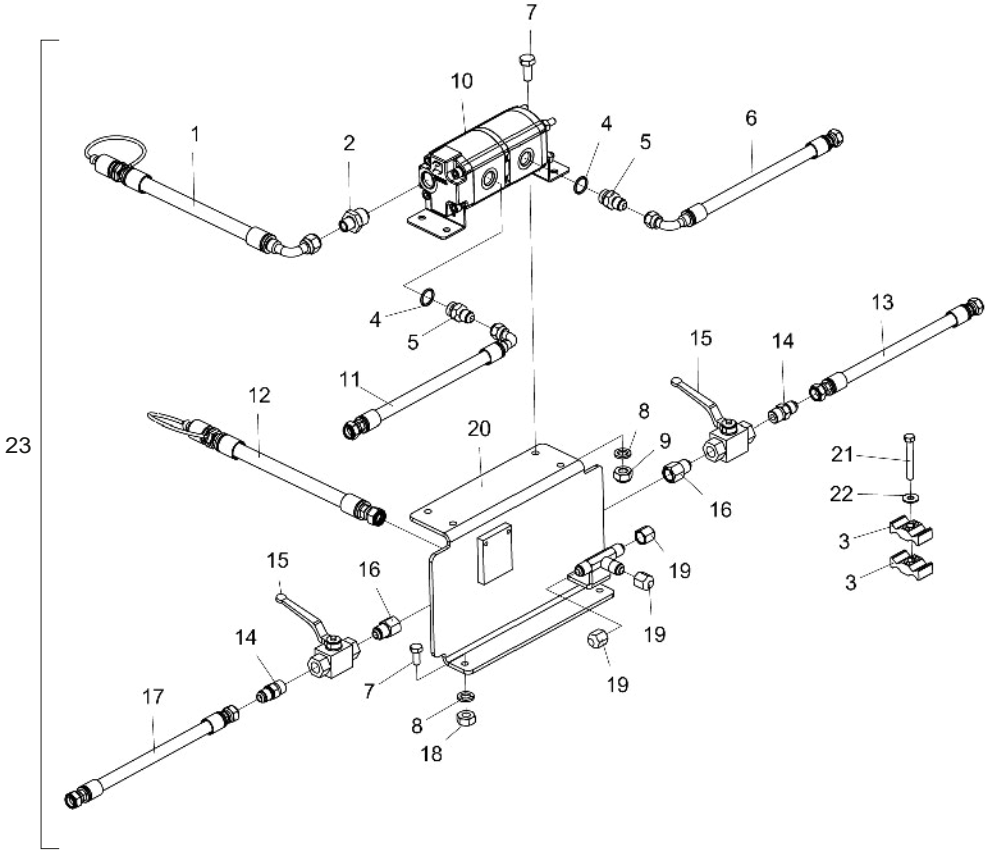

Item	Code	Product description	All	5000	6000
1	5372011592-8	Hose Ø1/2"W/ 1Trf and 1Tcg 4000mm W/Male Quick Coupling	1		
2	6020270120-8	Nipple Mf.3/4" Bsp-Or C/Cn Reb Hex X Mf.1/2" Bsp Jic Comp.44,70mm	1		
3	6020010723-6	Clamp (Ag3)	3		
4	6020010060-6	O´Ring 6-040 N3006-90Nbr (18,00)	2		
5	5412010088-5	Nipple R.7/8" Unf X R.3/4" Unf X 47mm With Hexagonal 1"	2		
6	5372011580-4	Hose Ø3/8"W/1Trg and 1Tcg 3400mm		1	
6	5372011581-2	Hose Ø3/8"W/1Trg and 1Tcg 3700mm			1
7	6020310452-1	Hexagonal Head Bolt M10 X 1,50 X 25mm Cl8.8 Rt	6		
8	6020010394-0	Pressure Washer M10 Media	6		
9	6020317435-0	Self-Locking Nut With Nylon M10 X 1,50 Ma Cl8 Ch.17mm H.10,00mm	4		
10	6020430283-1	Rotating Flow Divider Valve Of Gears Pld20/2/Cs-Od/16-Oc/16-	1		
11	5372011574-0	Hose Ø3/8"W/1Trg and 1Tcg 2100mm		1	
11	5372011575-8	Hose Ø3/8"W/1Trg and 1Tcg 2400mm			1
12	5372011590-1	Hose Ø1/2"W/ 1Trg and 1Trf 4000mm W/Male Quick Coupling	1		
13	5372011588-0	Hose Ø3/8"W/2Trg 3400mm		1	
13	5372011589-8	Hose Ø3/8"W/2Trg 3700mm			1
14	5412010099-0	Nipple R.1/2" Npt X R.3/4" Unf X 50mm With Hexagonal 7/8"	2		
15	6020430194-0	Sphere Valve 1/2" Npt Stauff:Bbvm20080200M / Gemels 1111Ab-	2		
16	5412010104-0	Nipple R.1/2"(G) X 3/4" Unf X 45mm With Hexagonal 1"	2		
17	5372011586-3	Hose Ø3/8"W/2Trg 2100mm		1	
17	5372011587-1	Hose Ø3/8"W/2Trg 2400mm			1
18	6020310822-5	Hexagonal Nut M10 X 1,50 Ma Cl8 Ch.17mm H.8,00mm	2		
19	5538010158-0	Cover Of Nipple R.3/4" Unf	3		
20	5530017193-0	Hydraulic System Support	1		
21	6020310026-7	Hexagonal Head Bolt 3/8" X 1.1/4" 16F Unc1A Gr5 Rt	3		
22	6020015973-2	Plate Clamp	3		
23	5528010991-5	Hydraulic System Skadi 25 Linhas Without Row Marker		1	
23	5528011039-5	Hydraulic System Skadi 29 Linhas Without Row Marker			1

• Hydraulic System Without Row Marker For Lateral Transport 5000/6000

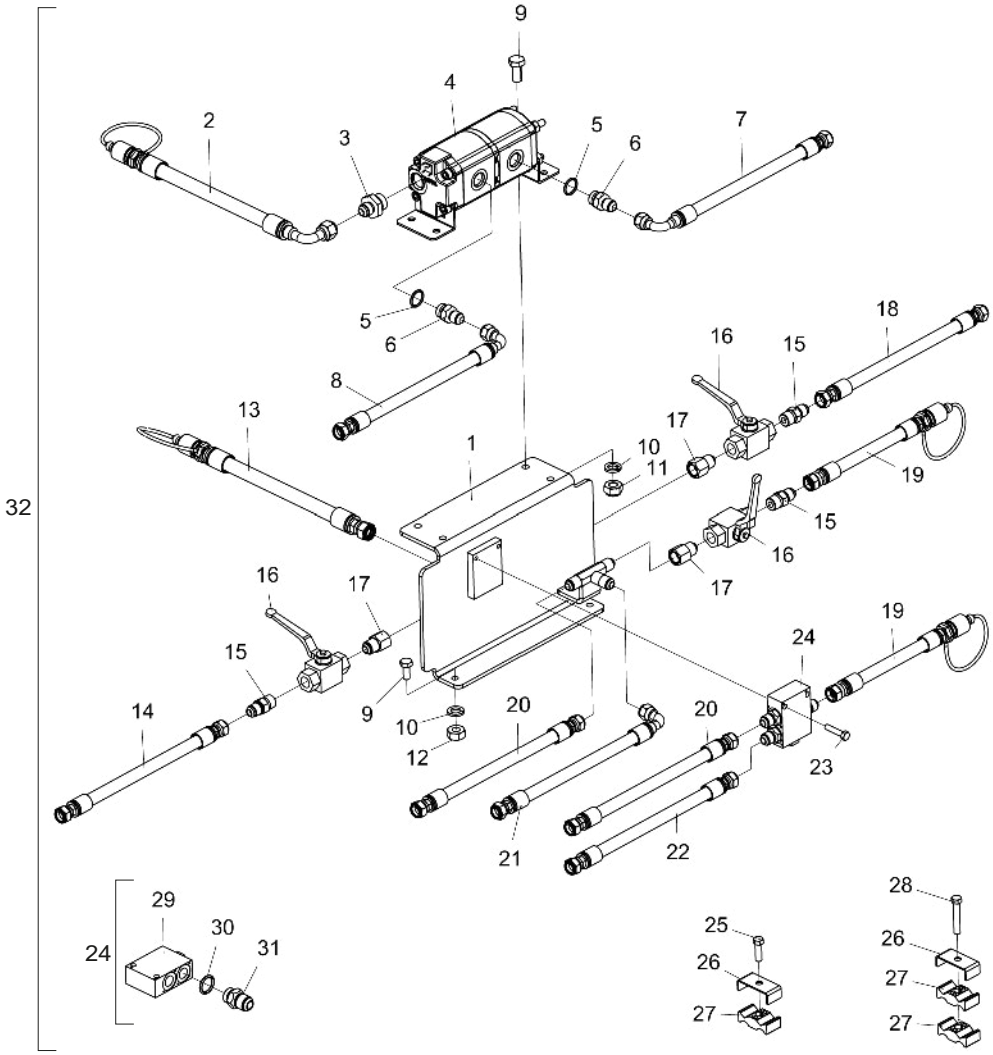

Item	Code	Product description	All	5000	6000
1	5530017193-0	Hydraulic System Support	1		
2	5372011592-8	Hose Ø1/2″W/ 1Trf and 1Tcg 4000mm W/Male Quick Coupling	1		
3	6020270120-8	Nipple Mf.3/4″Bsp-Or C/Cn Reb Hex X Mf.1/2″Bsp Jic Comp.44,70mm	1		
4	6020430283-1	Rotating Flow Divider Valve Of Gears Pld20/2/Cs-Od/16-Oc//16-Oc/Cd-Od (02014753) Casappa	1		
5	6020010060-6	O´Ring 6-040 N3006-90Nbr (18,00)	2		
6	5412010088-5	Nipple R.7/8" Unf X R.3/4" Unf X 47mm With Hexagonal 1"	2		
7	5372011580-4	Hose Ø3/8″W/1Trg and 1Tcg 3400mm		1	
7	5372011581-2	Hose Ø3/8″W/1Trg and 1Tcg 3700mm			1
8	5372011574-0	Hose Ø3/8″W/1Trg and 1Tcg 2100mm		1	
8	5372011575-8	Hose Ø3/8″W/1Trg and 1Tcg 2400mm			1
9	6020310452-1	Hexagonal Head Bolt M10 X 1,50 X 25mm Cl8.8 Rt(Bichromated)	6		
10	6020010394-0	Pressure Washer M10 Media (Bichromated)	6		
11	6020317435-0	Self-Locking Nut With Nylon M10 X 1,50 Ma Cl8 Ch.17mm H.10,00mm	4		
12	6020310822-5	Hexagonal Nut M10 X 1,50 Ma Cl8 Ch.17mm H.8,00mm (Bichromated)	2		
13	5372011590-1	Hose Ø1/2″W/ 1Trg and 1Trf 4000mm W/Male Quick Coupling	1		
14	5372011586-3	Hose Ø3/8″W/2Trg 2100mm		1	
14	5372011587-1	Hose Ø3/8″W/2Trg 2400mm			1
15	5412010099-0	Nipple R.1/2" Npt X R.3/4" Unf X 50mm With Hexagonal 7/8"	3		
16	6020430194-0	Sphere Valve 1/2" Npt Stauff:Bbvm20080200M / Gemels 1111Ab-Ge2Ggt35011A000	3		
17	5412010104-0	Nipple R.1/2"(G) X 3/4" Unf X 45mm With Hexagonal 1"	3		
18	5372011588-0	Hose Ø3/8″W/2Trg 3400mm		1	
18	5372011589-8	Hose Ø3/8″W/2Trg 3700mm			1
19	5372011174-4	Hose Ø3/8″X 7000mm W/1Trg and 1Trf W/Male Quick Coupling	2		
20	5372011907-9	Hose Ø3/8″W/2Trg 900mm	2		
21	5372011676-2	Hose Ø3/8″W/1Trg and 1Tcg 3200mm	1		
22	5372011790-4	Hose Ø3/8″W/2Trg 3100mm	1		
23	6020311017-3	Hexagonal Head Bolt 5/16" X 1.1/2" 18F Unc Gr2 Rt(Bichromated)	2		
24	5224010106-8	Oil Distributor	1		
25	6020310026-7	Hexagonal Head Bolt 3/8" X 1.1/4" 16F Unc1A Gr5 Rt(Bichromated)	3		
26	6020015973-2	Plate Clamp	5		
27	6020010723-6	Nylon Clamp For Pipe And Hose (Pá-5X1)	7		
28	6020310991-4	Hexagonal Head Bolt 3/8" X 2.1/4" 16F Unc Gr5 Rt(Bichromated)	2		
29	6020430204-1	Flow Divider Valve Hfb030731 - Hydraulic Designer	1		
30	6020010022-3	O´Ring 2-114 N3006-90Nbr (15,54)	3		
31	5412010035-4	Nipple R.3/4" Unf X R.3/4" Unf X 38mm With Hexagonal 7/8"	3		
32	5528011059-0	Hydraulic System SKADI 5000 Without Row Marker For Lateral Transport		1	
32	5528011058-1	Hydraulic System SKADI 6000 Without Row Marker For Lateral Transport			1

• Hydraulic System With Row Marker 5000/6000

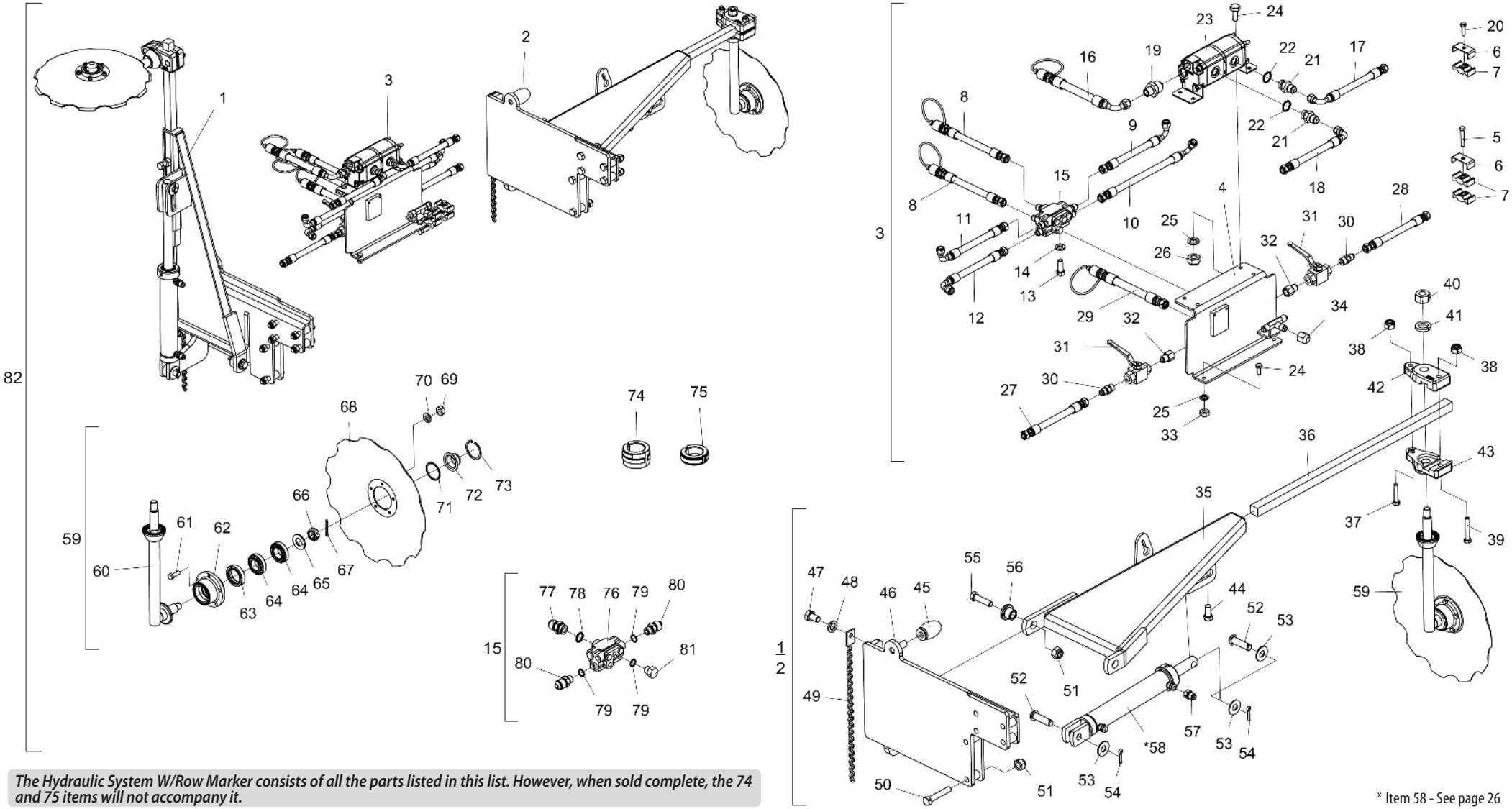

The Hydraulic System W/Row Marker consists of all the parts listed in this list. However, when sold complete, the 74 and 75 items will not accompany it.

* Item 58 - See page 26

• Table Hydraulic System With Row Marker 5000/6000

Item	Code	Product description	All	5000	6000
1	5386010220-6	Complete Left Row Marker	1		
2	5386010219-2	Complete Right Row Marker Solog-5000	1		
3	5528010990-7	Hydraulic System Skadi 25 Linhas For Row Marker		1	
3	5528011040-9	Hydraulic System Skadi 29 Linhas For Row Marker			1
4	5530017193-0	Hydraulic System Support	1		
5	6020310991-4	Hexagonal Head Bolt 3/8" X 2.1/4" 16F Unc Gr5 Rt	3		
6	6020015973-2	Plate Clamp	5		
7	6020010723-6	Clamp (Ag3)	8		
8	5372011591-0	Hose Ø3/8″W/ 1Trg and 1Trf 4000mm W/Male Quick Coupling	2		
9	5372011583-9	Hose Ø3/8″W/1Trg and 1Tcg 4200mm		1	
9	5372011585-5	Hose Ø3/8″W/1Trg and 1Tcg 4500mm			1
10	5372011582-0	Hose Ø3/8″W/1Trg and 1Tcg 4100mm		1	
10	5372011584-7	Hose Ø3/8″W/1Trg and 1Tcg 4400mm			1
11	5372011577-4	Hose Ø3/8″W/1Trg and 1Tcg 3000mm		1	
11	5372011579-0	Hose Ø3/8″W/1Trg and 1Tcg 3300mm			1
12	5372011576-6	Hose Ø3/8″W/1Trg and 1Tcg 2800mm		1	
12	5372011578-2	Hose Ø3/8″W/1Trg and 1Tcg 3100mm			1
13	6020310021-6	Hexagonal Head Bolt 3/8" X 1" 16F Unc1A Gr5 Rt	2		
14	6020010406-7	Pressure Washer 3/8" Media Industry	2		
15	5224010016-9	Complete Oil Distributor With 6 Nipples	1		
16	5372011592-8	Hose Ø1/2″W/ 1Trf and 1Tcg 4000mm W/Male Quick Coupling	1		
17	5372011580-4	Hose Ø3/8″W/1Trg and 1Tcg 3400mm		1	
17	5372011581-2	Hose Ø3/8″W/1Trg and 1Tcg 3700mm			1
18	5372011574-0	Hose Ø3/8″W/1Trg and 1Tcg 2100mm		1	
18	5372011575-8	Hose Ø3/8″W/1Trg and 1Tcg 2400mm			1
19	6020270120-8	Nipple Mf.3/4″Bsp-Or C/Cn Reb Hex X Mf.1/2″Bsp Jic Comp.44,70mm	1		
20	6020310026-7	Hexagonal Head Bolt 3/8" X 1.1/4" 16F Unc1A Gr5 Rt	2		
21	5412010088-5	Nipple R.7/8" Unf X R.3/4" Unf X 47mm With Hexagonal 1"	2		
22	6020010060-6	O´Ring 6-040 N3006-90Nbr (18,00)	2		
23	6020430283-1	Rotating Flow Divider Valve Of Gears Pld20/2/Cs-Od/16-Oc/16-	1		
24	6020310452-1	Hexagonal Head Bolt M10 X 1,50 X 25mm Cl8.8 Rt	6		
25	6020010394-0	Pressure Washer M10 Media	6		
26	6020317435-0	Self-Locking Nut With Nylon M10 X 1,50 Ma Cl8 Ch.17mm H.10,00mm	4		
27	5372011586-3	Hose Ø3/8″W/2Trg 2100mm		1	
27	5372011587-1	Hose Ø3/8″W/2Trg 2400mm			1
28	5372011588-0	Hose Ø3/8″W/2Trg 3400mm		1	
28	5372011589-8	Hose Ø3/8″W/2Trg 3700mm			1
29	5372011590-1	Hose Ø1/2″W/ 1Trg and 1Trf 4000mm W/Male Quick Coupling	1		
30	5412010099-0	Nipple R.1/2" Npt X R.3/4" Unf X 50mm With Hexagonal 7/8"	2		
31	6020430194-0	Sphere Valve 1/2" Npt Stauff:Bbvm20080200M / Gemels 1111Ab-	2		
32	5412010104-0	Nipple R.1/2"(G) X 3/4" Unf X 45mm With Hexagonal 1"	2		
33	6020310822-5	Hexagonal Nut M10 X 1,50 Ma Cl8 Ch.17mm H.8,00mm	2		
34	5538010158-0	Cover Of Nipple R.3/4" Unf	3		
35	5036010094-1	Left Row Marker Of Front Marker	1		
35	5036010095-0	Right Row Marker Of Front Marker	1		
36	5040080019-4	Square Bar De 1.1/8" X 830mm	2		
37	6020310210-3	Hexagonal Head Bolt M12 X 1,75 X 60mm Cl8.8 Rt	2		
38	6020310847-0	Self-Locking Nut With Nylon M12 X 1 ,75 Ma Cl8 Ch.19mm H.12,00mm	4		

Item	Code	Product description	All	5000	6000
39	6020317411-2	Hexagonal Head Bolt M12 X 1,75 X 75mm Cl8.8 Rt	2		
40	6020310770-9	Hexagonal Nut 3/4" 10F Unc Gr5 Ch.1.7/32" Height 18,50mm	2		
41	6020010414-8	Pressure Washer 3/4" Media Industry	2		
42	6010601393-7	Lower Rosette Of Row Marker	2		
43	6010601392-9	Upper Rosette Of Row Marker	2		
44	6020312082-9	Hexagonal Head Bolt 5/8" X 1.1/2" 11F Unc1A Gr5 Rt	2		
45	6020030170-9	Absorver Shock	2		
46	5530016465-9	Fixation Left Support	1		
46	5530016464-0	Right Support of Row Marker	1		
47	6020310071-2	Hexagonal Head Bolt M12 X 1,75 X 20mm Cl8.8 Rt	2		
48	6020010395-8	Pressure Washer M12 Media	2		
49	5192010046-9	Complete Chain De 05,5mm 510mm Cpl	2		
50	6020317420-1	Hexagonal Head Bolt M16 X 2,00 X 90mm Cl8.8 Rp	12		
51	6020317443-0	Self-Locking Nut With Nylon M16 X 2,00 Ma Cl8 Ch.24mm H.16,00mm	16		
52	6020310597-8	Pin Ø3/4″X 62mm	4		
53	5024010142-1	Smooth Washer Ø20,3 X Ø46,5 X 3,00mm	6		
54	6020050104-0	Cotterpin 3/16" X 1"	4		
55	6020310075-5	Hexagonal Head Bolt M16 X 2,00 X 65mm Cl8.8 Rp	4		
56	5080010407-3	Bushing Of Ø16,2 X Ø1.1/2" X 24mm	4		
57	5412010130-0	Reduction Nipple R.3/4" Unf X R.3/4" Unf X 35mm Hexagonal 7/8" With Hole Ø1/16"	4		
*58	6020055698-7	Hydraulic Cylinder "O.D" Ø1.1/4" X Ø2" X 246mm(Course) X 499mm(Closed)	2		
59	5386010139-0	Row Marker	1		
59	5386010138-2	Row Marker	1		
60	5386010141-2	Row Marker	1		
60	5386010142-0	Row Marker	1		
61	6020310038-0	Hexagonal Head Bolt 5/16" X 1" 18F Unc1A Gr5 Rt	10		
62	5204010247-7	Disc Hub	2		
63	6020350268-3	Retainer Ø36,00 X Ø52,00 X 11,00mm	2		
64	6020350077-0	Bearing 44610/49	4		
65	5024010258-4	Smooth Washer Ø20 X Ø38,5 X 3,00mm	2		
66	6020310797-0	Nut 3/4" 16F Unf Gr5 Ch.1.1/16" Height 13,00mm	2		
67	6020050101-5	Cotterpin 1/8" X 1"	2		
68	2759366580-7	Concave Notched Disc Blade 16 X 3,50 Hc Rd 74mm + 5H Rd 8,7mm R=48mm Single Bevel	2		
69	6020310744-0	Hexagonal Nut 5/16" 18F Unc Gr5 Ch.1/2" Height 6,50mm	10		
70	6020010404-0	Pressure Washer 5/16" Media Industry	10		
71	6020010130-0	Gascket Ring 050 X 057 X 2mm	2		
72	6020050649-1	Hub Cap (External Diameter 57,00mm)	2		
73	6020011025-3	Retaining Ring I-058	2		
74	5348050012-8	Complete Limiter Of Ø51 X 49,5mm	2		
75	5348050015-2	Complete Limiter Of Ø51 X 25mm	2		
76	6020430196-7	Valve Block	1		
77	5412010035-4	Nipple R.3/4" Unf X R.3/4" Unf X 38mm With Hexagonal 7/8"	2		
78	6020010022-3	O´Ring 2-114 N3006-90Nbr (15,54)	2		
79	6020010025-8	O´Ring 6-091 N3006-90Nbr(Ø12,00 X 2,00mm)	6		
80	5412010008-7	Nipple R.3/4" Unf X R.9/16" Unf X 40mm With Hexagonal 3/4"	4		
81	5081010006-8	Plug Ø9/16" X 22mm	2		
82	5528011062-0	Hydraulic System SKADI 5000 W/ Row Marker		1	
82	5528011061-1	Hydraulic System SKADI 6000 W/ Row Marker			1

• Hydraulic System With Row Marker For Lateral Transport

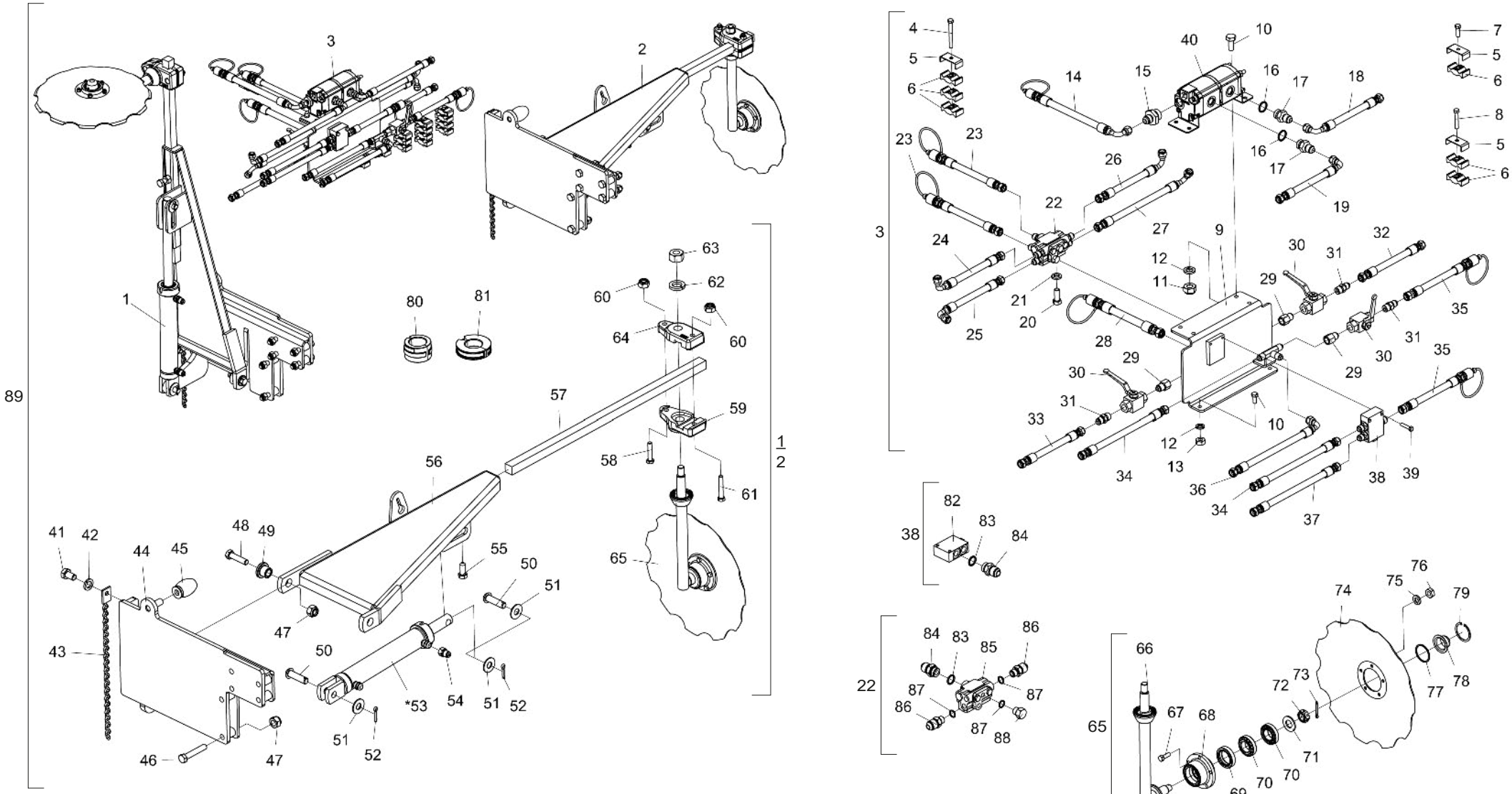

The Hydraulic System W/Row Marker for Lateral Transport consists of all the parts listed in this list. However, when sold complete, the 80 and 81 items will not accompany it.

* Item 53 - See page 26

• Table Hydraulic System With Row Marker For Lateral Transport

Item	Code	Product description	All	5000	6000	7000
1	5386010220-6	Complete Left Row Marker	1			
2	5386010219-2	Complete Right Row Marker	1			
3	5528011060-3	Hydraulic System Skadi 5000 For Row Marker For Lateral Transport		1		
3	5528011056-5	Hydraulic System Skadi 6000 For Row Marker For Lateral Transport			1	
3	5528011084-0	Hydraulic System Skadi 7000 For Row Marker For Lateral Transport				1
4	6020311028-9	Hexagonal Head Bolt 3/8" X 3.1/2" 16F Unc1A Gr2 Rp	2			
5	6020015973-2	Plate Clamp	7			
6	6020010723-6	Nylon Clamp For Pipe And Hose (Pa-5X1)	12			
7	6020310026-7	Hexagonal Head Bolt 3/8" X 1.1/4" 16F Unc1A Gr5 Rt	4			
8	6020310991-4	Hexagonal Head Bolt 3/8" X 2.1/4" 16F Unc Gr5 Rt	1			
9	5530017193-0	Hydraulic System Support	1			
10	6020310452-1	Hexagonal Head Bolt M10 X 1,50 X 25mm Cl8.8 Rt	6			
11	6020317435-0	Self-Locking Nut With Nylon M10 X 1,50 Ma Cl8 Ch.17mm H.10,00mm	4			
12	6020010394-0	Pressure Washer M10 Media	6			
13	6020310822-5	Hexagonal Nut M10 X 1,50 Ma Cl8 Ch.17mm H.8,00mm	2			
14	5372011592-8	Hose Ø1/2"W/ 1Trf and 1Tcg 4000mm W/Male Quick Coupling	1			
15	6020270120-8	Nipple Mf.3/4" Bsp-Or C/Cn Reb Hex X Mf.1/2" Bsp Jic Comp.44,70mm	1			
16	6020010060-6	O´Ring 6-040 N3006-90Nbr (18,00)	2			
17	5412010088-5	Nipple R.7/8" Unf X R.3/4" Unf X 47mm With Hexagonal 1"	2			
18	5372011580-4	Hose Ø3/8"W/1Trg and 1Tcg 3400mm		1		
18	5372011581-2	Hose Ø3/8"W/1Trg and 1Tcg 3700mm			1	
18	5372011582-0	Hose Ø3/8"W/1Trg and 1Tcg 4100mm				1
19	5372011574-0	Hose Ø3/8"W/1Trg and 1Tcg 2100mm		1		
19	5372011575-8	Hose Ø3/8"W/1Trg and 1Tcg 2400mm			1	
19	5372011576-6	Hose Ø3/8"W/1Trg and 1Tcg 2800mm				1
20	6020310021-6	Hexagonal Head Bolt 3/8" X 1" 16F Unc1A Gr5 Rt	2			
21	6020010406-7	Pressure Washer 3/8" Media Industry	2			
22	5224010016-9	Complete Oil Distributor With 6 Nipples	1			
23	5372011591-0	Hose Ø3/8"W/ 1Trg and 1Trf 4000mm W/Male Quick Coupling	2			
24	5372011577-4	Hose Ø3/8"W/1Trg and 1Tcg 3000mm		1		
24	5372011579-0	Hose Ø3/8"W/1Trg and 1Tcg 3300mm			1	
24	5372011581-2	Hose Ø3/8"W/1Trg and 1Tcg 3700mm				1
25	5372011576-6	Hose Ø3/8"W/1Trg and 1Tcg 2800mm		1		
25	5372011578-2	Hose Ø3/8"W/1Trg and 1Tcg 3100mm			1	
25	5372011677-0	Hose Ø3/8"W/1Trg and 1Tcg 3500mm				1
26	5372011583-9	Hose Ø3/8"W/1Trg and 1Tcg 4200mm		1		
26	5372011585-5	Hose Ø3/8"W/1Trg and 1Tcg 4500mm			1	
26	5372011686-0	Hose Ø3/8"W/1Trg and 1Tcg 4900mm				1
27	5372011582-0	Hose Ø3/8"W/1Trg and 1Tcg 4100mm		1		
27	5372011584-7	Hose Ø3/8"W/1Trg and 1Tcg 4400mm			1	
27	5372011685-1	Hose Ø3/8"W/1Trg and 1Tcg 4800mm				1
28	5372011590-1	Hose Ø1/2"W/ 1Trg and 1Trf 4000mm W/Male Quick Coupling	1			
29	5412010104-0	Nipple R.1/2"(G) X 3/4" Unf X 45mm With Hexagonal 1"	3			
30	6020430194-0	Sphere Valve 1/2" Npt Stauff:Bbvm20080200M / Gemels 1111Ab-Ge2Ggt35011A000	3			
31	5412010099-0	Nipple R.1/2" Npt X R.3/4" Unf X 50mm With Hexagonal 7/8"	3			
32	5372011588-0	Hose Ø3/8"W/2Trg 3400mm		1		
32	5372011589-8	Hose Ø3/8"W/2Trg 3700mm			1	
32	5372011797-1	Hose Ø3/8"W/2Trg 4200mm				1
33	5372011586-3	Hose Ø3/8"W/2Trg 2100mm		1		
33	5372011587-1	Hose Ø3/8"W/2Trg 2400mm			1	
33	5372011788-2	Hose Ø3/8"W/2Trg 2800mm				1
34	5372011907-9	Hose Ø3/8"W/2Trg 900mm	2			
35	5372011174-4	Hose Ø3/8"X 7000mm W/1Trg and 1Trf W/Male Quick Coupling	2			
36	5372011676-2	Hose Ø3/8"W/1Trg and 1Tcg 3200mm	1			
37	5372011790-4	Hose Ø3/8"W/2Trg 3100mm	1			
38	5224010106-8	Oil Distributor	1			
39	6020311017-3	Hexagonal Head Bolt 5/16" X 1.1/2" 18F Unc Gr2 Rt	2			

Item	Code	Product description	All	5000	6000	7000
40	6020430283-1	Rotating Flow Divider Valve Of Gears Pld20/2/Cs-Od/16-Oc/16-Oc/Cd-Od (02014753) Casappa	1			
41	6020310071-2	Hexagonal Head Bolt M12 X 1,75 X 20mm Cl8.8 Rt	2			
42	6020010395-8	Pressure Washer M12 Media	2			
43	5192010046-9	Complete Chain De 05,5mm 510mm Cpl	2			
44	5530016464-0	Right Support of Row Marker	1			
44	5530016465-9	Left Support of Row Marker	1			
45	6020030170-9	Absorver Shock	2			
46	6020317420-1	Hexagonal Head Bolt M16 X 2,00 X 90mm Cl8.8 Rp	12			
47	6020317443-0	Self-Locking Nut With Nylon M16 X 2,00 Ma Cl8 Ch.24mm H.16,00mm	16			
48	6020310075-5	Hexagonal Head Bolt M16 X 2,00 X 65mm Cl8.8 Rp	4			
49	5080010407-3	Bushing Of Ø16,2 X Ø1.1/2" X 24mm	4			
50	6020310597-8	Pin Ø3/4"X 62mm	4			
51	5024010142-1	Smooth Washer Ø20,3 X Ø46,5 X 3,00mm	6			
52	6020050104-0	Cotterpin 3/16" X 1"	4			
*53	6020055698-7	Hydraulic Cylinder "O.D" Ø1.1/4" X Ø2" X 246mm(Course) X 499mm(Closed)	2			
54	5412010130-0	Reduction Nipple R.3/4" Unf X R.3/4" Unf X 35mm Hexagonal 7/8" With Hole Ø1/16"	4			
55	6020312082-9	Hexagonal Head Bolt 5/8" X 1.1/2" 11F Unc1A Gr5 Rt	2			
56	5036010095-0	Right Row Marker Of Front Marker	1			
56	5036010094-1	Left Row Marker Of Front Marker	1			
57	5040080019-4	Square Bar De 1.1/8" X 830mm	2			
58	6020310210-3	Hexagonal Head Bolt M12 X 1,75 X 60mm Cl8.8 Rt	2			
59	6010601392-9	Upper Rosette Of Row Marker	2			
60	6020310847-0	Self-Locking Nut With Nylon M12 X 1 ,75 Ma Cl8 Ch.19mm H.12,00mm	4			
61	6020317411-2	Hexagonal Head Bolt M12 X 1,75 X 75mm Cl8.8 Rt	2			
62	6020010414-8	Pressure Washer 3/4" Media Industry	2			
63	6020310770-9	Hexagonal Nut 3/4" 10F Unc Gr5 Ch.1.7/32" Height 18,50mm	2			
64	6010601393-7	Lower Rosette Of Row Marker	2			
65	5386010138-2	Complete Right Upper Line Marker	1			
65	5386010139-0	Complete Left Upper Line Marker	1			
66	5386010142-0	Right Row Marker	1			
66	5386010141-2	Left Row Marker	1			
67	6020310038-0	Hexagonal Head Bolt 5/16" X 1" 18F Unc1A Gr5 Rt	10			
68	5204010247-7	Disc Hub	2			
69	6020350268-3	Retainer Ø36,00 X Ø52,00 X 11,00mm	2			
70	6020350077-0	Bearing 44610/49	4			
71	5024010258-4	Smooth Washer Ø20 X Ø38,5 X 3,00mm	2			
72	6020310797-0	Nut 3/4" 16F Unf Gr5 Ch.1.1/16" Height 13,00mm	2			
73	6020050101-5	Cotterpin 1/8" X 1"	2			
74	2759366580-7	Concave Notched Disc Blade 16 X 3,50 Hc Rd 74mm + 5H Rd 8,7mm R=48mm Single Bevel	2			
75	6020010404-0	Pressure Washer 5/16" Media Industry	10			
76	6020310744-0	Hexagonal Nut 5/16" 18F Unc Gr5 Ch.1/2" Height 6,50mm	10			
77	6020010130-0	Gascket Ring 050 X 057 X 2mm	2			
78	6020050649-1	Hub Cap (External Diameter 57,00mm)	2			
79	6020011025-3	Retaining Ring I-058 G502-058-01	2			
80	5348050012-8	Complete Limiter Of Ø51 X 49,5mm	2			
81	5348050015-2	Complete Limiter Of Ø51 X 25mm	2			
82	6020430204-1	Flow Divider Valve Hfb030731 - Hydraulic Designer	1			
83	6020010022-3	O´Ring 2-114 N3006-90Nbr (15,54)	5			
84	5412010035-4	Nipple R.3/4" Unf X R.3/4" Unf X 38mm With Hexagonal 7/8"	5			
85	6020430196-7	Valve Block	1			
86	5412010008-7	Nipple R.3/4" Unf X R.9/16" Unf X 40mm With Hexagonal 3/4"	4			
87	6020010025-8	O´Ring 6-091 N3006-90Nbr(Ø12,00 X 2,00mm)	6			
88	5081010006-8	Plug Ø9/16" X 22mm	2			
89	5528011063-8	Hydraulic System Skadi 5000 W/Row Marker For Lateral Transport		1		
89	5528011057-3	Hydraulic System Skadi 6000 W/Row Marker For Lateral Transport			1	
89	5528011083-2	Hydraulic System Skadi 7000 W/Row Marker For Lateral Transport				1

• Row Marker Cylinder

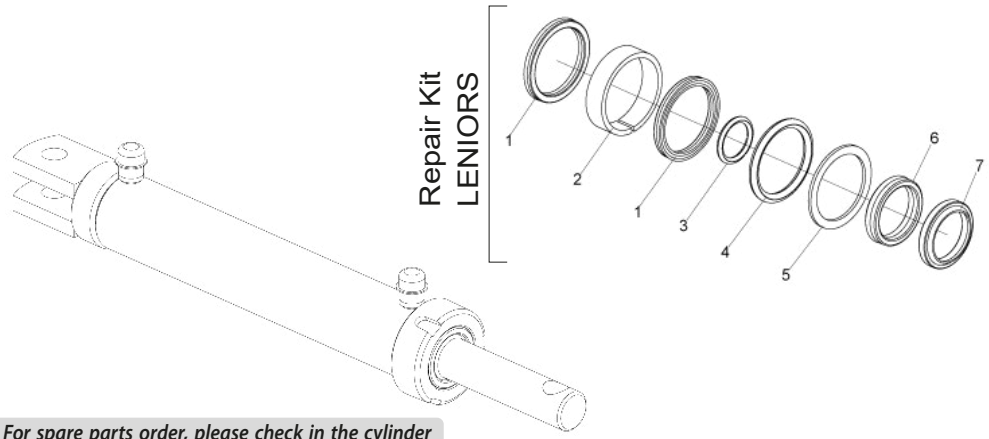

Item	Code	Product description	All
		Repair Kit LENIORS	
1	J003567	Gasket Std 1870-1625	2
2		Guide Ring W2-2000-500 (Ø2" x 1/2")	1
3		O´Ring 2-126 (Ø21,82 x Ø3,53mm)	1
4		O´Ring 2-326 (Ø40,64 x Ø5,33mm)	1
5		Parback 8-326	1
6		Gasket B 1870-1250-312B	1
7		Cleaner D-1250 (1-1/4" x 1-5/8" x 3/16")	1
-	6020190184-0	Repair Kit Leniors J003567	1

For spare parts order, please check in the cylinder jacket (1), the following: - Baldan part number with 11 numbers, the manufacturer code, name and manufacturer date.

• ETD Electronic Table Support- Optional

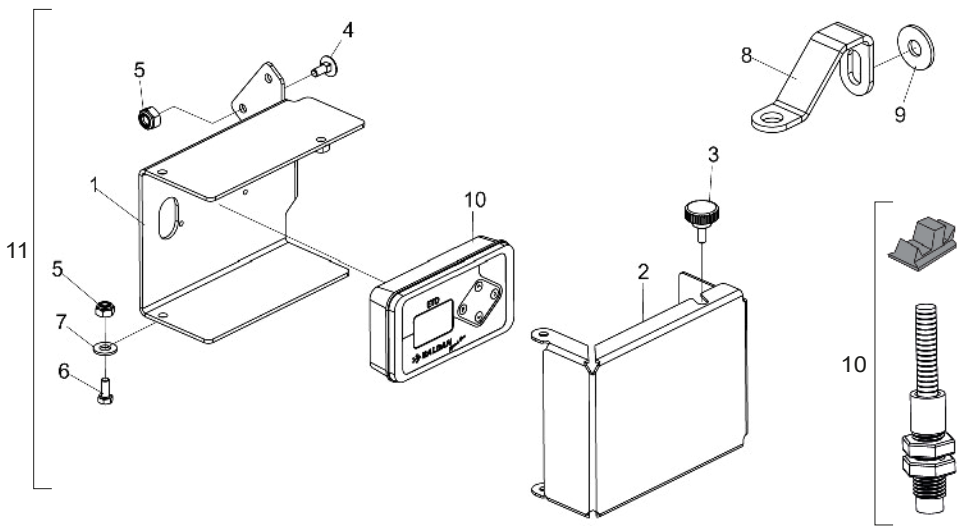

Item	Code	Product description	All
1	5530017727-0	Fixation Support	1
2	5136018495-5	Protection Plate	1
3	6020030001-0	Male Aperto Button "Thermoplastic" (R.1/4" Unc X 15mm)	1
4	6020317455-4	French Head Bolt M6 X 1,00 X 16mm Cl8.8 Rp	2
5	6020317442-2	Self-Locking Nut With Nylon Low M6 X 1,00 Ma Cl8 Ch.10mm H.6,00mm	4
6	6020310291-0	Hexagonal Head Bolt M6 X 1,00 X 15mm Cl8.8 Rt	2
7	6020010431-8	Plain Inox Washer Ø8,5 X Ø18 X 1,8mm	2
8	5530017709-2	Sensor Hall Etd Support	1
9	5024010068-9	Smooth Washer Ø13,3 X Ø35,5 X 3,00mm	1
10	6020395116-0	Electronic Dosing Table Etd Baldan Speed Box(303315023)	1
11	5530017726-2	Support for Dosing Electronic Table	1

• Row W/Fertilizer and Seed Double Disc W/Depth Regulator (Large Wheel)

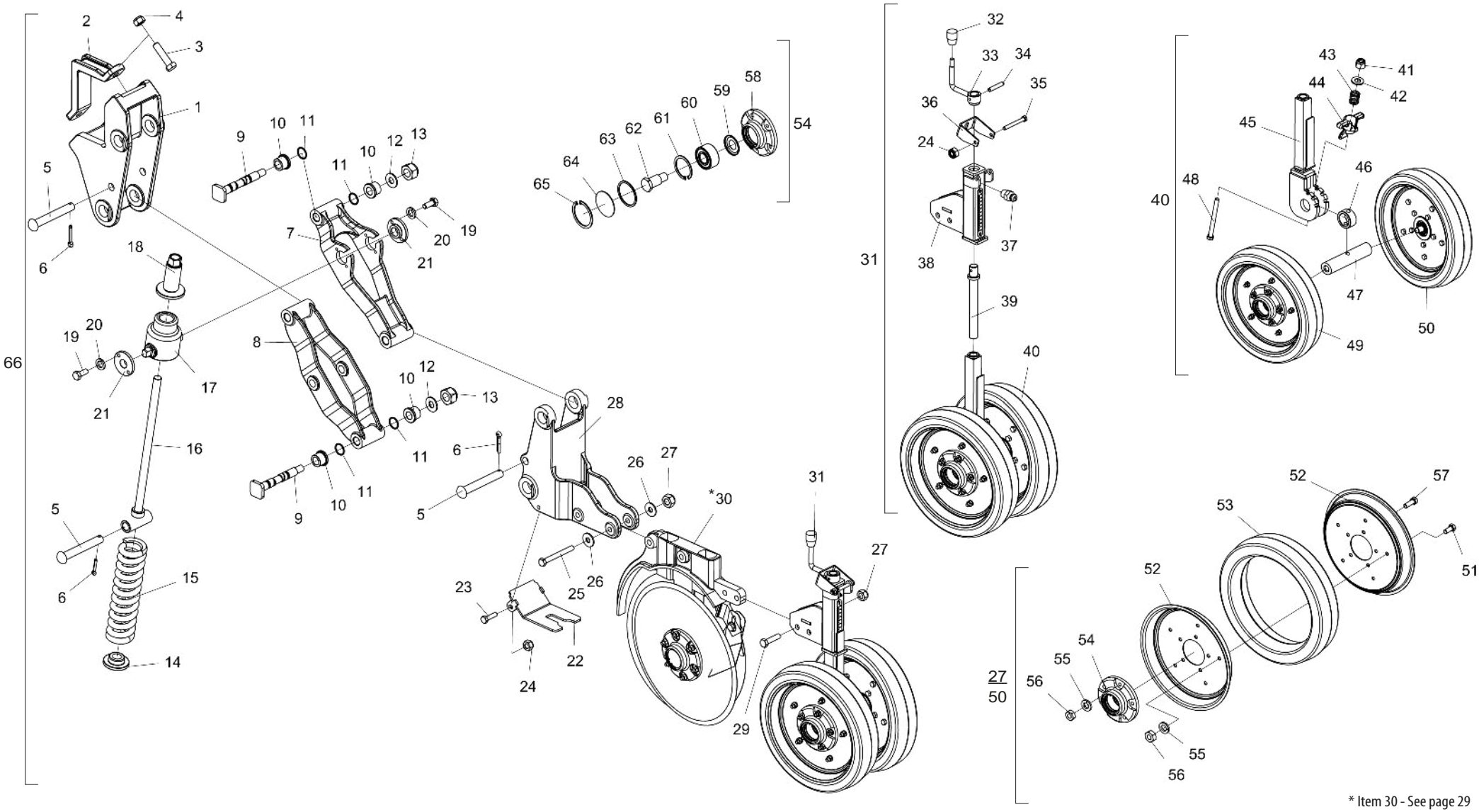

BALDAN

• Table Row W/Fertilizer and Seed Double Disc W/Depth Regulator (Large Wheel)

Item	Code	Product description	All	Right	Left
1	5530018054-9	Fixation Support			
2	6010602810-1	Clamp For Tube Of 100 X 125mm	1		
3	6020310075-5	Hexagonal Head Bolt M16 X 2,00 X 65mm Cl8.8 Rp	2		
4	6020317443-0	Self-Locking Nut With Nylon M16 X 2,00 Ma Cl8 Ch.24mm H.16,00mm	2		
5	6020310968-0	Pin Ø3/4" X 132mm	3		
6	6020050113-9	Cotterpin 1/4" X 1.1/4"	3		
7	5072011831-6	Upper Arm			
8	5072011830-8	Lower Arm			
9	6020317583-6	Fixation Pin			
10	5080012061-3	Internal Bushing			
11	6020015832-9	O´Ring 2-017 N3006-90Nbr (Ø17,17 X Ø1,78mm)	8		
12	5024010239-8	Smooth Washer Ø16,5 X Ø37 X 3,00mm	4		
13	6020317523-2	Self-Locking Nut With Nylon M16 X 1,50 Mb Cl8 Ch.24mm H.16,00mm	4		
14	6010600980-8	Back Bushing	1		
15	6020251949-3	Helicoidal Compression Spring Ø42 X Ø71 X 273Mmm (Pace 24,5mm)	1		
16	5566010341-3	Spring Rod of Row	1		
17	5530017798-0	Spring Support	1		
18	5484010188-9	Spring Regulator	1		
19	6020311269-9	Hexagonal Head Bolt M8 X 1,25 X 20mm Cl8.8 Rt	4		
20	6020010004-5	Pressure Washer M8 Media	4		
21	6020030715-4	Articulation Bushing Of Spring Rod	2		
22	5464010668-1	Complete Protection of Double Disc	1		
23	6020317477-5	Hexagonal Head Bolt M8 X 1,25 X 30mm Cl8.8 Rt	2		
24	6020317449-0	Self-Locking Nut With Nylon Low M8 X 1,25 Ma Cl8 Ch.13mm H.8,00mm	2		
25	6020311249-4	Hexagonal Head Bolt M12 X 1,75 X 110mm Cl10,9 Rp	2		
26	5024010068-9	Smooth Washer Ø13,3 X Ø35,5 X 3,00mm	4		
27	6020310847-0	Self-Locking Nut With Nylon M12 X 1 ,75 Ma Cl8 Ch.19mm H.12,00mm	4		
28	5530018053-0	Fixation Support of Double Disc Row			
29	6020310184-0	Hexagonal Head Bolt M12 X 1,75 X 50mm Cl8.8 Rp	2		
*30	5124010831-7	Complete Row Of Double Disc Fertilizer/Seed (Excentric) Special		1	
*30	5124010832-5	Left Row Of Fertilizer/Seed Double Disc (Excentric) Special			1
31	5498010285-0	Complete Depth Control Wheel	1		
32	6020430203-3	Handle Pma 330 Thread 3/8" X 16 Fios	1		
33	5530016441-1	Adjustment Support	1		
34	6020310508-0	Heavy Elastic Pin Ø8 X 40mm	1		
35	6020310568-4	Hexagonal Head Bolt M8 X 1,25 X 70mm Cl8.8 Rp	1		
36	5136017335-0	Lock Plate of Depth Wheel	1		
37	6020130100-1	Grease Fitting 1/4"	1		
38	5530016439-0	Support Of Compactation Wheel	1		
39	5232012055-1	Regulating Shaft	1		
40	5498010286-9	Complete Depth Control Wheel	1		
41	6020310840-3	Self-Locking Nut With Nylon 3/8" 16F Unc Gr5 Ch.9/16" H.12,00mm	1		
42	5024010466-8	Smooth Washer Ø10,3 X Ø20 X 2,00mm	1		
43	6020250577-8	Helical Spring Ø12,5 X Ø16,5 X 19mm	1		
44	6010602640-0	Handle Of Compactation Wheel	1		
45	5530016440-3	Depth Wheel Support	1		

Item	Code	Product description	All	Right	Left
46	5080011312-9	Regulator Bushing Of Depth Wheel	1		
47	5232012112-4	Shaft Ø1.1/4" X 150mm	1		
48	6020312205-8	Hexagonal Head Bolt 3/8" X 4.1/2" 16F Unc1A Gr5 Rp	1		
49	5498010288-5	Small Wheel Depth Control	1		
50	5498010287-7	Small Wheel Depth Control	1		
51	6020312020-9	Hexagonal Head Bolt 5/16" X 3/4" 18F Unc1A Gr5 Rt	5		
52	6020010823-2	Convex Rubber Wheel Rim	2		
53	6020010824-0	Convex Rubber Compactation Rim	1		
54	5204010527-1	Left Wheel Hub	1		
54	5204010526-3	Right Wheel Hub	1		
55	6020010404-0	Pressure Washer 5/16" Media Industry	10		
56	6020310744-0	Hexagonal Nut 5/16" 18F Unc Gr5 Ch.1/2" Height 6,50mm	10		
57	6020310038-0	Hexagonal Head Bolt 5/16" X 1" 18F Unc1A Gr5 Rt	5		
58	5204010528-0	Hub Ø123 X 47mm	1		
59	6020056005-4	Dual Ball Races Bearing Cap 5204Kp52-Sp6 (1ºline)	1		
60	6020350933-5	Sphere Bearing Double Row 5204Kp52-Sp6(1º Line)	1		
61	6020011053-9	Retaining Ring I-047	1		
62	5420010108-4	Hexagonal Head Bolt 3/4" X 1.7/8" 16F Unf 1A Gr5 Rp - Read Left (Special)	1		
62	5420010109-2	Hexagonal Head Bolt 3/4" X 1.7/8" 16F Unf 1A Gr5 Rp - Read Left (Special)	1		
63	6020010095-9	Gascket Ring 047X 052X 2mm	1		
64	5096010050-3	Hub Cap	1		
65	6020010289-7	Retaining Ring I-55	1		
66	2517012538-2	Right Row W/Fertilizer and Seed Double Disc W/Depth Regulator	1		
66	2517012539-0	Left Row W/Fertilizer and Seed Double Disc W/Depth Regulator	1		

• Fertilizer and Seed Double Disc Row

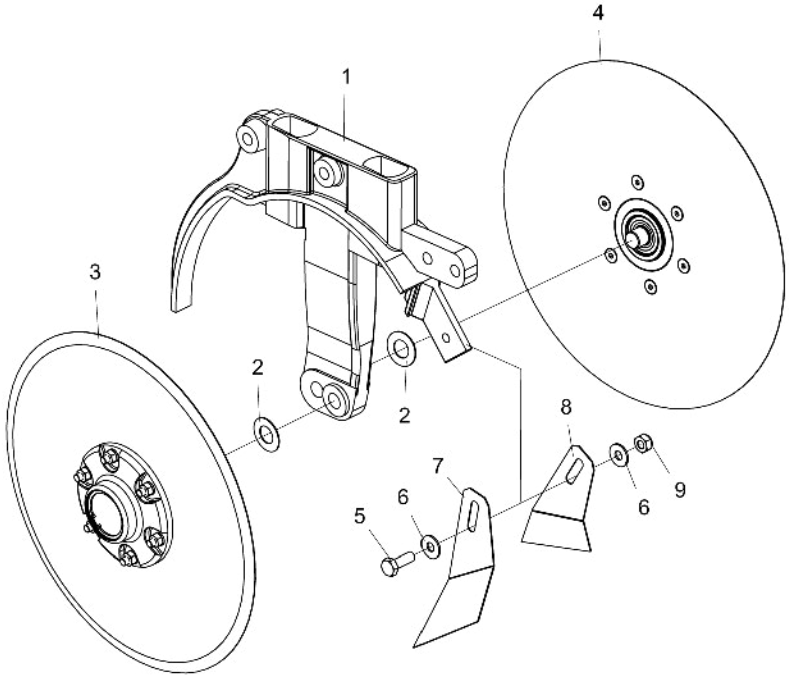

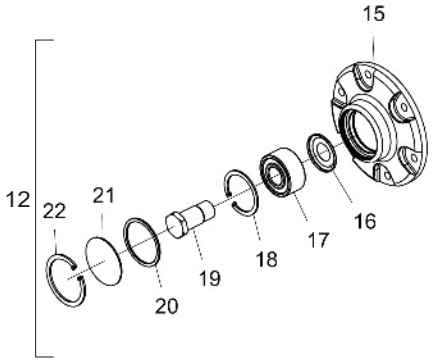

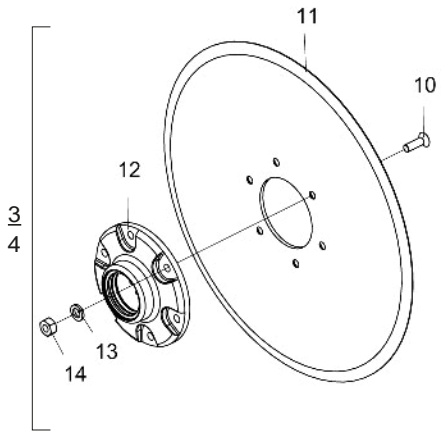

Item	Code	Product description	All	Right	Left
1	5530017893-5	Right Support of Double Disc		1	
1	5530017894-3	Left Support of Double Disc			1
2	5024010024-7	Smooth Washer Ø20 X Ø38 X 1,21mm	6		
3	5204010459-3	Complete Left Hub (Plain Disc 15" X 4,00mm)	1		
4	5204010458-5	Complete Right Hub (Coulter Disc Blade 15" X 4,00mm)	1		
5	6020317475-9	Hexagonal Head Bolt M10 X 1,50 X 30mm Cl8.8 Rt	1		
6	5024010075-1	Smooth Washer Ø10,3 X Ø25 X 2,00mm	2		
7	5352030056-9	Internal Left Scraper Of Disc	1		
8	5352030057-7	Internal Right Scraper Of Disc	1		
9	6020317435-0	Self-Locking Nut With Nylon M10 X 1,50 Ma Cl8 Ch.17mm H.10,00mm	1		
10	6020317573-9	Allen Bolt M8 X 1,25 X 25mm Cl12.9 RT	6		
11	2857397276-9	Coulter Plain Disc Blade 15 X 4,00 Hc Rd 80mm + 6H Rd 8,7mm D=115mm Single Bevel	1		
12	5204010451-8	Right Disc Hub	1		
12	5204010452-6	Left Disc Hub	1		
13	6020010004-5	Pressure Washer M8 Media	6		
14	6020310454-8	Hexagonal Nut M8 X 1,25 Ma Cl8 Ch.13mm H.6,50mm	6		
15	5204010453-4	Hub Of Ø136 X 41mm	1		
16	6020056005-4	Dual Ball Races Bearing Cap 5204Kp52-Sp6 (1°line)	1		
17	6020350933-5	Sphere Bearing Double Row 5204Kp52-Sp6(1° Line)	1		
18	6020011053-9	Retaining Ring I-047	1		
19	5420010098-3	Hexagonal Head Bolt 3/4" X 1.7/8" 16F Unf 1A Gr5 Rp - Read Right (Special)	1		
19	5420010099-1	Hexagonal Head Bolt 3/4" X 1.7/8" 16F Unf 1A Gr5 Rp - Read Left (Special)	1		
20	6020010095-9	Gascket Ring 047X 052X 2mm	1		
21	5096010050-3	Hub Cap	1		
22	6020010289-7	Retaining Ring I-55	1		

• Lateral Transport - Optional

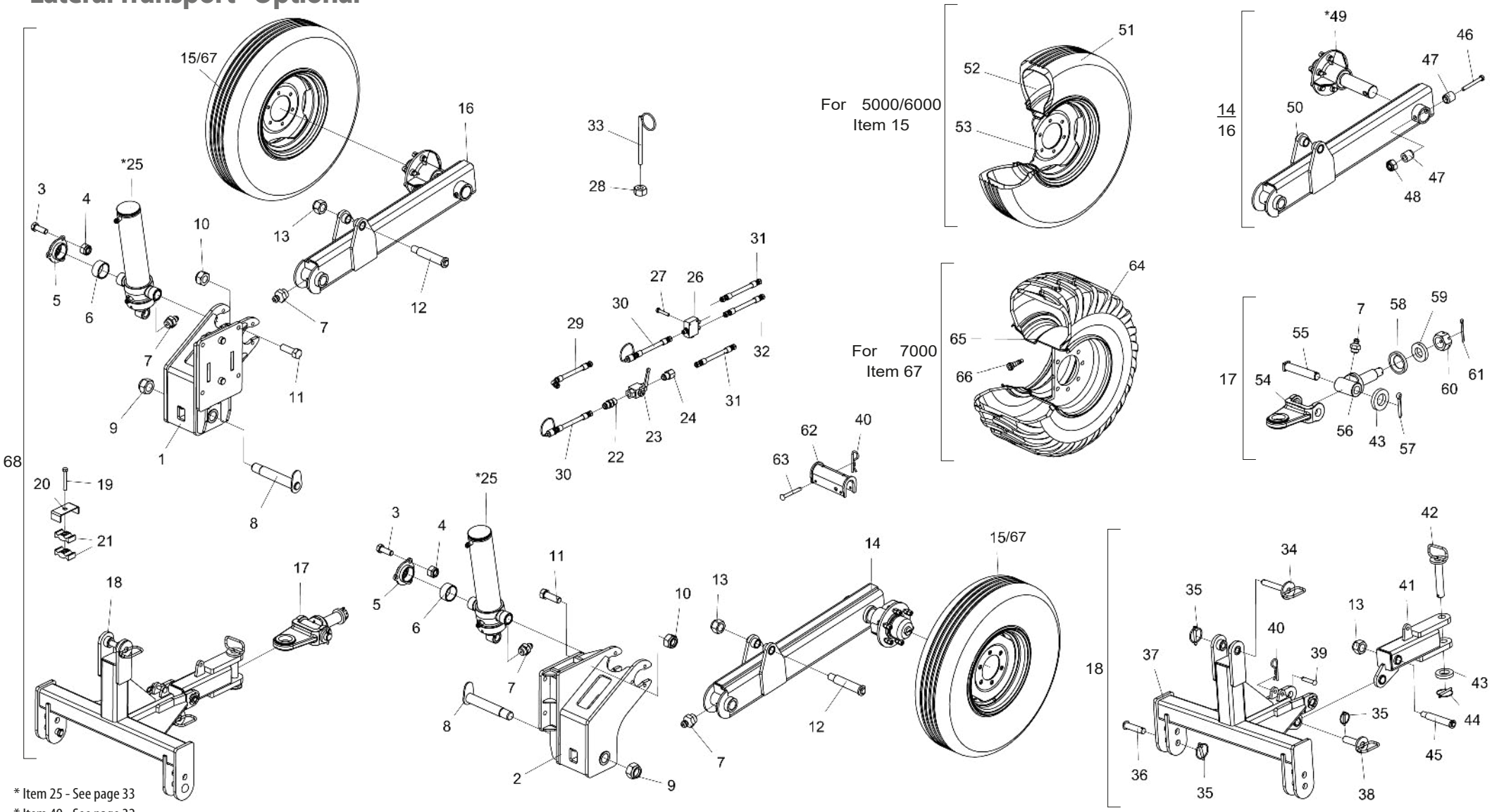

* Item 25 - See page 33
* Item 49 - See page 32

• Table Lateral Transport - Optional

Item	Code	Product description	All	5000/6000	7000
1	5530017806-4	Right Lateral Support	1		
2	5530017805-6	Front Support	1		
3	6020311270-2	Hexagonal Head Bolt M16 X 2,00 X 45mm Cl8.8 Rt	12		
4	6020317443-0	Self-Locking Nut With Nylon M16 X 2,00 Ma Cl8 Ch.24mm H.16,00mm	12		
5	5284010041-3	Flange Of Piston Support	4		
6	5080010389-1	Flange Bronze Bushing	4		
7	6020130108-7	Grease Fitting 1/8"	6		
8	5432010697-7	Pin Of Ø45,3 X 224mm Complete	2		
9	6020311268-0	Self-Locking Nut With Nylon M42 X 4,50 Ma Cl8 Ch.65mm H.42,00mm	2		
10	6020310837-3	Self-Locking Nut With Nylon M20 X 2,50 Ma Cl8 Ch.30mm H.18,70mm	8		
11	6020310372-0	Hexagonal Head Bolt M20 X 2,50 X 60mm Cl8.8 RP	8		
12	5432010696-9	Pin Ø1.1/4" X 133mm	2		
13	6020312505-7	Self-Locking Nut With Nylon Upper M25 X 1,50 Ma Cl8 Ch.38mm H.28,00mm	4		
14	5530016446-2	Complete Left Support Of Wheel		1	
14	5530018050-6	Left Support of Wheel			1
15	5498100007-5	Complete Wheel 900 X 17		2	
16	5530016450-0	Complete Right Support Of Wheel		1	
16	5530018049-2	Complete Right Support			1
17	5332010084-0	Complete Hitch Shackle	1		
18	5084010278-2	Lateral Transport Drawbar	1		
19	6020310991-4	Hexagonal Head Bolt 3/8" X 2.1/4" 16F Unc Gr5 Rt	21		
20	6020015973-2	Plate Clamp	21		
21	6020010723-6	Nylon Clamp For Pipe And Hose (Pa-5X1)	3		
22	5412010099-0	Nipple R.1/2" Npt X R.3/4" Unf X 50mm With Hexagonal 7/8"	1		
23	6020430194-0	Sphere Valve 1/2" Npt Stauff:Bbvm20080200M / Gemels 1111Ab-	1		
24	5412010104-0	Nipple R.1/2"(G) X 3/4" Unf X 45mm With Hexagonal 1"	1		
*25	6020058401-8	Hydraulic Cylinder "O.D" Ø2" X Ø4" X 285mm(C) X 148,6mm(F)	2		
26	5224010106-8	Oil Distributor	1		
27	6020311017-3	Hexagonal Head Bolt 5/16" X 1.1/2" 18F Unc Gr2 Rt	2		
28	6020310760-1	Hexagonal Nut 5/8" 11F Unc Gr5 Ch.1.1/16" Height 15,00mm	1		
29	5372011676-2	Hose Ø3/8"W/1Trg and 1Tcg 3200mm	1		
30	5372011174-4	Hose Ø3/8" X 7000mm W/1Trg and 1Trf W/Male Quick Coupling	2		
31	5372011907-9	Hose Ø3/8"W/2Trg 900mm	2		
32	5372011790-4	Hose Ø3/8"W/2Trg 3100mm	1		
33	5530017804-8	Hoses Support	1		
34	5432010421-4	Pin Ø1" X 150mm	1		
35	6020390293-2	Lock Ø5,75 X 40mm	4		
36	6020310660-5	Pin Ø28 x 105mm	2		
37	5084010334-7	Hitch Drawbar Lift	1		
38	5432010489-3	Pin Ø1.1/4" X 102mm	1		
39	5432010128-2	French Head Pin Ø5/8" X 75mm	1		
40	6020390308-4	Lock Nma - Type "R" Ø4,5 X 80mm	3		
41	5530018113-8	Articulation Support Drawbar	1		
42	5432010920-8	Pin Ø1.3/4" X 177mm	1		
43	5024010129-4	Smooth Washer Ø46 X Ø81 X 12,50mm	1		

Item	Code	Product description	All	5000/6000	7000
44	6020390919-8	Lock Ø8 X 65mm	1		
45	5432010917-8	Complete Pin Ø1.1/4" X 186mm	1		
46	6020317451-1	Hexagonal Head Bolt M12 X 1,75 X 100mm Cl8.8 Rp	2		
47	5080011709-4	Guide Bushing	4		
48	6020310847-0	Self-Locking Nut With Nylon M12 X 1 ,75 Ma Cl8 Ch.19mm H.12,00mm	2		
*49	5204010515-8	Spare Hub		2	
*49	5232012419-0	Complete Wheel Shaft			2
50	5530016445-4	Left Support Of Wheel		1	
50	5530018069-7	Left Support of Platform 1230mm			1
50	5530016449-7	Right Support of Wheel		1	
50	5530018068-9	Right Support of Wheel 1230mm			1
51	6020310408-4	Tyre 900 X 16 X 10 Ply		2	
52	6020050362-0	Inner Tube Pa 15/16		2	
53	6020350402-3	Rim 5,5" X 16" 16.392		2	
54	5530018130-8	Support Type "U" Of Shackle	1		
55	5432040003-4	Square Head Pin Ø37,5 X 190mm	1		
56	5252010197-7	External Hitch Of Shackle	1		
57	6020050122-8	Cotterpin 3/8" X 2.1/2"	1		
58	5024010635-0	Washer De Ø52,6 X Ø87 X 12,00mm	1		
59	5024010332-7	Smooth Washer Ø39 X Ø75 X 12,50mm	1		
60	6020310857-8	Nut 1.1/2" 12F Unf Gr2 Ch.2" Height 30,00mm	1		
61	6020050118-0	Cotterpin 1/4" X 2.1/2"	1		
62	5558010548-2	Cylinder Lock	1		
63	6020310462-9	French Head Pin Ø9,8 X 80mm	2		
64	6020310415-7	Tyre 400/60 15.5/14 Traction			2
65	6020015935-0	Ring Ag 13,00 X 15,50			2
66	6020410040-6	Tyre Valve Tr-618 A			2
67	5498010283-4	Mounted Right Wheel 18" X 9" W/Tire 10.5/80-18(10 Lonas) At 603 Bkt			1
67	5498010284-2	Mounted Left Wheel 18" X 9" W/Tire 10.5/80-18(10 Lonas) At 603 Bkt			1
68	SISTRANLASKADI	Semi-Hidraulic Lateral Transport - SKADI 5000/6000 - Derivation 0010		-	
68	SISTRANLASKADI	Semi-Hidraulic Lateral Transport - SKADI 7000 - Derivation 0020			-

• Hub - Skadi 5000/6000

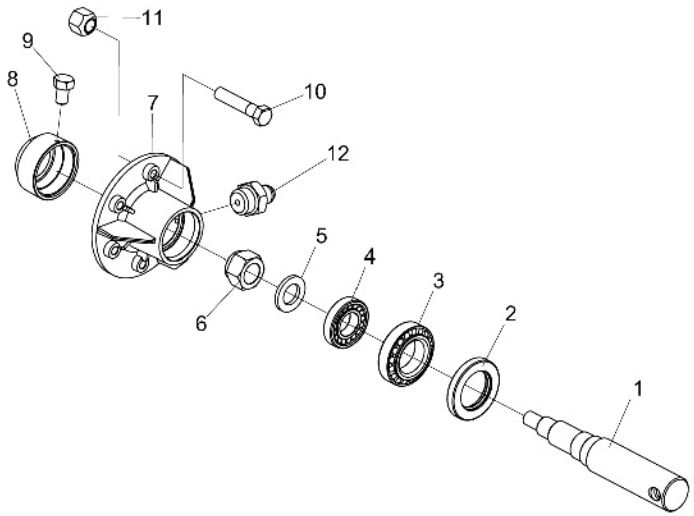

Item	Code	Product description	All
1	5232012057-8	Shaft Of 2.1/2" X 333mm	2
2	6020350224-1	Retainer Ø55,00 X Ø90,00 X 12,50mm	2
3	6020350056-7	Bearing 32210	2
4	6020350080-0	Bearing 30207	2
5	5024010039-5	Smooth Washer Ø26,2 X Ø44 X 4,75mm	2
6	6020312505-7	Self-Locking Nut With Nylon Upper M25 X 1,50 Ma Cl8 Ch.38mm H.28,00mm	1
7	5204010063-6	Wheel Hub (Spare)	2
8	5096020004-4	Wheel Hub Cap	2
9	6020311020-3	Hexagonal Head Bolt 5/16" X 1/2" 18F Unc1A Gr2 Rt	2
10	6020310297-9	Hexagonal Head Bolt 9/16" X 2.3/4" 18F Unf1A Gr5 Rp	12
11	6020310816-0	Double Conic Hexagonal Nut Of Wheel 9/16" 18F Unf Gr5 Ch.7/8" Height 19,00mm	24
12	6020130108-7	Grease Fitting 1/8"	1

• Wheel Shaft - Skadi 7000

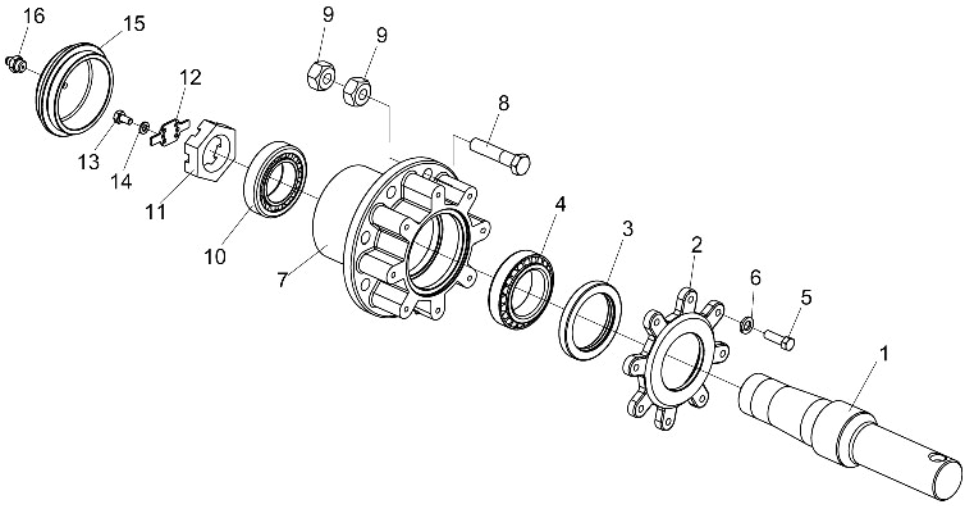

Item	Code	Product description	All
1	5232012420-4	Wheel Shaft	1
2	5284010174-6	Wheel Hub Flange	1
3	6020350280-2	Retainer Ø87,30 X Ø120,80 X 14,30mm	1
4	6020350854-1	Bearing K-33287 / K-33462 (First Line)	1
5	6020310026-7	Hexagonal Head Bolt 3/8" X 1.1/4" 16F Unc1A Gr5 Rt	8
6	6020010406-7	Pressure Washer 3/8" Media Industry	8
7	5204010470-4	Wheel Hub	1
8	6020310056-9	Hexagonal Head Bolt 3/4" X 3.1/2" 16F Unf1A Gr5 Rp	8
9	6020310803-9	Conic Hexagonal Nut 3/4" 16F Unf Gr5 Ch.1.1/2" Height 22,00mm	16
10	6020350855-0	Bearing K-3982 / K-3920 (First Line)	1
11	5456020010-5	Nut 2.1/2" 12F	1
12	5558010080-4	Lock(Large)	1
13	6020311000-9	Hexagonal Head Bolt 1/4" X 1/2" 20F Unc1A Gr5 Rt	2
14	6020010402-4	Pressure Washer 1/4" Media Industry	2
15	5096010051-1	Hub Cap	1
16	6020130108-7	Grease Fitting 1/8"	2

• Lateral Transport Cylinder

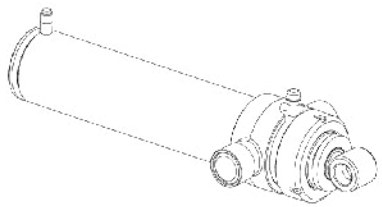

For spare parts order, please check in the cylinder jacket (1), the following: - Baldan part number with 11 numbers, the manufacturer code, name and manufacturer date.

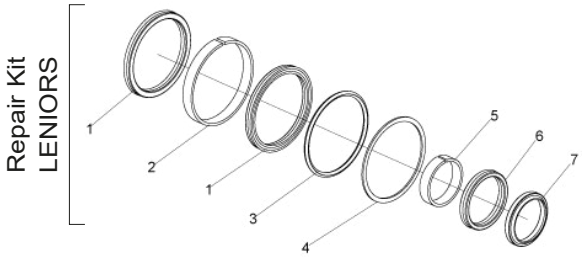

Item	Code	Product description	All
		Repair Kit LENIORS	
1	J007389	Gasket Std 3120-3375 (Ø3.3/8" x Ø 4" x 5/16")	2
2		Guide Ring W2-4000-500 (Ø4" x 1/2")	1
3		O´Ring 2-342 (Ø91,44 x Ø5,33mm)	1
4		Parback 8-342	1
5		Guide Ring W2-2250-500 (Ø2.1/4" x 1/2")	1
6		Gasket B 2500-2000-375B (Ø2xØ2-1-2x3-8)	1
7		Cleaner D-2000	1
-	6020190207-2	Repair Kit Leniors J007389	1

• Stickers

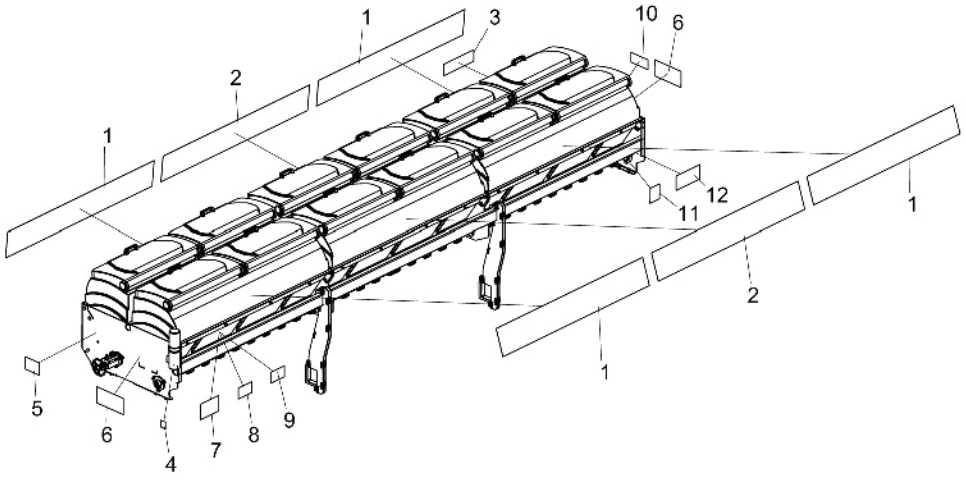

Item	Code	Product description	All	5000	6000	7000
1	6020072117-1	Sticker Skadi 5000(230 X 1380mm)		4		
1	6020078879-9	Sticker Skadi 6000(230 X 1552mm)			4	
1	6020079043-2	Sticker Skadi 7000(230 X 1820mm)				4
2	6020072118-0	Sticker Baldan(230 X 1550mm)		2		
2	6020078880-2	Sticker Baldan(230 X 1830mm)			2	2
3	6020071650-0	Sticker Seed Distribution Table SPDEA (100 X 335mm)	1			
3	6020079013-0	Sticker Fertilizer Distributor Table Skadi 20/31 Teeths Spring 2"(205 X 270mm)	1			
3	6020079014-9	Sticker Fertilizer Distributor Table Skadi 31/20 Teeths Spring 2"(205 X 270mm)	1			
4	5206010221-0	Sticker Instruction Manual Warning (100 X 160mm)	1			
5	5206010309-7	Sticker Platform Warning (107 X 145mm)	1			
6	6020072154-6	Sticker Logotype Baldan	2			
7	5206010304-6	Sticker Change Of Oil For Speed Box(135 X 200mm)	1			
8	5206010308-9	Sticker Hydraulic Hoses Warning(150 X 95mm)	1			
9	5206010310-0	Sticker Disc Warning (150 X 95mm)	1			
10	5206010311-9	Sticker Row Marker Warning (180 X 100mm)	1			
11	5206010278-3	Sticker For Cleaning The Fertilizer Hopper (105 X 130mm)	1			
12	5206010285-6	Sticker Speed Box Transmission System (125 X 265mm)	1			

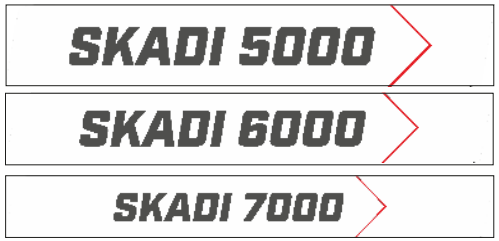

Itens 1 e 3

Item 2

Item 4

Item 5

Item 6

Item 7

Item 8

Item 9

Item 10

Item 11

Item 12

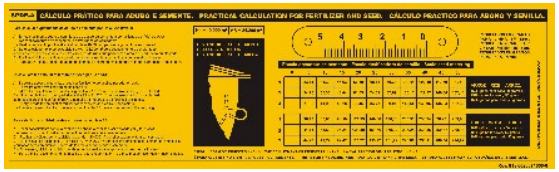

Item 13

• Stickers

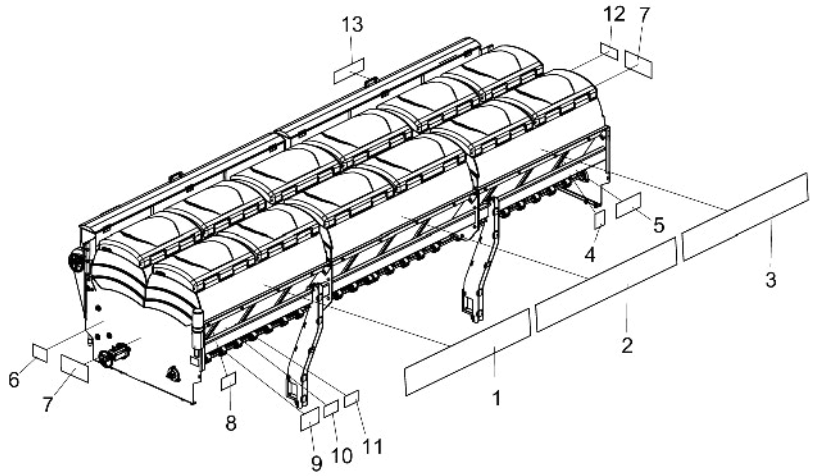

Item	Code	Product description	All	5000	6000
1	6020072117-1	Sticker Skadi 5000(230 X 1380mm)		1	
1	6020078878-0	Sticker Skadi(230 X 1552mm)			1
2	6020072118-0	Sticker Baldan(230 X 1550mm)		1	
2	6020078880-2	Sticker Baldan(230 X 1830mm)			1
3	6020072119-8	Sticker Skadi(230 X 1382mm)		1	
3	6020078879-9	Sticker Skadi 6000(230 X 1552mm)			1
4	5206010278-3	Sticker For Cleaning The Fertilizer Hopper (105 X 130mm)	1		
5	5206010285-6	Sticker Speed Box Transmission System (125 X 265mm)	1		
6	5206010309-7	Sticker Platform Warning (107 X 145mm)	1		
7	6020072154-6	Sticker Logotype Baldan	2		
8	5206010221-0	Sticker Instruction Manual Warning (100 X 160mm)	1		
9	5206010304-6	Sticker Change Of Oil For Speed Box(135 X 200mm)	1		
10	5206010308-9	Sticker Hydraulic Hoses Warning(150 X 95mm)	1		
11	5206010310-0	Sticker Disc Warning (150 X 95mm)	1		
12	5206010311-9	Sticker Row Marker Warning (180 X 100mm)	1		
13	6020071650-0	Sticker Seed Distribution Table SPDEA (100 X 335mm)	1		
13	6020079013-0	Sticker Fertilizer Distributor Table Skadi 20/31 Teeths Spring 2"(205 X 270mm)	1		
13	6020079014-9	Sticker Fertilizer Distributor Table Skadi 31/20 Teeths Spring 2"(205 X 270mm)	1		

Itens 1 e 3

Item 2

Item 4

Item 5

Item 6

Item 7

Item 8

Item 9

Item 10

Item 11

Item 12

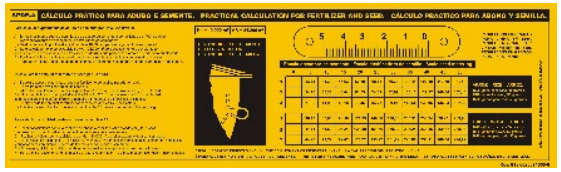

Item 13

• Stickers

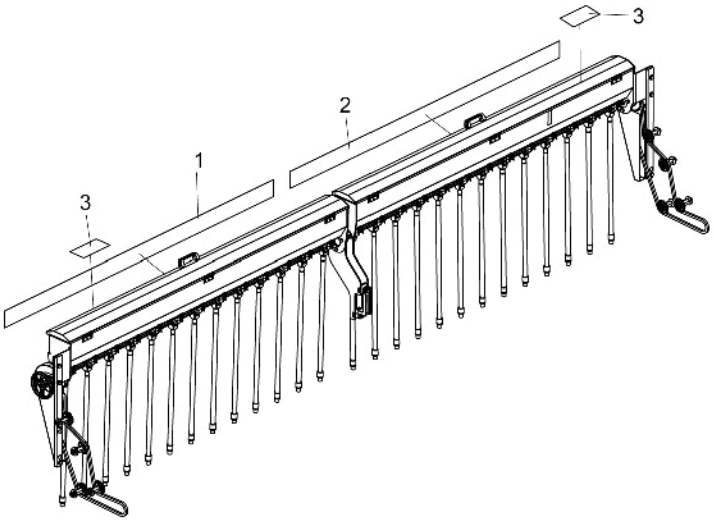

Item	Code	Product description	All	5000	6000
1	6020072120-1	Sticker Skadi Baldan Pasture Seed Hopper (85 X 2040mm)		1	
1	6020078877-2	Sticker Skadi Baldan Pasture Seed Hopper (100 X 2350mm)			1
2	6020072121-0	Sticker Pasture Seed Hopper Baldan Skadi(100 X 2040mm)		1	
2	6020078876-4	Sticker Pasture Seed Hopper Baldan Skadi(100 X 2350mm)			1
3	5206010163-9	Sticker Psture Seed Distribuition Table (100 X 200mm)	2		

SKADI 5000 BALDAN

SKADI 6000 BALDAN

Item 1

SKADI 5000 BALDAN

Item 2

DISTRIBUIÇÃO DE SEMENTES FINAS (KG/HA) COM ESPAÇAMENTO DE 170 MM
PASTURE SEED DISTRIBUTION TABLE (KG/HA) W/ ROW SPACING = 170MM
TABLA DE DISTRIBUCIÓN DE SEMILLAS FINAS (KG/HECTÁREA) CON ESPACIAMIENTO DE 170MM

	TIPO DE CULTURA / SEED TYPE	Número da Escala. Scale. Número de la Escala							
		0,5	1,0	1,5	2,0	2,5	3,0	3,5	4,0
GRAMÍNEAS GRASSES	COLONIÃO	-	2,0	3,5	5,0	7,0	9,0	10,0	11,0
	BRACHIARIA COMUM	-	5,0	7,0	10,0	14,0	17,0	20,0	22,0
	BRACHIARIA BRIZANTE	-	3,0	5,0	7,0	10,0	14,0	17,0	20,0
	PAINÇO	3,0	8,0	14,0	20,0	26,0	32,0	40,0	48,0

	TIPO DE CULTURA / SEED TYPE	Número da Escala. Scale. Número de la Escala							
		0,5	1,0	1,5	2,0	2,5	3,0	3,5	4,0
LEGUMINOSAS LEGUMES	SOJA PERENE	3,5	10,0	17,0	24,0	32,0	41,0	50,0	59,0
	ALFAFA	4,0	12,0	20,0	29,0	38,0	47,0	56,0	65,0
	TREVO	3,6	11,0	18,0	25,0	33,0	42,0	51,0	60,0

Rev. 01 / 5206010163-9

Item 3

• Stickers

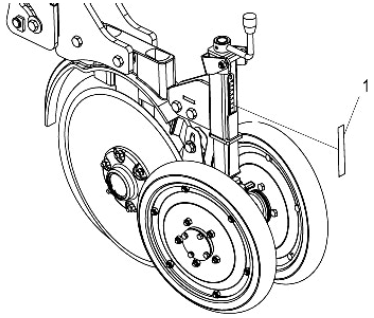

Item 1

Item	Code	Product description	All
1	6020078873-0	Sticker Scale 0 to 10Cm (25 X 135Mm)	1

• Stickers

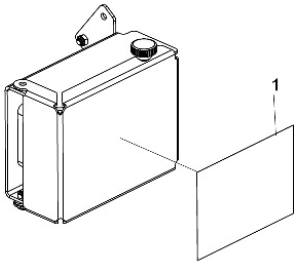

Item 1

Item	Code	Product description	All
1	6020078868-3	Sticker Table Eletrônica De Dosagem(100 X 140mm)	1

• Stickers

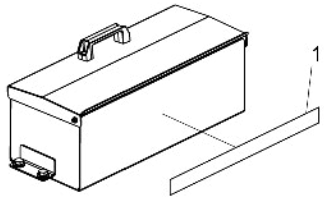

Item 1

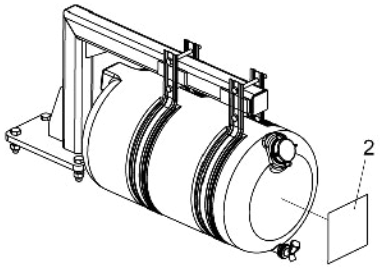

Item 2

Item	Code	Product description	All
1	6020071927-4	Sticker Toolbox (36,52 X 454,98mm)	1
2	6020071926-6	Sticker "Not Drinkable Water" (120 X 120mm)	1

BALDAN

Avenida Baldan, 1500
Nova Matão
15.993-900
Matão/SP - Brasil
sac@baldan.com.br
export@baldan.com.br

+55 16 3221 6500
baldan.com.br