Instruction
Manual

DCFr / DCFc

Lime and Fertilizer Spreader (Gearbox/Belt)

BALDAN

▪ Presentation

We appreciate the preference and would like to congratulate you for excellent choice you just made, since you have acquired a product manufactured with **BALDAN IMPLEMENTOS AGRÍCOLAS S/A** technology**.**

This manual will guide you through the procedures required since its acquisition until operational procedures of usage, safety and maintenance.

BALDAN assures that it has delivered this implement for resale in full and in perfect conditions.

Resale was responsible for the custody and maintenance during the period in its possession, and also for the assembly, retightening, lubrication and overhaul.

During the technical delivery, dealer should guide the user regarding maintenance, safety, their obligations in eventual technical assistance, strict compliance with the warranty term and reading the instructions manual.

Any technical assistance request while in warranty must be made to the dealer from whom you have purchased it.

We reiterate the need for a careful read of the warranty certificate and compliance of all items from this manual, because by doing so you will increase the life of your device.

Instruction Manual

DCFr / DCFc

Lime and Fertilizer Spreader (Gearbox/Belt)

BALDAN IMPLEMENTOS AGRÍCOLAS S/A.
CNPJ: 52.311.347/0009-06
Insc. Est.: 441.016.953.110

Scan the QR Code on the identification plate of your device and access this Instruction Manual online.

BALDAN

Index

BALDAN WARRANTY **07**
GENERAL INFORMATION **08**
To the owner *08*
SAFETY RULES **09**
To the operator ..... *09 - 13*
WARNINGS ..... **14 - 15**
COMPONENTS **16**
DCFr - Lime and fertilizer spreader (Gearbox transmission) *16*
DCFc - Lime and fertilizer spreader (Belt transmission) *17*
DIMENSIONS **18**
DCFr/DCFc 3000/6000/8000 ..... *18*
SPECIFICATIONS **19**
DCFr/DCFc 3000/6000/8000 ..... *19*
ASSEMBLY **20**
Tire assembly *20*
Bucket extension mounting (Optional) *21*
HITCH **22**
Tractor hitch *22*
Support bracket *23*
LEVELLING **24**
Distributor levelling *24*
ADJUSTMENT **25**
TDP cardan coupling *25*
Cardan lenght adjustment ..... *26 - 27*
ADJUSTMENT **28**
Conveyor speed - DCFr *28*
Conveyor speed - DCFc *29*
Conveyor tension *30*
Chain tension *31*
Belt tension *32*
Belt replacement *33*
Shut-off gate adjustment *34*
Vanes position in the power distribution disks *35*
Cardan recommendations *36*
OPERATIONS **37**
Distance between strokes *37*
Overlapping *37*
Recommendations for the operation *38*
General recommendation ..... *38 - 39*

Index

DISTRIBUTION SYSTEM **40**
Dry limestone distribution table - Kg/ha ..... *40 - 42*
CALCULATION **43**
Work speed calculation *43*
Fertilizer dosage calculation per minute *43*
MAINTENANCE **44**
Tires pressure *44*
Lubrication *45*
Lubrication every 5 hours of work *46*
Lubrication every 8 hours of work ..... *47 - 49*
Lubrication every 24 hours of work *50*
Lubrication every 30 hours of work *50*
Lubrication every 60 hours of work *51*
Safety fuse *52*
Gearbox reduction - Oil replacement *53*
Transmission gearbox - Oil replacement *53*
DCFr (Reducer Transmission) reduction gearbox replacement ..... *55 - 57*
DCFc (Belt Transmission) reduction gearbox replacement ..... *58 - 63*
Crow and pinion change (reduction gearbox) ..... *64 - 66*
Operational Maintenance ..... *67 - 68*
Cares *69*
General cleaning ..... *68 - 69*
Distributor preservation ..... *70 - 71*
OPTIONAL **72**
Optional accessories ..... *72 - 73*
IDENTIFICATION **74**
Identification plate *74*
Product identification *75*
NOTES ..... **76 - 77**
CERTIFICATE **78**
Certificate of warranty ..... *78 - 84*

▪ Baldan Warranty

BALDAN IMPLEMENTOS AGRÍCOLAS S/A ensures the dealer normal performance of the implement for a period of six (6) months as of the delivery date on the retail invoice to the first final consumer.

During this period, **BALDAN** undertakes to repair defects in material and/or of manufacture of its liability, including labor, freight and other expenses of the dealer's liability.

In the warranty period, request and replacement of eventual defective parts shall be made to the dealer of the area, who will submit the faulty piece for **BALDAN** analysis.

When this procedure is not possible and the resolving capacity of the dealer is exhausted, the dealer will request the support of **BALDAN** Technical Assistance through a specific form distributed to dealers.

After analyzing the replaced items by **BALDAN** Technical Assistance, and concluding that it is not a warranty, then the dealer will be responsible for the costs related to the replacement; as well as material expenses, travel including accommodation and meals, accessories, lubricant used and other expenses arising from the call out to Technical Assistance, and **BALDAN** company is authorized to carry the respective invoice in the name of the resale.

Any repair carried out in the product within the dealer warranty deadline will only be authorized by **BALDAN** upon previous budget presentation describing parts and workforce to be executed.

The product is excluded from this term if it is repaired or modified by representatives not belonging to the **BALDAN** dealer network, as well as the application of non-genuine parts or components to the user's product.

This warranty is void where it is found that the defect or damage is caused by improper use of the product, failure to follow instructions or inexperience of the operator.

It is agreed that this warranty does not cover tires, polyethylene tanks, cardan shafts, hydraulic components, etc., which are equipment guaranteed by their manufacturers.

Manufacturing and/or material defects, object of this warranty term, will not constitute, under any circumstances, grounds for termination of a purchase agreement, or for indemnification of any nature.

BALDAN reserves the right to change and/or perfect the technical characteristics of its products, without previous notice, and without obligation to proceed in the same way with the products previously manufactured.

General Information

• To the owner

BALDAN IMPLEMENTOS AGRÍCOLAS S/A is not responsible for any damaged caused by accident due to usage, transportation, or in the improper or incorrect transportation of its implement, whether by negligence and/or inexperience of any person.

Only people with complete knowledge of the tractor and the implement should carry their transportation and operation.

BALDAN is not responsible for any damaged caused in unpredictable or unrelated situations to the normal use of the implement.

The incorrect handling of this equipment may result in severe or fatal accidents. Before starting the equipment, carefully read the instructions contained in this manual. Make sure that the person responsible for the operation is instructed as the correct and safe handling. Also make sure that the operator has read and understood the instructions manual of the product.

ATTENTION

NR-31 - SAFETY AND HEALTH AT WORK IN AGRICULTURE, LIVESTOCK FORESTRY, FOREST EXPLORATION AND AQUACULTURE.

The purpose of this Regulatory Standard is to establish the precepts to be observed in the organization and in the work environment, in a manner compatible with the planning and development of agriculture, livestock, forestry and aquaculture activities with the safety and health and environment work environment.

MR. OWNER OR OPERATOR OF THE EQUIPMENT.
Read and carefully comply with provisions of NR-31.

For more information, refer to the site and read in full NR-31.
http://portal.mte.gov.br/legislacao/normas-regulamentadoras-1.htm

▪ Safety Rules

• To the operator

THIS SYMBOL INDICATES IMPORTANT SAFETY WARNING. IN THIS MANUAL, WHENEVER YOU FIND IT, READ THE FOLLOWING MESSAGE CAREFULLY AND PAY ATTENTION TO THE POSSIBILITY OF PERSONAL ACCIDENTS.

ATTENTION

Carefully read the instructions manual to learn about the recommended safety practices.

ATTENTION

Only start to operate the tractor when you are properly seated and with the seat belt locked.

ATTENTION

Do not transport people on the tractor or over the equipment.

ATTENTION

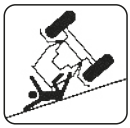

There are risks of severe injuries due to tipping when working in sloped terrains.

ATTENTION

Do not work with the tractor if the front has insufficient ballast to the rear equipment. Should there be a trend to lift, add weights or ballasts to the front or the front wheels.

ATTENTION

Before performing any maintenance in your equipment, make sure it is properly stopped. Avoid being hit.

ATTENTION

Careful when handling DCFr/DCFc support leg since there is risk of accidents.

▪ Safety Rules

ATTENTION FOLLOW ALL RECOMMENDATIONS, WARNINGS AND SAFE PRACTICES RECOMMENDED IN THIS MANUAL, UNDERSTAND THE IMPORTANCE OF YOUR SAFETY. ACCIDENTS CAN CAUSE DISABILITY OR DEATH. REMEMBER, ACCIDENTS CAN BE AVOIDED!

ATTENTION

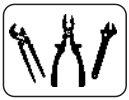

Do not perform adjustments while DCFr/DCFc is running.
When performing any service on DCFr/DCFc, switch off the tractor first. Use appropriate tools.

ATTENTION

Avoid heating parts near the fluid lines.

Heating may generate fragility in the material, rupture and exit of pressurized fluid, causing burns and injuries.

ATTENTION

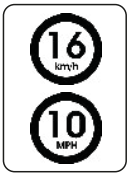

When transporting DCFr/DCFc, do not exceed the 16 km/h or 10 MPH speed, avoiding risk of damages and accidents.

ATTENTION

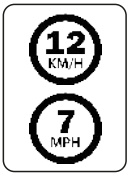

When working with DCFr/DCFc, do not exceed the 12 km/h or 7 MPH speed, avoiding damage and accident risks.

ATTENTION

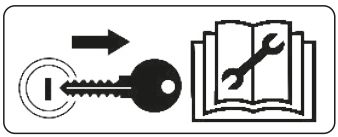

Remove the ignition key before performing any type of maintenance in DCFr/DCFc. Protect yourself against possible injuries or death caused by DCFr/DCFc unexpected start-up.
Do not start up the tractor if DCFr/DCFc is not properly coupled.

ATTENTION

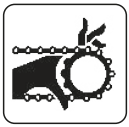

Do not operate DCFr/DCFc if transmission protection is not securely attached. Only remove the protections to replace gears and immediately reinstall them. Do not perform adjustments while DCFr/DC-Fc is in motion.

Safety Rules

ATTENTION

Always maintain places of access and work free of residues such as oil or grease to prevent accidents.

ATTENTION

Before beginning the work or transportation of DCFr/DCFc, check if there are people or blockages close to it.

ATTENTION

Never weld the wheel mounted with tire, the heat may cause air pressure increase and provoke the explosion of the tire.

When filling the tire, position yourself besides the tire, never in front of it. To fill the tire, always use containment device (armor cage).

ATTENTION

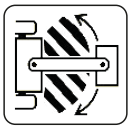

Maintain the articulation area free while DCFr/DCFc is running.

In closed curves, avoid the tractor wheels from touching the head.

ATTENTION

There is risk of possible injuries or death to the DCFr/DCFc operator and audience during operations due to the following reasons:

-Body contact with rotating disks.

-Engagement of the body in the drive shaft and rotary shaft.

ATTENTION

Dispose residues inappropriately affects the environment and the ecology since you will be polluting rivers, canals or the soil.

Inform yourself about the proper way of recycling or disposing residues.

PROTECT THE ENVIRONMENT!

▪ Safety Rules

⚠ ATTENTION

To prevent intoxications, injuries or death when the DCFr/DCFc is running and rotating discs are spinning, proceed in the following manner:

- Stop and turn off the DCFr/DCFc equipment if there are people under 50 meters.
- Do not be exposed to product drift.

- Do not place hands or feet under the rotating discs.

- Never allow people especially children on or under the DCFr/DCFc.

⚠ ATTENTION

DCFr/DCFc can release fragments or release objects at high speeds which can cause serious injury or death to nearby people.

⚠ ATTENTION

Be careful when driving or working with DCFr/DCFc under power lines, low tree branches and other high obstructions, avoiding serious injury or even death.

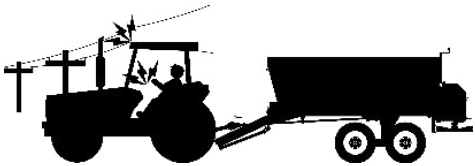

⚠ ATTENTION

Do not get exposed to the air coming out of rotating discs. Use protection.
- During handle and application, use PPE.
- Read the product's label carefully.
- Wash your hands thoroughly after handling the products.
- In case of intoxication due to inhalation or aspiration, keep the person in a ventilated area and immediately seek medical advice, taking the label or the packaging of the product.

INTOXICATION SYMPTOMS:
Weakness, headache, chest pressure, chest tightness, blurred vision, unresponsive pupils, intense salivation, sweating, nausea, vomiting and abdominal cramps.

▪ Safety Rules

• PPE Equipment

ATTENTION **DO NOT WORK WITH DCFr/DCFc WITHOUT WEARING PPE (SAFETY EQUIPMENT). IGNORING THIS WARNING MAY CAUSE DAMAGES TO HEALTH, SEVERE ACCIDENTS OR DEATH.**

When performing certain procedures with the **DCFr/DCFc**, wear the following Safety Equipment (PPE):

IMPORTANT

Safety practice must be performed in all stages of working with DCFr/DCFc, thus avoiding accidents such as impact of objects, fall, noise, cuts and ergonomics, in other words, the person responsible for operating the DCFr/DCFc is subject to internal and external bodily damage.

OBSERVATION **All PPEs (Safety Equipment) should have certificate of authenticity.**

▪ Warnings

⚠ When operating the DCFr/DCFc, do not allow people to stay too close or over it.

⚠ When operating the DCFr/DCFc, observe if there are no people positioned on the throwing line of the distributor discs.

⚠ When performing any maintenance service, use PPEs equipment.

⚠ When conducting any check inside DCFr/DCFc, do no lean on the distributor discs.

⚠ Do not wear very loose clothing as they may get caught in DCFr/DCFc.

⚠ When starting the tractor engine, be properly seated in the operator's seat and aware of complete knowledge of the correct and safe handling of both the tractor and the DCFr / DCFc. Always shift the gear lever to the neutral position, turn off the PTO drive gear and place the hydraulic controls in the neutral position.

⚠ Do not start the motor in a closed environment or with no proper ventilation since the exhaust gases are harmful to health.

⚠ When maneuvering the tractor to couple the DCFR/DCFC, make sure you have the necessary space and that there is no one very close, always maneuver at low gear and be prepared to brake in an emergency.

⚠ Do not perform adjustments while DCFr/DC-Fc is running.

⚠ When working in sloped terrains, proceed with precautions, always trying to maintain the required stability. In case it starts to unbalance, reduce acceleration and turn the wheels of the tractor to the downward face of the terrain and never lift the DCFr/DCFc.

⚠ Always drive the tractor in speeds compatible to the safety, especially during works in bumpy lands or slopes, keep the tractor always engaged.

⚠ When driving the tractor in highways, keep the brake pedals interconnected.

⚠ Do not work with the tractor with light rear. If the rear has a tendency to lift, add more weights on the rear wheels.

⚠ When leaving the tractor, put the shift lever in the neutral position and apply the parking brake. Never leave the DCFr / DCFc on the tractor in the raised position of the hydraulic system.

⚠ All maintenance on the DCFr/DCFc shall be performed with the equipment stopped and with the tractor switched off.

⚠ Do not travel on highways especially at night. Use warning signs throughout the course.

⚠ If it is needed to traffic with DCFr/DCFc on highways, first consult with traffic agencies.

⚠ Do not allow DCFr/DCFc to be used by people who have not been trained, that is, who do not know how to properly operate it.

▪ Warnings

⚠ Do not transport or work with DCFr/DCFc around obstacles, rivers or streams.

⚠ The transportation of people on self-propelled machines and implements is forbidden.

⚠ Changes regarding DCFr/DCFc's original characteristics are not authorized since they may change safety, operation and affect service life.

⚠ Carefully read all safety information herein and in DCFr/DCFc.

⚠ Always check if DCFr/DCFc is in perfect usage conditions. In case of any irregularity that may interfere in DCFr/DCFc operation, arrange due maintenance before any work or transport.

⚠ Maintenance and especially inspection in DCFr/DCFc risk zones should only be performed by trained and qualified worker, respecting all safety guidance. Before beginning maintenance, disconnect all DCFr/DCFc drive systems.

⚠ Periodically check all DCFr/DCFc components before using it.

⚠ Due to the equipment used and work conditions on field or in maintenance areas, precautions are required. Baldan does not have direct control over precautions, therefore, it is the owner's responsibility to put into practice the safety procedures while working with DCFr/DCFc.

⚠ Check the minimum power of the tractor recommended for each model of DCFr/DCFc. Only use tractor with power and ballast compatible with the load and topography of the terrain.

⚠ During DCFr/DCFc transportation, drive in speeds compatible to the terrain and never exceeding 16Km/h, since it reduces maintenance and, therefore, increases DCFr/DCFc service life.

⚠ Do not approach the moving distributors discs.

⚠ Do not stay in the product throwing line.

⚠ Never disengage the DCFr/DCFc with the product in the Bucket. Ignoring this warning can cause risk of tipping over accidents.

⚠ Alcoholic beverage or some medications may cause loss of reflexes and change the operator´s physical conditions. For this reason, never operate the DCFr/DCFc under any of these substances.

⚠ Read or explain all the procedures of this manual to the operator who cannot read.

In case of doubts, refer to Post-Sales.
Telephone: 0800-152577 / E-mail: posvenda@baldan.com.br

▪ Components

• DCFr - Lime and fertilizer spreader (Gearbox transmission)

1. Bucket
2. Deflector
3. Central shaft
4. Central cardan
5. Lateral cardan
6. Hook shackle
7. Support Bracket
8. Conveyor turnbuckle
9. Framework
10. Tire
11. Transmission protection
12. Rotating Disks
13. Adjustable vanes
14. Transmission gearbox
15. Reductor
16. Lever
17. Rear cover
18. Bucket extension

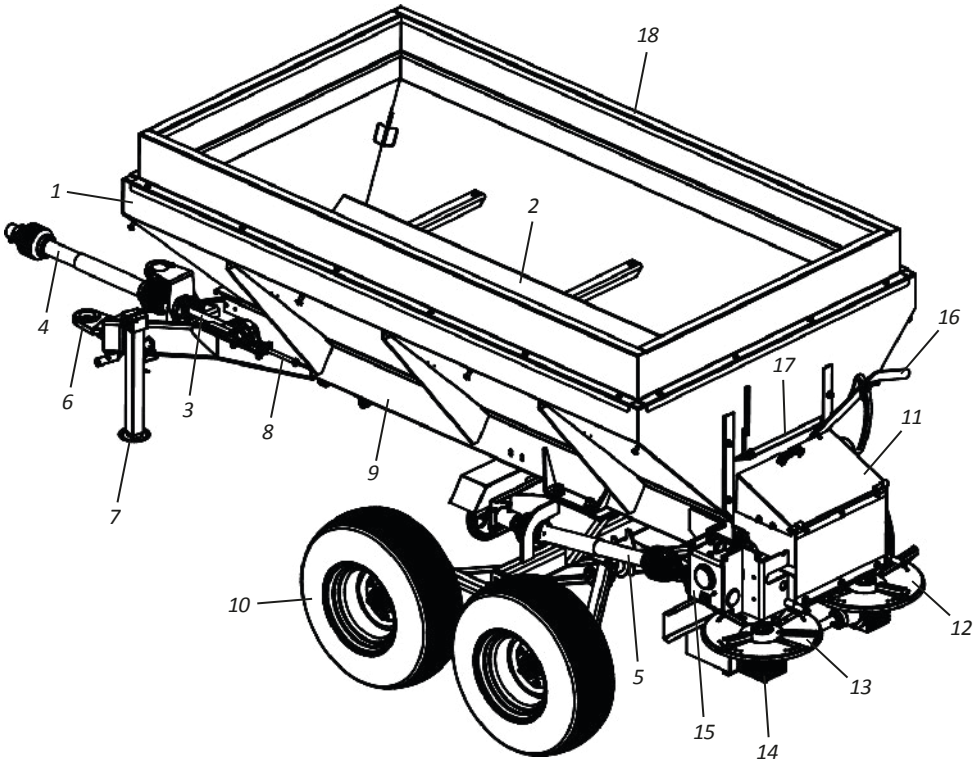

▪ Components

• DCFc - Lime and fertilizer spreader (Belt transmission)

1. Bucket
2. Deflector
3. Central shaft
4. Central cardan
5. Lateral cardan
6. Hook shackle
7. Support Bracket
8. Conveyor turnbuckle
9. Framework
10. Tire
11. Transmission protection
12. Rotating Disks
13. Adjustable vanes
14. Reduction gearbox
15. Lever
16. Rear cover
17. Bucket extension

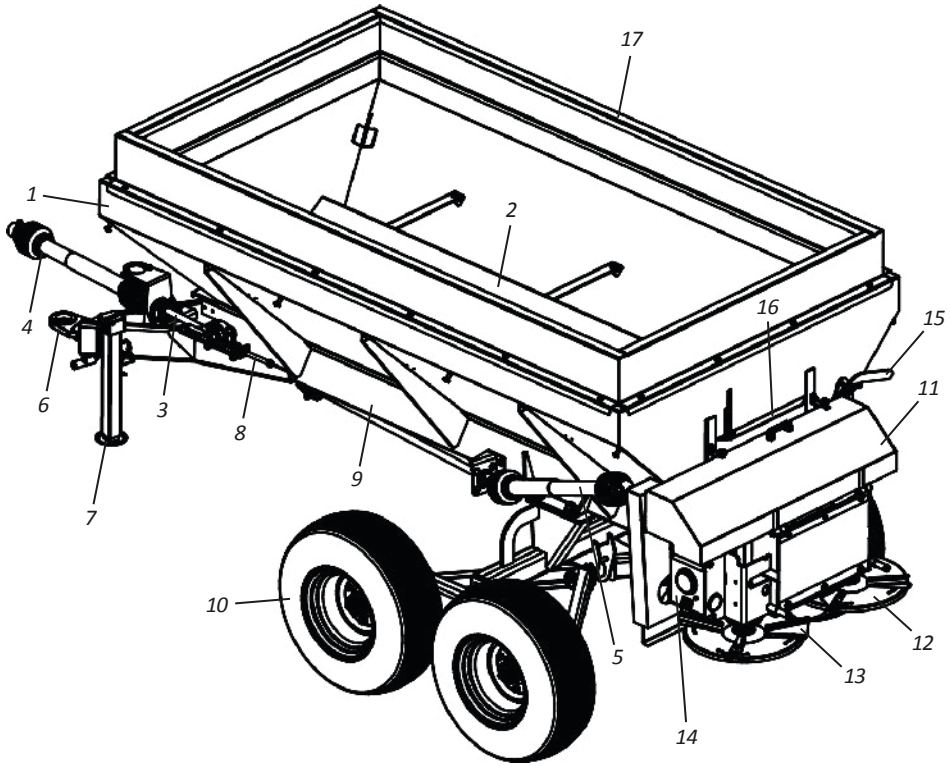

▪ Dimensions

• DCFr/DCFc 3000/6000/8000

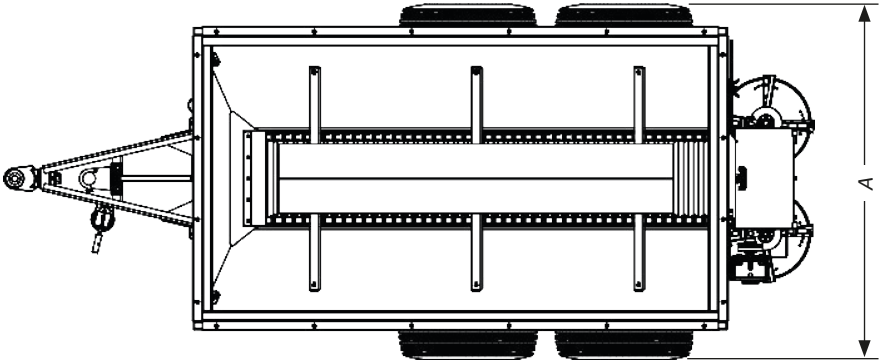

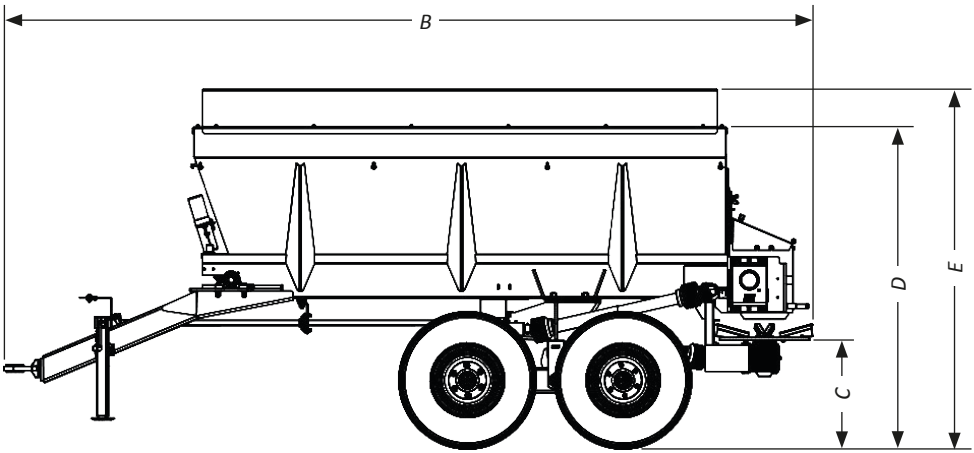

Model	Measurement A (mm)	Measurement B (mm)	Measurement C (mm)	Measurement D (mm)	Measurement E (mm)
DCFr/DCFc 3000	1760	3843	639	1710	-
DCFr/DCFc 6000	1886	4561	639	1816	2032
DCFr/DCFc 8000	1886	4561	639	1816	2032

▪ Specifications

• DCFr/DCFc 3000/6000/8000

Model	Load Capacity (m^3)	Wheelset	Approximate Weight (Kg)	Tractor Power (Hp)
DCFr/DCFc 3000	1,60	Simple (2 Tires)	850	50 - 70
DCFr/DCFc 6000	2,80	Tandem (4 Tires)	1203	75 - 90
DCFr/DCFc 8000	3,80	Tandem (4 Tires)	1325	90 - 100

Lime Discharge ..... 12.000 Kg/Ha
Distribution Width ..... 6 - 10 m
RPM on PTO ..... 540 Rpm

Baldan reserves the right to change and/or perfect the technical characteristics of its products, without previous notice, and without obligation to proceed in the same way with the products previously manufactured. Technical specifications are approximate and informed under normal work conditions.

DCFr/DCFc INTENDED USE

- **DCFr/DCFc** was developed to be used in limestone distribution for liming purposes.
- **DCFr/DCFc** should only be used and started by a properly instructed operator.

DCFR/DCFC USE IS NOT ALLOWED

- To avoid damages, severe accidents or death, do NOT transport people on other part of **DCFr/DCFc.**
- It is NOT allowed to use **DCFr/DCFc** to couple, tow or push other implements or accessories.
- **DCFr/DCFc** should NOT be used by an experienced operator who does not knows all the driving, command and operation techniques.

▪ Assembly

DCFr/DCFc leaves the factory semi-assembled, only missing the tires that were removed for easier loading and transportation. To assembly it, follow the instructions below:

⚠ The assembly of **DCFr/DCFc** shall be performed by the dealer, by trained, skilled and qualified personnel for this work.

⚠ Before beginning the **DCFr/DCFc** assembly, look for a good place that facilitates the identification of the parts and their assembly.

⚠ Do not use loose clothing because they may get entangled in the **DCFr/DCFc**.

▪ Assembly

• Tire assembly

In order to assemble the tires (1), proceed as follows:

01 - Attach the tire (1) to the hub (2) tightening with screws (3) and nuts (4).

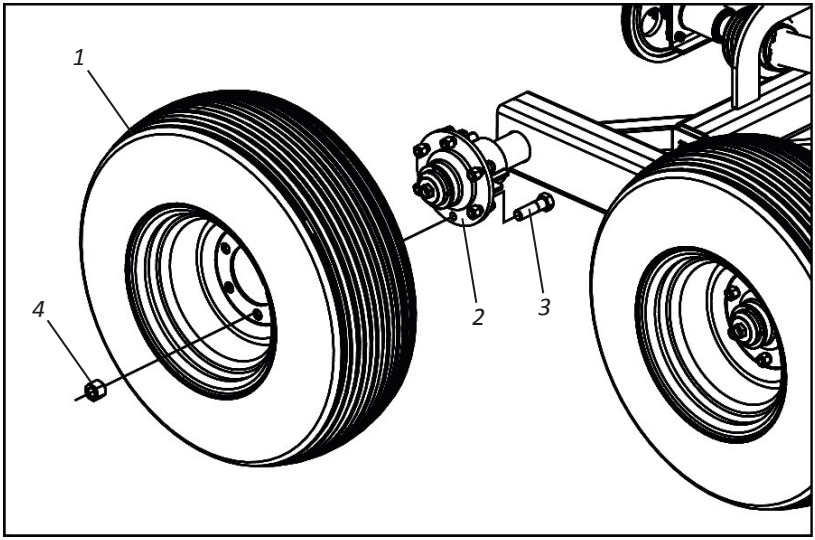

DCFr/DCFc

⚠ ATTENTION

Check the correct tire calibration on page 44.

OBSERVATION

Repeat the procedure above to assemble the other tire.

▪ Assembly

• Bucket extension mounting (Optional)

To assemble the bucket extension, proceed as follows:

01 - Couple the bucket extension (1) to the hopper (2) by securing through the bolts (3), flat washers (4), lock washers (5) and nuts (6).

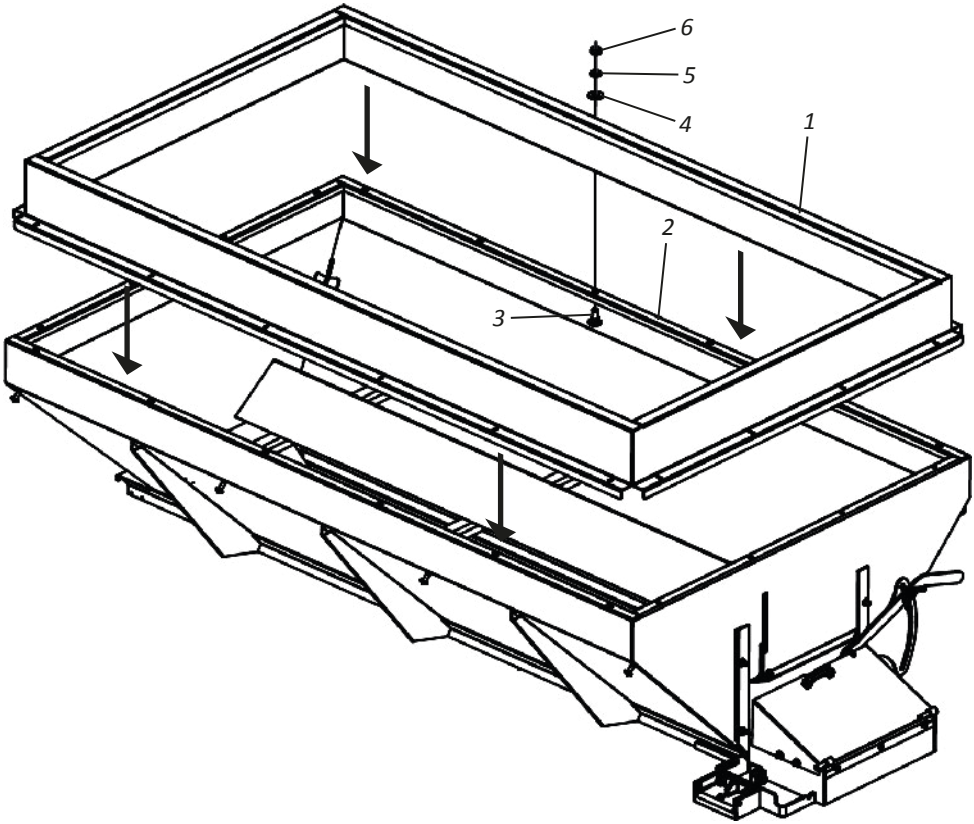

OBSERVATION

Bucket extension (1) is optionally purchased for DCFr / DCFc 6000, so must be mounted per instructions above. For DCFr / DCFc 8000 the bucket extension (1) is standard, leaving the factory assembled.

▪ Hitch

• Tractor hitch

Before attaching the **DCFr/DCFc** to the tractor, make sure the tractor is ready for work by observing the following item:

- Check if the tractor has weight or ballast sets in the front wheels to grant the tractor greater stability and traction on the ground.

To couple-up the **DCFr/DCFc**, proceed as follows:

01 - Slowly approach the tractor to the **DCFr/DCFc** in reverse, being aware when to use the brakes.

02 - Engage the **DCFr/DCFc** header (1) to the tractor by attaching it through the hitch pin (2), and lock (3).

DCFr/DCFc

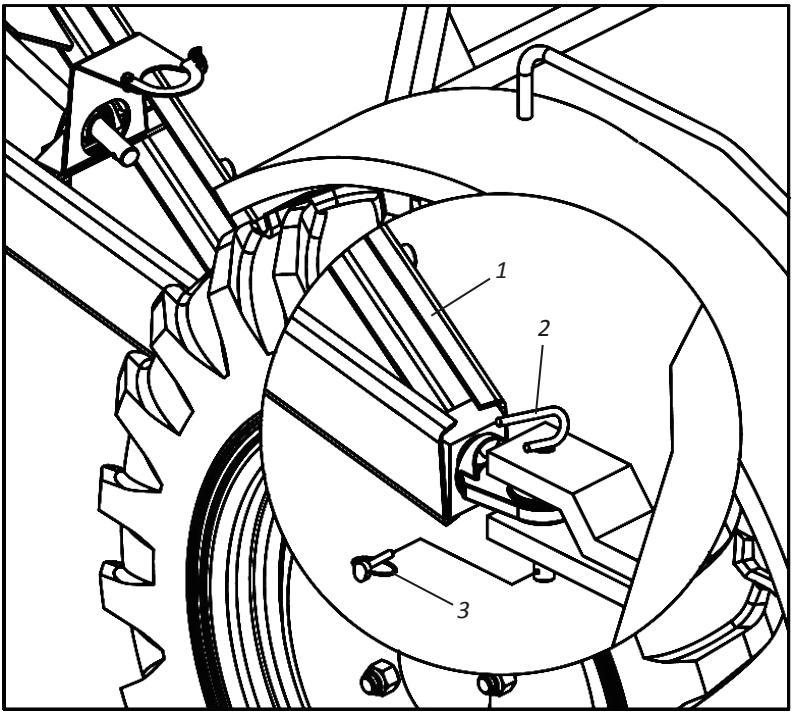

! IMPORTANT | **When coupling DCFr/DCFc, look for a safe place and with easy access. Always use low gear with low acceleration.**

▪ Hitch

• Support bracket

After engaging the **DCFr/DCFc** on the tractor, place the support bracket (1) in the transportation/work position by doing the following:

01 - Remove the support bracket (1) from point **"A"** and place it on **"B"**.

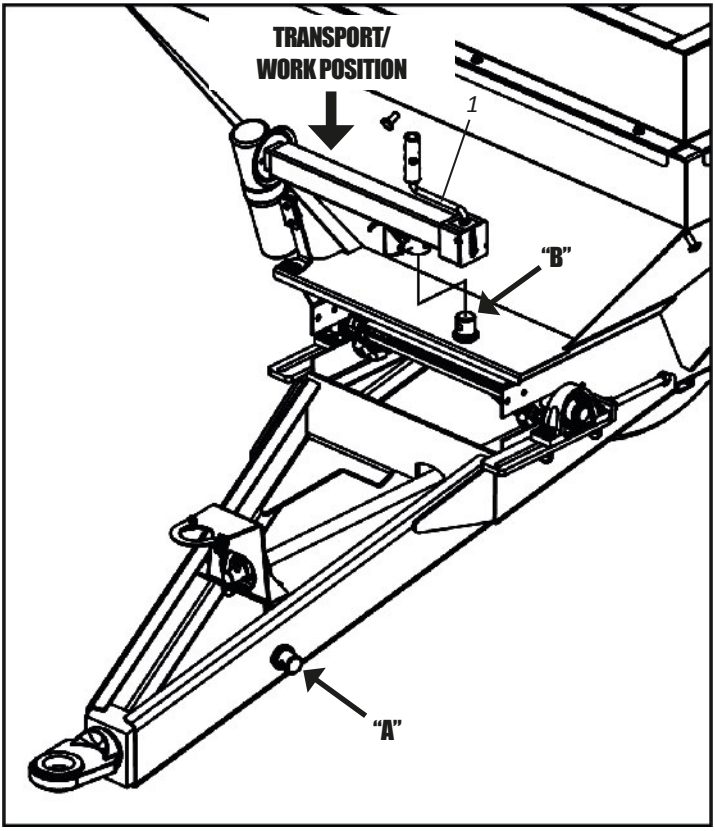

DCFr/DCFc

ATTENTION **Do not work or transport the DCFr/DCFc with the support bracket (1) at point "A". Ignoring this warning may cause severe accidents or damages.**

▪ Levelling

• Distributor levelling

To level the **DCFr/DCFc**, proceed as follows:

01 - First off, the tractor must be in a flat location.

02 - Next, level the distributor, watching the longitudinal levelling (length) in relation to the ground, from the side.

03 - Otherwise, level it through the tractor's drawbar, using the height that results in the best **DCFr/DCFc** leveling.

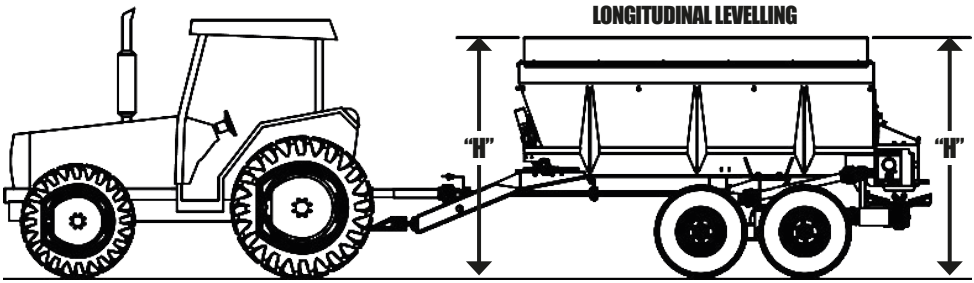

DCFr/DCFc

⚠ ATTENTION | **Read the instructions manual of the tractor and make sure of the positions in which you can work with the drawbar.**

▪ Adjustment

• TDP cardan coupling

Before engaging the cardan, check the length of the tractor with respect to the tractor model that will pull the **DCFr/DCFc**, as follows:

01 - First off, the tractor must be in a flat location.

02 - Separate the cardan parts by coupling one part in the TDP and the other in the **DCFr/DCFc.** Then, steer the tractor until one of the rear tires approaches the maximum **DCFr/DCFc**. Place the cardan parts side by side and check for a minimum clearance of 5 to 7 cm between the "tongued" and "grooved", otherwise cut the cardan according to the instructions on the following page.

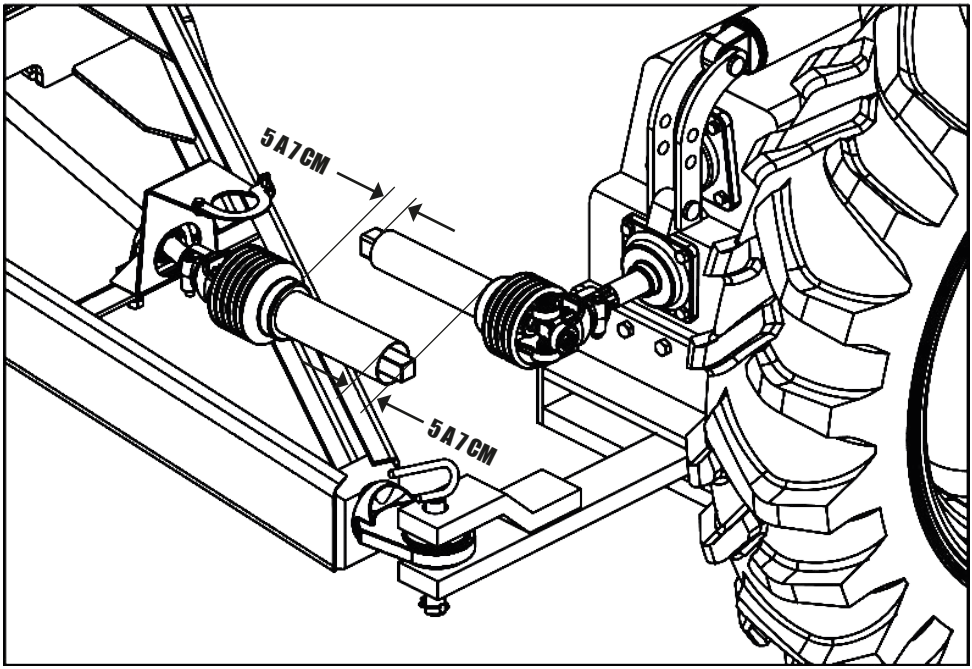

DCFr/DCFc

IMPORTANT | **When coupling DCFr/DCFc, look for a safe place and with easy access. Always use low throttle with low throttle.**

▪ Adjustment

Before engaging the cardan, check the length of the tractor with respect to the tractor model that will pull the **DCFr/DCFc**.

• Cardan length adjustment - Part I

IMPORTANT **Before cutting the cardan, check the adjustment of the tractor's drawbar, which can increase or decrease its compliance, avoiding the cardan cut.**

To perform the cardan cut, proceed as follows:

DCFr/DCFc

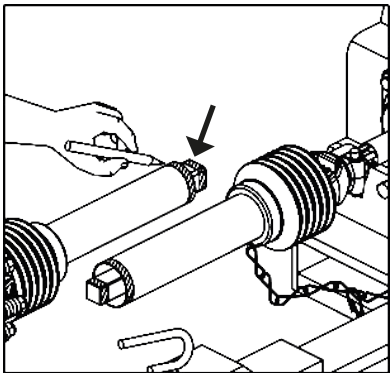

Secure the shaft halves from the shaft close to each other in the working position and mark the part to be cut.

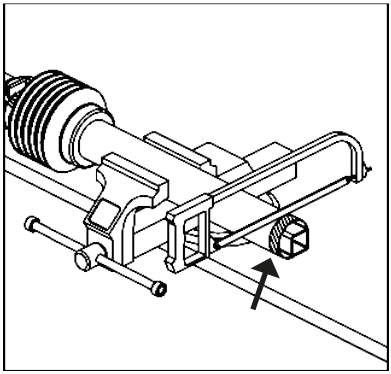

Shorten the inner and outer guards of the cardan proportionally.

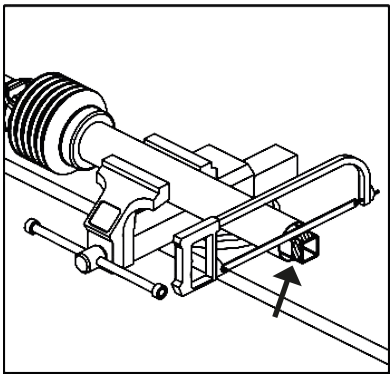

Cut the inner bars of the cardan in the same length as the protective tubes.

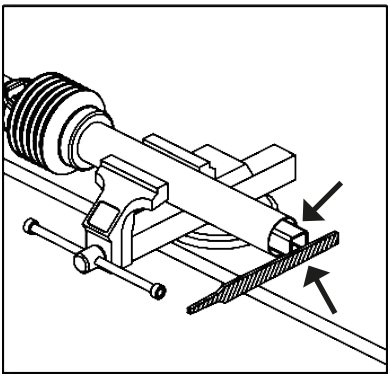

Remove all burrs and edges. Clean and grease the cardan bars.

▪ Adjustment

• Cardan length adjustment - Part II

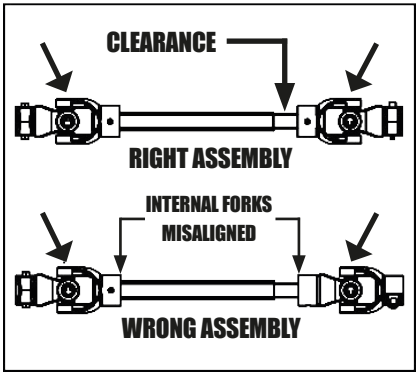

When assembling, observe that the internal and external terminals are always in the same plane, aligned. Also check the clearance on the telescopic axle, which should be of 5 to 7 cm.

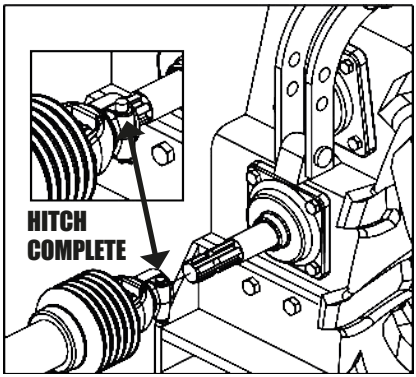

Attach the flange to the TDP axle of the tractor observing that the engagement will only be completed when the lock (1) jumps out.

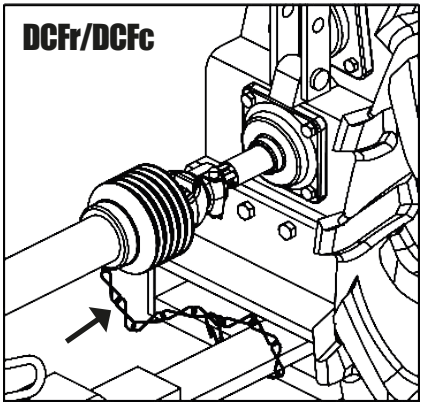

Do not engage the stretched cardan chains. Keep a gap in the installation and consider angular movements.

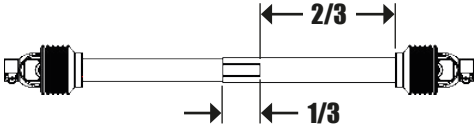

IMPORTANT

The contact surface between the pipe and the bar may never be smaller than 1/3 of the total length.
Every time you change the tractor, check the cardan shaft.

OBSERVATION

Check the cardan's joint angle on page 36 and other recommendations for using it.

ATTENTION

Incorrect mounting of the cardan causes excessive vibration, which is harmful to the transmission.
When engaging the cardan in the TDP, the tractor must be switched off with the parking brake applied.

▪ Adjustment

• Conveyor speed - DCFr

When engaging the cardan in the TDP, the tractor must be switched off with the parking brake applied. This speed has the function of feeding the disks to obtain a uniform distribution. **DCFr** leaves the factory with a gear combination of **16/48**, for the other combinations, **16/16** and **16/12**, proceed as follows:

01 - Take the cardan (1) and the chain (2) off.
02 - Then, loosen the retaining ring (3) and remove the **"A"** gear.
03 - Next, loosen the locking ring (4) and remove the **"B"** gear.
04 - Then, according to your need, replace the **"A"** and **"B"** gears by the **"C"** and **"D"** gears that are attached to the **DCFr** via the flat washer (6) and wingnut (7).
05 - After changing the gears, finally place the chain (2), the cardan (1) and adjust the chain tension through the tensioner (5) using the tensioner (5).

DCFr

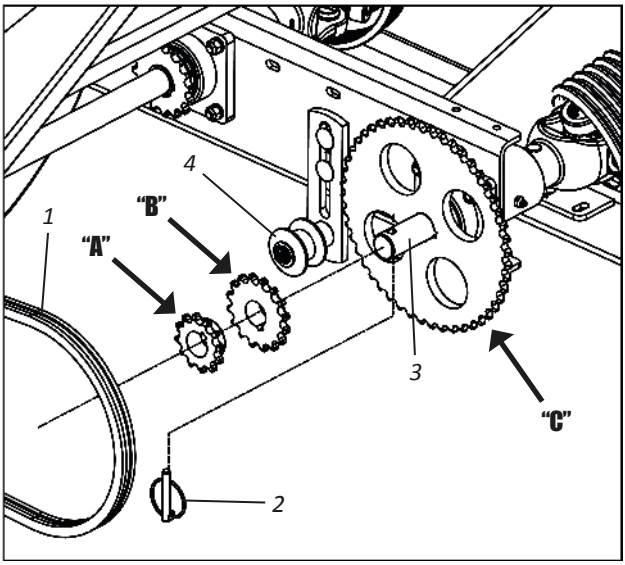

Assembly	Gears Combination	
	Motor	Moving
1	16 Teeth	48 Teeth
2	16 Teeth	16 Teeth
3	16 Teeth	12 Teeth

⚠ ATTENTION

Depending on the combination of gears mounted, there will be a need to decrease the current through the splice therein. Do not work with a loose chain.

▪ Adjustment

• Conveyor speed - DCFc

When engaging the cardan in the TDP, the tractor must be switched off with the parking brake applied. This speed has the function of feeding the disks to obtain a uniform distribution. **DCFc** leaves the factory with a gear combination of **16/48**, for the other combinations, **16/16** and **16/12**, proceed as follows:

01 - Take the cardan (1) and the chain (2) off.
02 - Then, loosen the retaining ring (3) and remove the **"A"** gear.
03 - Next, loosen the locking ring (4) and remove the **"B"** gear.
04 - Then, according to your need, replace the **"A"** and **"B"** gears by the **"C"** and **"D"** gears that are attached to the **DCFc** via the flat washer (6) and wingnut (7).
05 - After changing the gears, finally place the chain (2), the cardan (1) and adjust the chain tension through the tensioner (5).

DCFc

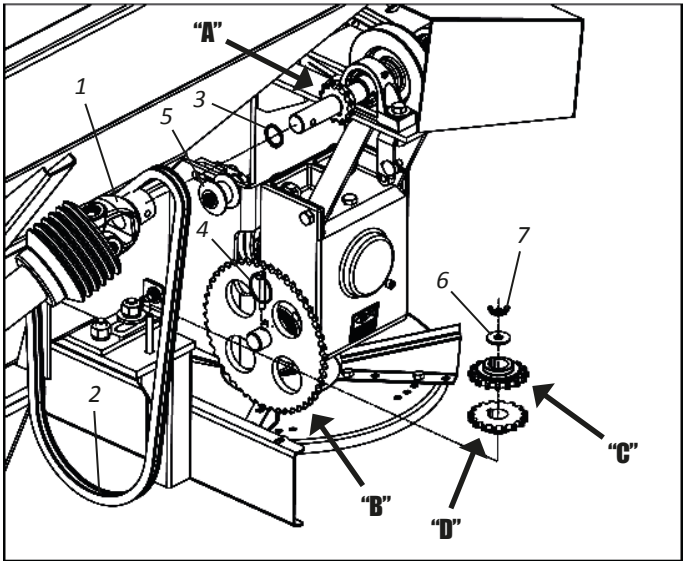

Assembly	Gears Combination	
	Motor	Moving
1	16 Teeth	48 Teeth
2	16 Teeth	16 Teeth
3	16 Teeth	12 Teeth

⚠ ATTENTION

Depending on the combination of gears mounted, there will be a need to decrease the current through the splice therein. Do not work with a loose chain.

▪ Adjustment

• Conveyor tension

To adjust the conveyor (1) tension, proceed as follows:

01 - First, turn the power plug and the tractor's motor off.
02 - Then, make sure that **DCFr/DCFc** is empty, if not, make it empty.
03 - After, press the conveyor from the bottom up and observe if there is a gap of up to 50 mm in relation to the bottom of **DCFr/DCFc**.
04 - If there is greater clearance, adjust the belt tension (1) for this, loosen the locknut (2), the nuts and locknuts (3) and adjust the tensioner (4). When adjustment is complete retighten the nuts and locknuts (3) and the locknut (2).

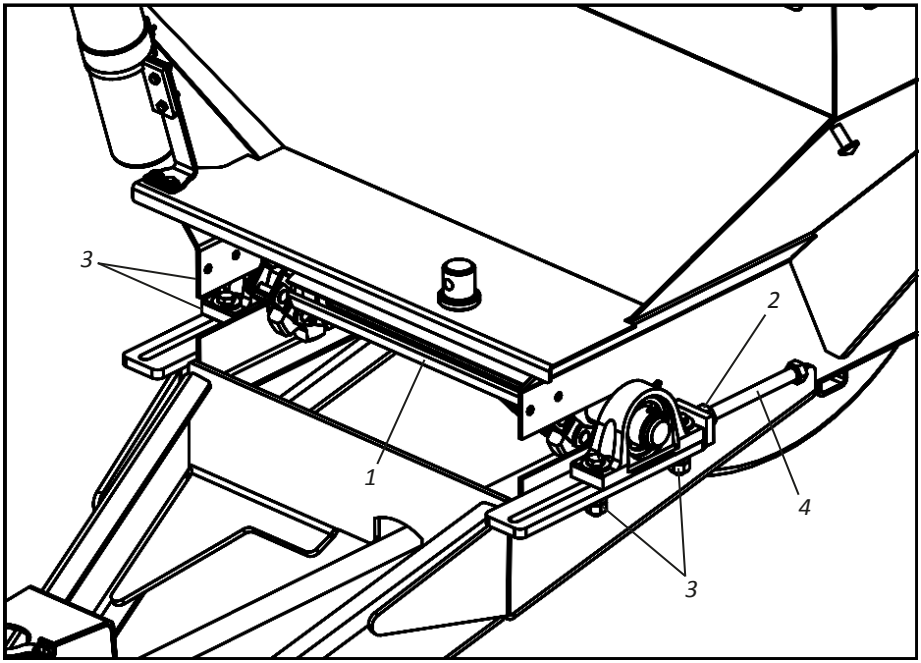

⚠ ATTENTION

When adjusting the conveyor tension, adjust both sides evenly, avoiding the conveyor misalignment. In the first hours of work, check the conveyor tension. Then, perform a daily check. When the belt tension adjustment reaches the end, one or more links must be removed from it, returning the tensioner to the starting position.

▪ Adjustment

• Chain tension

The chain tension (1) is performed through the tensioner (2). To adjust the chain (1) tension, proceed as follows:

01 - Loosen the nut (3), slide the tensioner (2) by adjusting the chain tension (1).

02 - Next, tighten the screw (3) once more, fixing the tensioner (2).

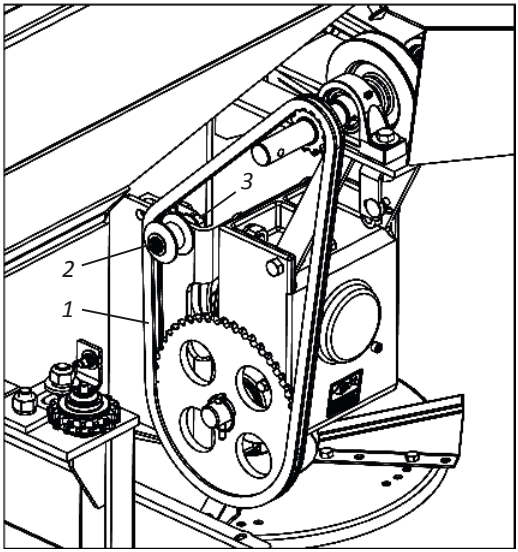

DCFc

DCFr

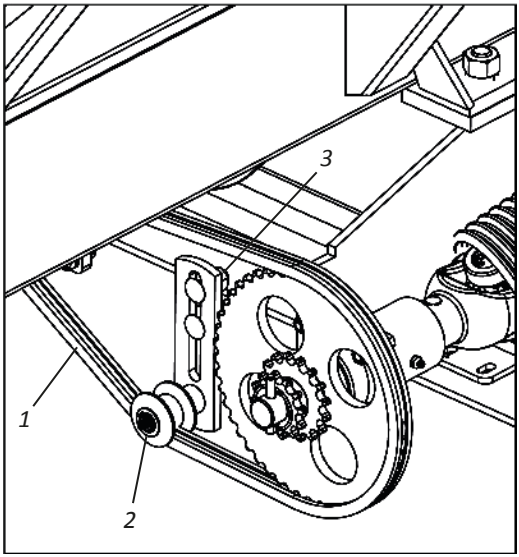

⚠ ATTENTION

Check the chain tension daily, the normal clearance should be + - 1 cm in the center of the chain.

▪ Adjustment

• Belt tension

To adjust the belt (1) tension, proceed as follows:

01 - Loosen the nut (2) from the pulley (3), along with the inner nut (4) from the tensioner (5).

02 - Then tighten the belt tension (1) through the outer nut (6) of the tensioner (5) and then retighten the inner nut (4) and the nut (2) from the pulley (3).

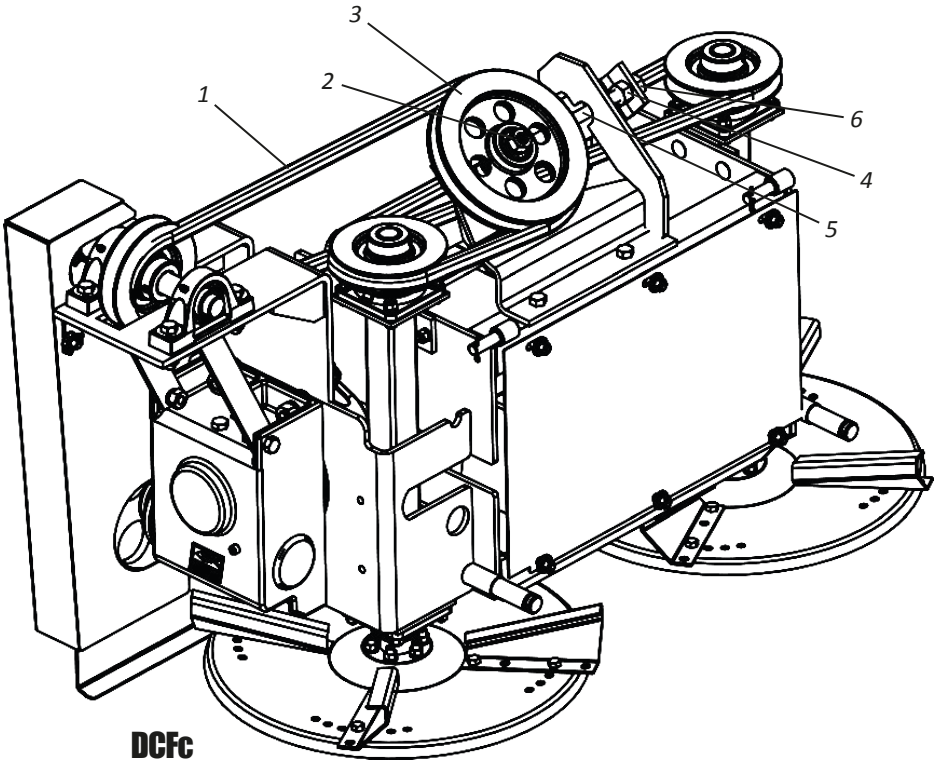

DCFc

⚠ ATTENTION

In the first hours of work, check the chain tension.
Then, perform a daily check. Do not run DCFc with loose chains.

! IMPORTANT

The allowed clearance is of 3.5cm.

▪ Adjustment

• Belt replacement

TO REPLACE THE BELT, PROCEED AS FOLLOWS:

01 - Loosen the nuts (1) from the tensioner (2), and the nut (3) from the pulley (4). Next, take the chain (5) off.

TO PLACE THE BELT, PROCEED AS FOLLOWS:

01 - Start the belt (5) placing, positioning it on the **"A"** pulley.
02 - Next, slide the lower part of the belt (5) onto the **"B"** pulley from the right distributor disc.
03 - Then twist the belt (5) and thread it into the **"C"** pulley from the left distributor disc.
04 - Finally, pass the belt (5) through the **"D"** pulley from the tensioner (2).
05 - After finishing placing the belt (5), tension it, adjusting the tensioner (2) and tight the nut (3) from the pulley (4).

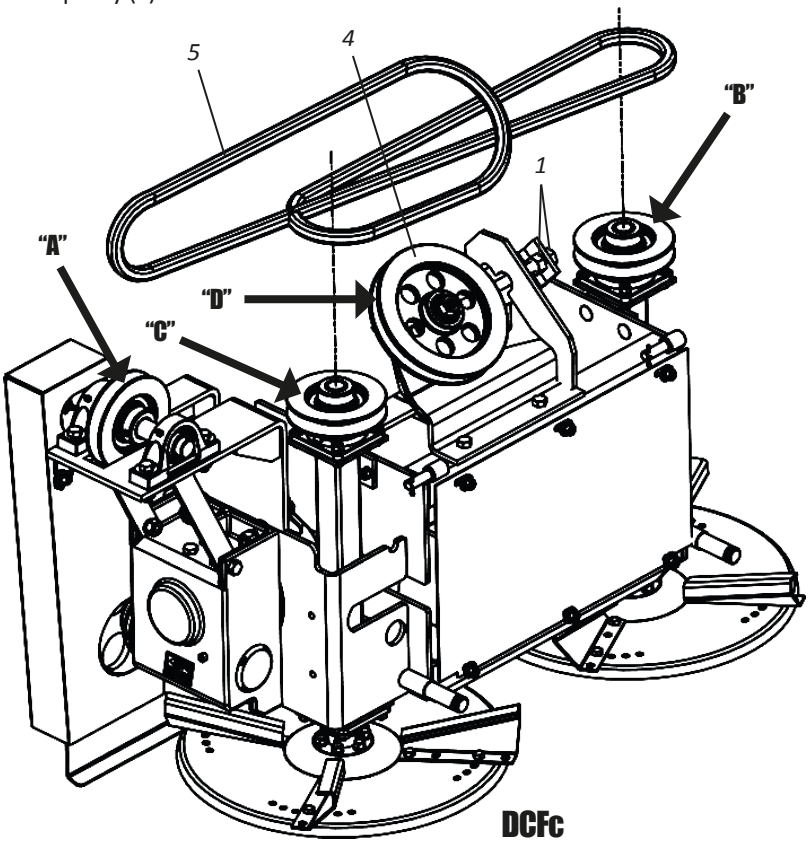

DCFc

▪ Adjustment

• Shut-off gate adjustment

DCFr/DCFc has a Shut-off gate (1) that, through a step range (2), adjusts the amount of product to be distributed. To adjust the product flow, proceed as follows:

01 - Loosen the wing nut (3).
02 - Then pull the lever (4) adjusting the opening or closing of the gate (1) according to the graduated scale (2) from (0 to 22).
03 - Then retighten the wing nut (3).

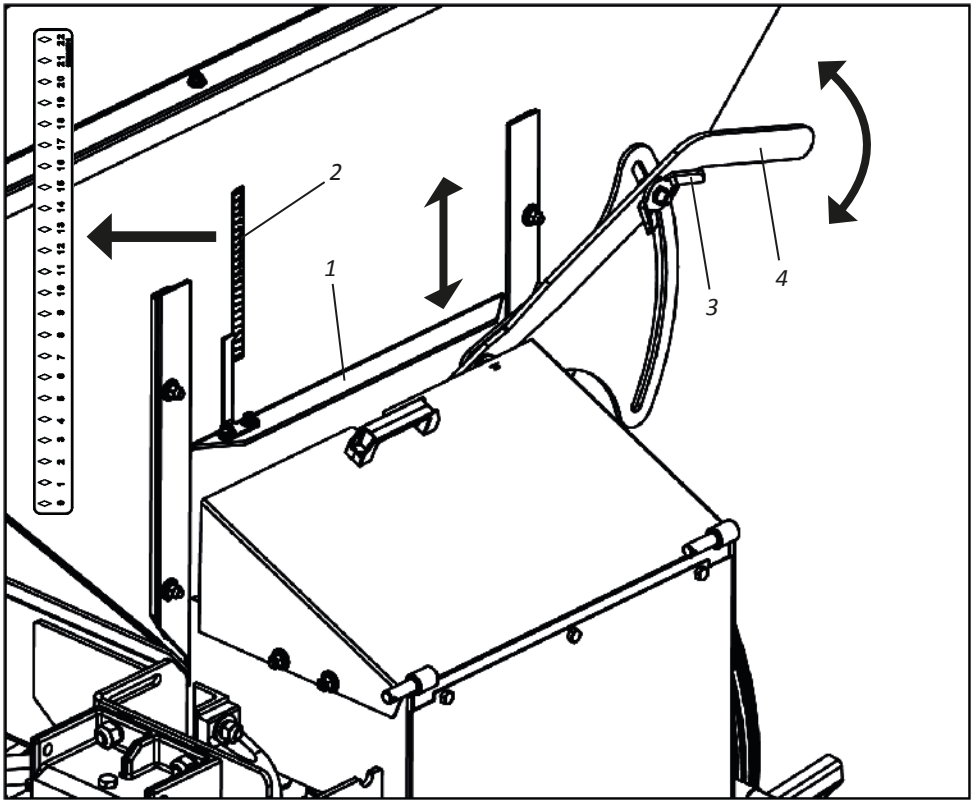

DCFr/DCFc

IMPORTANT | **Seed pages 40, 41 and 42 for distribution tables to regulate Shut-off gate (1) and step range (2).**

▪ Adjustment

• Vanes position in the power distribution disks

The distributor discs (1), have adjustable fins (2) which make the uniform distribution both at high and low dosage.

By varying the fins (2) angle, the width of the application range and the product direction are changed. To adjust the vanes, proceed as follows:

DCFr/DCFc

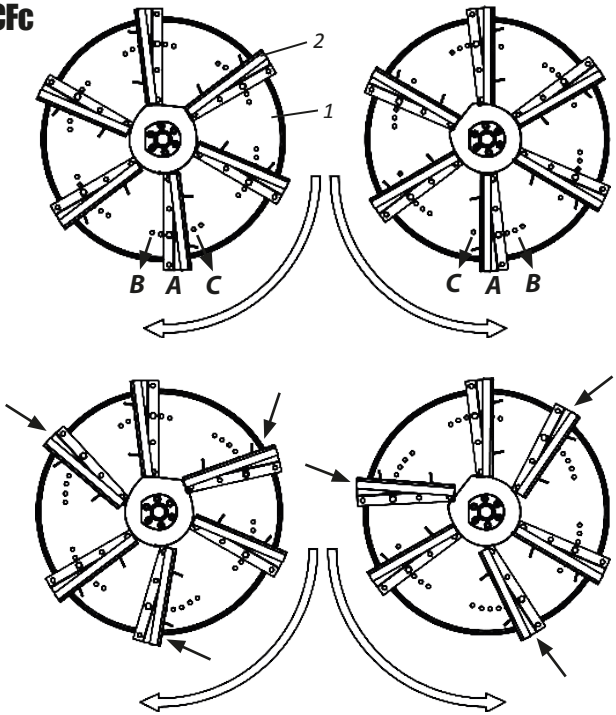

POSITION "A"

Medium distribution width and intermediate product targeting.

POSITION "B"

Smaller distribution width and more centralized product targeting.

POSITION"C"

Larger distribution width and the product will be more edge oriented.

⚠ ATTENTION

If it is required to change the procedure from a part to obtain better uniformity in the distribution, only 3 fins can be adjusted at different angles from the others, by intersperse them, changing the positions on the disc.

▪ Adjustment

• Cardan recommendations

The cardan is limited in its maximum angle of articulation. This angle, with running cardan, can reach a maximum of 35° for a short period of time. In continuous work, it should not exceed 15°.

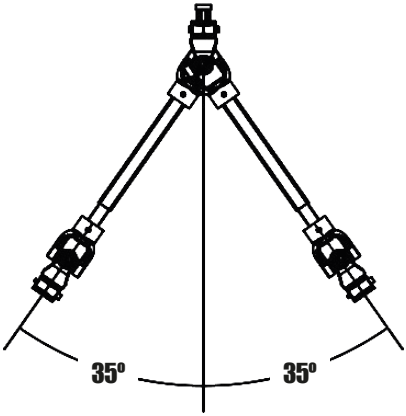

IN A SHORT PERDIOD OF TIME

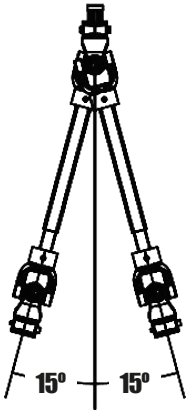

IN CONTINUOUS WORK

⚠ ATTENTION

Never engage the TDP when the joint is at an angle greater than 15°.
When maneuvering with TDP off, never exceed 35° of pivot angle, this may occur in transport routes or maneuvers in sheds with the cardan coupled up.

Safety protection (1) is a fundamentally important component for the user's personal safety and for the cardan shaft's lifespan.

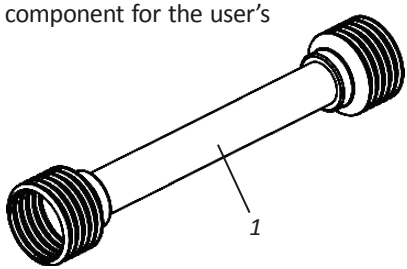

! IMPORTANT

Do not work with the DCFr/DCFc if the cardan is not protected (1). Ignoring this warning may cause severe accidents or cardan damages.

OBSERVATION

The information on this page has been taken from the cardan manufacturer's catalog.

▪ Operations

• Distance between strokes

The distance between the passes must be well observed by the operator in order to achieve a homogeneous distribution throughout the area. However, during the work, a variation up to 25% in the amount distributed between the passes is accepted.

We recommend the distance of 7 meters between thepasses for the distribution of dry limestone and plaster.

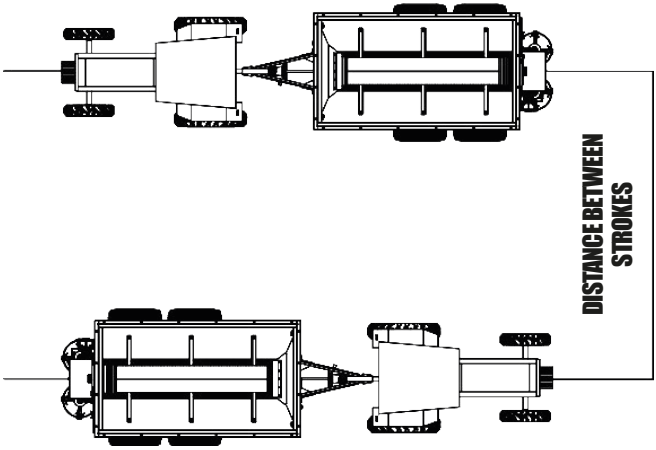

DCFr/DCFc

⚠ ATTENTION

Do not allow people and animals to keep close while working.

! IMPORTANT

We recommend you do not increase distance between strokes.

• Overlapping

The overlap is the covering of the product being distributed at the end of the edge of the range just prior to the one being performed, this is done to compensate for the distribution deficiency which occurs naturally at the range edges.

DCFr/DCFc

⚠ ATTENTION **Do not perform adjustments while DCFr/DCFc is in motion or with the transmission active.**

▪ Operations

• Recommendations for the operation

The preparation of **DCFr/DCFc** and tractor will allow that you save time and have a better result in works on the field. The following suggestions may be useful for you.

GENERAL RECOMMENDATION - PART I

01 - Adjust the tractor according to the content of the instruction manual, always using front and rear weights to stabilize the equipment.
02 - Always couple to the tractor in low gear and very carefully
03 - Check that the **DCFr/DCFc** coupling is complete and leveled. Place the support bracket in the transport position and maintain the drawbar of the tractor fixed.
04 - After coupling and leveling, the next adjustments will be done directly in the field of work, analyzing the terrain in texture, humidity and the types of operations to be done with **DCFr/DCFc**.
05 - Observe the working and transport speeds specified on page 10. We do not recommend you to exceed the speeds to maintain service efficiency and avoid possible damage to **DCFr/DCFc**.
06 - During work or transport, the tractor's drawbar must remain fixed.
07 - Do not transport or work with excess load over the **DCFr/DCFc.**
08 - Before starting work, do a thorough review at **DCFr/DCFc**. Crossheads should be lubricated, check the oil level from the multiplier box and retighten nuts and screws. Also check the locking of pins and cotters.
09 - The ideal rotation is 540 rpm on TDP. Check the corresponding rotation on the motor, in the tractor manual. This rotation on the traction motor changes from tractor to tractor.
10 - Always observe the limestone distributing mechanisms operation and the settings established at the start of the work as well.
11 - When performing any maintenance on the **DCFr/DCFc**, the motor must be switched off.
12 - Check the conveyor tension and the transmission belt as well.
13 - Do not make sharp turns with **DCFr/DCFc** while working.
14 - **DCFr/DCFc** has several adjustments, but only local conditions can determine the best adjustment.
15 - Check the correct **DCFr/DCFc** tire calibration according to the tire model on page 44.
16 - Before supplying the **DCFr/DCFc**, check that there are no objects inside the bucket, such as sticks, stones, sacks, canvas, parts, etc. Make sure the product you are using does not contain foreign objects.
17 - Watch the lubrication interval.

▪ Operations

GENERAL RECOMMENDATION - PART II

18 - To engage or uncouple the cardan, the TDP must be switched off.
19 - The weight of the product is related to its granulometry and density.
20 - The distributor operates more efficiently in the range of 5 to 7 km/h.

In case de doubts, never operate or handle DCFr/DCFc, refer to Post-Sales.
Telephone: 0800-152577 / E-mail: posvenda@baldan.com.br

▪ Distribution System

• Dry limestone distribution table - Kg/Ha

Gears: Motor **16 teeth** Moving **48 teeth**		Rotation PTO 540 RPM				Weight 1500 Kg/m		
Scale Opening	Amount of Kg per second	Tractor speed						
		4 km/h	5 km/h	6 km/h	7 km/h	8 km/h	9 km/h	10 km/h
		Amount of Kg per Hectare						
0	0,29	0371	0297	0247	0212	186	164	148
1	0,38	0493	0394	0329	0282	247	219	197
2	0,46	0593	0474	0395	0339	296	264	236
3	0,59	0765	0612	0510	0437	383	340	306
4	0,67	0857	0686	0571	0490	429	380	343
5	0,82	1070	0856	0713	0611	535	476	428
6	0,97	1250	1000	0833	0714	625	554	500
7	1,06	1357	1086	0905	0775	679	603	543
8	1,11	1429	1143	0953	0817	715	635	572
9	1,22	1577	1257	1047	0898	786	698	628
10	1,33	1714	1371	1142	0979	857	762	686
11	1,39	1785	1428	1190	1020	893	794	714
12	1,44	1857	1486	1238	1061	929	825	743

⚠ ATTENTION

Due to different granulometry and specific weights from the applied products, variations can be observed in relation to the presented table. We recommend that you perform practical tests on page 43 before applying.

▪ Distribution System

• Dry limestome distribution table - Kg/Ha

Gears: Motor **16 teeth** Moving **16 teeth**		Rotation PTO 540 RPM				Weight 1500 Kg/m		
Scale Opening	Amount of Kg per second	Tractor speed						
		4 km/h	5 km/h	6 km/h	7 km/h	8 km/h	9 km/h	10 km/h
		Amount of Kg per Hectare						
0	1,39	1785	1428	1190	1020	0892	0793	0714
1	1,72	2213	1770	1475	1265	1106	0984	0880
2	2,05	2641	2113	1760	1509	1320	1174	1056
3	2,39	3069	2455	2046	1754	1535	1364	1228
4	2,72	3497	2797	2331	1998	1749	1554	1399
5	3,05	3925	3140	2617	2243	1963	1744	1570
6	3,39	4357	3486	2905	2490	2178	1936	1743
7	3,70	4750	3800	3167	2714	2375	2111	1900
8	4,00	5143	4114	3429	2939	2572	2286	2057
9	4,30	5536	4429	3691	3163	2768	2460	2214
10	4,61	5929	4743	3953	3388	2965	2635	2372
11	4,92	6322	5058	4214	3612	3161	2810	2529
12	5,22	6714	5371	4476	3836	3357	2984	2686

⚠ ATTENTION

Due to different granulometry and specific weights from the applied products, variations can be observed in relation to the presented table. We recommend that you perform practical tests on page 43 before applying.

▪ Distribution System

• Dry limestone distribution table - Kg/Ha

Gears: Motor **16 teeth** Moving **12 teeth**		Rotation PTO 540 RPM				Weight 1500 Kg/m		
Scale Opening	Amount of Kg per second	Tractor speed						
		4 km/h	5 km/h	6 km/h	7 km/h	8 km/h	9 km/h	10 km/h
		Amount of Kg per Hectare						
0	1,85	2377	1902	1585	1358	1188	1056	951
1	2,29	2941	2353	1961	1681	1471	1307	1176
2	2,73	3506	2804	2337	2003	1753	1558	1402
3	3,19	4087	3270	2725	2335	2043	1816	1635
4	3,63	4651	3721	3101	2658	2326	2067	1860
5	4,07	5216	4172	3477	2980	2608	2318	2086
6	4,52	5797	4638	3865	3313	2898	2576	2319
7	4,93	6327	5062	4218	3615	3164	2812	2531
8	5,33	6840	5472	4560	3909	3420	3040	2736
9	5,73	7353	5882	4902	4202	3677	3268	2941
10	6,15	7883	6306	5255	4505	2942	3504	3153
11	6,56	8413	6731	5609	4808	4207	3739	3365
12	6,96	8926	7141	5951	5101	4463	3967	3570

⚠ ATTENTION

Due to different granulometry and specific weights from the applied products, variations can be observed in relation to the presented table. We recommend that you perform practical tests on page 43 before applying.

▪ Calculation

• Work speed calculation

In order to calculate the speed, proceed as follows:

01 - Place the product to be applied to the middle of the **DCFr/DCFc** tank.
02 - Then place two spaced marks at 100 meters in the application area.
03 - Then, calculate the time used to go through the distance with the **DCFr/DCFc** coupled up.
04 - Then calculate the time measured in kilometers (km) using the following formula:

Km/hr = Distance travelled/ Spent time in seconds x 3.6 = (conversion factor from m/s to Km/hr).

Example:
Km/hr = 100 / 60s x 3,6 = 6 Km/h

• Fertilizer dosage calculation per minute

To perform the calculation, turn off the distributor discs, if it is with a reducer, remove the cardan from the discs, if it is a belt, remove the belt, start the **DCFr/DCFc** at 540 rpm and keep it in place. Then collect the product by measuring the time.

Formula: $$S = \frac{VT \times LT \times D}{600}$$

Formula Data:
S = Product output (Kg/min).
VT = Work Speed (Km/h).
LT = Working width (Application Range).
D = Dosage (Kg/ha).

Example: $$S = \frac{6 \times 12 \times 300}{600} = 36 \text{ (Kg/min).}$$

▪ Maintenance

DCFr/DCFc has been developed to provide you with the maximum yield on land conditions. Experience has shown that periodic maintenance of certain parts of **DCFr/DCFc** is the best way to help you avoid problems, so we suggest verification.

• Tires pressure

The tires should always be properly calibrated avoiding early wear due to excess or lack of pressure.

STANDARD: TIRES 750 X 16 PLY
DCFR/DCFC 3000/6000

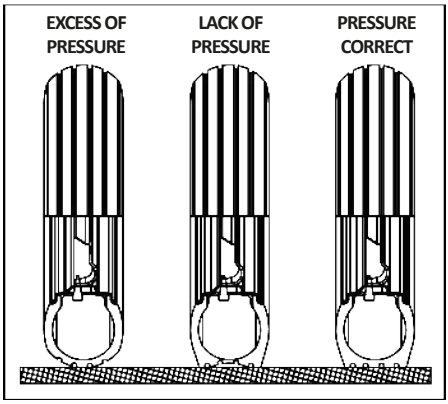

USE: 60 LBS/POL²

STANDARD: TIRES 11 L 15
DCFR/DCFC 8000

OPTIONAL: TIRES 11 L 15
DCFR/DCFC 3000/6000

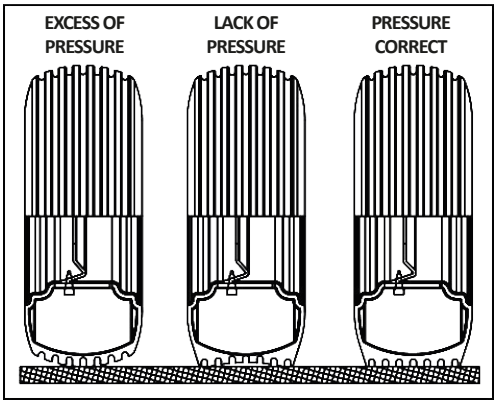

USE: 52 LBS/POL²

⚠ ATTENTION

Never weld the wheel mounted with tire, the heat may cause air pressure increase and provoke the explosion of the tire.
When filling the tire, position yourself besides the tire, never in front of it.
To fill the tire, always use containment device (armor cage).
Assemble the tires with proper equipment. The service should only be performed by by people qualified to do the work.

! IMPORTANT

When calibrating tires, do not exceed the recommended calibration.

OBSERVATION

The pressure of the tractor tires should be performed according to the manufacturer´s recommendation.

▪ Maintenance

DCFr/DCFc has been developed to provide you with the maximum yield on land conditions. Experience has shown that periodic maintenance of certain parts of **DCFr/DCFc** is the best way to help you avoid problems, so we suggest verification.

• Lubrication

Lubrication is indispensable for a good performance and greater durability of **DCFr/DCFc** moving parts, contributing to the maintenance cost savings.

Before starting the operation, carefully lubricate all grease cups, always observing the lubrication intervals in the following pages. Make sure of the lubricant quality regarding its efficiency and purity, avoiding products contaminated by water, dust and other agents.

• Table of greases and equivalents

Manufacturer	Types of grease recommended
Petrobrás	Lubrax GMA-2
Atlantic	Litholine MP 2
Ipiranga	Ipiflex 2
Castrol	LM 2
Mobil	Grease MP
Texaco	Marfak 2
Shell	Alvania EP 2
Esso	Multi H
Bardahl	Maxlub APG-2EP
Valvoline	Palladium MP-2
Petronas	Tutela Jota MP 2 EP
	Tutela Alfa 2K
	Tutela KP 2K

ATTENTION **If there are equivalent manufacturers and/or brands that are not listed in the table, consult the manufacturer's technical manual.**

▪ Maintenance

• Lubrication every 5 hours of work

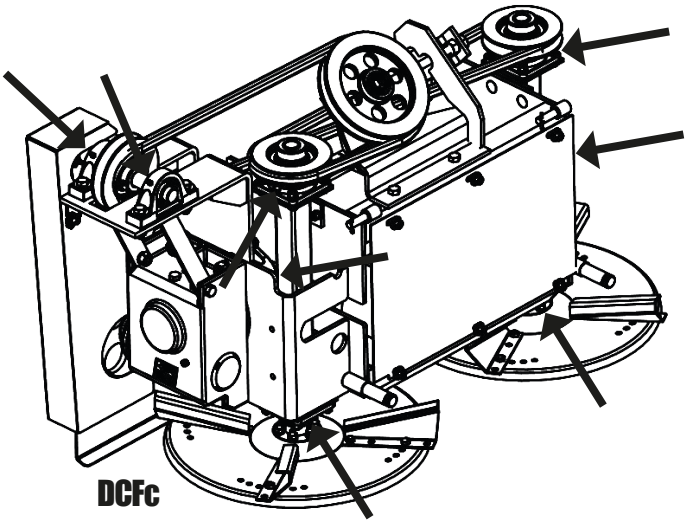

DCFc

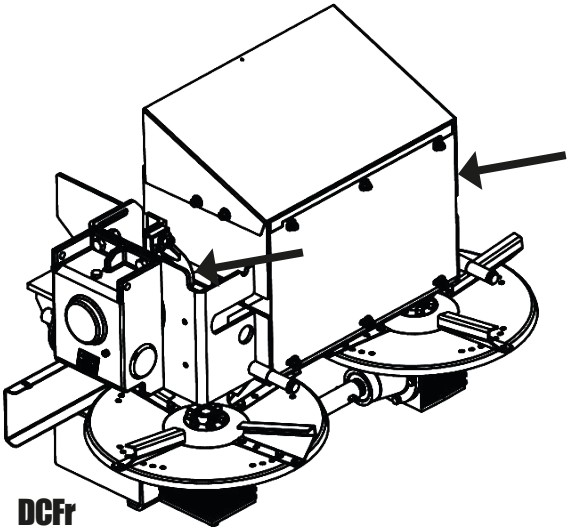

DCFr

⚠ ATTENTION

When lubricating DCFr/DCFc, do not exceed the amount of new grease. Put an adequate amount.

▪ Maintenance

• Lubrication every 8 hours of work

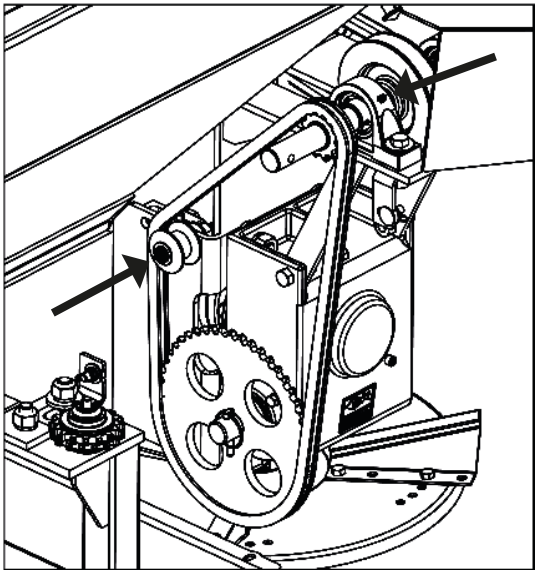

DCFc

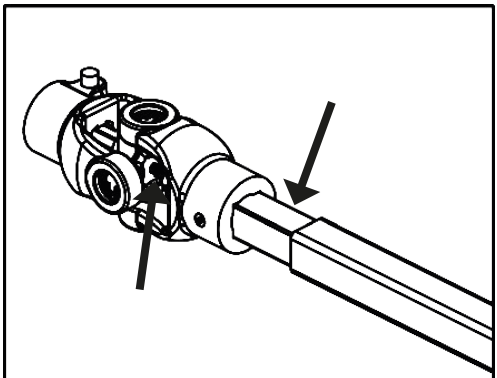

DCFr/DCFc

⚠ ATTENTION

When lubricating DCFr/DCFc, do not exceed the amount of new grease. Put an adequate amount.

▪ Maintenance

- Lubrication every 8 hours of work

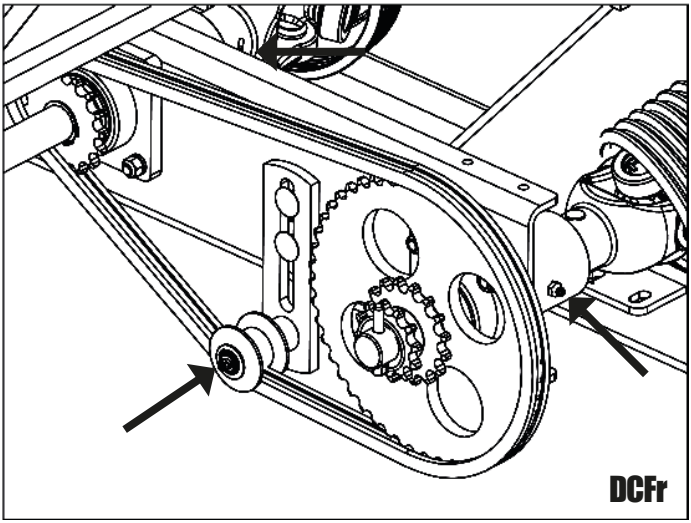

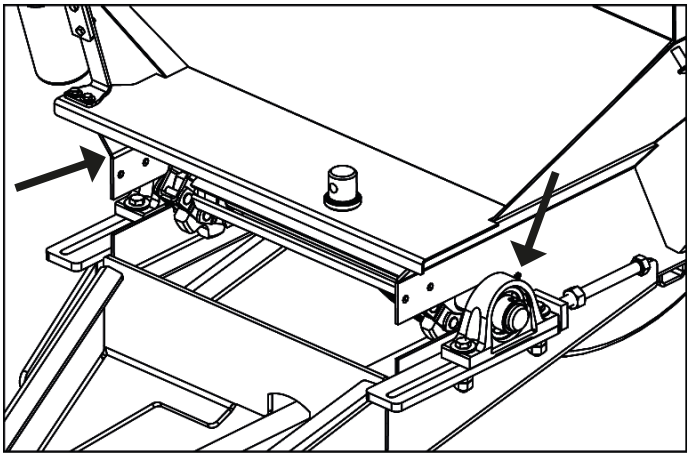

DCFr/DCFc

⚠ ATTENTION

When lubricating DCFr/DCFc, do not exceed the amount of new grease. Put an adequate amount.

▪ Maintenance

- Lubrication every 8 hours of work

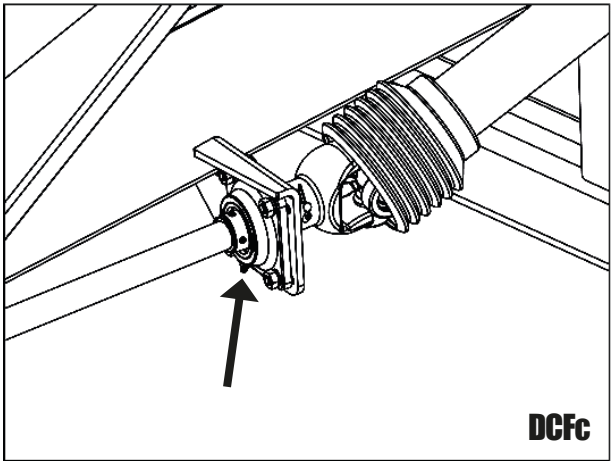

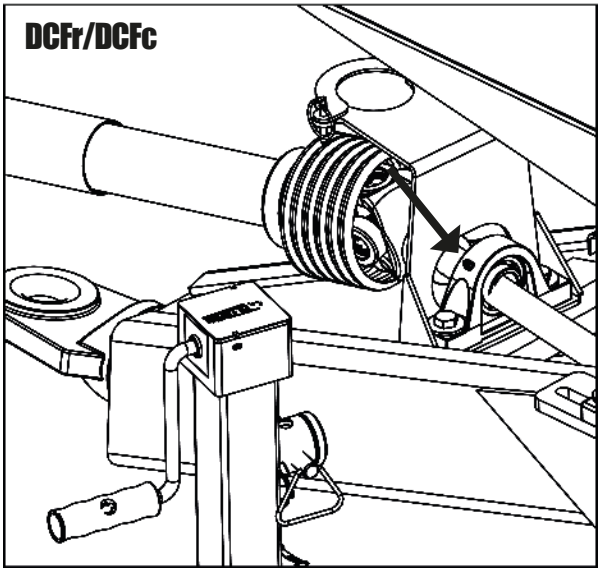

⚠ ATTENTION

When lubricating DCFr/DCFc, do not exceed the amount of new grease. Put an adequate amount.

▪ Maintenance

• Lubrication every 24 hours of work

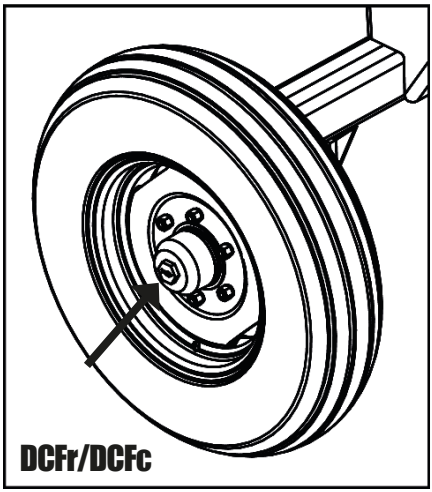

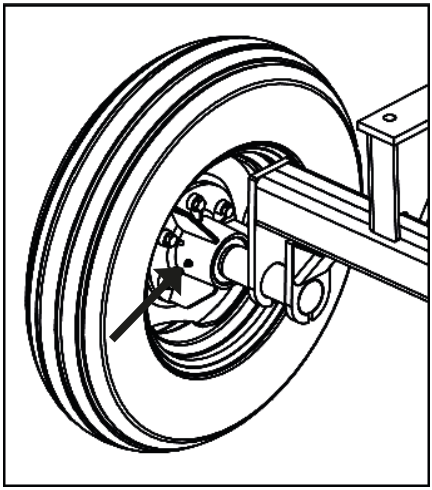

• Lubrication every 30 hours of work

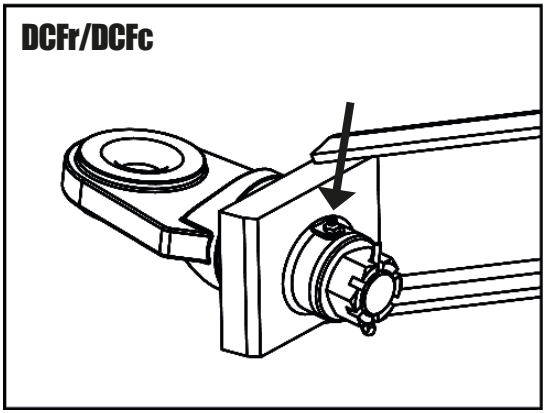

⚠ ATTENTION

When lubricating DCFr/DCFc, do not exceed the amount of new grease. Put an adequate amount.

▪ Maintenance

- Lubrication every 60 hours of work

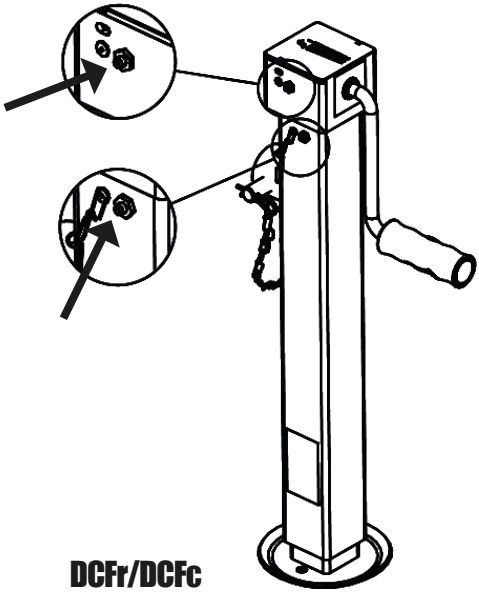

DCFr/DCFc

⚠ ATTENTION

When lubricating DCFr/DCFc, do not exceed the amount of new grease. Put an adequate amount.

▪ Maintenance

DCFr/DCFc has been developed to provide you with the maximum yield on land conditions. Experience has shown that periodic maintenance of certain parts of the distributor is the best way to help you avoid problems, so we suggest verification.

ATTENTION **Check nuts and bolts if necessary, retighten them. The maintenance of general re-installation of the equipment must be performed every 8 hours of work.**

• Safety fuse

The gearbox safety fuse (1) unit is intended to prevent damage to the transmission system caused by stresses greater than the dimensioning. If the safety fuse (1) starts to break frequently, check:

01 - Check if there are no Foreign objects locking the conveyor.
02 - If the product is not too compacted on the conveyor, which may occur with dry powder products.
03 - Adjusting the belt tensioner, one side may be tighter than the other.

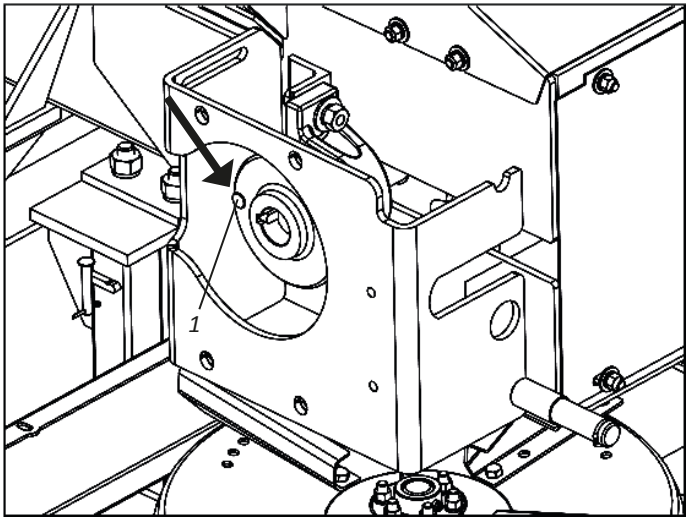

ATTENTION **Only use factory original fuses, since they are the only ones which have controlled hardness. Do not use two or more fuses, this will increase the resistance and damage the system.**

▪ Maintenance

• Gearbox reduction - Oil replacement

Periodically check the oil level of the reduction gearbox (1) through the screw indicating the level (2) and refill it whenever required. To perform the reduction gearbox oil change (1), proceed as follows:

01 - Take the drainage plug (4), the breather cap (3) and the level indicator screw (2) off letting all the oil from the reduction gearbox (1) drain out.

02 - Then, reinstall the drainage plug (4) and fill with the breather cap (3) to the oil leak out by the breath level (2).

03 - Finish by replacing the level indicator screw (2) and the breather plug (3).

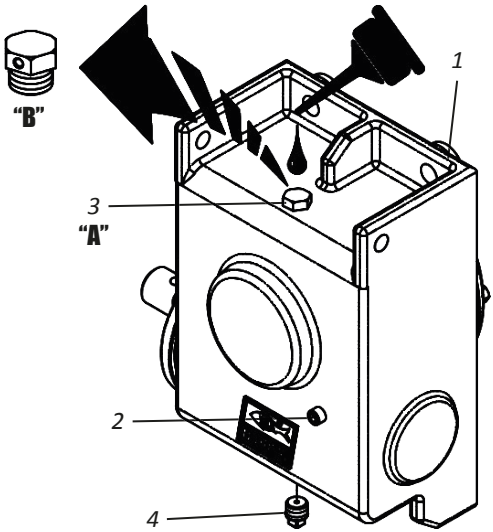

ATTENTION

Use 1.10 liters of oil. Do not put oil above level.
Do not fill with oil above the level. Only use the specified oil:
85W140 API GL-5 MIL- L-2105D SAEJ306; May/81.

IMPORTANT

Before putting the DCFr/DCFc into operation, remove the ("A") cap from the reduction gearbox and place the ("B") breather plug in its place.

OBSERVATION

Replace the oil in the first 200 hours of operation.
Next, change at every 1000 hours of operation.
When using a specific oil brand, avoid completing the oil level with brand and specification.

▪ Maintenance

• Transmission gearbox - Oil replacement

Periodically check the oil level of the transmission gearbox (1) through the screw indicating the level (2) and refill it whenever required. To perform the transmission gearbox oil change (1), proceed as follows:

01 - Take the drainage plug (4), the breather cap (3) and the level indicator screw (2) off letting all the oil from the transmission gearbox (1) drain out.

02 - Then, reinstall the drainage plug (4) and fill with the breather cap (3) to the oil leak through the level vent (2).

03 - Finish by replacing the level indicator screw (2) and the breather plug (3).

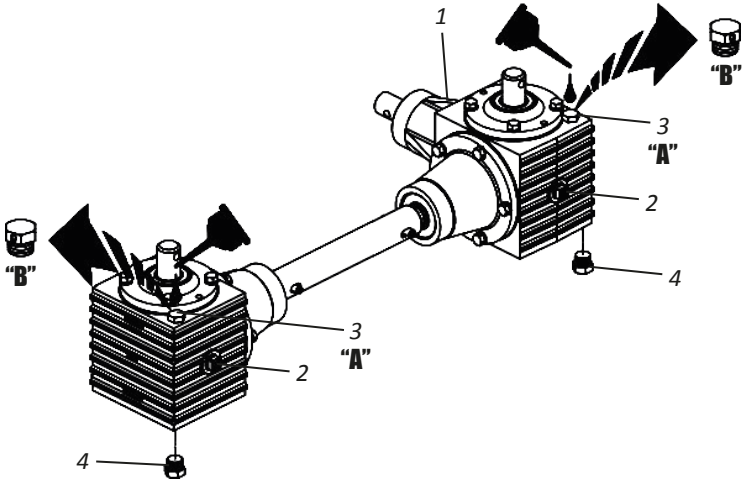

ATTENTION

Use 0.90 liters of 2-shaft gearbox oil.
Use 1.00 liters of 3-shaft gearbox oil.
Do not fill with oil above the level. Only use the specified oil:
85W140 API GL-5 MIL- L-2105D SAEJ306; May/81.

IMPORTANT

Before starting the DCFr, remove the caps ("A") from the gearboxes and put the breather plugs ("B") in their place.

OBSERVATION

Replace the oil in the first 200 hours of operation.
Next, change at every 1000 hours of operation.
When using a specific oil brand, avoid completing the oil level with brand and specification.

▪ Maintenance

• DCFr (Reducer transmission) reduction gearbox replacement - Part I

⚠ ATTENTION **Before starting the reduction gearbox change, make sure that the tractor is turned off. DO NOT replace reduction gearbox if tractor is on. Ignoring thiswarningmay cause serious injury or death.**

To change the reduction gearbox (1), proceed as follows:

01 - Loosen the cotter pin (2), remove the pin (3) and uncouple the cardan (4) from the reduction gearbox (1).

02 - Then loosen the cotter pin (5) and remove the fuse pin (6) to loosen the flanges (7).

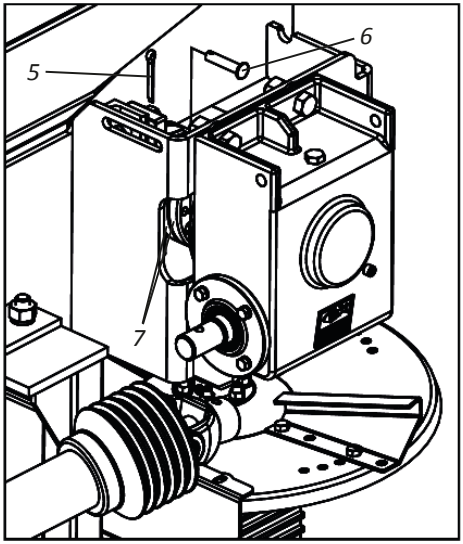

03 - Then, loosen the nuts (8), lock washers (9) and screws (10) and remove the reduction gearbox (1).

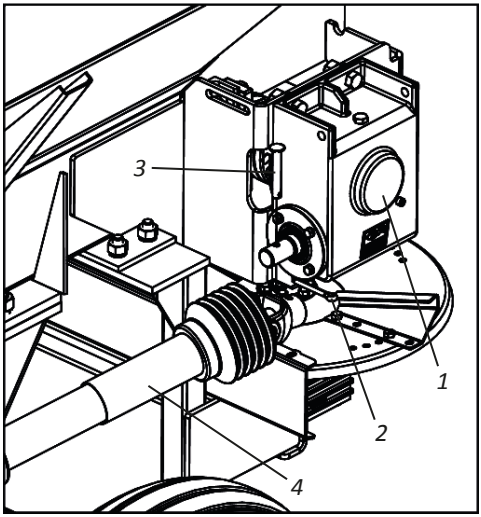

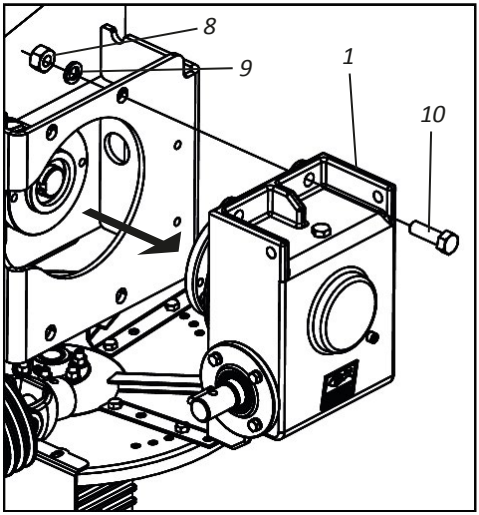

▪ Maintenance

• DCFr (Reducer transmission) reduction gearbox replacement - Part II

04 - Then, uncouple the flange (7) from the reduction gearbox (1).

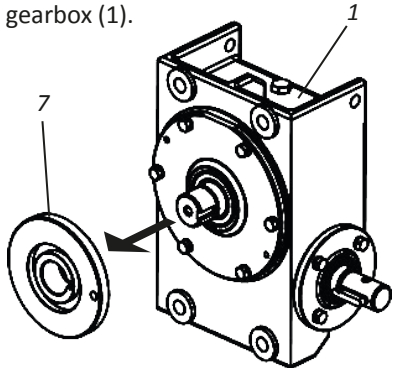

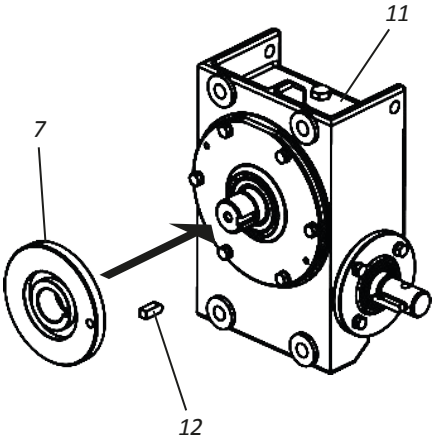

05 - Then, couple the flange (7) to the new reduction gearbox (11), securing it through the linchpin (12).

06 - Then, couple the new reduction gearbox (11) to the **DCFr/DCFc**, securing it through the screws (10), lock washers (9), and nuts (8).

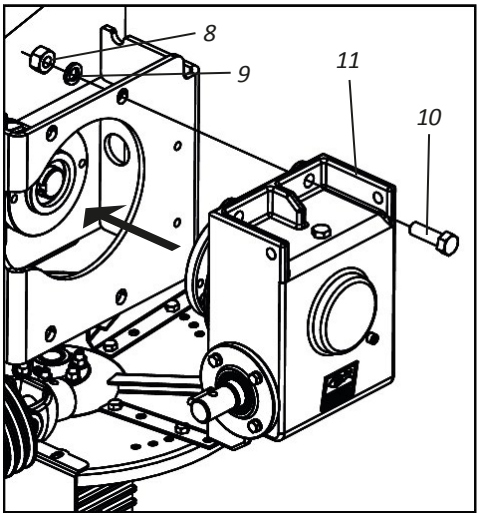

▪ Maintenance

- **DCFr (Reducer transmission) reduction gearbox replacement - Part III**

07 - Then, lock the flanges (7) through the fuse pin (6) and cotter pin (5).

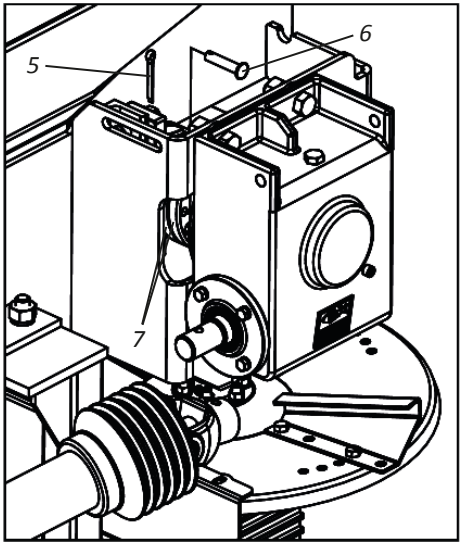

08 - Finish by coupling the cardan (4) to the new reduction gearbox (11), securing it through the pin (3) and cotter pin (2).

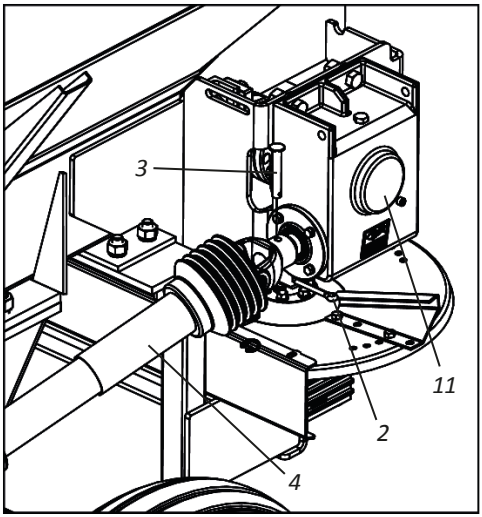

▪ Maintenance

• DCFc (Belt transmission) reduction gearbox replacement - Part I

⚠ ATTENTION **Before starting the reduction gearbox change, make sure that the tractor is turned off. DO NOT replace reduction gearbox if tractor is on. Ignoring thiswarningmay cause serious injury or death.**

To change the reduction gearbox, proceed as follows:

01 - Loosen the cotter pin (1), remove the pin (2) and uncouple the cardan (3) from the shaft (4).

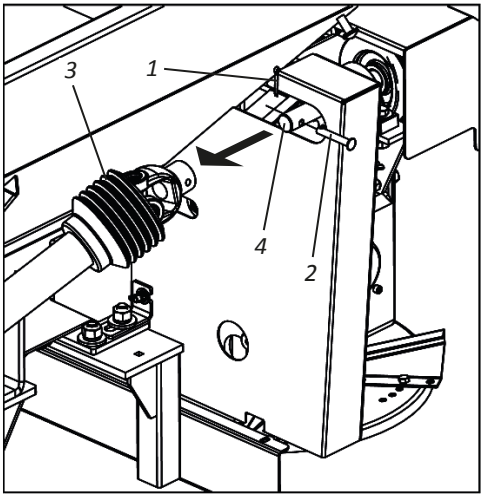

02 - Then, loosen the wing nut (5), lock washer (6), flat washer (7), screw (8), and remove the protective cover (9) and the chain (10).

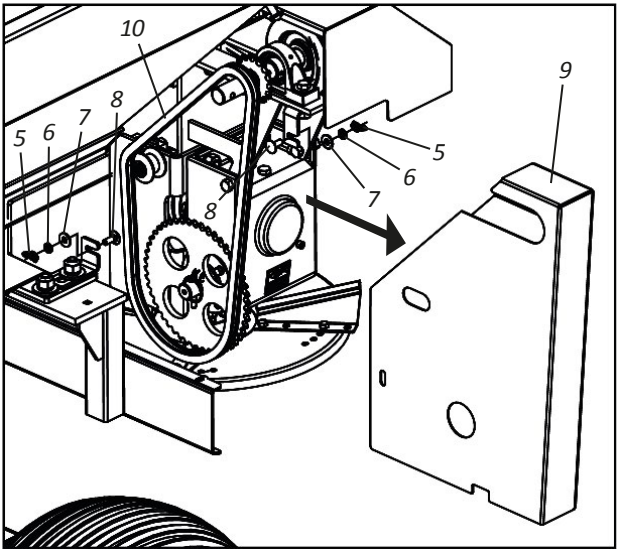

▪ Maintenance

- **DCFc (Belt transmission) reduction gearbox replacement - Part II**

03 - Then, loosen the handles (11), open the cover (12) and loosen the belt (13).

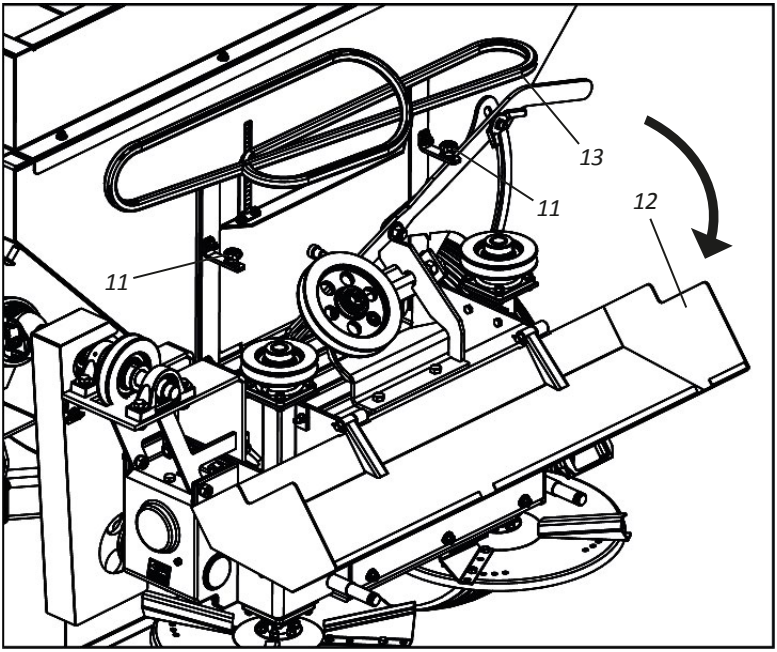

04 - Then, loosen the cotter pin (14) and remove the fuse pin (15) to loosen the flanges (16).

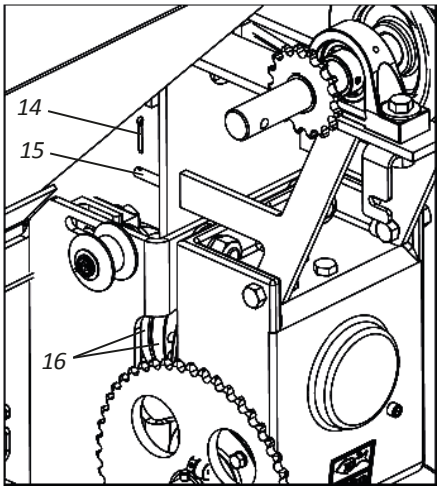

▪ Maintenance

• DCFc (Belt transmission) reduction gearbox replacement - Part III

05 - Then, loosen the screws (17), lock washers (18) and nuts (19).

06 - Then, loosen the screws (20), lock washers (21), nuts (22) and remove the bracket (23).

07 - Then, loosen the screws (24), lock washers (25), nuts (26) and remove the reduction gearbox (27).

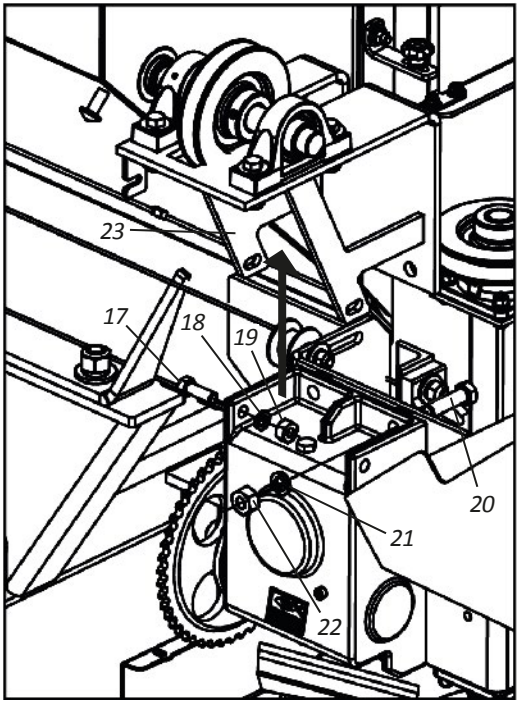

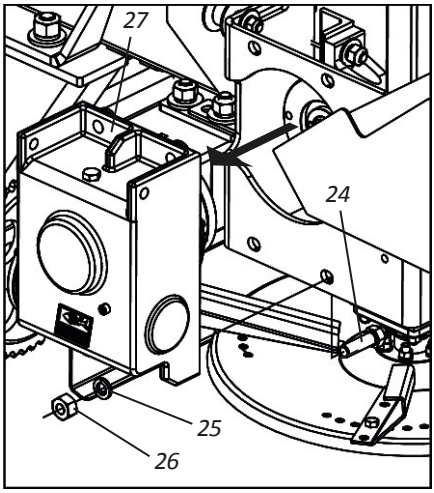

08 - Then, uncouple the flange (28) from the reduction gearbox (27).

09 - Then, couple the flange (28) to the new reduction gearbox (29), securing it through the linchpin (30).

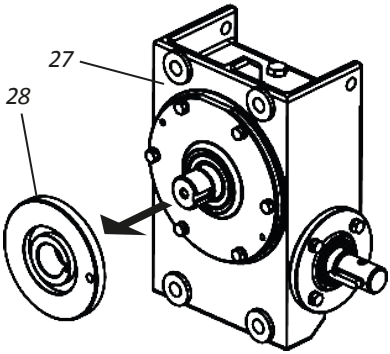

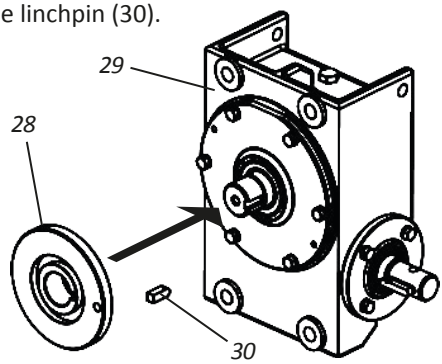

▪ Maintenance

• DCFc (Belt transmission) reduction gearbox replacement - Part IV

10 - Then, couple the new reduction gearbox (29) securing it through the screws (24), lock washers (25) and nuts (26).

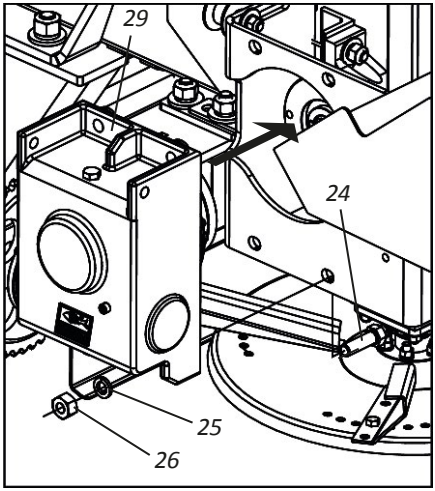

11 - Then, couple the bracket (23) securing it through the screws (20), lock washers (21), nuts (22) and screws (17), lock washers (18) and nuts (19).

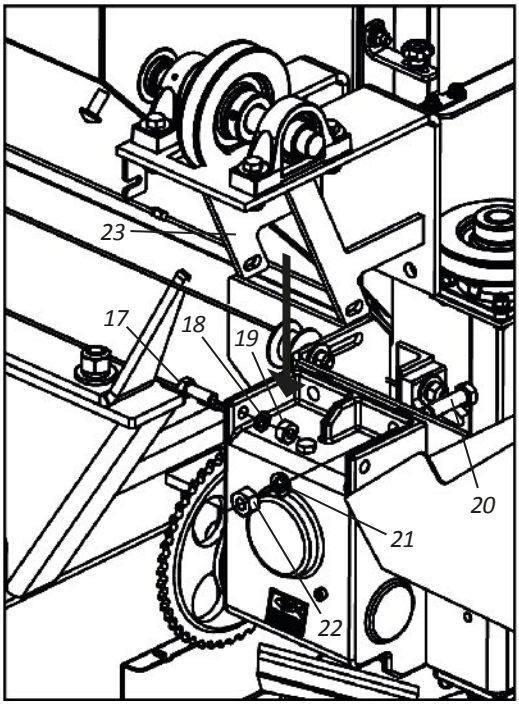

▪ Maintenance

• DCFc (Belt transmission) reduction gearbox replacement - Part V

12 - Then, lock the flanges (16) through the fuse pin (15) and the cotter pin (14).

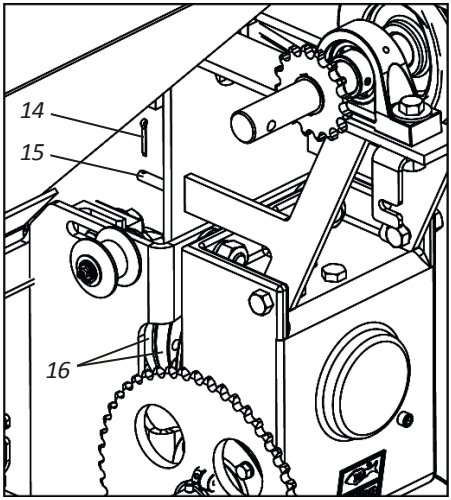

13 - Then, couple the belt (13), close the lid (12) and tighten the handles (11).

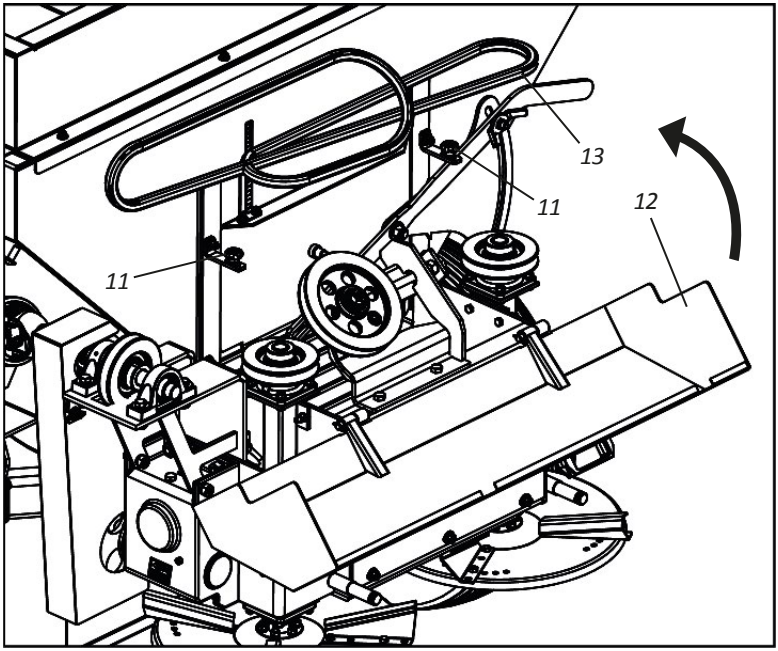

▪ Maintenance

- **DCFc (Belt transmission) reduction gearbox replacement - Part VI**

14 - Then, couple the chain (10) and couple the protective cover (9), securing it through the screws (8), flat washers (7), lock washers (6) and wing nuts (5).

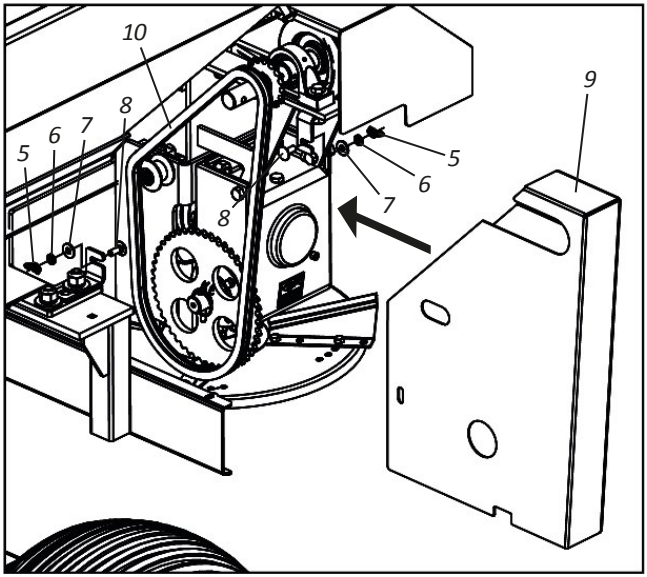

15 - Finish by coupling the cardan (3) to the shaft (4), securing it through the pin (2) and the pin (1).

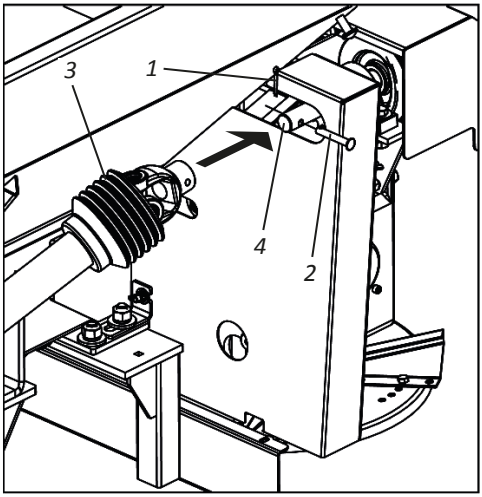

⚠ ATTENTION

Upon completing the assembly, before commencing work, perform a general overhaul and ensure that all components are correctly assembled.

▪ Maintenance

• Crown and pinion change (Reduction gearbox) - Part I

⚠ ATTENTION

Before changing the crown shaft and worm gear pinion, remove the reduction gearbox from the DCFr/DCFc as instructed on pages 55 to 57 for DCFr (Reducer Transmission) and pages 58 to 63 for DCFc (Belt Transmission). Then, drain all reduction gearbox oil as instructed on page 53.

To change the crown shaft and worm drive pinion of the reduction gearbox, proceed as follows:

01 - Loosen the large lid (1) of the reduction gearbox (2) through the screws (3) and lock washers (4). ***Note: Note that the retainer will be attached to the large lid (1) as shown in detail "A".***

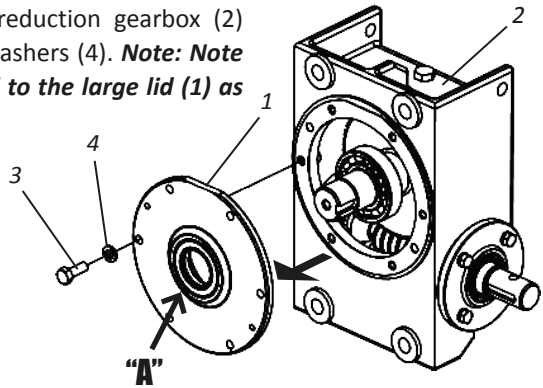

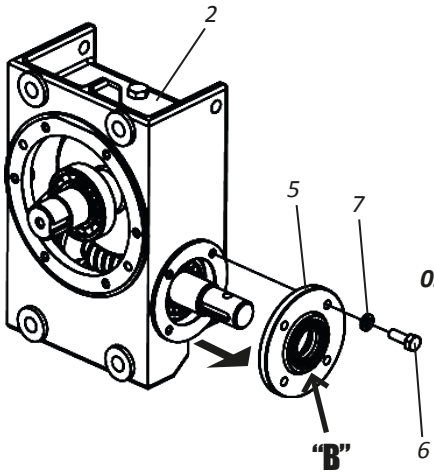

02 - Then, loosen the smaller cover (5) of the reduction gearbox (2) through the screws (6) and lock washers (7). ***Note: Note that the retainer will be attached to the smaller lid (5) as shown in detail "B".***

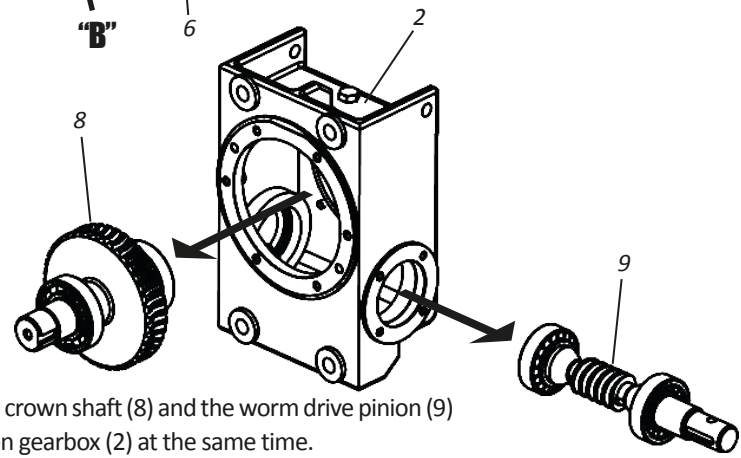

03 - Then, remove the crown shaft (8) and the worm drive pinion (9) from the reduction gearbox (2) at the same time.

▪ Maintenance

• Crown and pinion change (Reduction gearbox) - Part II

04 - Then, remove the old bearings (10) from the old crown shaft (8) and the worm gear pinion (9).

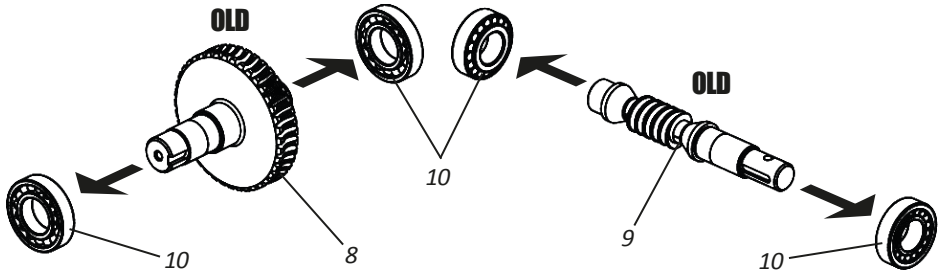

05 - Then, place the new bearings (10) on the new crown shaft (11) and worm gear pinion (12).

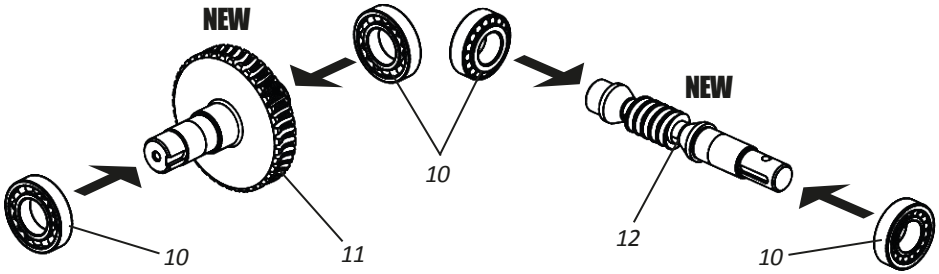

06 - Then, at the same time, replace the crown shaft (8) and the worm gear pinion (9) in the reduction gearbox (2), adjusting them.

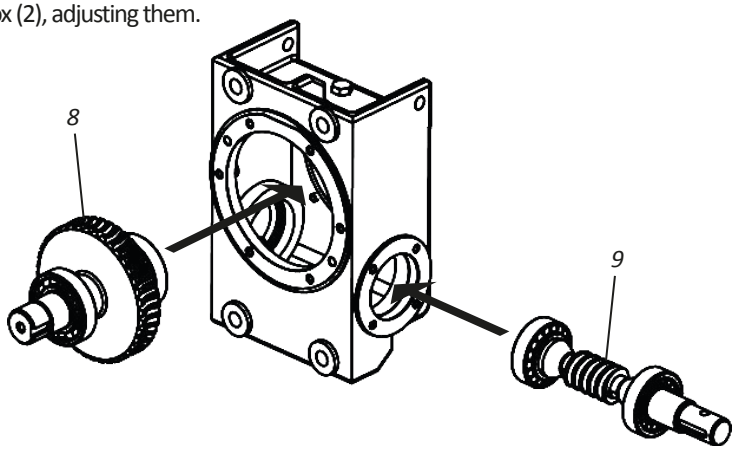

▪ Maintenance

• Crown and pinion change (Reduction gearbox) - Part III

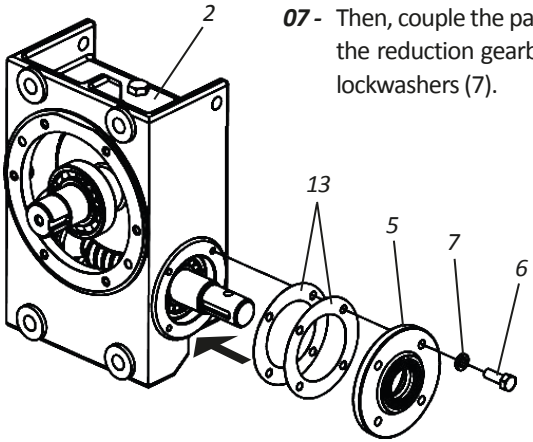

07 - Then, couple the paper gaskets (13) and the smaller cover (5) to the reduction gearbox (2) securing through the screws (6) and lockwashers (7).

08 - Finish by coupling the paper gaskets (14) and the large lid (1) of the reduction gearbox (2), securing them through the screws (3) and lockwashers (4).

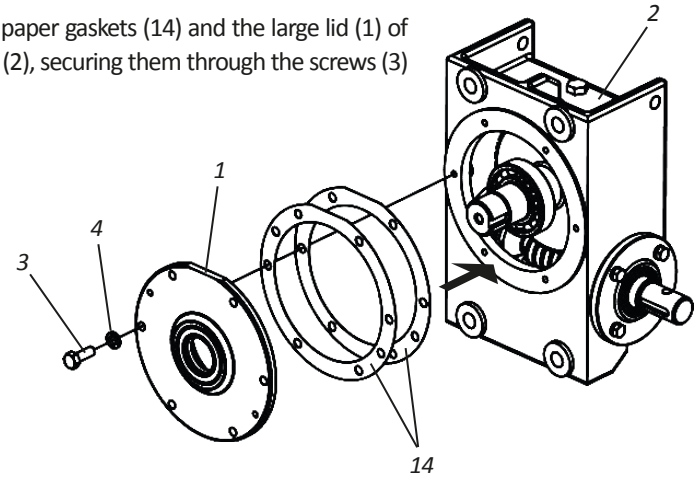

ATTENTION

After changing the crown shaft and the pinion worm gear, fill the reduction gearbox with oil as instructed on page 53. Then, couple the reduction gearbox to the DCFr/DCFc as instructed on pages 56 and 57.

IMPORTANT

When the reduction gearbox assembly (2) is finished if the smaller cover (5) and large lid (1) have gaps, replace the paper gaskets (13 and 14).

▪ Maintenance

• Operational maintenance

PROBLEMS	PROBABLE CAUSES	SOLUTIONS
There is no product flow on the discs or the amount is not enough.	The shut-off gate may be closed.	Check and take them out in it is the case.
	Foreign objects locking the conveyor.	Assemble the cardan correctly or replace the universal joint crosses with excessive wear.
	Conveyor, roller chain or broken fuse.	Retighten the bearings or replace them if they are damaged.
	Wrong Assembly of the gears.	Tension the conveyor belt.
Distribution of the product in the soil is not uniform.	Distance between one stroke and the other is too far.	Reduce the distance between the strokes and operate according to the recommended distance.
	Vanes wrong Position in the power distribution disks.	Check the position of the vanes if they are not inverted according to the rotating direction of the distributor discs. If they are inverted, proceed with their correct assembly.
	Rotating the power outlet.	Correct rotation in the PTO, which should be 540 RPM.
	Very strong wind.	Wait until the wind reduces or use the buffer (**optional**).
Distribution range too narrow.	Vanes Position in the power distribution disks.	Adjust the vanes on the discs for a more open position.
Recommended dosage is not obtained.	Dosage System. Work Speed above Recommended.	Increase gate flow. Reduce work speed.
Dosage higher than recommended.	Dosage System. Work Speed under Recommended.	Reduce gate flow. Adjust work speed to the recommended one.
Breaking the fuse frequently.	Conveyor operating at overspeed. Foreign objects locking the conveyor.	Reduce the belt speed and increase the gate flow. Check and proceed to clean the conveyor.

▪ Maintenance

• Operational maintenance

PROBLEMS	PROBABLE CAUSES	SOLUTIONS
Vibration or excessive noises during operation.	Foreign objects inside the **DCFr/DCFc**.	Check and take them out in it is the case.
	Wrong cardan assembly or worn out Universal Joint Cross.	Assemble the cardan correctly or replace the universal joint crosses with excessive wear.
	Loosen or damaged bearings.	Retighten the bearings or replace them if they are damaged.
	Conveyor adjustment.	Tension the conveyor belt.
	PTO Rotation.	Keep rotation in 540 rpm.
Breaking the fuse frequently.	Conveyor operating at overspeed. Foreign objects locking the conveyor.	Reduce the belt speed and increase the gate flow. Check and proceed to clean the conveyor.

▪ Maintenance

• Cares

01 - Before each work, check the condition of all pins and screws. Where necessary, retighten or replace them.

02 - The displacement speed should be carefully controlled according to the land´s conditions.

03 - **DCFr/DCFc** is used in several applications, requiring knowledge and attention during its handling.

04 - Only local conditions can determine the best operation method of **DCFr/DCFc**.

05 - When assembling or disassembling any part of **DCFr/DCFc**, employ proper methods and tools.

06 - Observe the lubrication intervals carefully in the various lubrication points of **DCFr/DCFc**. Respect the lubrication intervals.

07 - Always check if the parts have wears. If there is a need for replacement, always demand Baldan original parts.

! IMPORTANT | **The proper and periodical maintenance are necessary to guarantee the long life of DCFr/DCFc.**

• General cleaning

01 - When storing **DCFr/DCFc**, perform a general cleaning and thoroughly wash with water only. Make sure the paint has not worn out, if this has happened, give a general coat, apply the protective oil and fully lubricate the **DCFr/DCFc**. Do not use burned oil or other abrasive.

02 - At the end of the work, proceed as follows:

- Remove roller chains and retain them in oil until the next work.

03 - Completely lubricate the **DCFr/DCFc.** Check all moving parts of **DCFr/DCFc**, if they present wears or gaps, make the required adjustment or replace the parts, leaving the machine ready for the next work.

04 - In the period that you do not use **DCFr/DCFc**, clean the products waste which are still remaining after the use such as limestone, fertilizers, dirt, etc.

05 - Spray the entire **DCFr/DCFc** with castor oil or preservative oil, never use burned oil.

▪ Maintenance

• General cleaning

06 - Replace all adhesives, especially those about warnings, that are damaged or missing. Make everyone aware of the importance and risks of accidents when instructions are not followed.
07 - Clean the cardan every 15 days or sooner if necessary.
08 - Remove the protective caps, separate “tongue” from “groove”, wash and remove crusts, dry and lubricate the sliding parts with grease and reassemble.
09 - After all maintenance precautions, store your **DCFr/DCFc** in a plain surfaced, covered and dried location, away from animals and children.
10 - We recommend to wash the **DCFr/DCFc** with water only on the beginning of works.

⚠ ATTENTION | **Do not use abrasives or chemical products to wash DCFr/DCFc, it may damage its painting and adhesives.**

• Distributor preservation - Part I

To extend the service life and appearance of **DCFr/DCFc** longer, follow the instructions below:

01 - Wash and clean all distributor components during and at the end of the work season.
02 - Use neutral products to clean the distributor following the safety and handling guidelines provided by the manufacturer.
03 - Always carry out maintenance during the periods indicated in this manual.

• Distributor preservation - Part II

The practices and precautions below if adopted by the owner or operator make the difference for the conservation of **DCFr/DCFc.**

01 - Be careful when performing high-pressure washing; do not direct the water jet directly into the connectors and electrical components. Isolate all electrical components;
02 - Use only NEUTRAL detergent and water (pH equal to 7);
03 - Apply the product, following the manufacturer’s instructions strictly, on the wet surface and in the correct sequence, respecting the time of application and washing;

▪ Maintenance

04 - Stains and dirt not removed with the products should be removed with the aid of a sponge.

05 - Rinse the machine with clean water to remove any chemical residues.

06 - Do not use: - Detergents with a basic active ingredient (pH higher than 7) can damage/stain the paint on the distributor.

- Detergents with acid active ingredient (pH less than 7), act as stripper remover of zinc coating (the protection of parts against oxidation).

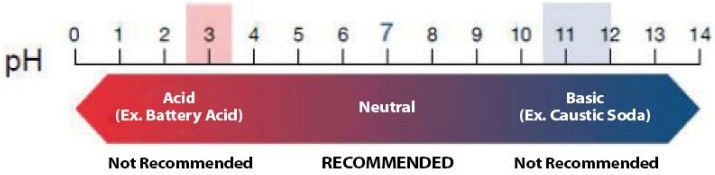

07 - Allow the machine to dry in the shade so that it does not accumulate water in its components. Very fast drying can cause stains on your paint.

08 - After drying, lubricate all chains and greases according to the recommendations in the operator's manual.

09 - Spray all the machine, especially the zinc parts, with protective oil, following the manufacturer's application guidelines. The protective also prevents dirt from adhering to the machine to the machine, facilitating subsequent washings

10 - Observe curing time (absorption) and application intervals as recommended by the manufacturer.

⚠ ATTENTION | **Do not use any other type of oil to protect the distributor (used hydraulic oil, "burnt" oil, diesel oil, castor oil, kerosene, etc.).**

! IMPORTANT | **We recommend the following protective oils:**
- Bardahl: Agro protective 200 or 300
- ITWChemical: Zoxol DW - Series 4000

OBSERVATION | **Ignoring the conservation measures mentioned above may result in the loss of warranty for painted or zinc-coated components which may exhibit oxidation (rust).**

▪ Optional

• Optional accessories - Part I

DCFr/DCFc 3000/6000/8000 has optional features which can be acquired according to the work requirement.

DRIVING GEARBOX - DCFR/DCFC 3000/6000/8000

The driver box is used for jobs where the application of the fertilizer should be directed in line, for example under canopies.

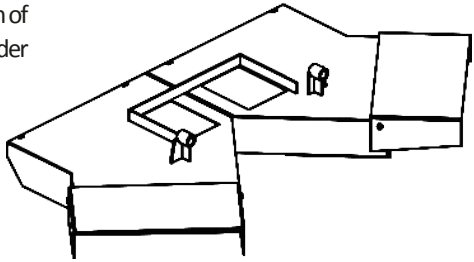

TIRES - DCFR/DCFC 3000/6000

For clay soil works, **DCFr/DCFc 3000/6000 c**an be optionally acquired with tires 11L-15.

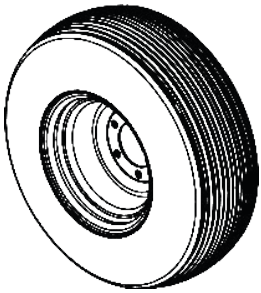

DEFLECTOR WITH CANVAS - DCFR/DCFC 3000/6000/8000

The baffle with tarpaulin is used for the distribution of powdered products mainly when there are occurrences of winds. The use of a deflecting device ensures greater uniformity in the distribution, retaining the product.

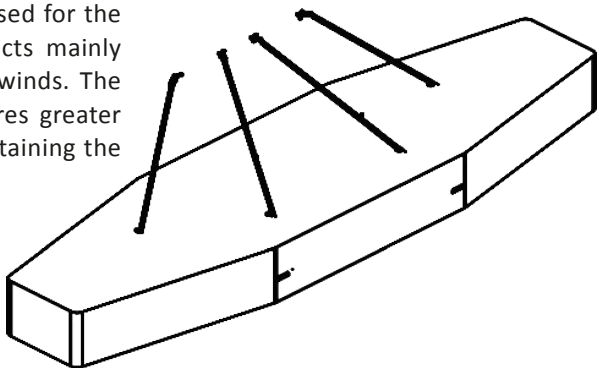

▪ Optional

• Optional accessories - Part II

DCFr/DCFc 3000/6000/8000 has optional features which can be acquired according to the work requirement.

EXTENSION BED - DCFR/DCFc 6000

Extension bed can be optionally purchased to increase the load capacity of the **DCFr/DCFc 6000** into **DCFr/DCFc 8000.**

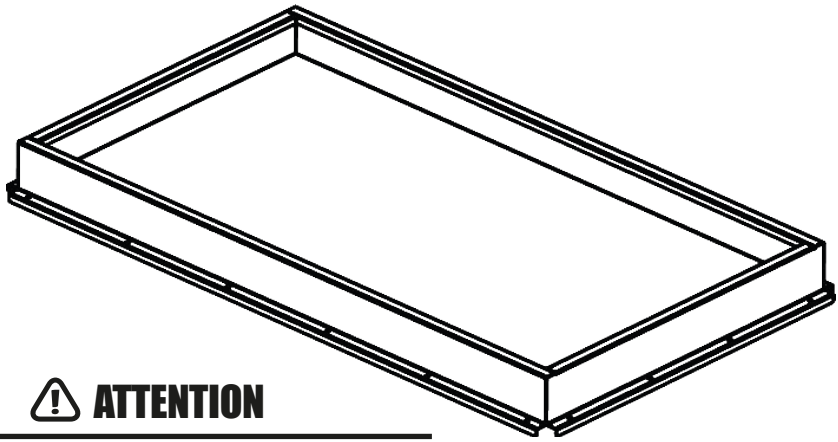

⚠ ATTENTION

To use the extension bed, the DCFr/DCFc 6000 must be fitted with 11L-15 tires. Do not use the extension bed with other tire models.

Identification

• Identification plate

To consult the parts catalogue or request Baldan technical assistance, always identify the the model (1), serial number (2) and manufacture date (3), which can be found on the **DCFr/DCFc** identification plate.

ATTENTION

The drawings in this Instruction Manual are merely illustrative.

CONTACT

In case of doubts, never operate or handle your equipment without referring to Post-Sales.
Telephone: 0800-152577
e-mail: posvenda@baldan.com.br

PUBLICATIONS

Code: 60550106461 | CPT: DCF12819A

▪ Identification

• Product identification

Please make the correct identification of the data below, to always have information about the service life of your equipment.

Owner: _____

Dealer: _____

Property: _____

City: _____

State: _____

Certificate of Warranty no.: _____

Implement: _____

Serial No: _____

Purchase Date: _____

Invoice: _____

▪ Notes

▪ Notes

Certificate of Warranty

BALDAN IMPLEMENTOS AGRÍCOLAS S/A ensures the dealer normal performance of the implement for a period of six (6) months as of the delivery date on the retail invoice to the first final consumer. During this period, **BALDAN** undertakes to repair defects in material and/or of manufacture of its liability, including labor, freight and other expenses of the dealer's liability.

In the warranty period, request and replacement of eventual defective parts shall be made to the dealer of the area, who will submit the faulty piece for **BALDAN** analysis. When this procedure is not possible and the resolving capacity of the dealer is exhausted, the dealer will request the support of **BALDAN Technical Assistance** through a specific form distributed to dealers. After analyzing the replaced items by Baldan Technical Assistance, and concluding that it is not a warranty, then the dealer will be responsible for the costs related to the replacement; as well as material expenses, travel including accommodation and meals, accessories, lubricant used and other expenses arising from the call out to Technical Assistance, and Baldan company is authorized to carry the respective invoice in the name of the resale. Any repair carried in the product within the dealer warranty deadline will only be authorized by **BALDAN** upon previous budget presentation describing parts and work to be performed.

The product is excluded from this term if it is repaired or modified by representatives not belonging to the **BALDAN** dealer network, as well as the application of non-genuine parts or components to the user's product. This warranty is void where it is found that the defect or damage is caused by improper use of the product, failure to follow instructions or inexperience of the operator.

It is agreed that this warranty does not cover tires, polyethylene tanks, cardan, hydraulic components, etc., which are equipment guaranteed by their manufacturers. Manufacturing and/or material defects, object of this warranty term, will not constitute, under any circumstances, grounds for termination of a purchase agreement, or for indemnification of any nature.

BALDAN reserves the right to change and/or perfect the technical characteristics of its products, without previous notice, and without obligation to proceed in the same way with the products previously manufactured.

▪ Inspection and Delivery Certificate

SERVICE BEFORE DELIVERY: This implement was carefully prepared by the sale organization, with all its parts inspected according to the manufacturing prescriptions.

DELIVERY SERVICE: The user was informed about the current warranty terms and instructed on the usage maintenance precautions.

I confirm that the user has been informed about the current warranty terms and instructed on the usage maintenance precautions.

Implement: _____ Serial Number: _____

Date: _____ Tax Number: _____

Dealer: _____

Telephone: _____ CEP: _____

City: _____ State: _____

Owner: _____

Telephone: _____

Address: _____ Number: _____

City: _____ State: _____

E-mail: _____

Sale date: _____

Signature / Dealer Stamp _____

1st copy - Owner

▪ Inspection and Delivery Certificate

SERVICE BEFORE DELIVERY: This implement was carefully prepared by the sale organization, with all its parts inspected according to the manufacturing prescriptions.

DELIVERY SERVICE: The user was informed about the current warranty terms and instructed on the usage maintenance precautions.

I confirm that the user has been informed about the current warranty terms and instructed on the usage maintenance precautions.

Implement: _____ Serial Number: _____

Date: _____ Tax Number: _____

Dealer: _____

Telephone: _____ CEP: _____

City: _____ State: _____

Owner: _____

Telephone: _____

Address: _____ Number: _____

City: _____ State: _____

E-mail: _____

Sale date: _____

Signature / Dealer Stamp _____

2nd copy - Dealer

▪ Inspection and Delivery Certificate

SERVICE BEFORE DELIVERY: This implement was carefully prepared by the sale organization, with all its parts inspected according to the manufacturing prescriptions.

DELIVERY SERVICE: The user was informed about the current warranty terms and instructed on the usage maintenance precautions.

I confirm that the user has been informed about the current warranty terms and instructed on the usage maintenance precautions.

Implement: _____ Serial Number: _____

Date: _____ Tax Number: _____

Dealer: _____

Telephone: _____ CEP: _____

City: _____ State: _____

Owner: _____

Telephone: _____

Address: _____ Number: _____

City: _____ State: _____

E-mail: _____

Sale date: _____

Signature / Dealer Stamp _____

3rd copy - Manufacturer (Please send completed within 15 days).

1.74.05.0059-5

AC MATÃO
ECT/DR/SP

RESPONSE CARD

NO STAMPING IS REQUIRED

THE STAMP WILL BE PAID BY:

BALDAN IMPLEMENTOS AGRÍCOLAS S/A.
Av. Baldan, 1500 | Nova Matão | CEP: 15993-900 | Matão-SP. | Brasil
Tel: (16) 3221-6500 | Fax: (16) 3382-6500
www.baldan.com.br | email: sac@baldan.com.br
Export: Tel: +55 (16) 3221-6500 | Fax: +55 (16) 3382-4212 | 3382-2480
email: export@baldan.com.br

BALDAN

Avenida Baldan, 1500
Nova Matão
15.993-900
Matão/SP - Brasil
sac@baldan.com.br
export@baldan.com.br

+55 16 3221 6500
baldan.com.br