Instruction
Manual

SPDE-A

No Till Seed Drill Special

BALDAN

PRESENTACIÓN

We appreciate your purchase and congratulate you for the excellent choice you just made because you have purchased a product manufactured with technology from **BALDAN IMPLEMENTOS AGRÍCOLAS S/A.**

This instruction manual will guide you through the procedures that are necessary since its acquisition up to the operating procedures of use, security and maintenance.

BALDAN ensures that has delivered this farming implement to the dealer in perfect conditions.

The dealer is responsible for the custody and maintenance of this farming implement and also for the assemblage, retightening, lubrication and overhaul.

In the technical delivery, the dealer must advise the user on its maintenance, security, its obligations under any technical assistance, the strict observance of the guarantee and reading of the instruction manual.

Any request for technical assistance under warranty should be made to the dealer where it was purchased.

We reiterate the need for careful reading of the Warranty Certificate and observance of all items in this instruction manual, as doing so, the useful life of your farming implement will increase.

Instruction
Manual

SPDE-A

No Till Seed Drill Special

BALDAN IMPLEMENTOS AGRÍCOLAS S/A.
CNPJ: 52.311.347/0009-06
Insc. Est.: 441.016.953.110

Scan the QR Code on the identification plate of your device and access this Instruction Manual online.

BALDAN

TABLE OF CONTENTS

WARRANTY **8**
Product Warranty *8*
GENERAL INFORMATION **9**
Owner *9*
SAFETYRULES ..... **10 - 12**
WARNINGS **13**
COMPONENTS **14**
SPDE-A - No Till Seed Drill Special *14*
TECHNICAL SPECIFICATIONS **15**
Coupling Head Assembly (Figures 02/03) *16*
Roller Assembly (Figure 04) *17*
Assembly of the Fine Seeds Box (Pasture) - Optional (Figures 05/06) ..... *17 - 18*
Assembly of the Hydraulic System w/o Marker w/o Side Transport (Figure 07) *19*
Optional Front Line Marker Assembly (Figure 08/09/10) ..... *20 - 21*
Side Transport Assembly - Optional (Figures 11/12/13/14/15) ..... *22 - 24*
Assembly of the Hydraulic System for Side Transport - Optional (Figure 16) *25*
COUPLER **26**
Coupling to the Tractor (Figure 17) *26*
LEVELING **27**
Leveling of the Seeder (Figure 18) *27*
TRANSPORT **28**
Procedure for Transport (Figures 19/20/21/22) *28*
WORK **29**
Procedure for Work (Figures 23/24/25/26) *29*
Fixation And Wheel Articulation System (Figure 27) *30*
WORK / TRANSPORT **30**
Using the Ladder (Figures 28) *30*
ADJUSTMENTS **31**
Adjusting Of The Line Markers (Figure 29) *31*
Adjusting Of The Line Marker Discs (Figure 30) *32*
Adjusting Of The Line Marker Bar Figure 31) *32*
Finishing System (Figure 32) *33*
Seed Regulation (Figures 33/34 / Table 02)) *34*
SEED DISTRIBUTION SYSTEM **34**
Seed Regulation (Figures 33/34) - Continued *35*
Regulation for Seed Distribution (Figures 35) ..... *35 -36*
To Calculate the Amount of Fertilizer and Seed *36*
Regulation Of The Fine Seed Box (Pasture) - Optional (Figures 36 / Table 04) *37*
Independent System Fertilizer Conductor (Figures 37/38 ..... *38*

FERTILIZER DISTRIBUTION SYSTEM **38**
Independent System Fertilizer Conductor (Figures 37/38) *38*
Fertisystem Fertilizer Distribution System - Optional (Figures 39/40) *39*
Speed Box (Figure41) *40*
Regulation For Fertilizer Distribution (Figure 42) *40*
Fertilizer Distribution Table per Hectare 20/31 - SPDE -A 7000 (Table 05) *41*
Distribution Table for Fertilizer per Hectare 31/20 - SPDE -A 7000 (Table 06) *42*
CALCULATION **43**
Practical Calculation for Fertilizer Distribution *43*
Practical Test To Assess The Quantity Of Fertilizer And Seed Distribution *44*
PLANTING LINES *45*
Optional Lines Models (Figures43) *45-47*
Pressure Adjustment of Springs (Figure 44 / T able 08) *48*
Limiters (Table 09) *49*
Depth Limiter Flange (Figure 45) *49*
Adjustment Of The "V" Compactor Wheel (Figure 46) *49*
Adjustment Of The Iron Compactor Wheel - Optional (Figures 47) *50*
Adjustment Of The Ridged Or Plain Cutting Disc (Figures 48) *51*
Adjustment Of The Double Disk Cleaners (Figure 49) *51*
Counterweights (Figures 50 / Table 10) *52*
OPERATION ***52***
Recommendations for Operation *53*
MAINTENANCE ***54***
Tire Pressure (Figure 51) *54*
Lubrication *54*
Table of Grease and Equivalents (Table 11) *54*
Lubricate Every 10 Hours Of Work (Figures 52) *55*
Lubricate Every 10 Hours Of Work - Continuation (Figures 52) *56*
Lubricate Every 30 Hours Of Work (Figures 53) *57*
Lubricate Every 60 Hours Of Work (Figures 54) *57*
Lubricate Every 200 Hours Of Work (Figures 55 ..... *58*
Chain tension (Figure 56) *58*
Oscillating Tensioner (Figure 57) *58*
Operational Maintenance (Table 12) *59*
Care *60*
General Cleaning *60*
Cleaning The Fertisystem Driver (Figures 58) *61*
Fertisystem Driver Maintenance Tube (Figures 59) *62*
Fertisystem Conductor Blocking Tube (Figures 60) *63*
Spring And Caps (Optional) Fertisystem Driver (Figures 61) *63*

TABLE OF CONTENTS

TABLE OF CONTENTS

Cpl Iron Compactor Wheel Cart - Optional (Figures 62) *64*
Cpl Compactor Wheels - Optional (Figures 63) *64*
OPTIONALS **64**
Flange Limiter w/ Cleaner (Figures 64) *65*
Optional Cpl Digital Hectare Counter (Figure 65) *66*
Optional Semi-Hydraulic Rear Side Transport Kit (Figure 66) *66*
Fine Seeds Box Cpl - Optional (Figures 67) *67*
Cpl Line Marker System w/Steering (Figure 68) *67*
IDENTIFICATION **68**
Product Identification (Figures 69) *68*
NOTES **69**
CERTIFICATE **70**
Warranty Certificate ..... *70 - 72*

PRODUCT WARRANTY

BALDAN IMPLEMENTOS AGRÍCOLAS S/A ensures normal operation of the tool to the dealer for a period of six (6) months from the delivery date on the resale invoice to the first end consumer

During this period **BALDAN** undertakes to remedy defects in materials and/or workmanship of their responsibility, and the labour, freight and other expenses of the responsibility of the dealer.

During the warranty period, the order and replacement of any defective parts must be made to the dealer in the region, who will send the defective part for analysis at **BALDAN.**

When such a procedure is not possible and exhausted the resolution capacity of the dealer, the dealer will request support from the Technical Assistance of **BALDAN** through the specific form distributed to resellers.

After analysing the items replaced by the Technical Assistance of BALDAN, and concluded that it is not a warranty issue, so it will be of responsibility of the reseller any costs related to replacement; as well as the cost of materials, travel including accommodation and meals, accessories, lubricant and other expenses resulting from the call to the service, with the **BALDAN** company being authorised to make its billing on behalf of the reseller.

Any repairs made to the product that is within the warranty period of the dealer will only be authorized by **BALDAN** with prior presentation of the budget describing the work of parts and labor to be performed

It is excluded from this term the product that is repaired or modified in shops that do not belong to the dealer network of **BALDAN**, as well as the use of non-genuine parts or components in the product of the customer

This guarantee will be void when it is determined that the defect or damage is the result of improper product use, failure to follow instructions or the inexperience of the operator.

It is agreed that this warranty does not cover tires, polyethylene tanks, drive shafts, hydraulic components, etc., which is equipment guaranteed by their manufacturers.

Manufacturing and or material defects, object of this warranty term, will not constitute, under any circumstances, a reason for termination of the purchase and sale contract or compensation of any nature.

BALDAN reserves the right to modify and or improve the technical characteristics of its products without notice and without obligation so to proceed with the products previously manufactured.

GUARANTEE

OVERVIEW

OWNER

BALDAN IMPLEMENTOS AGRÍCOLAS S/A is not liable for any damage caused by accidents arising from the use, transportation or improper or incorrect storage of your tool, whether due to negligence and/or inexperience of any person.

Only persons with full knowledge of the tractor and the tool may carry out the transportation and operation of the same.

BALDAN shall not be liable for any damage caused in unforeseeable or unrelated situations to the normal use of the tool.

.

The mishandling of this equipment can result in serious or fatal accidents. Before putting the equipment into operation, please read the instructions in this manual. Ensure that the person responsible for the operation is instructed in the correct and safe handling of it. Also make sure that the operator has read and understood the instruction manual of the product.

NR-31 - SAFETY AND HEALTH AT WORK IN AGRICULTURE, FORESTRY, FOREST EXPLORATION AND AQUACULTURE

The purpose of this Regulatory Standard is to establish the precepts to be observed in the organization and in the work environment, in a manner compatible with the planning and development of agriculture, livestock, forestry, forestry exploration and aquaculture activities with safety and health and work environment.

OWNER OR OPERATOR OF THE EQUIPMENT.
Please read and follow the NR-31 standard carefully.

.

For more information, check the website and read the full NR-31.
http://portal.mte.gov.br/legislacao/normas-regulamentadoras-1.htm

ETHIS SYMBOL INDICATES AN IMPORTANT SAFETY WARNING. PLEASE READ THIS MANUAL CAREFULLY WHEN YOU COME ACROSS IT BE AWARE OF THE CONTENT AHEAD AND PAY ATTENTION TO THE POSSIBILITY OF PERSONAL ACCIDENTS.

ATTENTION

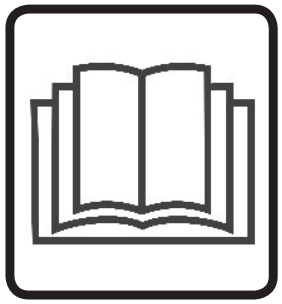

- Read the instruction manual carefully for recommended safety practices.

ATTENTION

- Only start the tractor when you are properly seated and the seat belt is locked.

ATTENTION

- Do not operate the tractor if the front is light. If there is a tendency to lift, add weights to the front or front wheels.

ATTENTION

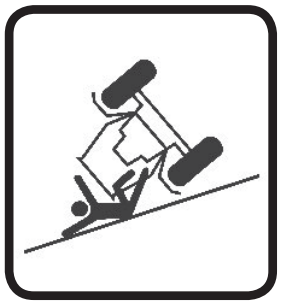

- There are risks of serious injury by overturning when working on slopes.
- Do not use excessive speed.

ATTENTION

- Do not carry personnel on the tractor and neither inside nor on the equipment

ATTENTION

- Before carrying out any maintenance on your equipment, make sure that it is properly stationary. Avoid getting run over..

SAFETY NORMS

SAFETY NORMS

ATTENTION

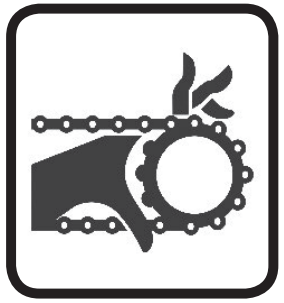

- When doing any services on the seeder transmission, first switch off the tractor.
- Do not make adjustments with the seeder in operation.

ATTENTION

- When operating the seeder do not allow that people be on the machine.
- Do not stay on the platforms with the seeder in operation.

ATTENTION

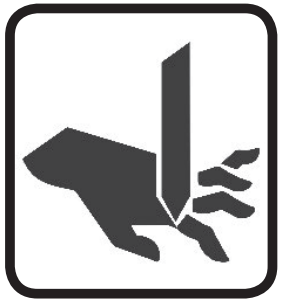

- Keep yourself away from the moving elements of the seeder (Discs), as they are sharp and can cause accidents.
- When making any service on the discs wear safety gloves on your hands.

ATTENTION

- The hydraulic oil is pressurized and can cause serious injury if leaks occur. Periodically check the conservation status of the hoses. If there is any evidence of leakage, replace immediately.
- Before you connect or disconnect the hydraulic hoses, relieve the system pressure by triggering the command with the tractor off.

ATTENTION

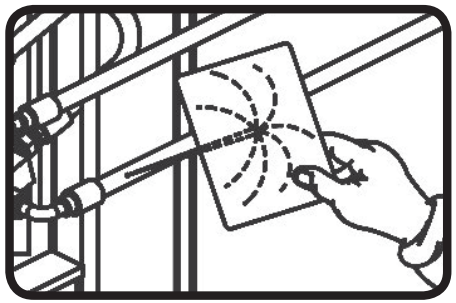

- When looking for a leak in the hoses, use a piece of cardboard or wood, never use your hands.
- Avoid fluids going into the skin.

THIS SYMBOL INDICATES AN IMPORTANT SAFETY WARNING. IN THIS MANUAL, WHENEVER YOU FIND IT, PLEASE READ THE MESSAGE BELOW CAREFULLY AND BE ATTENTIVE TO THE POSSIBILITY OF PERSONAL ACCIDENTS.

ATTENTION

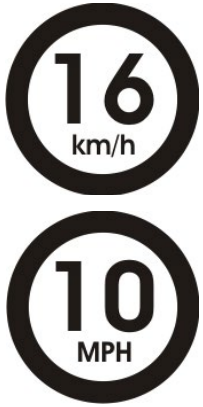

- When transporting this seeder, do not exceed the speed of 16km/h or 10 MPH, thus avoiding risk of damage or accidents.

ATTENTION

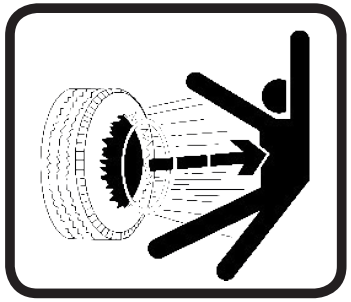

- Never weld the wheel with the tire mounted, the heat may cause increased air pressure and cause the tire to explode.
- When filling the tire, position yourself next to the tire, never in front of it.

ATTENTION

- Do not make adjustments with the seeder in operation.
- When performing any service on the seeder, switch off the tractor

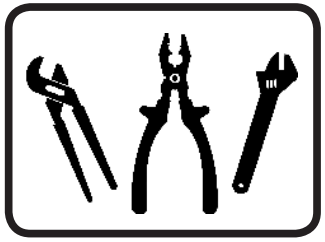

ATTENTION

- Check the oil level daily.
- Change the oil from the gearbox after the first 30 hours, and after that, every 1500 hours when using mineral oil ISO BV 150 at 40°C (amount of oil used is 1.8 litres).
- Use only an original factory fuse because only it has controlled hardness.

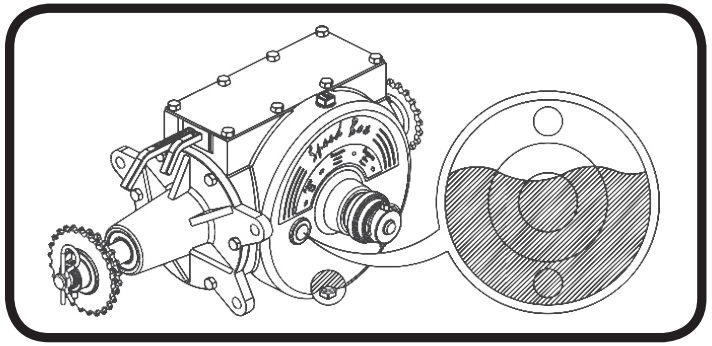

THIS SYMBOL INDICATES AN IMPORTANT SAFETY WARNING. IN THIS MANUAL, WHENEVER YOU FIND IT, PLEASE READ THE MESSAGE BELOW CAREFULLY AND BE ATTENTIVE TO THE POSSIBILITY OF PERSONAL ACCIDENTS.

SAFETY NORMS

WARNINGS

01 - When operating the equipment, do not allow people to stay very close to it or on it.

02 - When making any assembly and dismantling service on the discs wear gloves on your hands.

03 - Do not wear loose clothing as it can curl up on the equipment.

04 - When operating the tractor's engine, be properly seated on the operator's seat and be aware of the complete working of the tractor for both the tractor and the tool. Always turn the gearshift lever to neutral, disconnect the power socketand put the hydraulic controls to the neutral position.

05 - Do not run the engine indoors without adequate ventilation, as the exhaust gases are harmful to health.

06 - - When maneuvering the tractor to couple the implement, make sure that you have the necessary space and that there are no people very close Always perform maneuvers in a low gear and be prepared to brake in an emergency.

07 - Do not make adjustments with the tool in operation.

08 - When working on sloping terrains, proceed with caution when trying to maintain the necessary stability. In the event of imbalance, reduce the throttle, turn the tractor wheels towards the downslope of the terrain.

09 - - Always drive the tractor at speeds compatible with safety, especially when working in rough terrain or slopes. Always keep the tractor engaged.

10 - When driving the tractor on roads, keep the brake pedals connected and use safety signs.

11 - Do not operate the tractor if the front is light. If there is a tendency to lift, add weights at the front or on the front wheels.

12 - When leaving the tractor put the gear lever in neutral and apply the parking brake.

13 - Alcoholic drinks or some types of medication can generate a loss of reflexes and change the physical conditions of the operator. Therefore, never **e**operate this under the effect of these substances.

14 - Read or explain all of the above to the user who can not read.

In case of doubt, consult the After Sales Service
Telephone: *0800-152577 / E-mail: posvenda@baldan.com.br*

SPDE-A
NO TILL SEED DRILL SPECIAL

1 - Amount
2 - Spring Rod
3 - Regulator
4 - Hoses Support
5 - Leaf Spring Shackle
6 - Coupling head
7 - Hydraulic Hoses
8 - Line drive cylinder
9 - Telescopic Driver
10 - Speed Box
11 - Line
12 - Support Arm
13 - Cutting Disc
14 - Tire Activation Cylinder
15 - Manual Container
16 - Tires
17 - Seed Regulator
18 - Platform
19 - Platform Handrail
20 - Fertilizer Storage
21 - Seed Storage

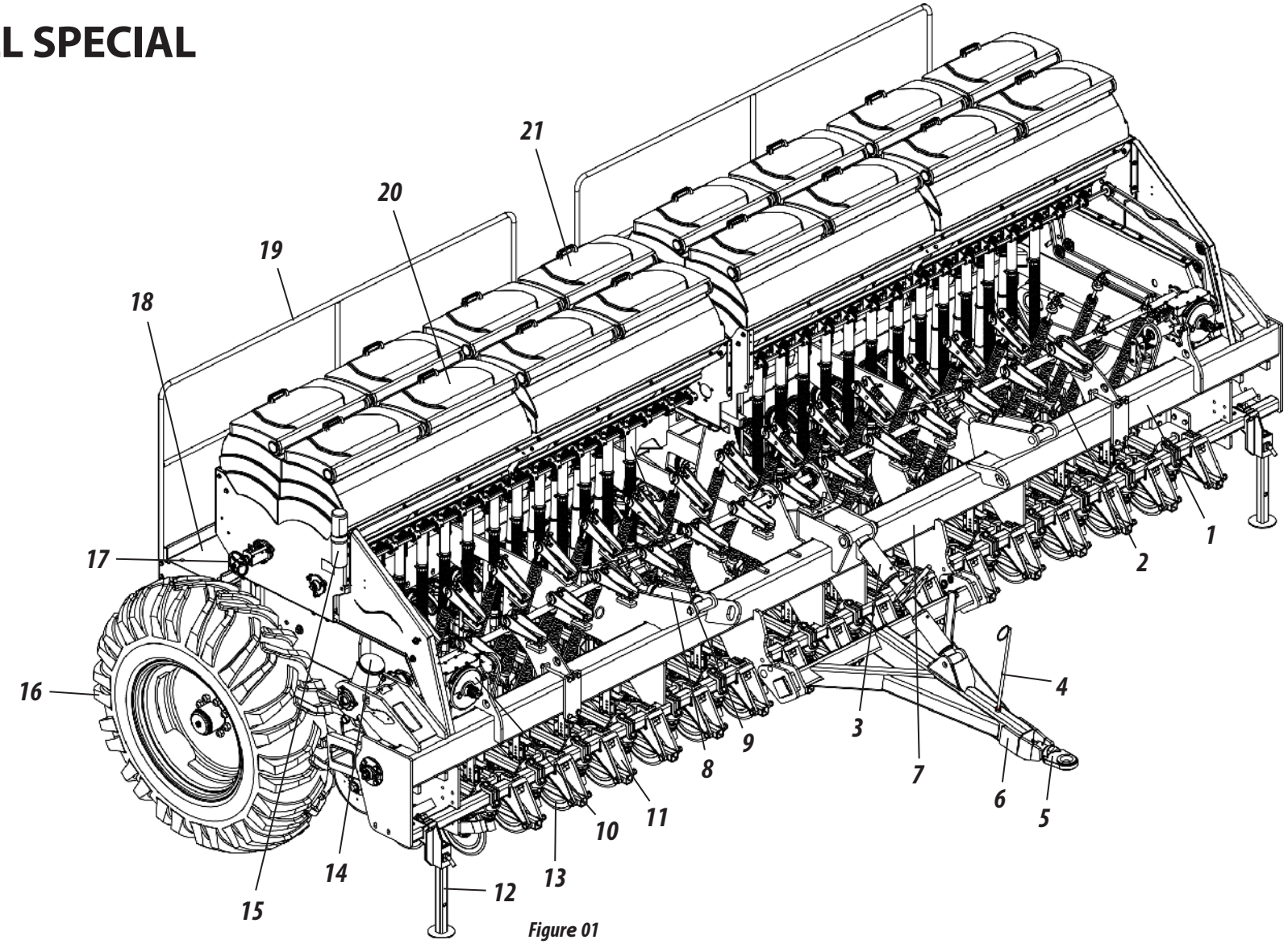

Figure 01

COMPONENTS

TECHNICAL SPECIFICATIONS

Table 01

Model	No. of Lines	Width Useful (mm)	Width Total (mm	Width of Work (mm)	Tank Capacity of Fertilizer (L)		Tank Capacity of Seeds (L)		Capac. Storage of Fine Seeds (L)	Weight (Approx.) (kg	Power (Approx.) (Hp)
					Metalic	Plastic	Metalic	Plastic			
SPDE-A 7000	32	5270	7070	5440	1282	1320	938	1128	216	7480	140*

Working Depth (mm) ..... 0 - 120
Total Height (mm) 2300
Minimum spacing between lines (mm) 170
Amount of Water in the Tires (L) ..... 3/4"
Overall Length (mm) 4300
Rodeiro ..... 18.4 x 30 x 12 L

(*) Approximate power (hp) depends on the normal conditions for planting and may vary according to the type of soil, topography, etc.

Baldan reserves the right to modify and or improve the technical characteristics of its products without notice and without obligation so to proceed with the products previously manufactured. The technical specifications are approximate and informed in normal working conditions.

The **SPDE -A l**eaves the factory semi-assembled, lacking only the mounting of some components, to be mounted as indicated below:

COUPLING HEAD ASSEMBLY (FIGURES 02/03)

To mount the coupling head (1) to the **SPDE-A**, proceed as follows:

1- Insert the coupling head (1) into the working position, removing the (2), the pins (3) that have been placed for the transport of the seeder.

Figure 02

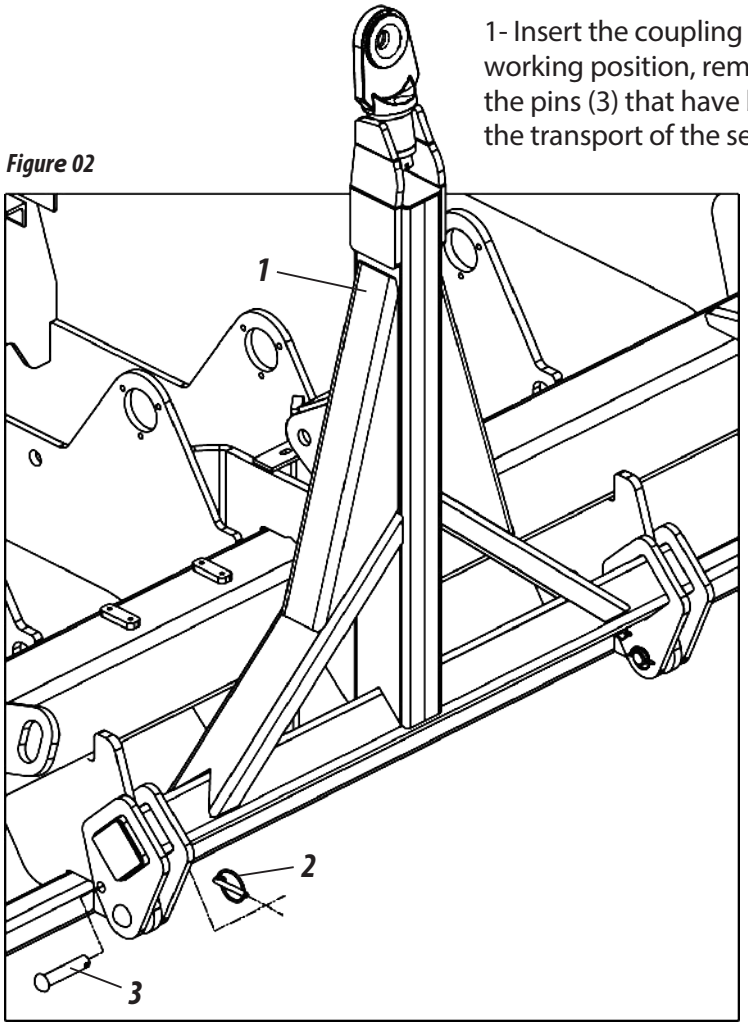

2- Then insert the adjuster (4) into the coupling head (1), securing it with the pin (5) and locking ring (6) and the mount (7) with pin (8) and latch with ring (9).

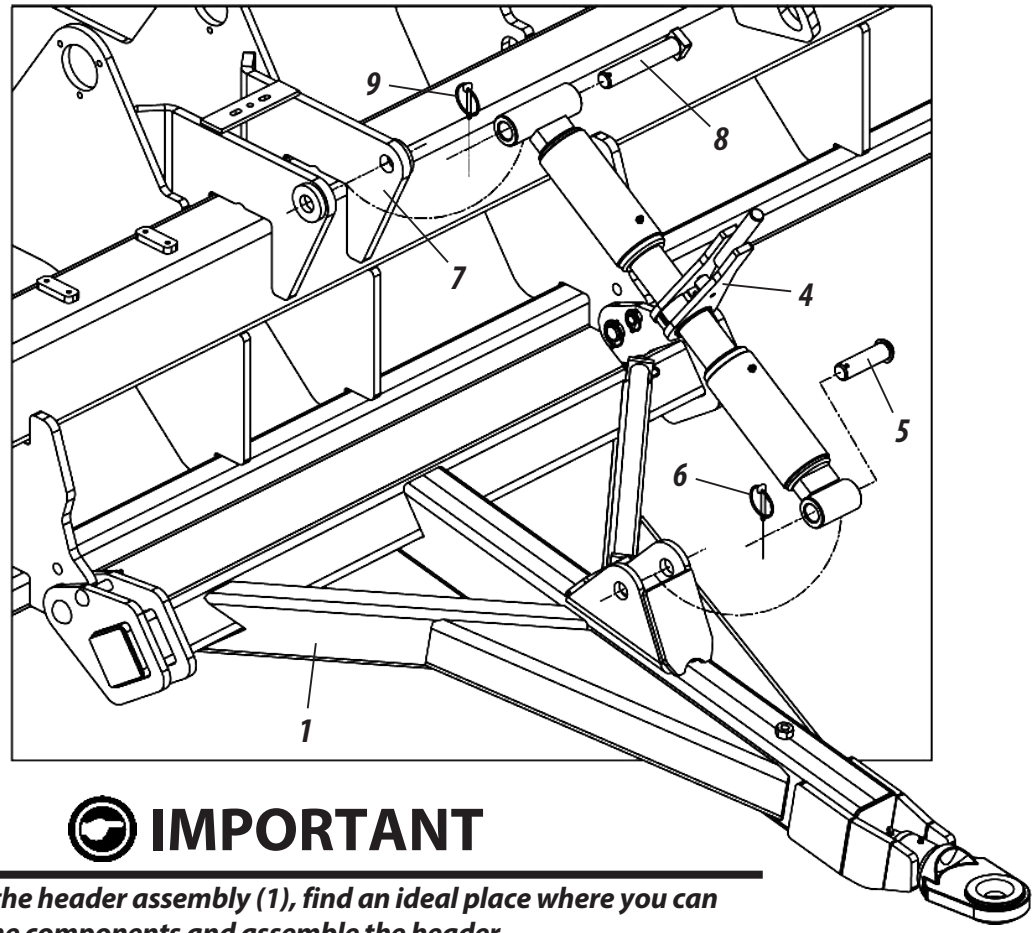

Figure 03

IMPORTANT

Before starting the header assembly (1), find an ideal place where you can easily identify the components and assemble the header.

ASSEMBLY

ROLLER ASSEMBLY (FIGURE 04)

To mount the "V" wheel holder (1), proceed as follows:

1- Attach the "V" wheel bracket (1) on line (2), securing it through the bolts (3), lock washers (4) and nuts (5).

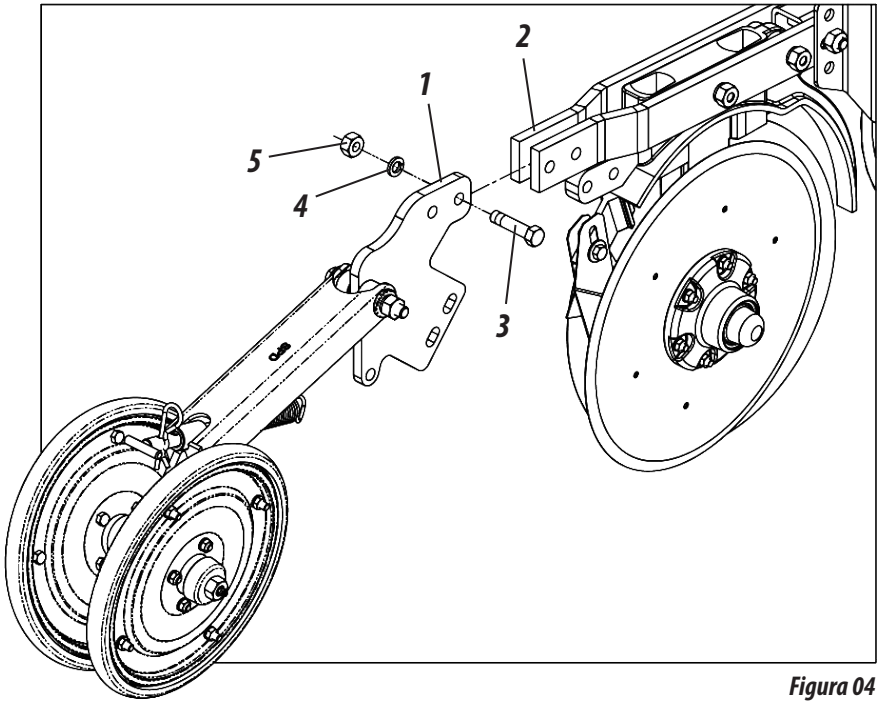

Figura 04

NOTE

Repeat the above procedure to assemble the other lines of the seeder.

ASSEMBLY OF THE FINE SEEDS BOX (PASTURE) - OPTIONAL PART I (FIGURES 05/06)

To assemble the fine seed box (1), proceed as follows:

1- First, secure the plates (2) on the tank support (3) through the bolts (4), plain washers (5), lock washers (6) and nuts (7).

Figures 05

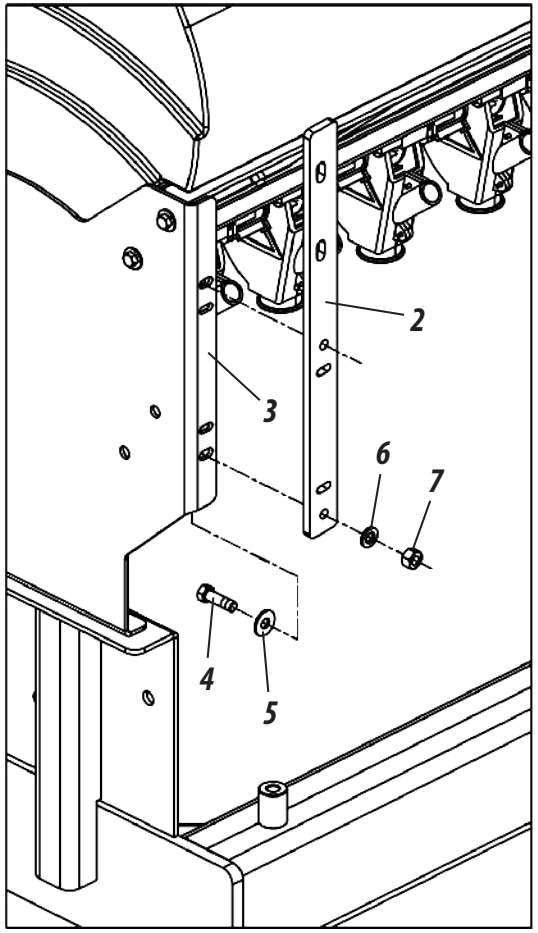

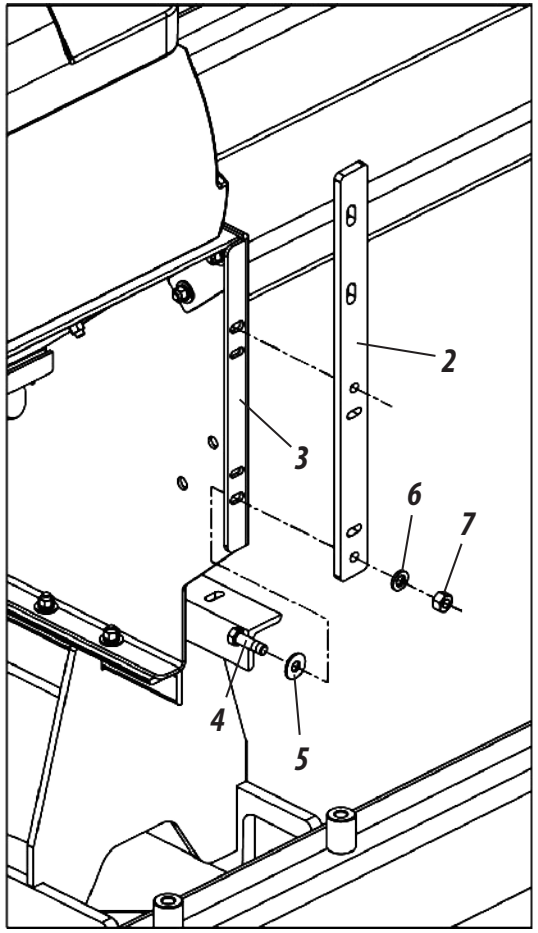

ASSEMBLY OF THE FINE SEEDS BOX (PASTURE) - OPTIONAL PART II (FIGURES 05/06)

2- Then secure the fine seed box (1) to the plates (2) using bolts (8), plain washers (9), spring washers (10) and nuts (11).

3- Then secure the tensioner (12) on the tank support (3) through the plain washer (13), washer (14) and nut (15).

4- Then, secure the tensioner (16) through the bolt (17), flat washer (18), washer (19) and nut (20).

5- Then place the chain (21) between the gears of the fine seed box and seed shaft, tension the chain through the tensioners (12 and 16).

6- Finish by attaching the protective cap (22) to the plates (2) through the screws (23), plain washers (24), pressure washers (25) and butterfly nuts (26).

7- Finish by attaching the hose (27) to the transmission box (28).

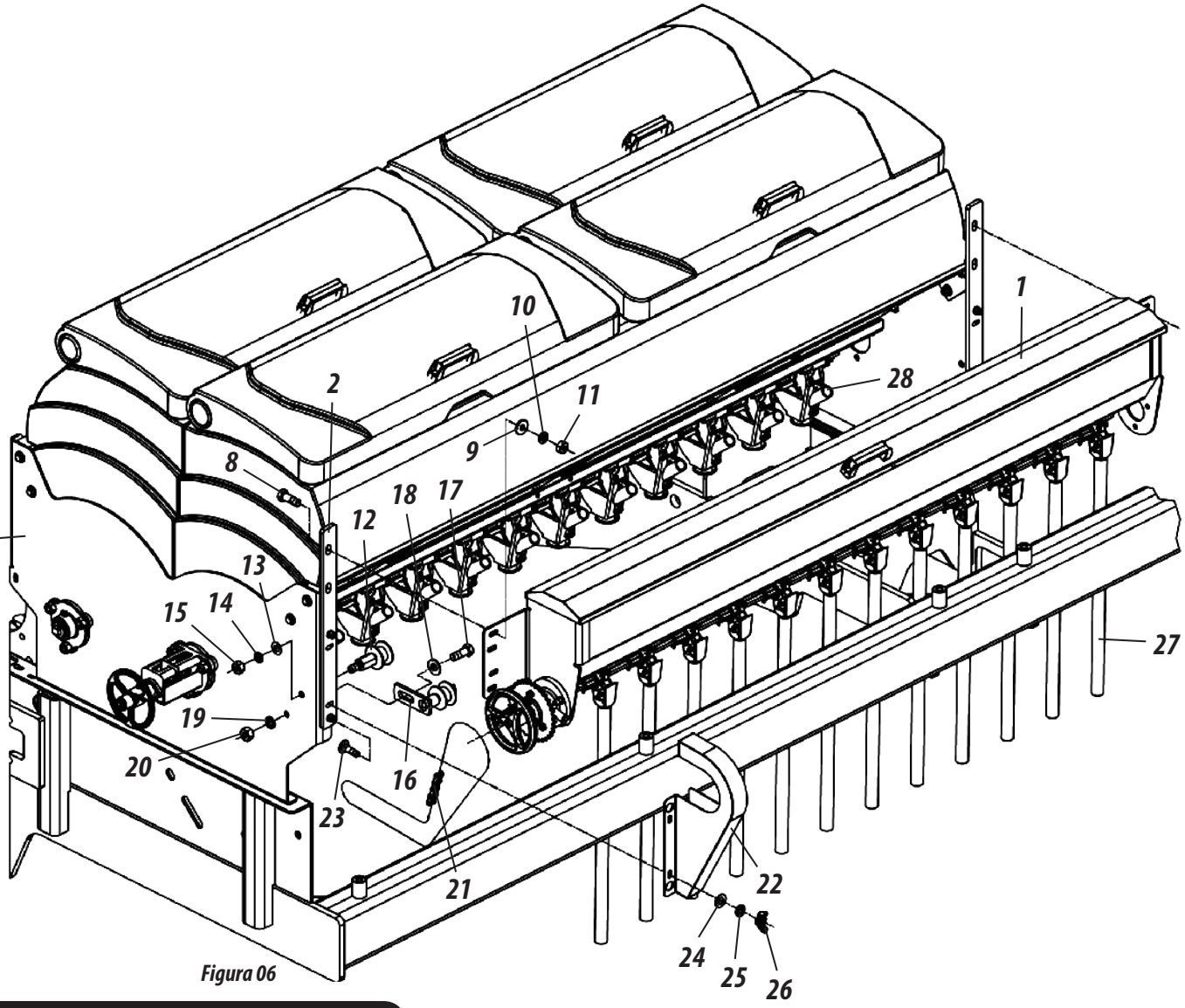

Figura 06

⚠ ATTENTION

When completing the fine seed box assembly (1), make a general inspection of the seeder, check that there are no objects (nuts, bolts or other) inside the tanks. Retighten all bolts and nuts, check all pins, cotter pins and latches, check all hoses.

ASSEMBLY

ASSEMBLY OF THE HYDRAULIC SYSTEM W/O MARKER W/O SIDE TRANSPORT (FIGURE 07)

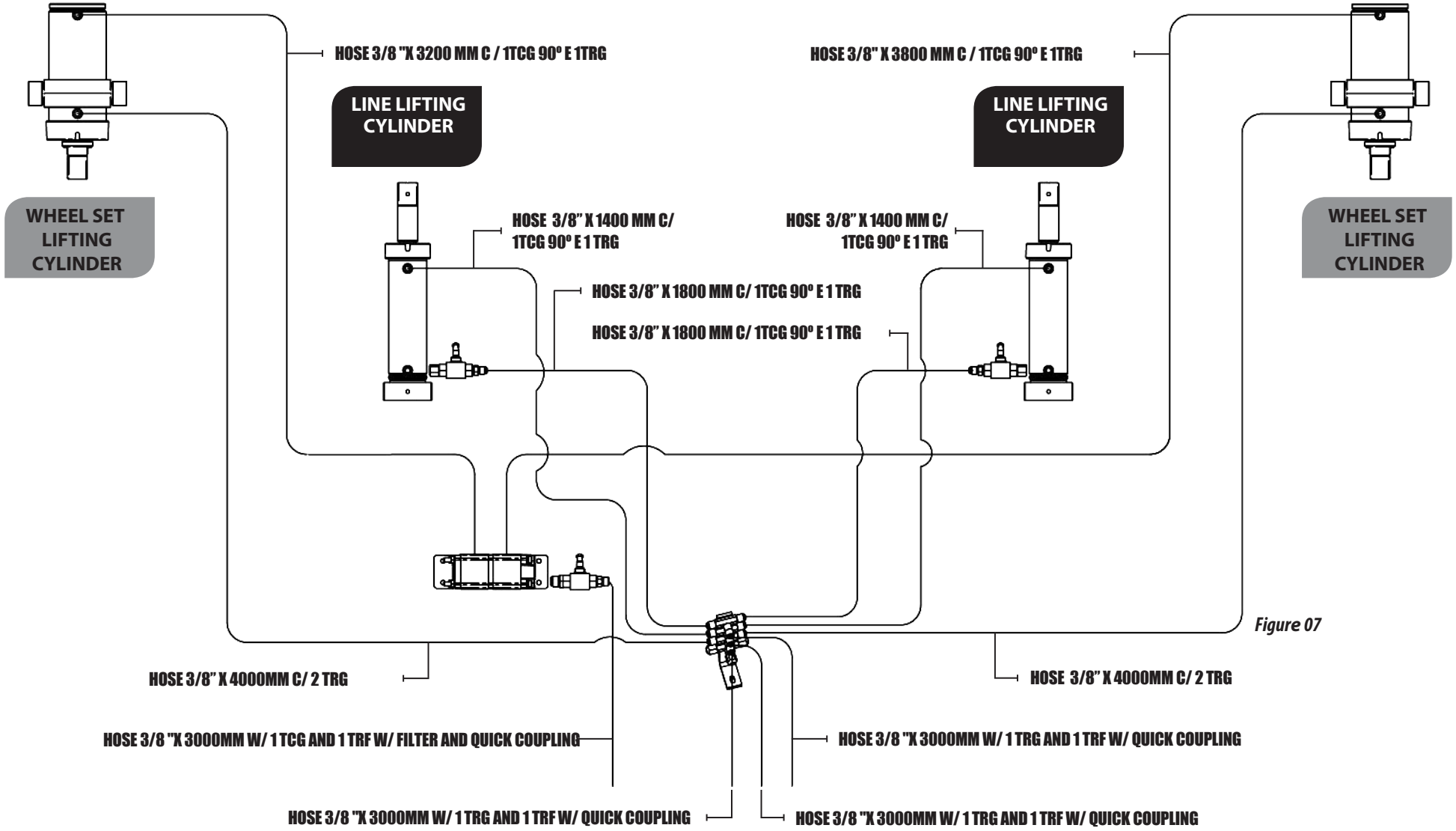

Figure 07

FRONT LINE MARKER ASSEMBLY - OPTIONAL - PART I (FIGURE 08/09/10)

Toassemblethefrontlinemarker(optional),proceedasfollows:

1- Attach the bracket (1) to the support (2) through the bolts (3), lock washers (4) and nuts (5).

2- Then secure the steering (6) on the support (1) through the bushings (7), screws (8), spring washers (9) and nuts (10).

3- Then insert the bar (11) into the steering (6) and fix it with the screw (12).

4- Attach the hydraulic cylinders (13) to the steering (6) through the pin (14), flat washer (15) and cotter pin (16) and the hydraulic cylinder rods with pin (17), flat washer (18) and (19).

5- Finally, secure the chain (20) through the pressure washer (21) and bolt (22).

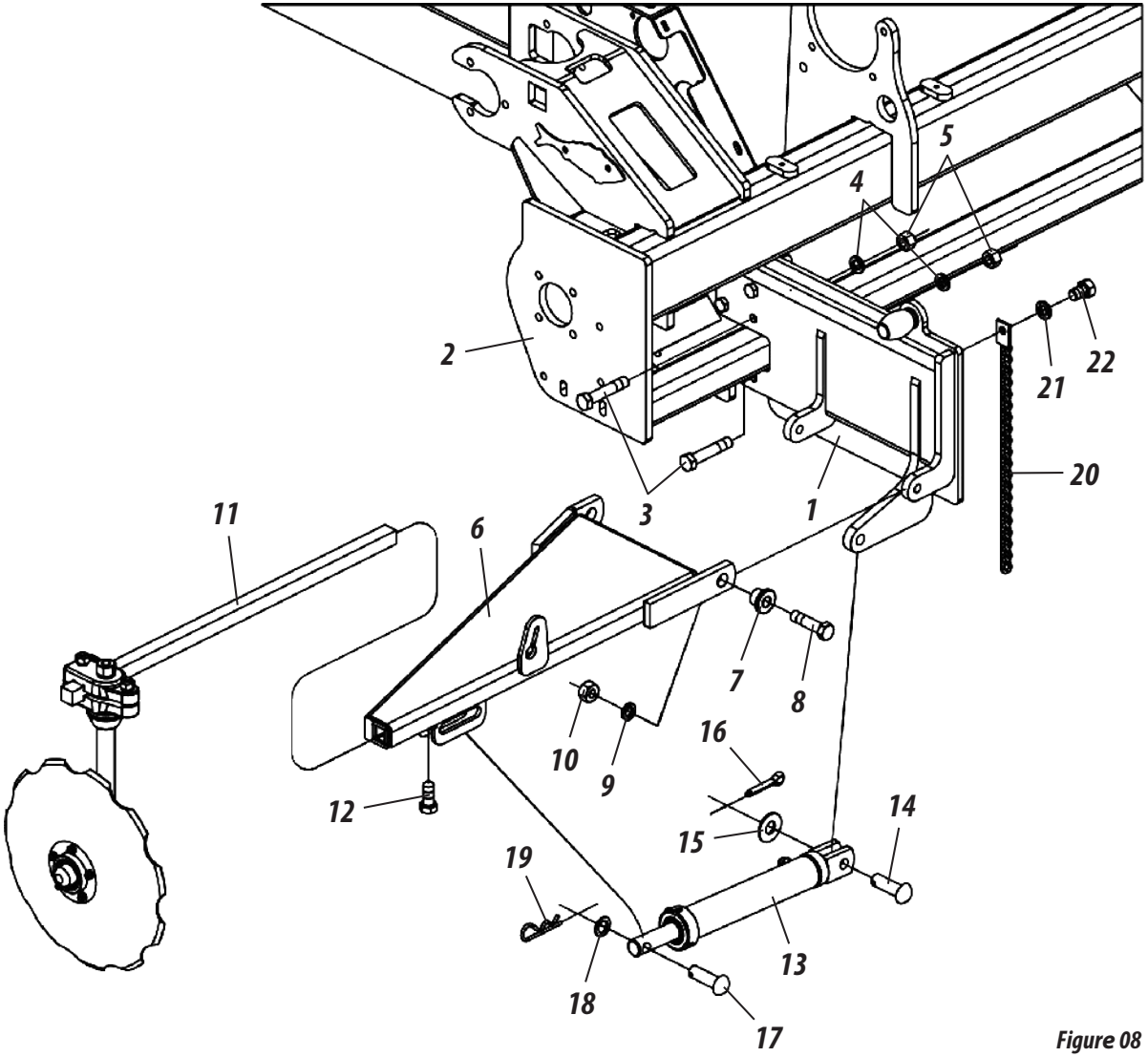

Figure 08

NOTE

When you finish setting up the front right line marker, repeat the above procedure to assemble the left front line marker. When finalizing the markers assembly, assemble the hydraulic system as instructed on the following page.

ASSEMBLY

FRONT LINE MARKER ASSEMBLY - OPTIONAL - PART II (FIGURE 08/09/10)

After assembling the line markers, assemble the hydraulic system, and for this, proceed as follows:

1- Attach the valve (23) on the mount (24) through the bolts (25), pressure washers (26) and plain washers (27).

2- Then, attach the hydraulic hoses (28 and 29) to the valve (23). 3- Then, attach the hydraulic hoses (28 and 29) to the hydraulic cylinders (30 and 31).

4- Finish by attaching the hydraulic hoses (32) to the tractor.

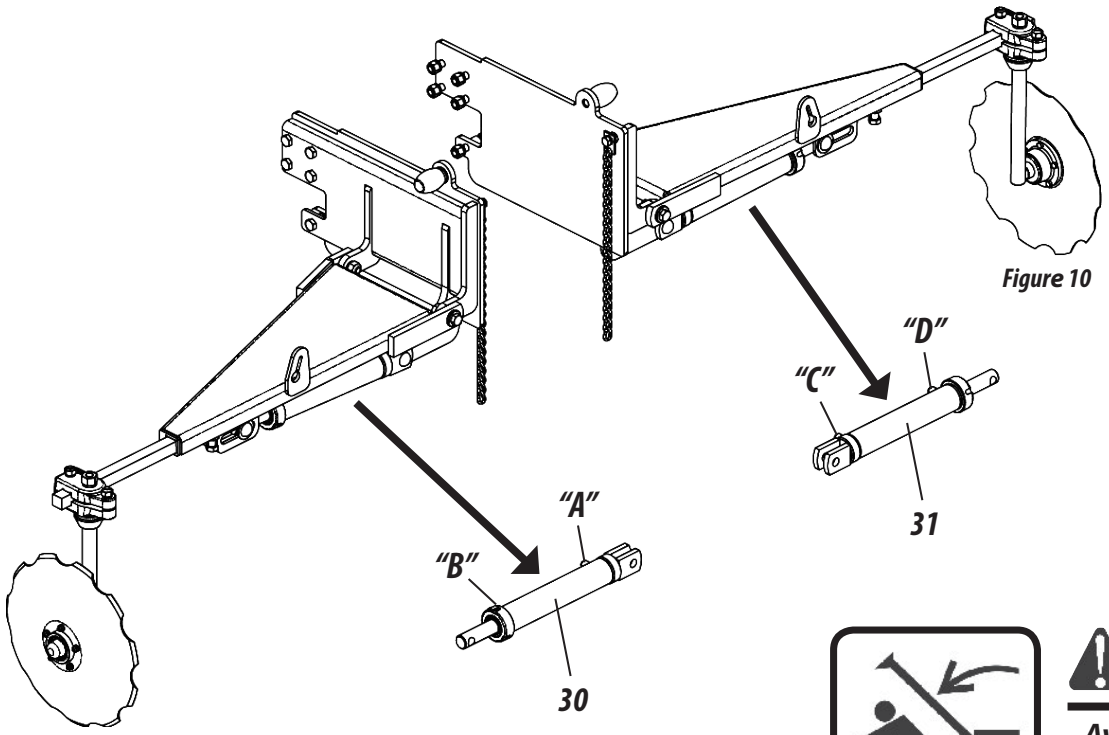

Figure 10

Figure 09

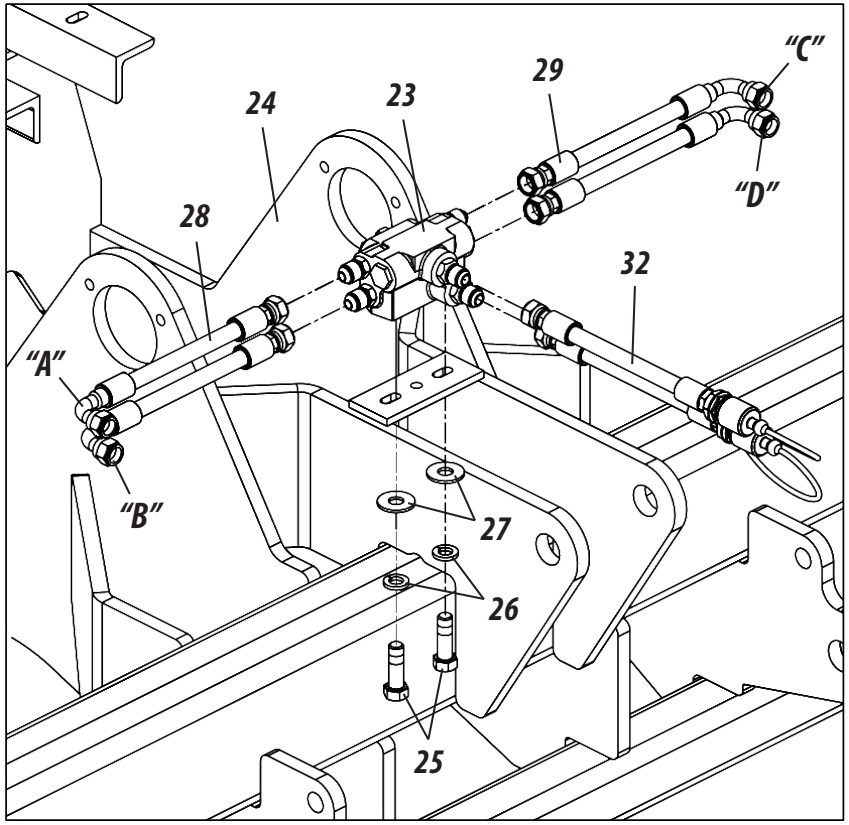

ATTENTION

Avoid accidents caused by the intermittent action of the line markers. When operating the seedeer, make sure there is nobody under the line markers or in their operating area.

SIDE TRANSPORT ASSEMBLY - OPTIONAL - PART I (FIGURES 11/12/13/14/15)

To mount the side transport (optional) on the **SPDE-A**, proceed as follows:

1- First, remove the nuts (1) and replace the bolts (2) of the wheel (3) with the bolts (4) of the package.

2- Then engage the coupler (5), replace the nuts (1) and retighten them.

3- Then install the locking nuts (6) of the packaging.

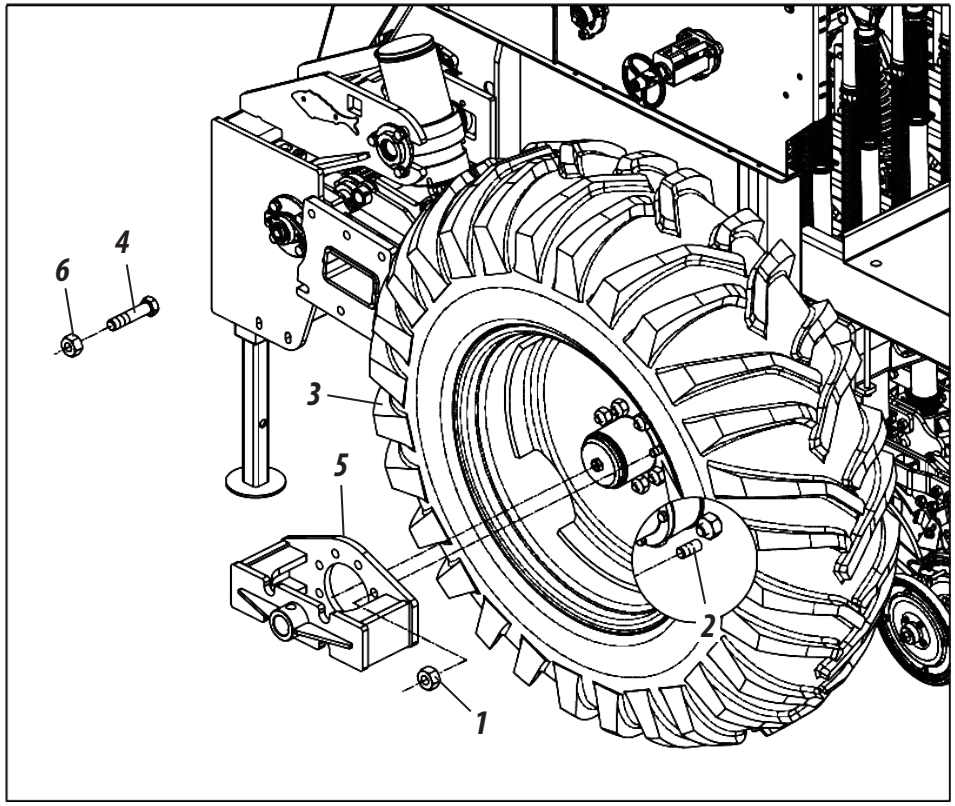

Figure 11

4- Then attach the bracket (7) to the chassis (8) by fastening washers through the screws (9), plain washers (10), lock washers (11) and nuts (12).

5- Then attach the bracket (7) to the coupling (13) through the screw (14), bushing (15), pressure washer (16) and nut (17).

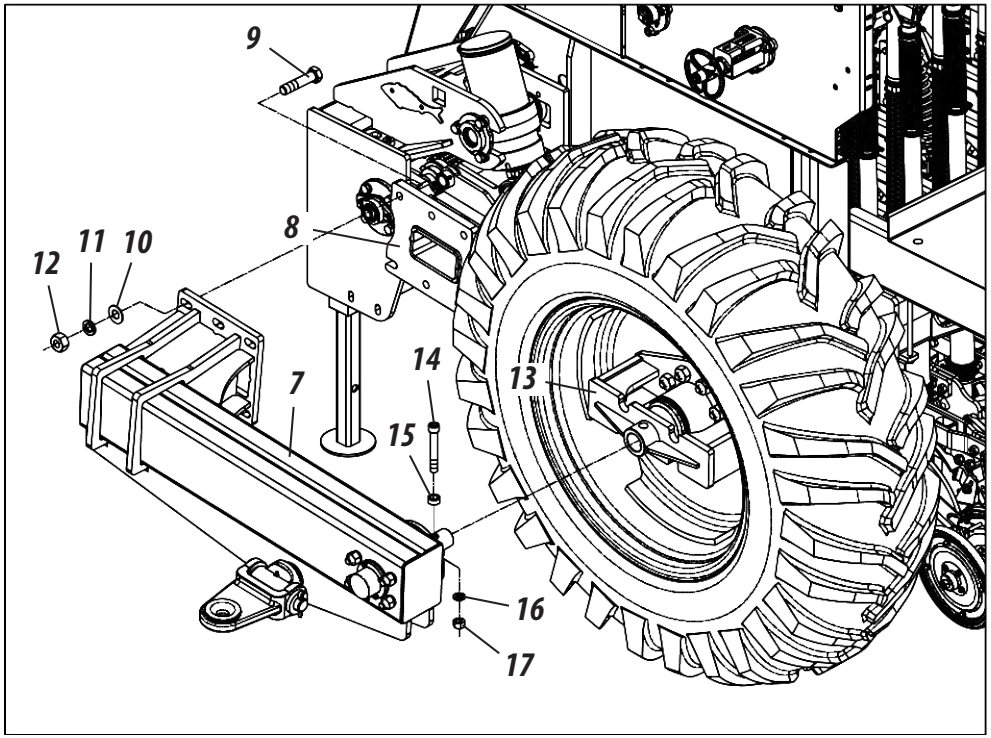

Figure 12

ASSEMBLY

SIDE TRANSPORT ASSEMBLY - OPTIONAL - PART II (FIGURES 11/12/13/14/15)

6- Then, attach the ring bracket (18) to the chassis (8), securing through the plate (19), bolt (20), plain washers (21), pressure washer (22) and nut (23).

7- Then, attach the wheel holder (24) to the ring bracket (18), securing through the pin (25), plain washer (26) and a nut (27).

8- Then, secure the hydraulic cylinder (28) to the support of the ring bracket (18) and on the wheel support (24), through pins (29) and (30), plain washers (31), cotter pin (32) and lock (33).

9- Then, attach the tire (34) to the wheel holder (24), securing through the nut (35).

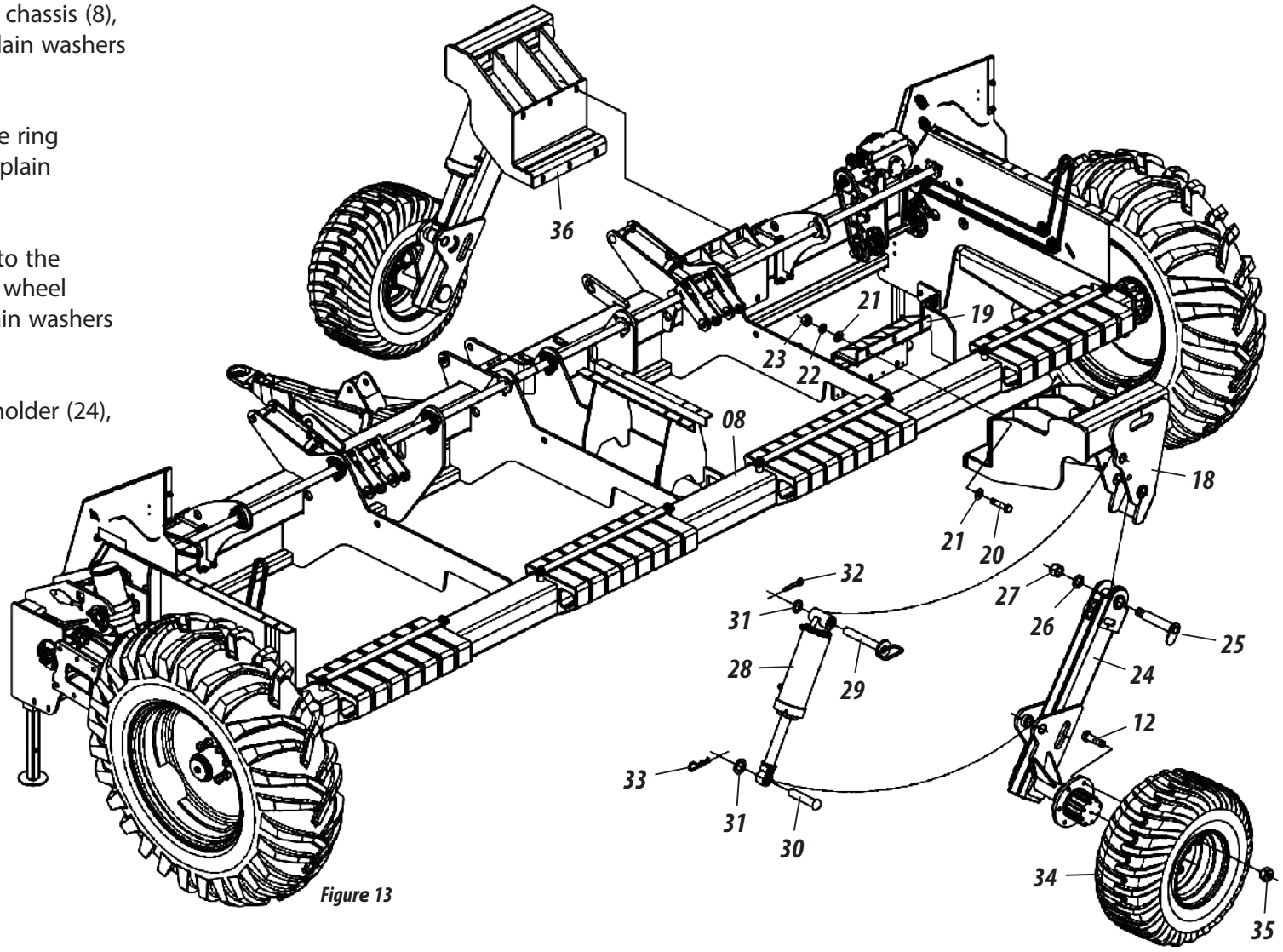

Figure 13

ATTENTION

When completing the rear wheel assembly, repeat the same procedure for mounting the front wheel (36).

SIDE TRANSPORT ASSEMBLY - OPTIONAL - PART III (FIGURES 11/12/13/14/15)

10- After attaching the rear and front wheel bolts, engage the head (37) on the leaf spring shackle (38) through the pin (39) and latch (40).
11- Then, engage the lower arm of the tractor on the "A" support of the head (37) through the pin (41) and latch (42).
12- Engage the 3rd point of the tractor (43) on the "B" support of the head (37) through the pin (44) and latch (45).
13- Finally with the aid of the regulating lever "C" Engage the lower tractor arm on the "D"pin of the head (37).

14- Finally, lift the head (46) by locking it with the pin (47) and the lock (48) for side transport of the seeder

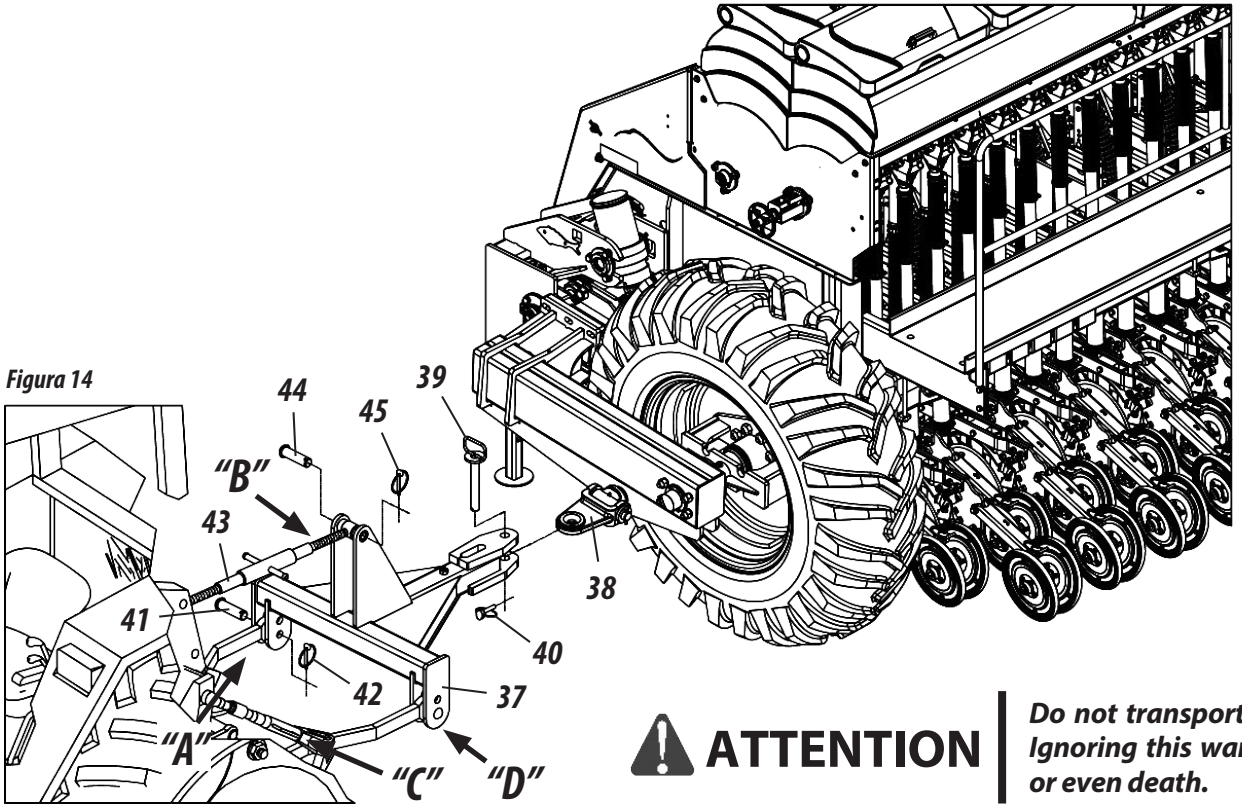

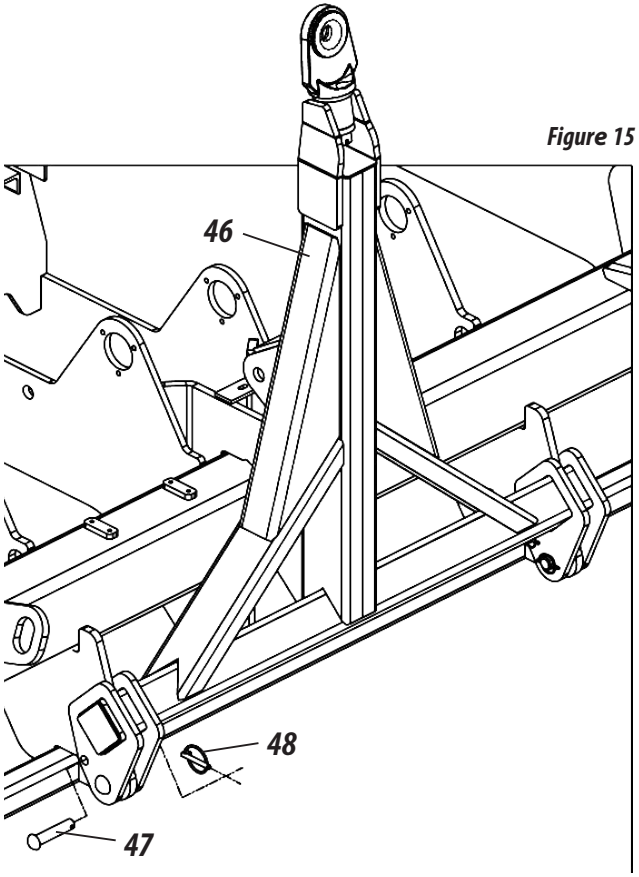

ATTENTION

Do not transport the seeder without first lifting and locking the head (46). Ignoring this warning could cause serious accidents, damage to the seeder or even death.

ASSEMBLY

ASSEMBLY OF THE HYDRAULIC SYSTEM FOR SIDE TRANSPORT - OPTIONAL (FIGURE 16)

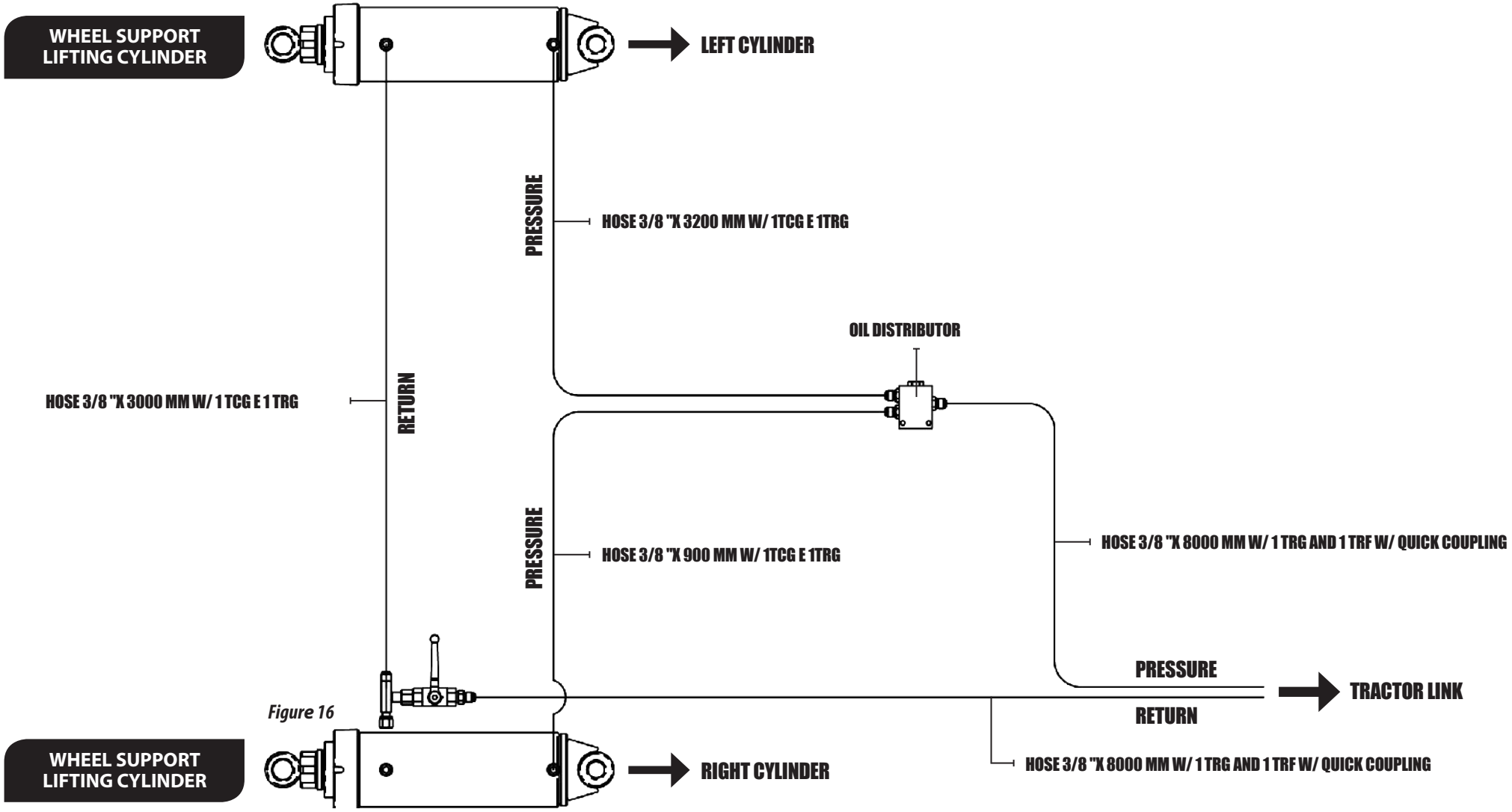

Figure 16

COUPLING TO THE TRACTOR (FIGURE 17)

Before attaching the seeder on the tractor, check that the tractor is equipped with a set of weights or ballasts on the front or the front wheels to avoid lifting the tractor. The rear wheels will give the tractor greater stability and traction on the ground. To couple the seeder, proceed as follows:

1 - Approach the tractor slowly to the seeder in reverse gear, paying attention to the application of the brakes.

2 - Then, level the coupling head (1) of the seeder in relation to the coupling of the tractor through the regulator (2). Then, approach the tractor slowly to the seeder in reverse gear, paying attention to the application of the brakes.

3- Then engage the coupling head (1) to the tractor, securing it through the coupling pin (3) and lock (4). 4- Then, attach the rest of the hoses (5) to the tractor's quick coupling, **as shown in figure 17.**

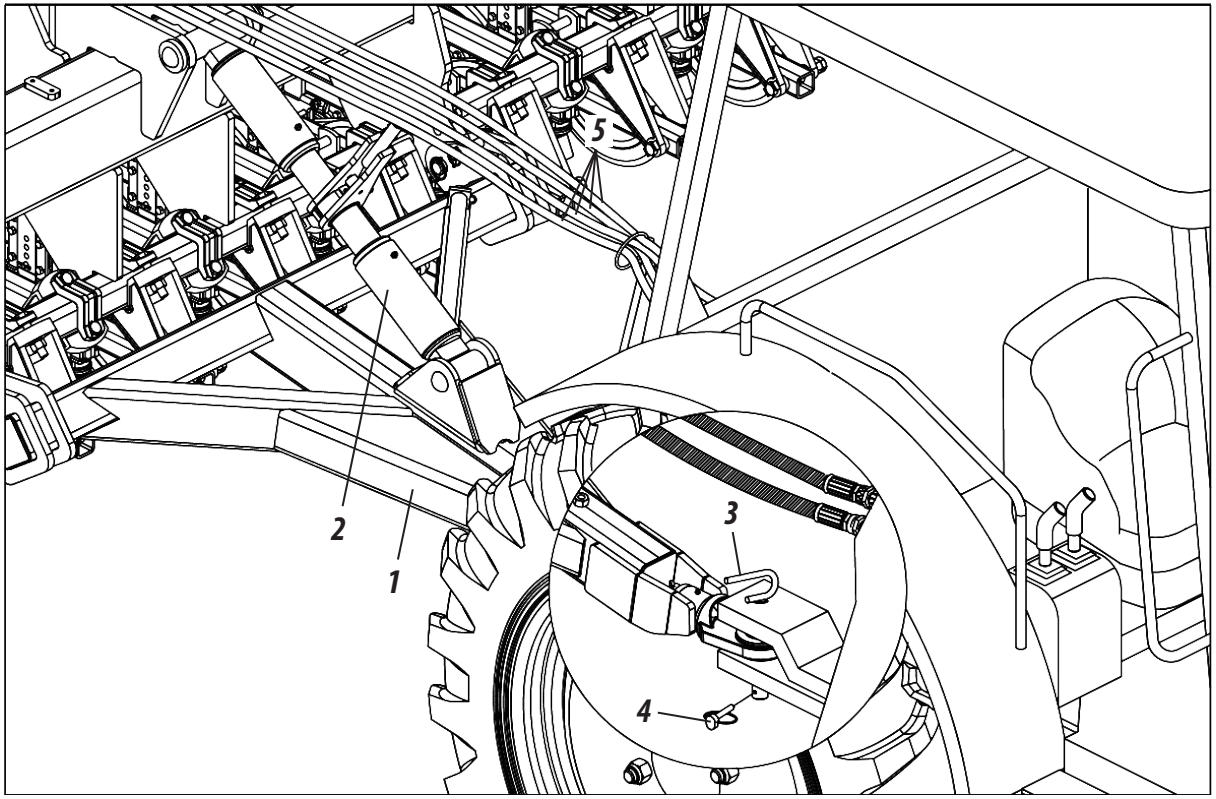

Figura 17

ATTENTION

Before connecting or disconnecting the hydraulic hoses, turn off the engine and relieve the hydraulic system pressure by fully operating the control levers. When relieving the system pressure, make sure that no one is near the moving area of the equipment.

IMPORTANT

When engaging the seeder find a safe and easily accessible place, always use a low gear with low acceleration.

LEVELLING

LEVELING OF THE SEEDER (FIGURE 18)

At the end of the coupling of the **SPDE -A**, level it by doing the following:

1- Place the tractor and seeder in a flat location.

2- Then completely raise the lines by activating the hydraulic cylinders.

3- Then level the seeder by using the regulator (1).

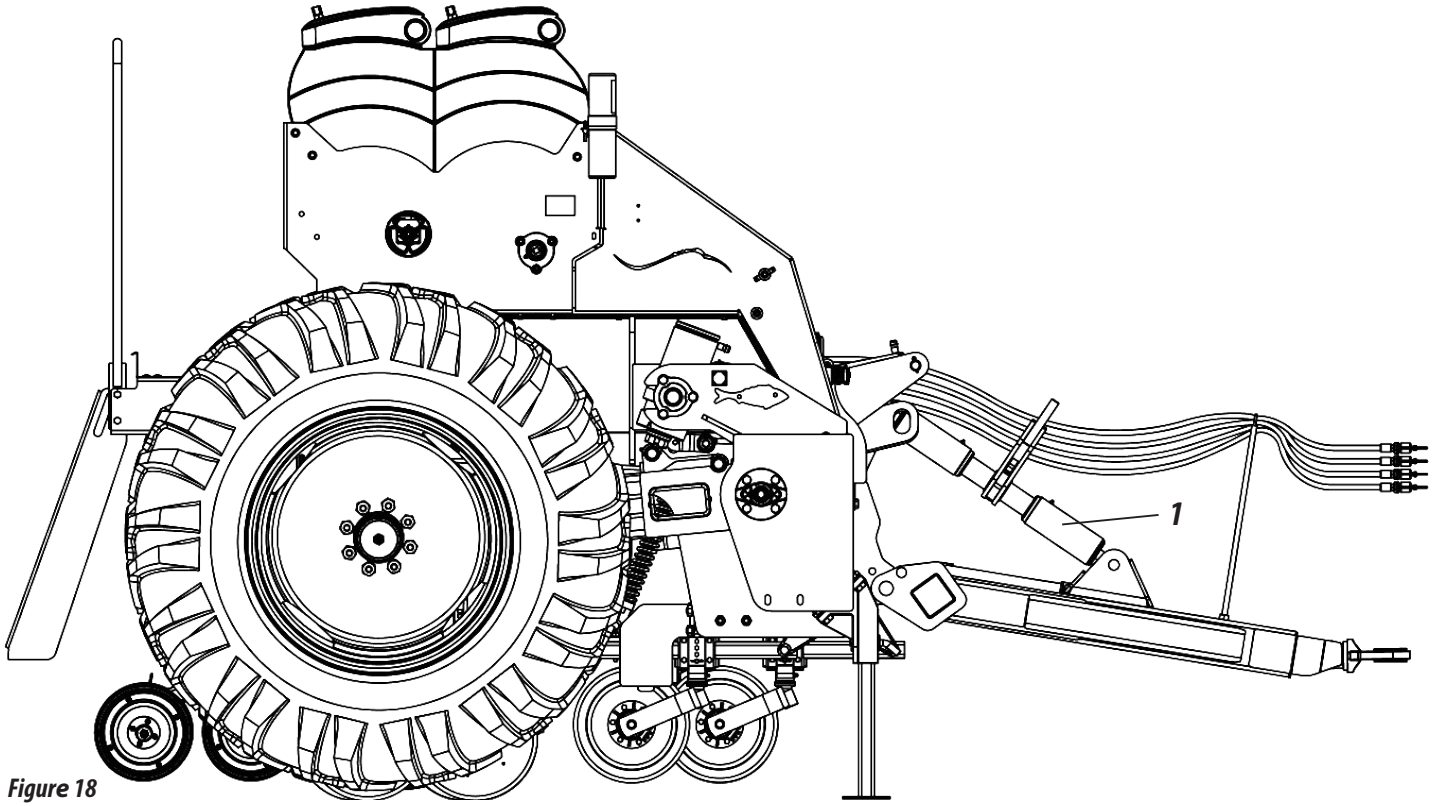

Figure 18

NOTE

The leveling adjustment varies according to the tractor model.

PROCEDURE FOR TRANSPORT (FIGURES 19/20/21/22)

Before transporting the seeder, proceed as follows:

1- Bring the support bracket back (1) and secure with the pin (2) and lock (3).

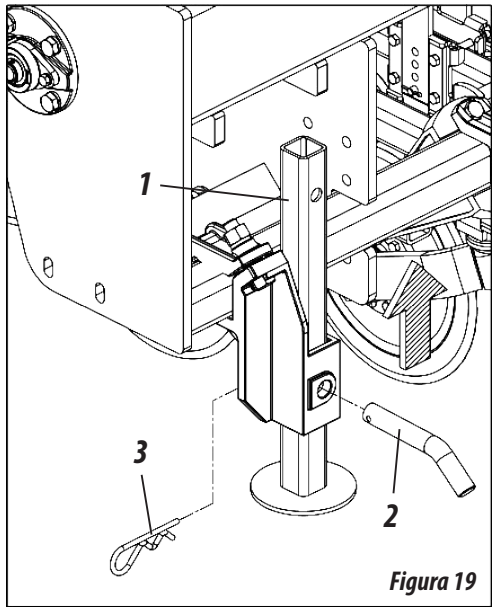

Figura 19

IMPORTANT

Do not carry a loaded seeder as this may damage it. We recommend filling it only in the workplace.
If the seeder is to remain in the field for any reason, we recommend removing any excess fertilizer that is in the seeder and covering it with tarpaulin to prevent moisture.

2- Then remove the pivot pin from the knob, **as shown in figure 27, page 30**.
3- Then lift the lines by fully activating the reach of the cylinders and place the lock (4) on the rods of the central cylinders (5) locking with the pin (6) and lock (7).

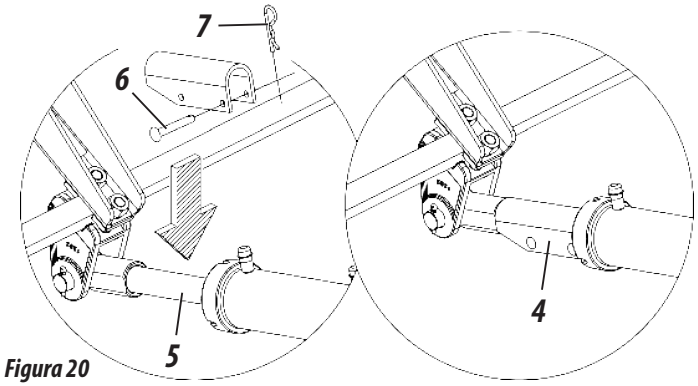

Figura 20

4- Fully activate the wheel cylinders (8) and close the valve (9), then relieve the pressure of them

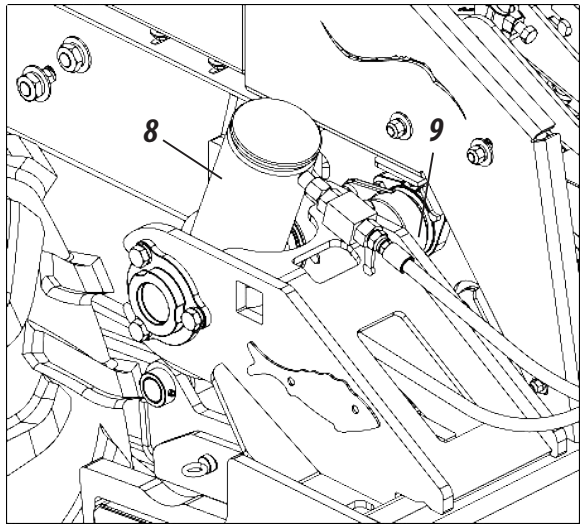

Figure 21

5- Before transporting the seeder, check that it is level with the ground, otherwise level it through the head regulator (10).

ATTENTION

Failure to remove the bending pin of the ring bracket (Figure 27, page 30) before lifting the lines will cause damage to the seeder.

NOTE

Do not transport the seeder without first checking all of the procedures mentioned.

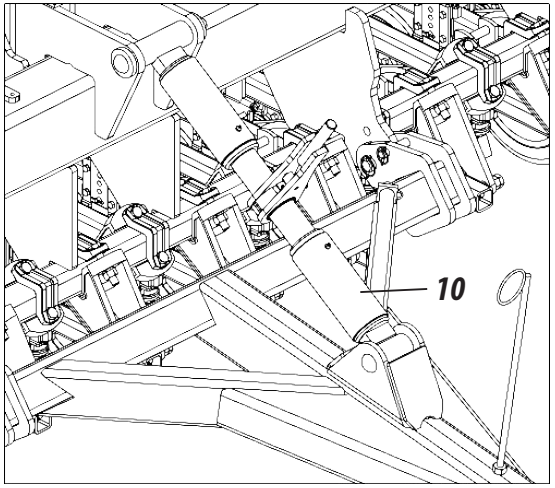

Figure 22

WORK

PROCEDURE FOR WORK (FIGURES 23/24/25/26)

Before working with the seeder, proceed as follows:

1- Bring the support bracket back (1) and secure with the pin (2) and lock (3).

2- With the seedeer down, check that it is leveled relative to the ground level, otherwise level it through the head regulator (4).

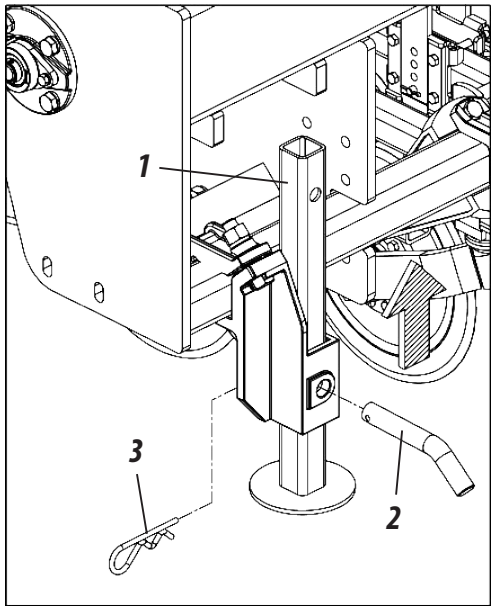

Figure 23

3- Then place the limiter (5) on the cylinders of the wheel(6), limiting the seeding of the seeder on the lines.

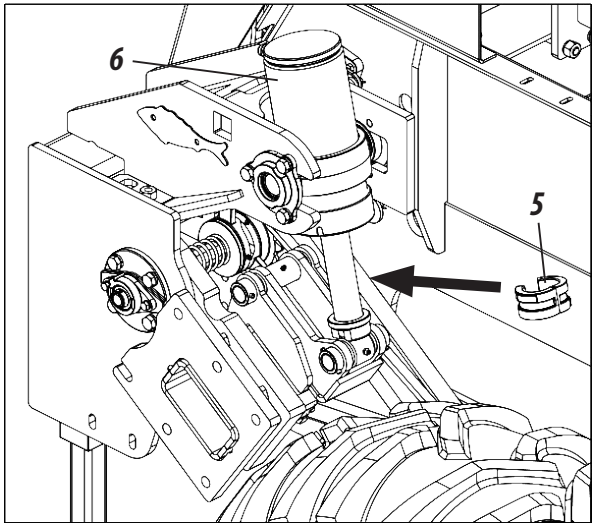

Figure 25

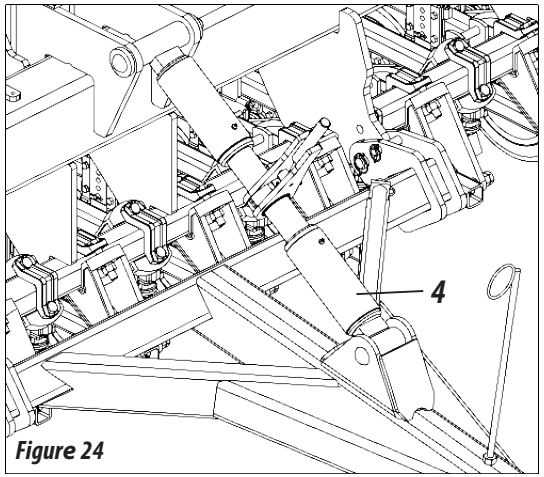

Figure 24

ATTENTION

If necessary, also use the limiter (5) on the line cylinders (7) for depth limitation.

IMPORTANT

If necessary, reduce or increase the spring pressure on the lines, depending on the type of ground, coverage and hardness of it.

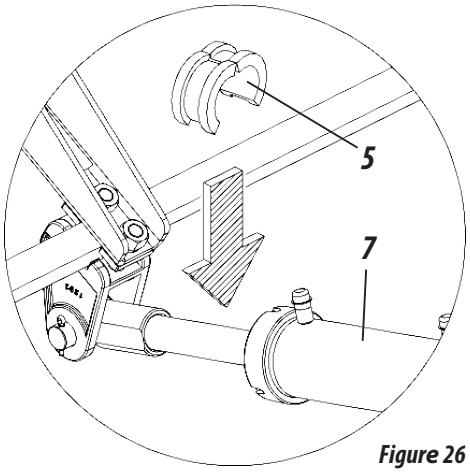

Figure 26

FIXATION AND WHEEL ARTICULATION SYSTEM (FIGURE 27)

The tire fixation and articulation systems (1) make them become free from the pressure of the springs on the ground, thereby allowing them to oscillate and follow the irregularities of the terrain, making so that the distribution of the fertilizer and seed is not disrupted.

1- For tires to oscillate, remove the pin (2), plain washer (3) and lock (4) on both sides of the machine to free the system.

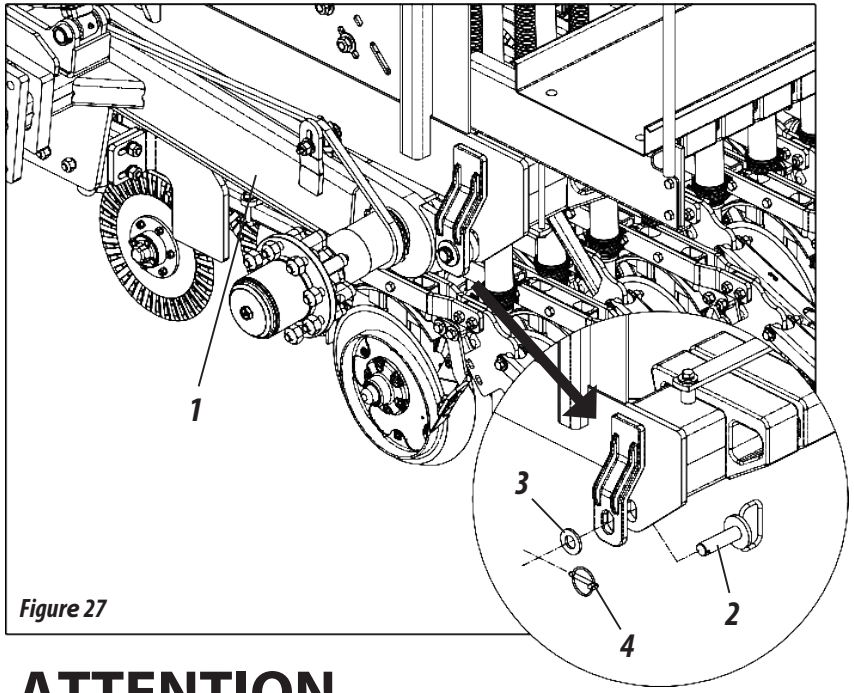

Figure 27

ATTENTION

To transport the seeder on a truck or to replace the tires, attach the pin (2), plain washer (3) and the lock (4).
To transport the seeder over the ground or to work with the seeder, remove the pin (2), plain washer (3) and the latch (4).

USING THE LADDER (FIGURES 28)

The folding ladder (1) should be used only when supplying or servicing **SPDE-A**. Before using the hinged ladder (1), make sure that the seeder is stopped and the tractor is switched off.

Figures 28

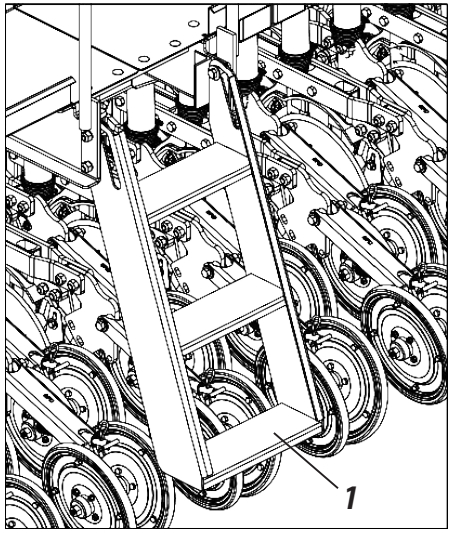

Position for supply or maintenance of the tank

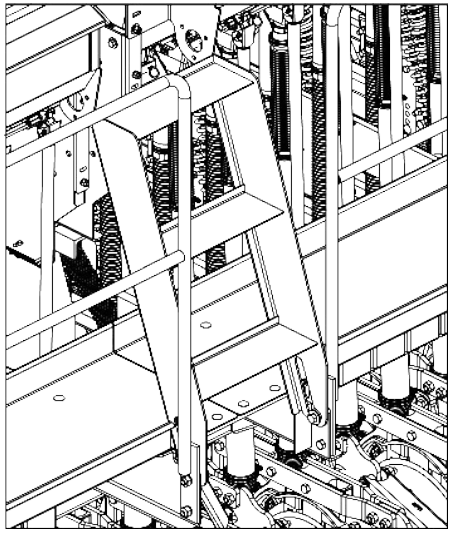

Position for work or transport

ATTENTION

Do not stand on the ladder when the seeder is working or being transported.
Do not work or transport the seeder with the ladder open.
Do not transport people on the platform, ladder or any other part of the seeder. Ignoring these warnings could result in serious injury or even death.

IMPORTANT

Always use the folding ladder (1) to access or fill the tank. The folding ladder (1) is in accordance with NBR standards.

ADJUSTMENTS

ADJUSTING OF THE LINE MARKERS (FIGURE 29)

The regulating of the line markers is important to obtain evenly spaced planting, making so that the edge line of the seeder is at the same spacing as the last planted line, facilitating future operations. To adjust the line markers, proceed as follows:

1- First of all, you must know the line spacing, the number of lines to be used in the operation and the tractor's front gauge. Use the formula below, followed by an example.

EXAMPLE: For planting with 32 rows in the seeder, with spacing of 0.26 m and the front gauge of the tractor at 1.43 m, determine:

Fórmula: $D = \frac{E \times (N+1) - B}{2}$

Solve: $X = \frac{0{,}26 \times 33 - 1{,}43}{2}$

D = 3,57 meters

Where:

E = Spacing between lines (mts)
N = Number of lines
B = Tractor front gauge
D = Marker distance

2- Adjust the line marker disc with 3,57 mts to the center of the first planting line.

3-- Line markers are sequential, one lowers after the other, so if during planting before the end of the line there is the need to stop work, engage the valve of the line markers to continue working with the marker on the right side.

IMPORTANT | ***In case of tractor replacement, the calculation and adjustment must be made again.***

NOTE | ***In order for the line marker to return to the same side, it is necessary to actuate the valve twice.***

ATTENTION

Avoid accidents caused by the intermittent action of the line markers. When activating the seeder, make sure there is nobody on the line markers or in the area of their action.

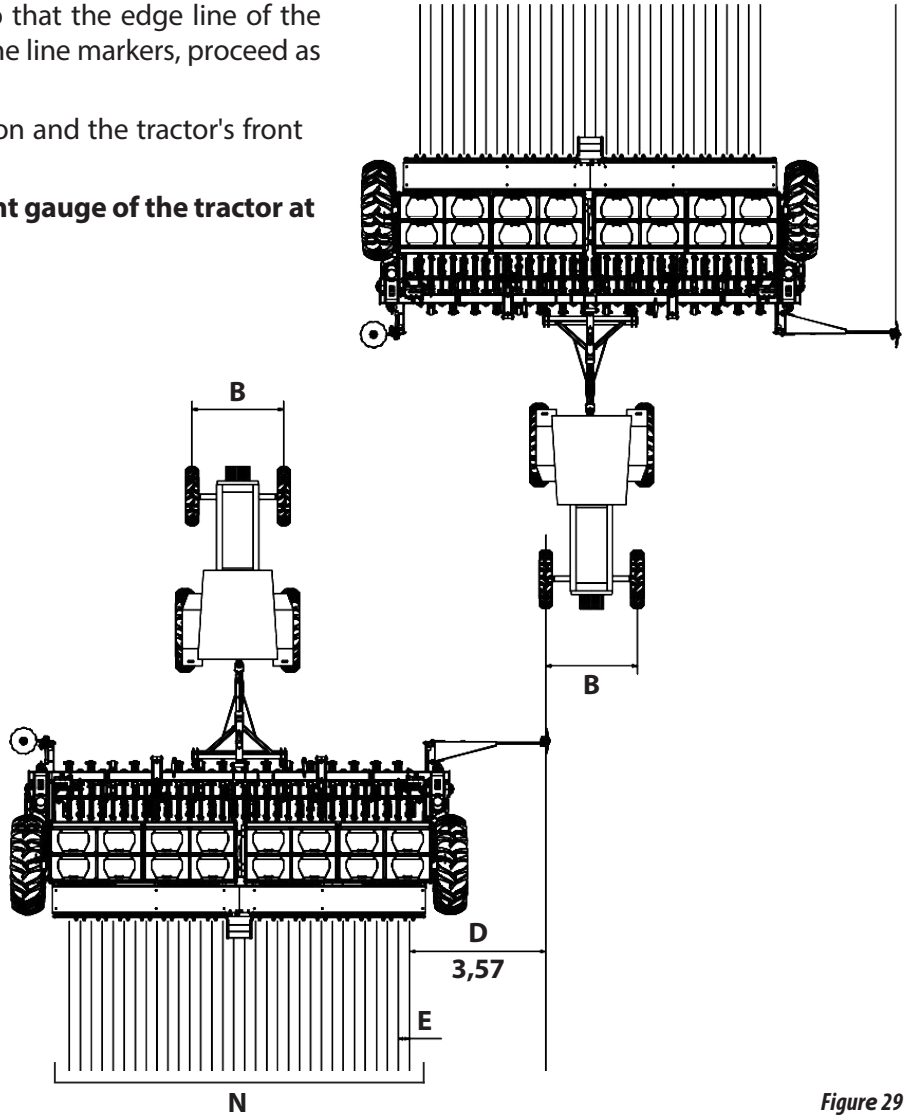

Figure 29

ADJUSTING OF THE LINE MARKER DISCS (FIGURE 30)

The discs (1) of the line markers (2) have angular adjustment to facilitate the demarcation work on the ground.
To adjust the discs (1) of the line markers (2), proceed as follows:

1- Loosen the nut (3), turn the disc (1) to the desired position.

2- Then retighten the nut (3), securing the disc (1) to the desired position.

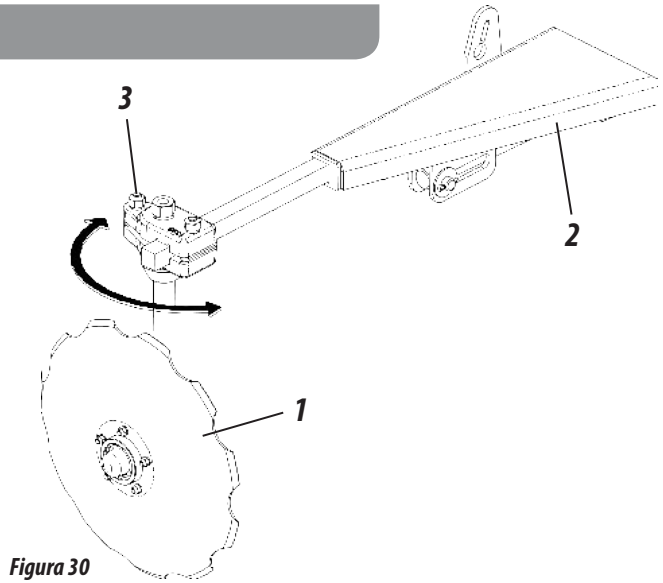

Figura 30

ATTENTION ***Before making any adjustments to the line marker, make sure it is on the ground, the seeder is stopped and the tractor is off.***

ADJUSTING OF THE LINE MARKER BAR (FIGURE 31)

Line markers (1) have distance adjustment to be adjusted according to the number of lines, spacing and gauge of the tractor.
To adjust the distance of the line marker (1), proceed as follows:

1- Loosen the screw (2), move the rod (3) to the desired position.

2- Then retighten the bolt (2), securing the bar (3) to the desired position.

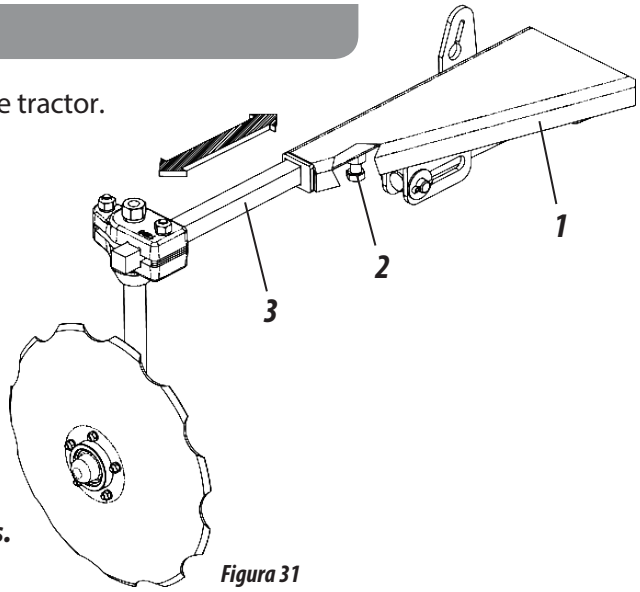

Figura 31

IMPORTANT ***To know the distance to be regulated on the line marker, proceed as follows. Perform the calculation according to the instructions on the previous page***

ADJUSTMENTS

FINISHING SYSTEM (FIGURE 32)

The **SPDE-A l**eaves the factory with the finishing system that allows planting with only one side of the seeder, that is, half of the lines. To activate the finishing system, proceed as follows:

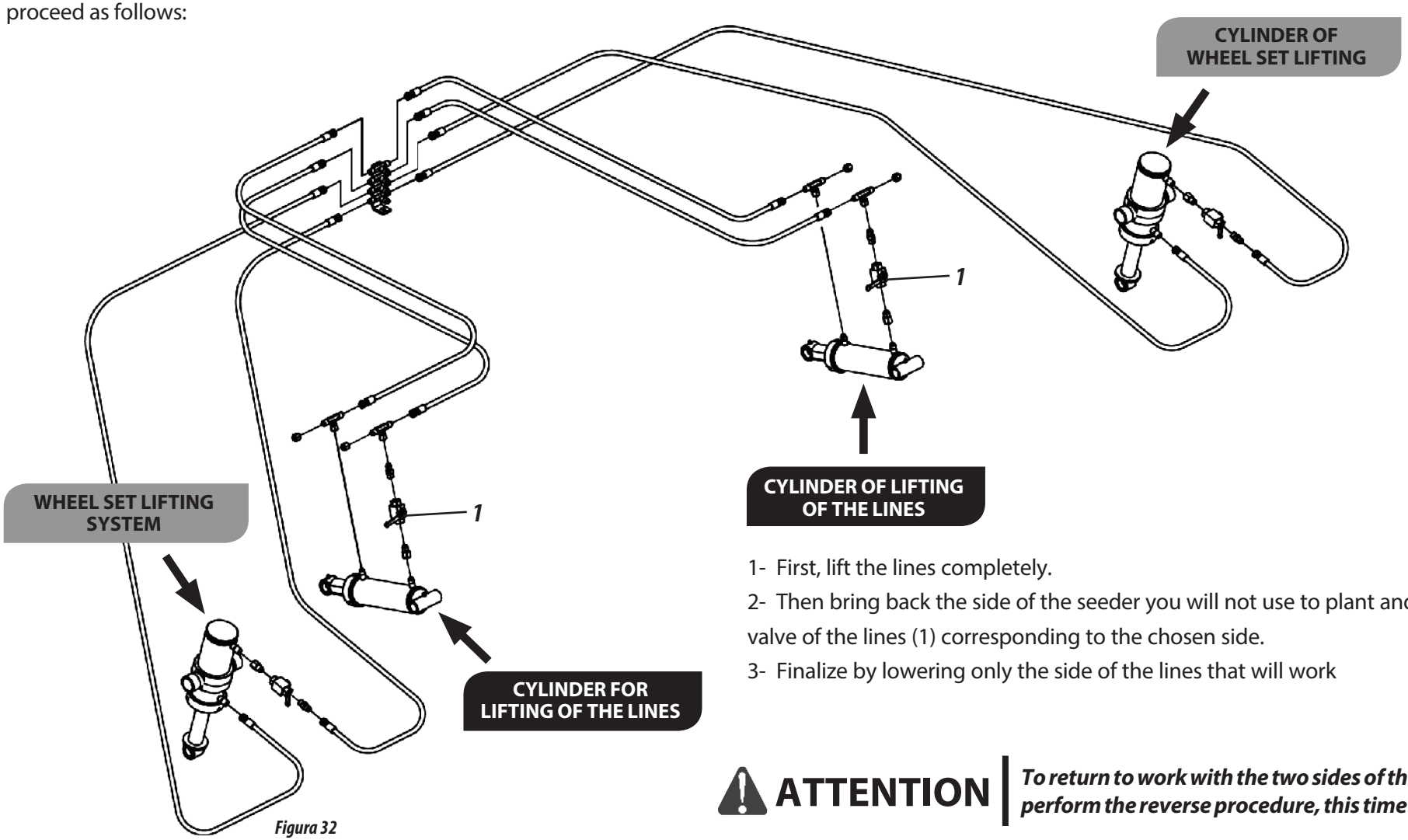

Figura 32

1- First, lift the lines completely.

2- Then bring back the side of the seeder you will not use to plant and close the pressure valve of the lines (1) corresponding to the chosen side.

3- Finalize by lowering only the side of the lines that will work

ATTENTION ***To return to work with the two sides of the seeder, perform the reverse procedure, this time opening the valve.***

SEED REGULATION (FIGURES 33/34 / TABLE 02)

The **SPDE -A** Has seed dispensers (1), which have 03 (three) control points used according to the size of each type of seed to be used, being

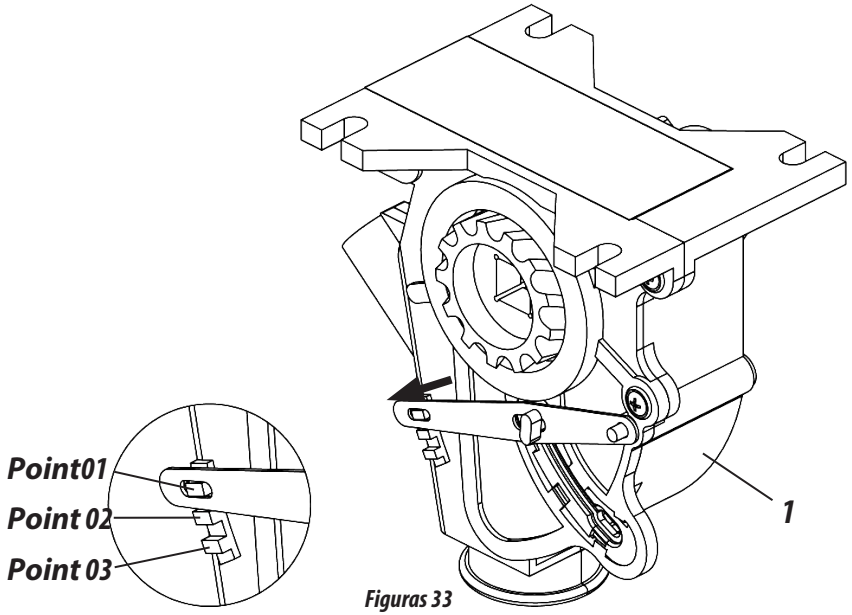

Figuras 33

Point 01 - For small seeds:	Wheat, rice, oats and the like.
Point 02 - For medium seeds:	Soy, rice, peas, etc.
Point 03 - For large seeds:	Soybean, etc.

Table 02

⚠ ATTENTION

Failure to follow the above instructions may result in seed damage and/or changing of the quantity of seeds distributed.

The distribution regulation of seeds is made through wheel valve (2), for this purpose, proceed as follows:

1- Pull the wheel valve (2) forward and unlocking it.

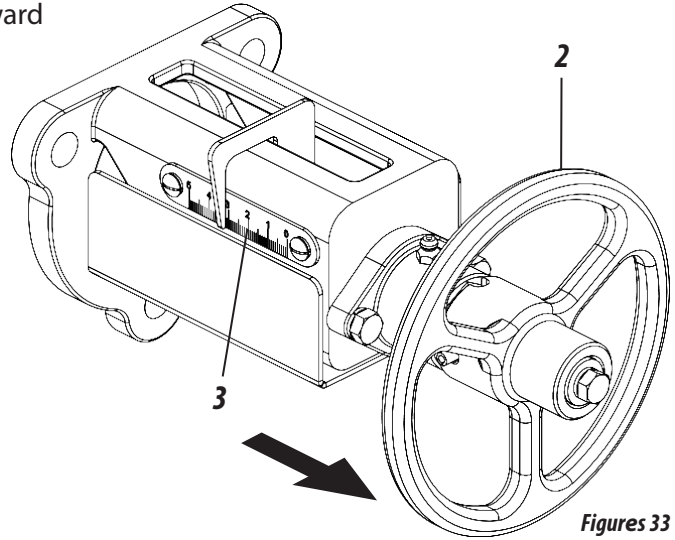

Figures 33

2- Then, turn the wheel valve (2) to the "A" or "B" direction by adjusting the doser (3) to the value found in the table on the following page, according to your needs and working condition.

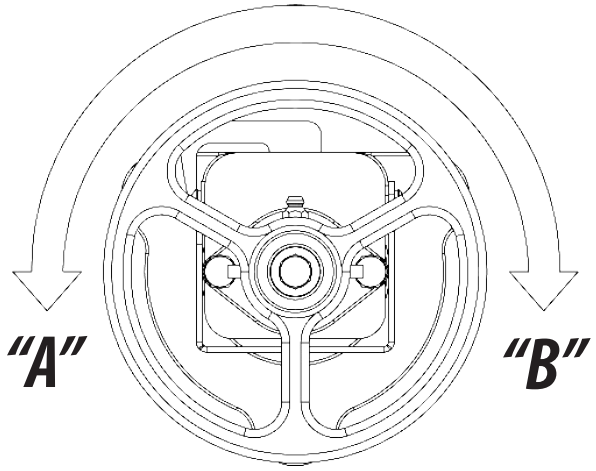

SEED DISTRIBUTION SYSTEM

SEED DISTRIBUTION SYSTEM

SEED REGULATION (FIGURES 33/34) - CONTINUED

3- Finish by pushing the wheel valve (2) back, locking it.

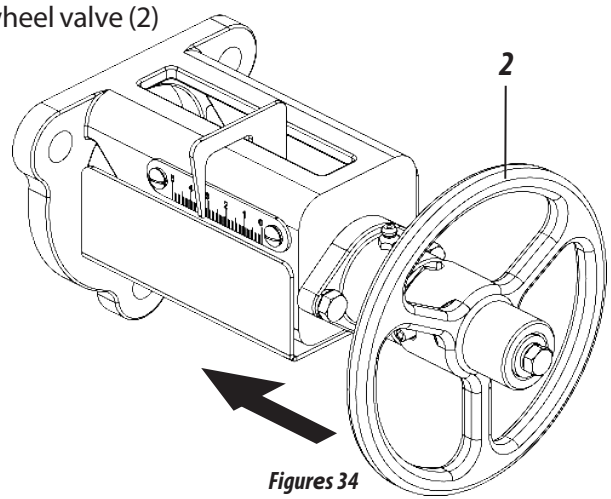

Figures 34

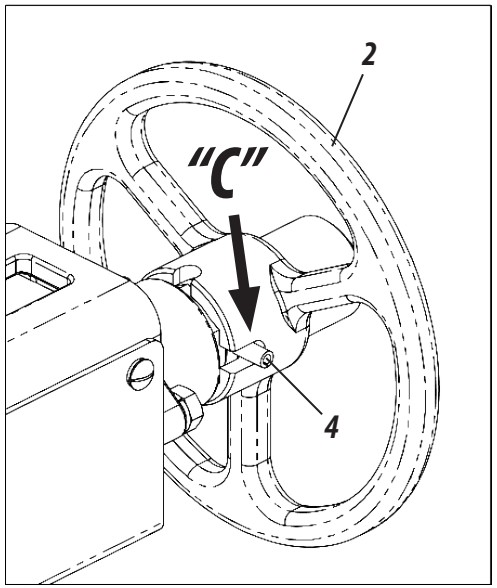

ATTENTION

To lock the wheel valve (2), the hole "C" must be positioned in the center of the spring pin (4).).

REGULATION FOR SEED DISTRIBUTION (FIGURES 35)

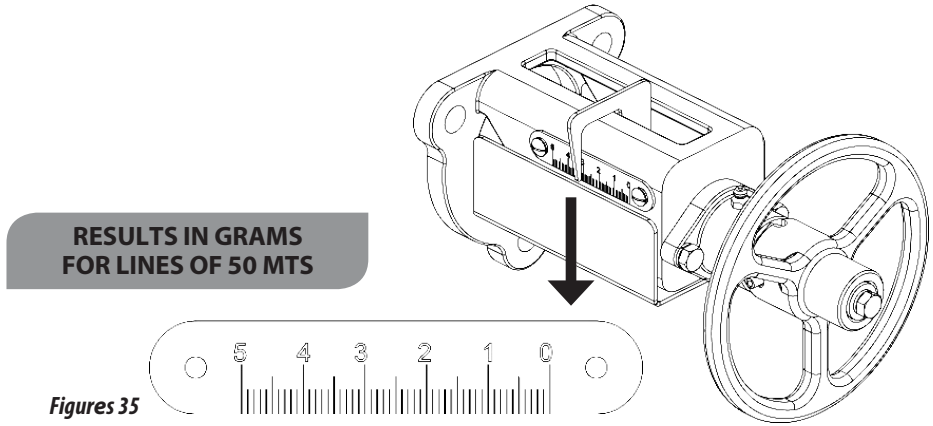

Figures 35

SEED DOSING SCALE (TABLE 03)

Table 03

		Seed Regulation											
		0	5	10	15	20	25	30	35	40	45	50	
Seed distributor points	1	-	19	64	109	158	214	281	332	397	452	507	SOYBEAN
	2	-	26	83	133	192	250	330	402	473	549	605	
	3	-	33	97	158	223	293	379	423	541	624	696	
Seed distributor points	1	-	19	40	59	78	101	130	158	186	213	237	RICE
	2	-	23	47	69	92	120	151	182	212	241	269	
	3	-	25	50	78	102	132	168	203	239	272	304	
Seed distributor points	1	-	37	73	110	146	187	232	277	321	365	407	FLOUR
	2	-	41	83	125	167	217	278	332	389	444	495	
	3	8	55	110	165	210	272	321	371	421	470	522	

REGULATION FOR SEED DISTRIBUTION (FIGURES 35) - CONTINUATION

SEED DISTRIBUTOR

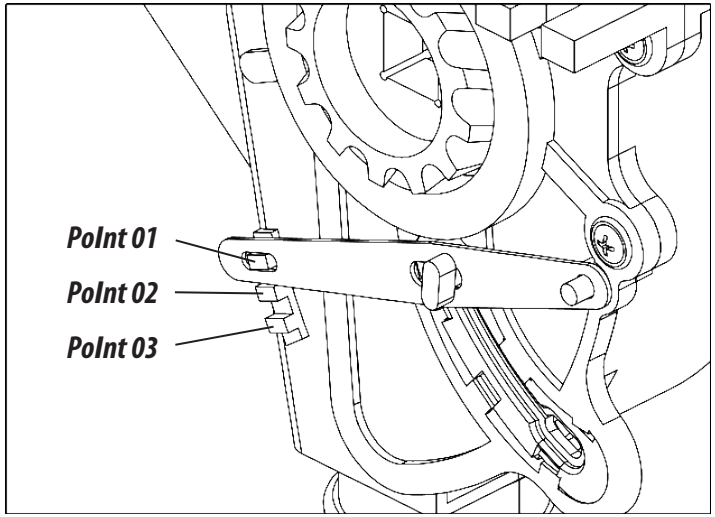

Figures 35

Ha = 10.000 m²

AA = 24.200 m²

⚠ ATTENTION

Before beginning sowing, check that the distribution is correct in relation to the distribution table of the previous page.

TO CALCULATE THE AMOUNT OF FERTILIZER AND SEED PER HA OR AA, ONE SHOULD:

1- Be aware of the amount of fertilizer and seed to be applied per (Ha) or (AA).

2- Be aware of the row spacing of the seeder.

3- Perform the calculation by Ha, dividing the Ha = 10,000 m² by the spacing to be planted.

4- If the calculation is done by AA, divide the AA = 24,200 m² by the spacing to be planted.

5- And finally, divide the amount of fertilizer and seed to be applied by the linear meters.

6- To gauge the weight, collect the fertilizer or seeds in 10 or more meters rotated to do the weighing.

SEED DISTRIBUTION SYSTEM

REGULATION OF THE FINE SEED BOX (PASTURE) - OPTIONAL (FIGURES 36 / TABLE 04)

The **SPDE -A** can be purchased optionally with a tank for fine seeds (pasture). To regulate the fine seed box (pasture), proceed as follows:

1- Refer to the distribution table below and check the desired quantity per hectare.

Table 04

The distribution of pasture seeds (kg/ha) with spacing of 170 mm									
		Scale Number							
	Type of Culture	0,5	1,0	1,5	2,0	2,5	3,0	3,5	4,0
GRASSES	COLONIÃO	-	2,0	3,5	5,0	9,0	10,0	10,0	11,0
	COMMON BRACHIARA	-	5,0	7,0	10,0	17,0	20,0	20,0	22,0
	BRACHIARA BRIZANTHA	-	3,0	5,0	7,0	14,0	17,0	17,0	20,0
	PAINÇO	3,0	8,0	14,0	20,0	32,0	40,0	40,0	48,0
LEGUMES	SOY PERENE	3,5	10,0	17,0	24,0	32,0	41,0	50,0	59,0
	ALFAFA	4,0	12,0	20,0	29,0	38,0	47,0	56,0	65,0
	CORNICHÃO	4,5	13,0	21,0	30,0	40,0	50,0	60,0	70,0
	DESMODIUM	3,8	12,0	19,0	26,0	34,0	43,0	52,0	61,0
	CLOVER	3,6	11,0	18,0	25,0	33,0	42,0	51,0	60,0

EXAMPLE:
To distribute 10kg / ha of colonião seeds with a spacing of 170mm, turn the wheel valve (1) until the regulator reaches the number 3.5 of the scale (3), as shown in the figure on the side

2- Then unlock the wheel valve (1) through the lock (2).

3- Then, turn the wheel valve (1) to the "A" or "B" direction, adjusting scale (3) to the value found in the table according to your need and working condition

Turning the wheel in the "A" direction
The scale is closed.

Turning the steering wheel in the "B" direction
Scale opens.

Figures 36

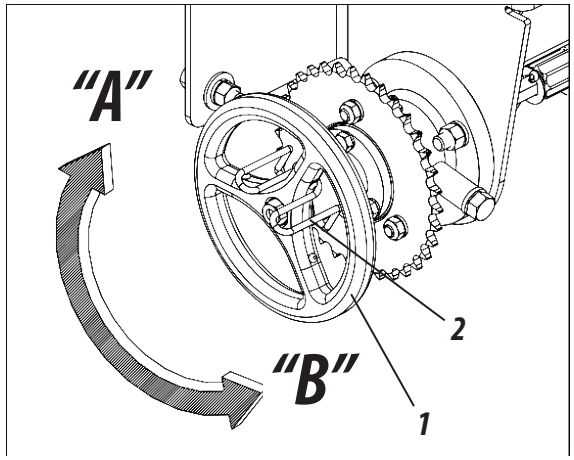

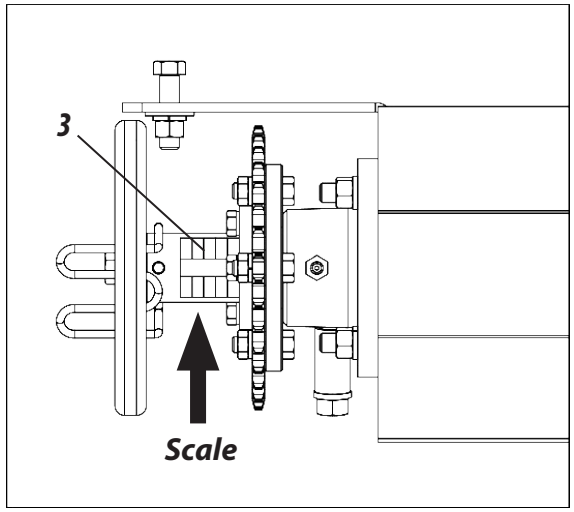

ATTENTION

The table of distribution of pasture seeds above presents approximate values per hectare for spacing of 170 mm. This table may vary according to the types of seed varieties. We recommend doing a practical check before you start planting.

INDEPENDENT FERTILIZER CONDUCTOR SYSTEM (FIGURES 37/38)

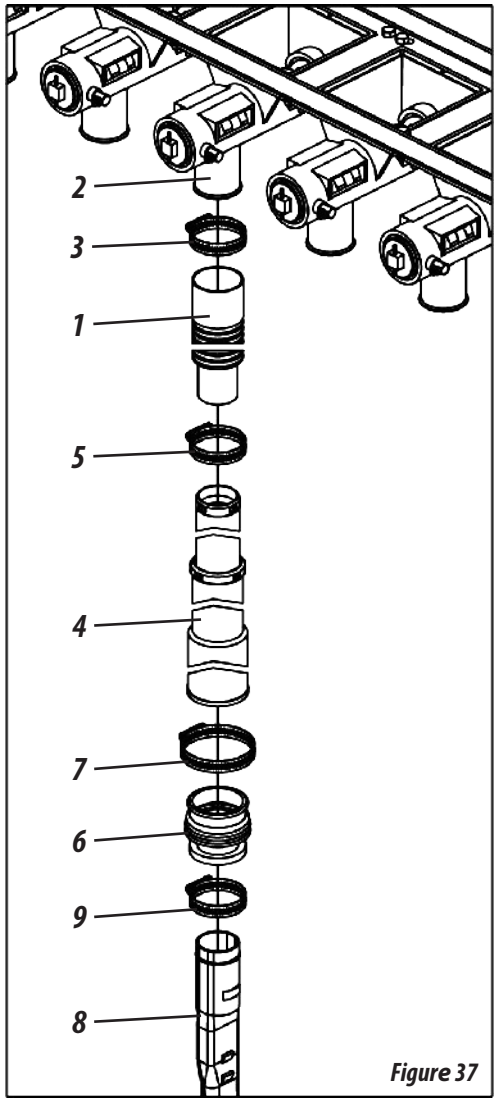

Figure 37

To send the fertilizer from the distributor to the ground, fit the hose (1) to the outputs of the independent conductor (2) through the clips (3). Then, attach the telescopic cable (4) to the hose (1) by attaching it through the clamp (5). Then, attach the rubber coupling (6) to the telescopic cable (4) by attaching it through the clip (7). Finish by attaching the spout (8) to the rubber coupling (6) by attaching through the clip (9), **as shown in figure 37.**

The independent distribution system has safety outputs that ensure the smooth operation of the system without damaging it. In the event of clogging of the hose and the doser, clean the doser up to the end of the hose near the double disc, as the system can clog up with roots, pieces of plastic and other objects, **as shown in figure 38.**

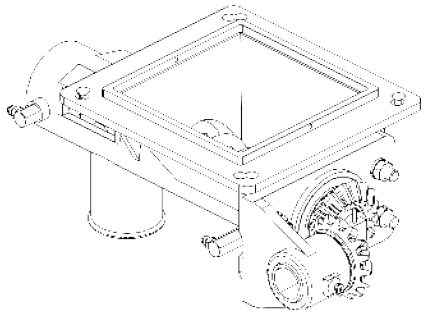

INDEPENDENT CONDUCTOR

⚠ ATTENTION

Check dispensers and hoses daily and clean the exits. When the fertilizer has impurities or is moist, clean it more often.

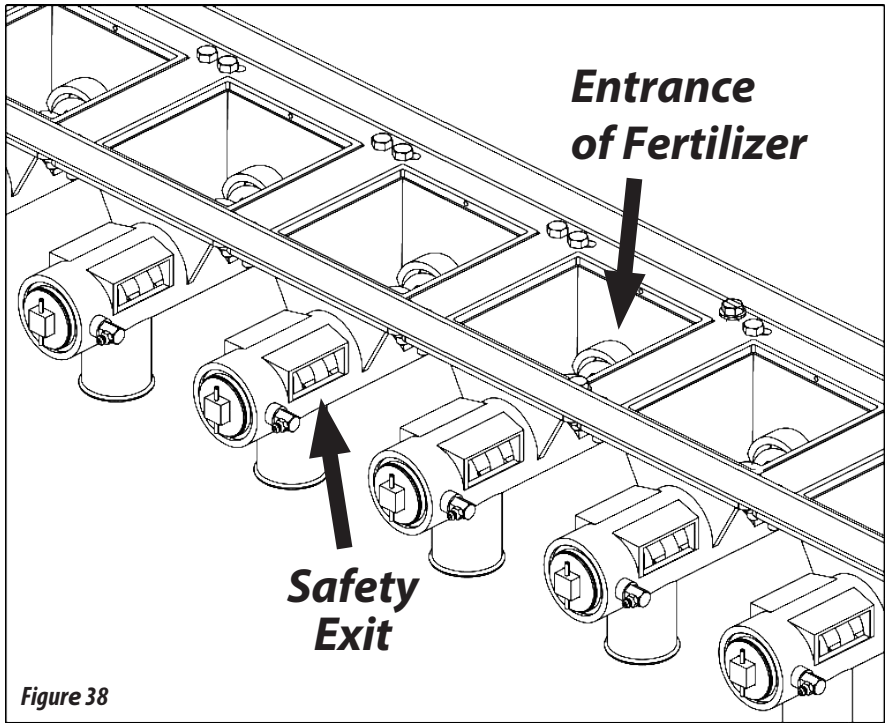

Figure 38

FERTILIZER DISTRIBUTION SYSTEM

FERTILIZER DISTRIBUTION SYSTEM

FERTISYSTEM FERTILIZER DISTRIBUTION SYSTEM - OPTIONAL (FIGURES 39/40)

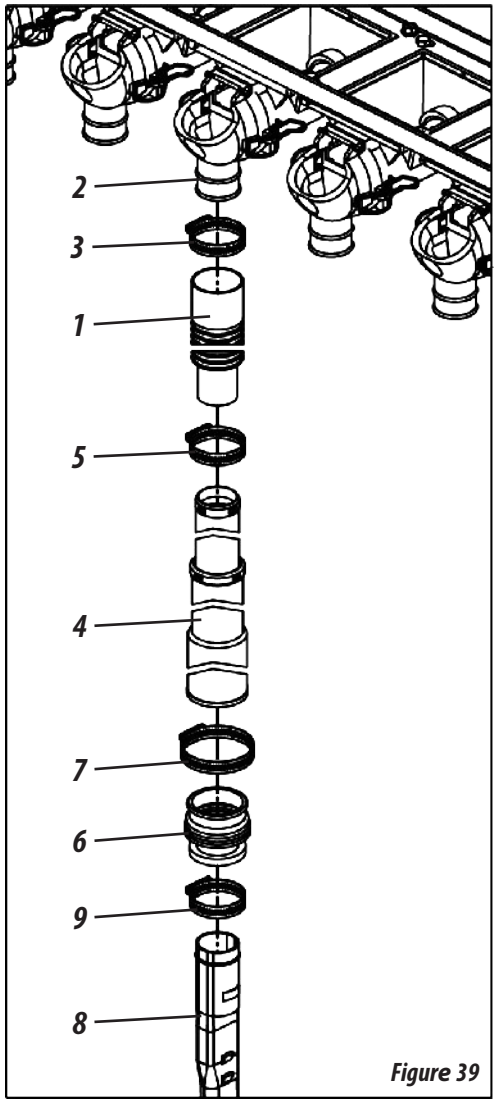

Figure 39

To send the fertilizer from the distributor to the ground, fit the hose (1) to the outputs of the independent conductor (2) through the clips (3). Then, attach the telescopic cable (4) to the hose (1) by attaching it through the clamp (5). Then, attach the rubber coupling (6) to the telescopic cable (4) by attaching it through the clip (7). Finish by attaching the spout (8) to the rubber coupling (6) by attaching through the clip (9), **as shown in figure 39.**

The Fertisystem distribution system has safety outputs that ensure the smooth operation of the system without damaging it. In the event of clogging of the hose and the doser, clean the doser up to the end of the hose near the double disc, as the system can clog up with roots, pieces of plastic and other objects, **as shown in figure 40.**

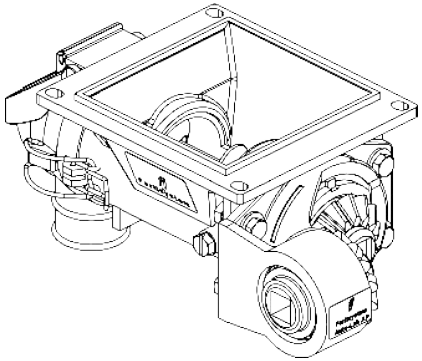

FERTISYSTEM CONDUCTOR

⚠ ATTENTION

Check dispensers and hoses daily and clean the exits. When the fertilizer has impurities or is moist, clean it more often.

Figure 40

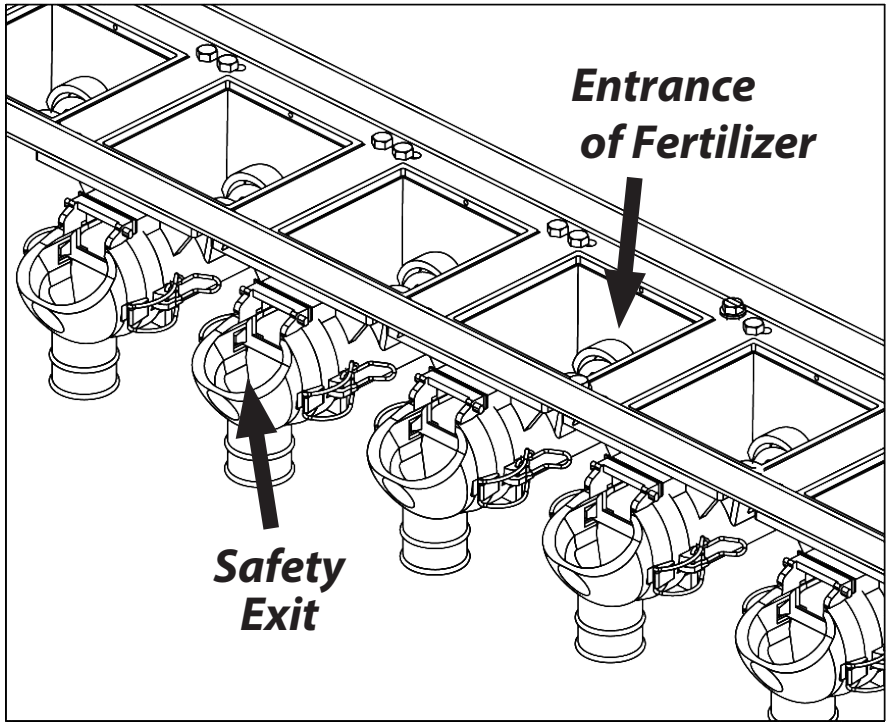

SPEED BOX (FIGURE 41)

The seeders are equipped with the *Speed Box* (1), system, which drives the distribution system with simple adjustments, ensuring fast rotation changes. To regulate seeds, proceed as follows:

1- Select the desired quantity in the tables and check the corresponding combination on the levers (2). **Example:** Position **F2** In the table, indicates that the lever with letters should be in position **"F"** and the lever with numbers must be in position **"2", as shown in figure 41**

2- To move the levers, remove the lock (3), pull the handle (4), then adjust the levers as shown above. At the end of the combination, return the knob (4) and replace the lock (3).

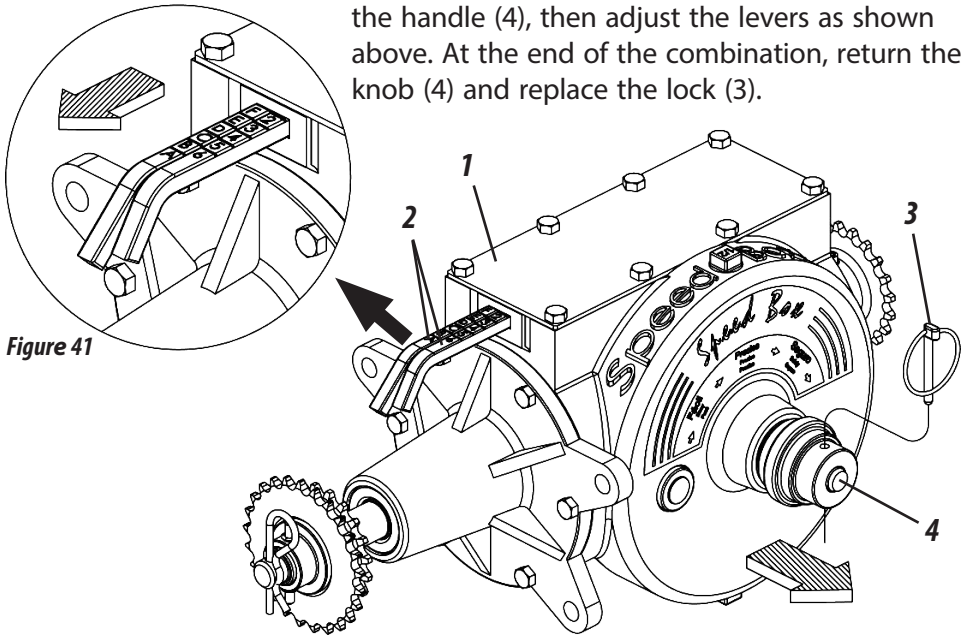

Figure 41

REGULAGEM PARA DISTRIBUIÇÃO DE ADUBO (FIGURA 42)

The seed adjustment is made by the *Speed Box* (1). For more adjustments, reverse the direction of the chain of the motor gears. **"A"** and moved **"B"**, **as shown in figures 42.** To reverse the direction of the chain on the gears, proceed as follows:

1- First, turn the tensioner (2) removing the tension of the chain (3).
2- Then reverse the chain (3) as work requires.
3- Then, release the tensioner (2) releasing it, returning the tension in the chain (3).

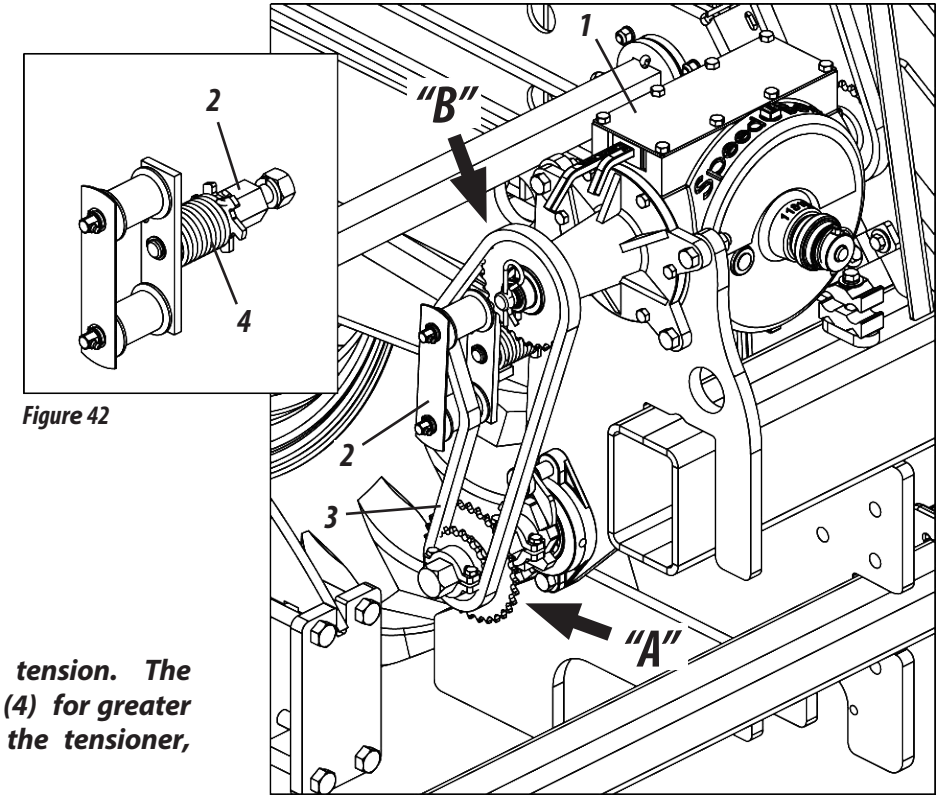

Figure 42

IMPORTANT

After changing the gears, check the chain tension. The tensioner (2) is provided with a torsion spring (4) for greater flexibility of it. If more pressure is required on the tensioner, proceed as instructed on page 58, figure 57.

FERTILIZER DISTRIBUTION SYSTEM

FERTILIZER DISTRIBUTION SYSTEM

Note: Spring with 1" pitch

Table 05

Fertilizer Distribution Table per hectare - SPDE -A																	
Ratchet shaft output gear						20		Input gear of Speed Box								31	
Combination	Grams 50 m Linear	Line Spacing															
		170	250	300	350	400	450	500	550	600	650	700	750	800	850	900	950
F - 1	65	77	52	43	37	33	29	26	24	22	20	19	17	16	15	14	14
F - 2	73	86	59	49	42	37	33	29	27	24	23	21	20	18	17	16	15
E - 1	81	96	65	54	47	41	36	33	30	27	25	23	22	20	19	18	17
F - 3	84	99	67	56	48	42	37	33	30	28	26	24	22	21	20	19	18
E - 2	92	108	73	61	52	46	41	37	33	31	28	26	24	23	22	20	19
D - 1	98	115	78	65	56	49	43	39	36	33	30	28	26	24	23	22	21
F - 4	98	115	78	65	56	49	43	39	36	33	30	28	26	24	23	22	21
E - 3	105	123	84	70	60	52	47	42	38	35	32	30	28	26	25	23	22
D - 2	110	129	88	73	63	55	49	44	40	37	34	31	29	27	26	24	23
C - 1	114	134	91	76	65	57	51	46	41	38	35	33	30	28	27	25	24
F - 5	117	138	94	78	67	59	52	47	43	39	36	33	31	29	28	26	25
E - 4	122	144	98	81	70	61	54	49	44	41	38	35	33	31	29	27	26
D - 3	126	148	100	84	72	63	56	50	46	42	39	36	33	31	30	28	26
C - 2	128	151	103	85	73	64	57	51	47	43	39	37	34	32	30	28	27
B - 1	130	153	104	87	74	65	58	52	47	43	40	37	35	33	31	29	27
A - 1	147	172	117	98	84	73	65	59	53	49	45	42	39	37	34	33	31
A - 2	165	194	132	110	94	82	73	66	60	55	51	47	44	41	39	37	35
B - 3	167	197	134	112	96	84	74	67	61	56	52	48	45	42	39	37	35
C - 4	171	201	137	114	98	85	76	68	62	57	53	49	46	43	40	38	36
D - 5	176	207	141	117	100	88	78	70	64	59	54	50	47	44	41	39	37
E - 6	183	216	147	122	105	92	81	73	67	61	56	52	49	46	43	41	39
A - 3	188	222	151	126	108	94	84	75	69	63	58	54	50	47	44	42	40
B - 4	195	230	156	130	112	98	87	78	71	65	60	56	52	49	46	43	41
C - 5	205	241	164	137	117	103	91	82	75	68	63	59	55	51	48	46	43
D - 6	220	259	176	147	126	110	98	88	80	73	68	63	59	55	52	49	46
A - 4	220	259	176	147	126	110	98	88	80	73	68	63	59	55	52	49	46
B - 5	234	276	188	156	134	117	104	94	85	78	72	67	63	59	55	52	49
C - 6	256	302	205	171	147	128	114	103	93	85	79	73	68	64	60	57	54
A - 5	264	310	211	176	151	132	117	106	96	88	81	75	70	66	62	59	56
B - 6	293	345	234	195	167	147	130	117	107	98	90	84	78	73	69	65	62
A - 6	330	388	264	220	188	165	147	132	120	110	101	94	88	82	78	73	69

Fertilizer Distribution Table per hectare - SPDE -A																	
Ratchet shaft output gear						31		Input gear of Speed Box								20	
Combination	Grams 50 m Linear	Line Spacing															
		170	250	300	350	400	450	500	550	600	650	700	750	800	850	900	950
F - 1	65	184	125	104	89	78	70	63	57	52	48	45	42	39	37	35	33
F - 2	73	207	141	117	101	88	78	70	64	59	54	50	47	44	41	39	37
E - 1	81	230	156	130	112	98	87	78	71	65	60	56	52	49	46	43	41
F - 3	84	237	161	134	115	101	89	80	73	67	62	57	54	50	47	45	42
E - 2	92	259	176	147	126	110	98	88	80	73	68	63	59	55	52	49	46
D - 1	98	276	188	156	134	117	104	94	85	78	72	67	63	59	55	52	49
F - 4	98	276	188	156	134	117	104	94	85	78	72	67	63	59	55	52	49
E - 3	105	296	201	168	144	126	112	101	91	84	77	72	67	63	59	56	53
D - 2	110	311	211	176	151	132	117	106	96	88	81	75	70	66	62	59	56
C - 1	114	322	219	183	156	137	122	110	100	91	84	78	73	68	64	61	58
F - 5	117	331	225	188	161	141	125	113	102	94	87	80	75	70	66	63	59
E - 4	122	345	235	196	168	147	130	117	107	98	90	84	78	73	69	65	62
D - 3	126	355	241	201	172	151	134	121	110	101	93	86	80	75	71	67	64
C - 2	128	362	246	205	176	154	137	123	112	103	95	88	82	77	72	68	65
B - 1	130	368	250	209	179	156	139	125	114	104	96	89	83	78	74	70	66
A - 1	147	414	282	235	201	176	156	141	128	117	108	101	94	88	83	78	74
A - 2	165	466	317	264	226	198	176	158	144	132	122	113	106	99	93	88	83
B - 3	167	473	322	268	230	201	179	161	146	134	124	115	107	101	95	89	85
C - 4	171	483	329	274	235	205	183	164	149	137	126	117	110	103	97	91	86
D - 5	176	497	338	282	241	211	188	169	154	141	130	121	113	106	99	94	89
E - 6	183	518	352	293	251	220	196	176	160	147	135	126	117	110	104	98	93
A - 3	188	533	362	302	259	226	201	181	165	151	139	129	121	113	107	101	95
B - 4	195	552	376	313	268	235	209	188	171	156	144	134	125	117	110	104	99
C - 5	205	580	394	329	282	246	219	197	179	164	152	141	131	123	116	110	104
D - 6	220	621	423	352	302	264	235	211	192	176	163	151	141	132	124	117	111
A - 4	220	621	423	352	302	264	235	211	192	176	163	151	141	132	124	117	111
B - 5	234	663	451	376	322	282	250	225	205	188	173	161	150	141	133	125	119
C - 6	256	725	493	411	352	308	274	246	224	205	190	176	164	154	145	137	130
A - 5	264	746	507	423	362	317	282	254	230	211	195	181	169	158	149	141	133
B - 6	293	828	563	469	402	352	313	282	256	235	217	201	188	176	166	156	148
A - 6	330	932	634	528	453	396	352	317	288	264	244	226	211	198	186	176	167

Note: Spring with 1" pitch

Table 06

CALCULATION

NOTE

The fertilizer tables on pages 41 and 42 were calculated with a 1" pitch spring. Optionally, there are other types of spring that can increase (2" pitch spring) or decrease the fertilizer distribution (3/4" and 5/8" pitch springs).

CONVERSION OF THE DISTRIBUTION SPRINGS - TABLE 20/31				
EXAMPLES:				
Springs	Spacing	Regulation	Percentage	Kg per Ha
Pitch 2"	170 mm	F-1	-	160
Pitch 1"		F-1	- 60 %	100
Pitch 3/4"		F-1	- 60 %	40
Pitch 5/8"		F-1	- 60 %	16

CONVERSION OF THE DISTRIBUTION SPRINGS - TABLE 31/20				
EXAMPLES:				
Springs	Spacing	Regulation	Percentage	Kg per Ha
Pitch 2"	170 mm	F-1	-	384
Pitch 1"		F-1	- 60 %	204
Pitch 3/4"		F-1	- 60 %	81,6
Pitch 5/8"		F-1	- 60 %	32,64

Table 07

WARNING

The tables above were prepared for distribution with springs de of different pitches with fertilizer (N.P.K) of a good particle size and with a hectoliter weight of 1200 grams per liter.

CÁLCULO PRÁTICO P/ DISTRIBUIÇÃO DE ADUBO

To distribute other quantities of fertilizer in spacings and areas other than those shown in the distribution tables, use the formula below to proceed as such:

1 - Determine the spacing and the amount of fertiliser to be distributed by Bushel (Aa) or Hectare (Ha).

2- Example: Seeder with spacing of 170 mm, to distribute 500 kg of fertilizer per Ha, use the formula below

Formula: $X = \frac{E \times Q}{A} \times D$

Formula Data:
E = Line Spacing (mm)
Q = Amount of fertilizer to be distributed [kg]
A = Area to be fertilized [m^2]
D = distance of 50 meters (test)
X = Grams of fertilizer in 50 meters

Resolve: $X = \frac{170 \times 500}{10.000} \times 50$

$X = 85{,}00 \times 50 = 4{,}250$

X = 4.250 grams in 50 meters per line.

NOTE

When you get the result, adjust the seeder to distribute the amount found, or the one that comes closest to the predetermined space for the test.

WARNING

The variation in the speed of work affects the uniform distribution of the seeds .When exchanging the seed batch or the manufacturer of the fertilizer, it is necessary to check again. After the first day of planting, check all adjustments again.

PRACTICAL TEST TO ASSESS THE QUANTITY OF FERTILISER AND SEED DISTRIBUTION.

1- For greater precision in the distribution of fertilizer or seeds, test the quantity to be distributed at the planting site, because for each ground there is a different condition. Proceed as follows:

2- As far as possible, always use the same tractor and operator who will plant.

3- Always check and maintain the correct tire pressure calibration **SPDE -A** Which should be at **32 lb / in²**. 4- Note the distance of the test in the table, we opted for 50 linear meters.

5- Fill the tanks of the seeder at least halfway. Run an average of 10 meters outside the test area so that the fertilizer and seeds fill the dosers.

6- Seal the output of seed spouts and place containers to collect the outputs of fertilizer. Move the tractor in the demarcated area, always at the same speed you will plant, from 5 to 7 km/h.

7- After traversing the demarcated space, remove the seal from the seed spout and collect the seeds for counting and also collect the fertilizer to weigh the amount collected. If necessary, increase or decrease the amount of seed and fertilizer to be distributed, check the table.

8- When you reach the desired amount, still in the area, move the tractor at the same speed, however, letting the fertilizer and seed reach the soil to check for the uniformity of the distribution.

IMPORTANT | ***We suggest that a practical test be carried out on the distribution of the fertilizer and seed, over 50 mts, to later compare the results of the fertilizer and the seed.***

CALCULATION

PLANTING LINES

OPTIONAL LINE MODELS (FIGURES 43)

Larger right line with heavy iron compacting wheel

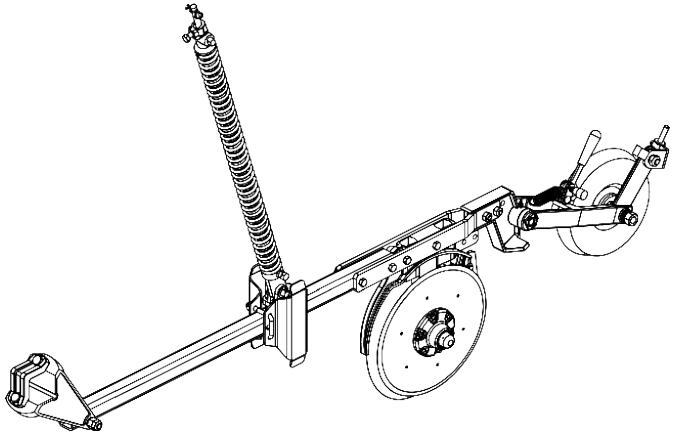

Larger left line with heavy iron compacting wheel

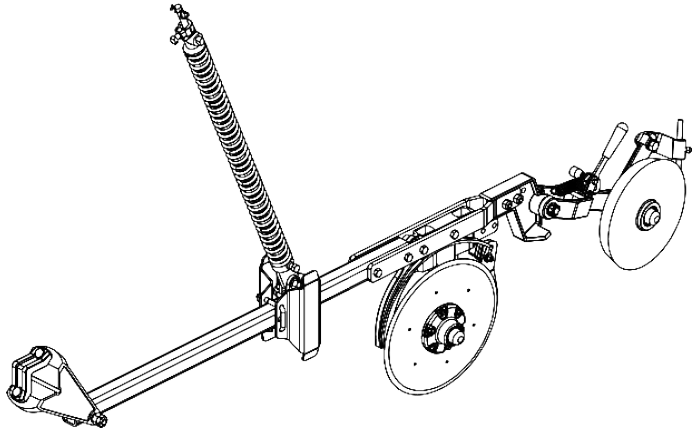

Larger side right line with heavy iron compacting wheel

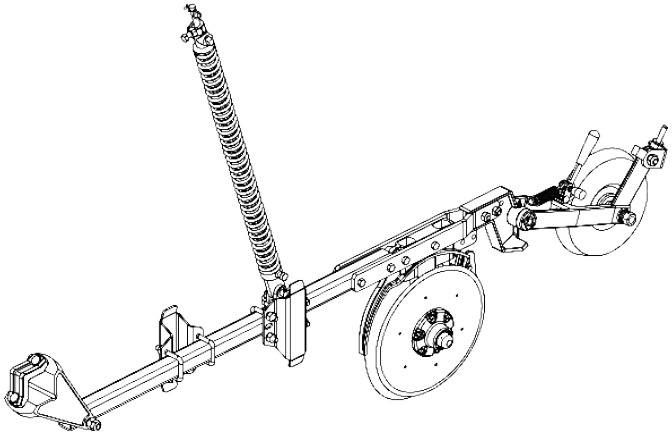

Smaller right line with heavy iron compacting

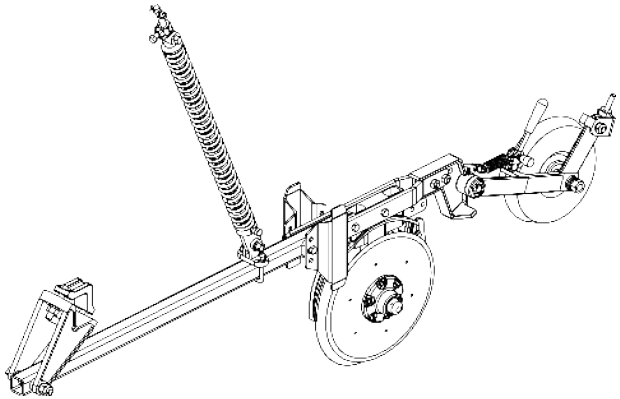

Smaller left line with heavy iron compacting wheel

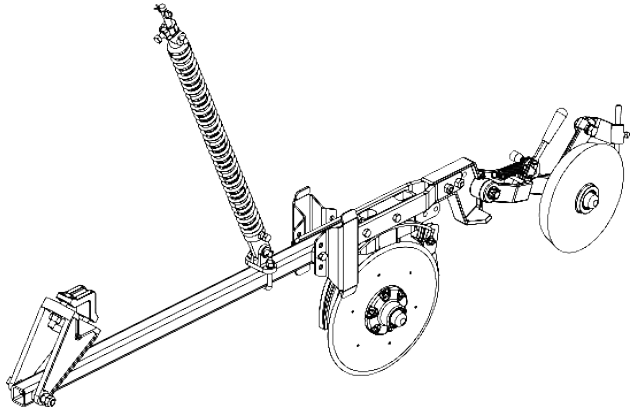

Smaller side left line with heavy iron compacting wheel

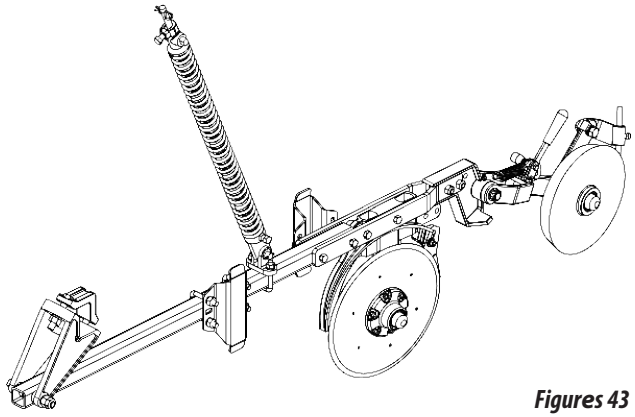

Figures 43

OPTIONAL LINE MODELS - CONTINUATION (FIGURES 43)

Larger right line w/ ridged cutting disc w/ heavy iron convex compacting wheel

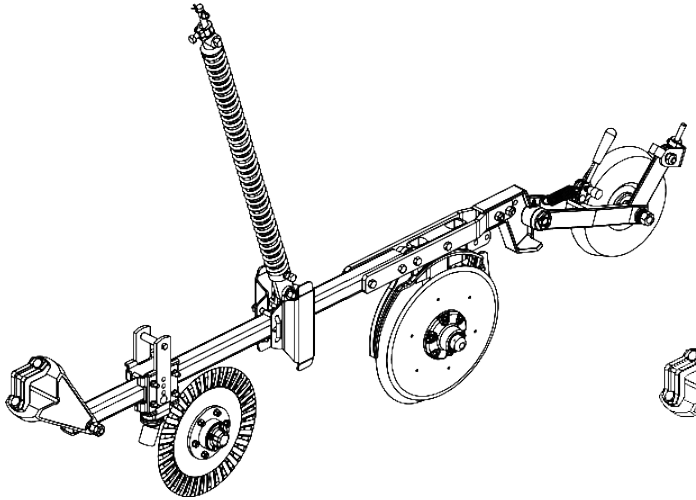

Larger left line w/ ridged cutting disc w/ heavy iron convex compacting wheel

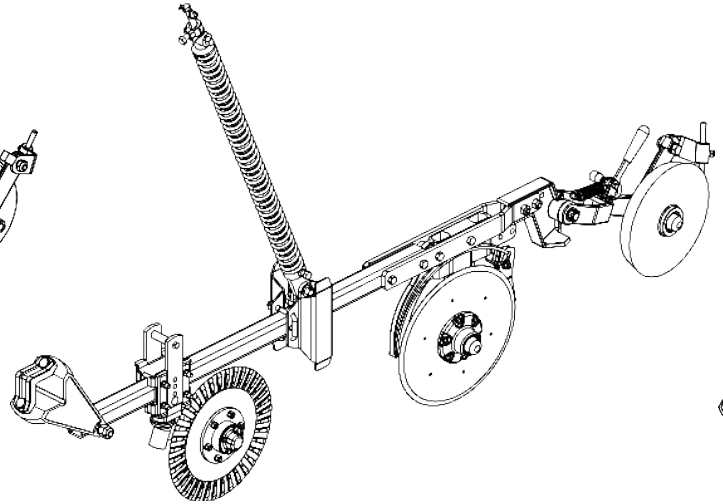

Larger right side line with ridged cutting disc with heavy iron compacting wheel

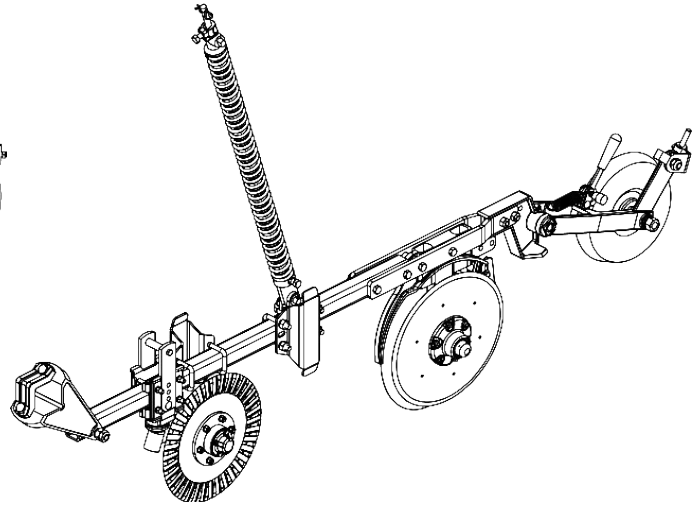

Smaller right line w/ ridged cutting disc w/ heavy iron convex compacting wheel

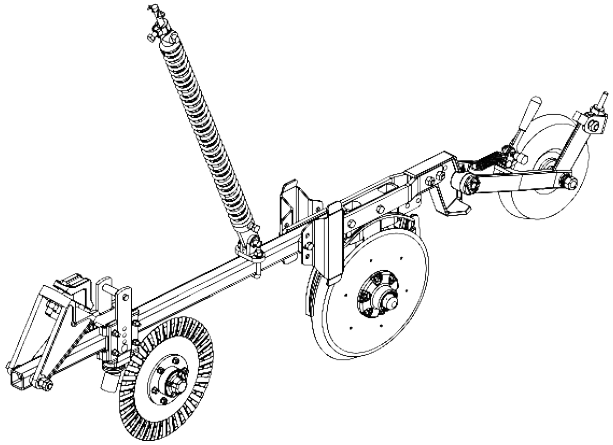

Smaller left line w/ ridged cutting disc w/ heavy iron convex compacting wheel

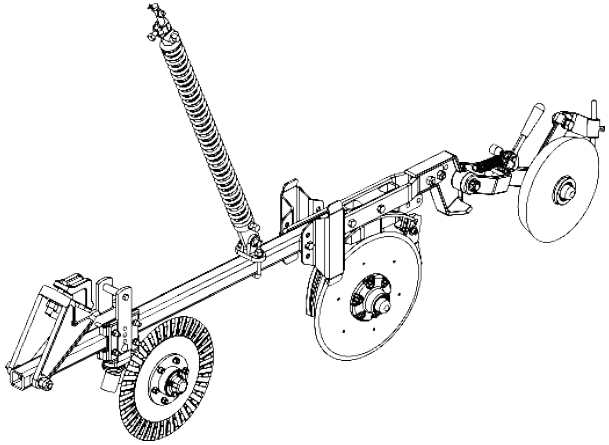

Smaller left side line with ridged cutting disc with a heavy iron compactor wheel

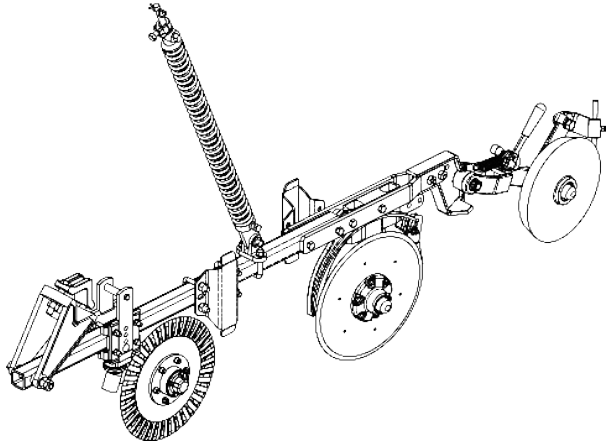

Figures 43

PLANTING LINES

PLANTING LINES

OPTIONAL LINE MODELS - CONTINUATION (FIGURES 43)

Larger right line w/ ridged cutting disc w/ "V" compacting wheel - Row Spacing 170 mm

Larger right line w/ ridged cutting disc w/ "V" compacting wheel - Row Spacing 250 mm

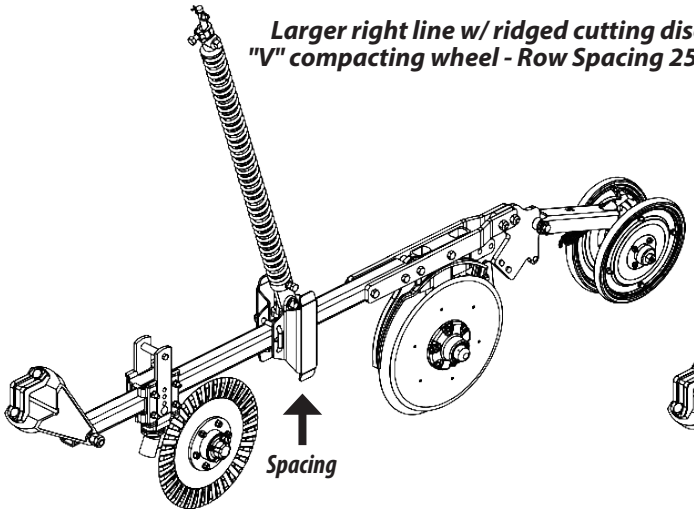

Larger left line w/ ridged cutting disc w/ "V" compacting wheel - Row Spacing 170 mm

Larger left line w/ ridged cutting disc w/ "V" compacting wheel - Row Spacing 250 mm

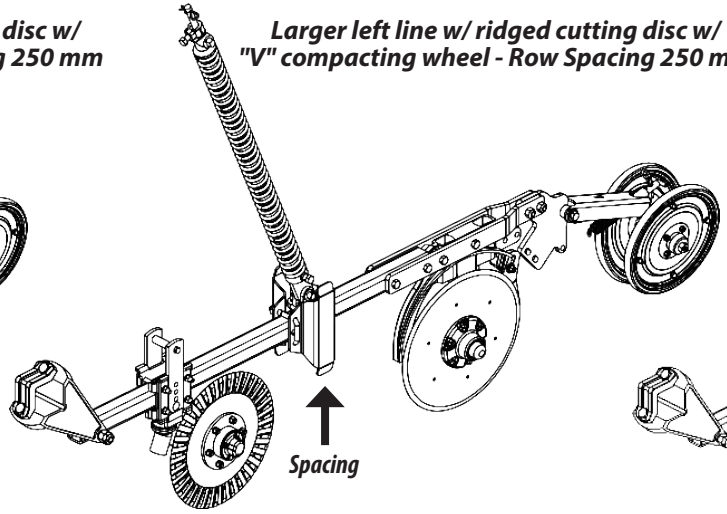

Larger side right line w/ ridged cutting disc w/ "V" compacting wheel - Row Spacing 170mm

Larger side right line w/ ridged cutting disc w/ "V" compacting wheel - Row Spacing 250mm

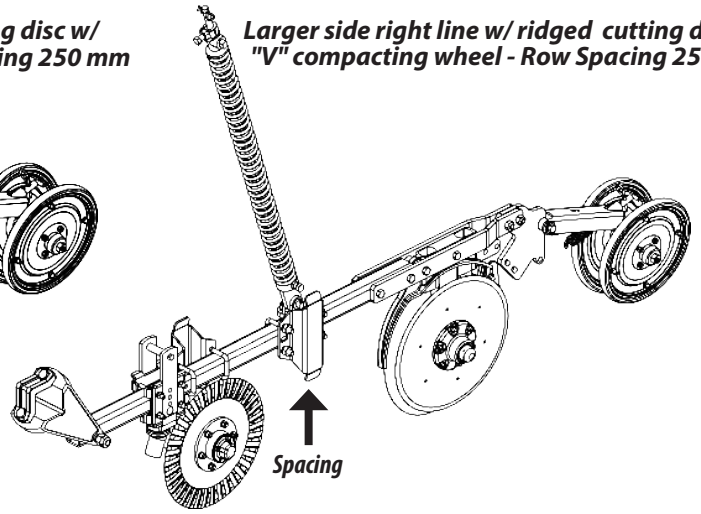

Smaller right line w/ ridged cutting disc w/ "V" compacting wheel - Row Spacing 170mm

Smaller right line w/ ridged cutting disc w/ "V" compacting wheel - Row Spacing 250mm

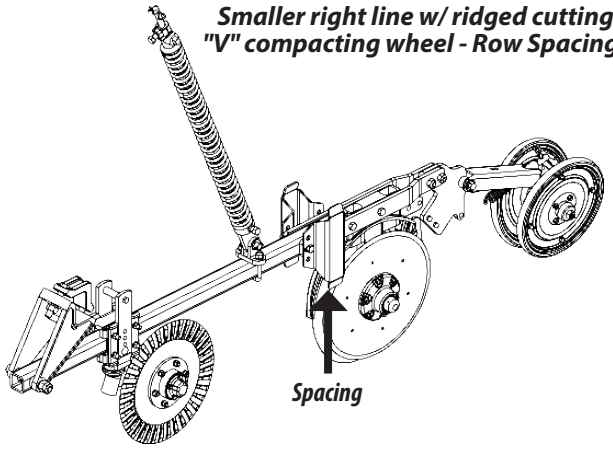

Smaller left line w/ ridged cutting disc w/ "V" compacting wheel - Row Spacing170mm

Smaller left line w/ ridged cutting disc w/ "V" compacting wheel - Row Spacing250mm

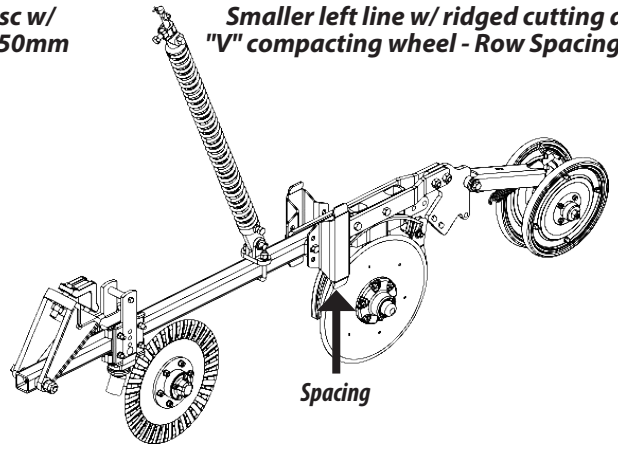

Smaller side left line w/ ridged cutting disc w/ "V" compacting wheel - Row Spacing 170mm

Smaller side left line w/ ridged cutting disc w/ "V" compacting wheel - Row Spacing 250mm

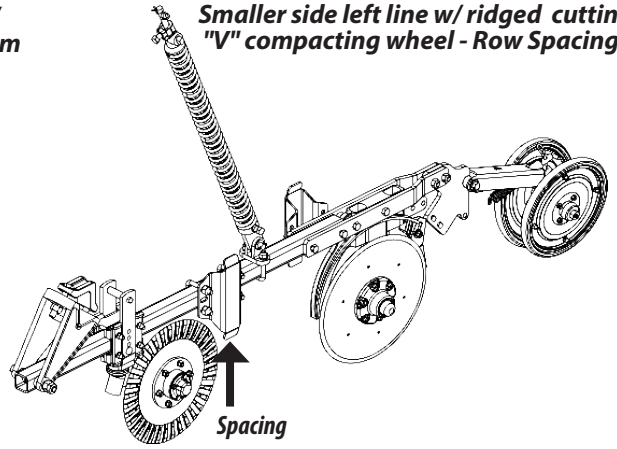

Figures 43

PRESSURE ADJUSTMENT OF SPRINGS (FIGURE 44 / TABLE 08)

The depth adjustment of the seeder is done by the pressure of the springs and the piston limiters.
The pressure of the springs depends on the conditions of the soil and the sowing system (conventional or direct) that allows different adjustments, observing the combinations of the springs as follows:

Table 08

System of TRIPLE SPRINGS	System of DOUBLE SPRINGS	System of SIMPLE SPRINGS
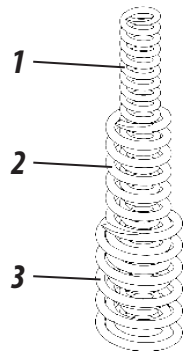	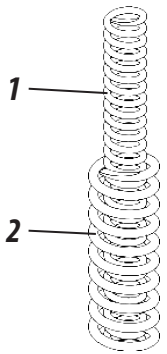	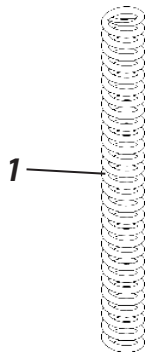
Internal Spring (1), Intermediate (2) and external (3).	*Spring (1), and Intermediate (2).*	*Internal Spring (1).*
For planting directly in COMPACTED SOIL	*For planting directly SOIL W/ MEDIUM COMPACTION*	*For planting directly and conventional for SOIL W/ LOW COMPACTION*

IMPORTANT

The excess pressure in the springs causes the machine to be raised by the reaction of the soil being penetrated

1- Loosen the bushing (4) through the screw (5) and secure it to the rod in order to release the lowering of the line. Secure the bushing about 5 cm above the rod support (6).

2- Loosen the bushing (7) through the screw (8) and secure the above in order to give pressure to the springs (9) for better penetration of the line.

Figura 44

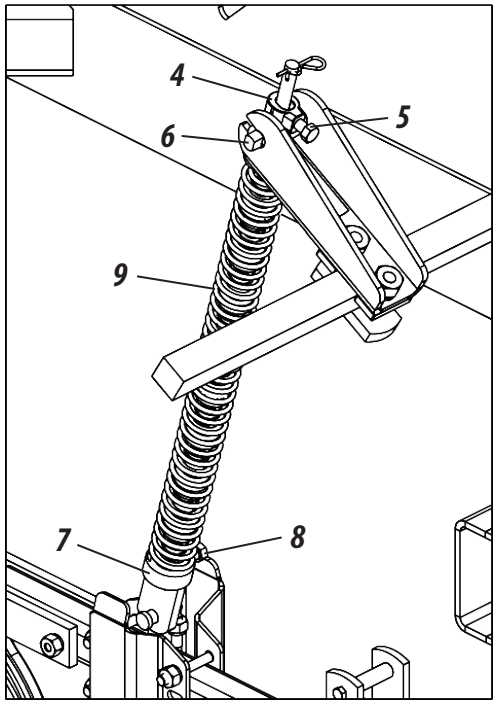

ATTENTION

The depth capacity of the seeder is due to the appropriate and combined pressure of the active elements of the seeder. During the planting on land where there are variations in soil moisture or other factors, check the depth of work several times.

ADJUSTMENTS OF THE LINES

ADJUSTMENTS OF THE LINES

LIMITERS (TABLE 09)

The limiting rings are used to limit the course of the piston, causing the disc lift bracket to compress the springs by giving the necessary pressure. Limiters are provided in the following sizes:

Table 09

02 Limiting rings of ø 51 x 49,5 mm	02 Limiting rings of ø 42 x 49,5 mm	02 Limiting rings of ø 42 x 25 mm
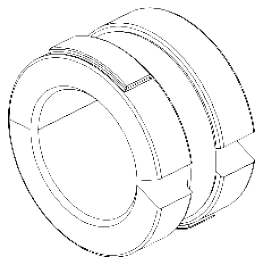	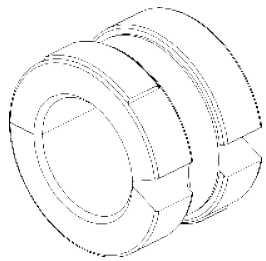	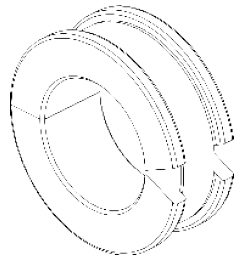
Limiter code 53480500128	Limiter code 53480500098	Limiter code 53480500063

IMPORTANT ***The limiters can be used as follows: 25, 50 and 75mm limiting of the course of the piston.***

ATTENTION ***Place the limiting rings on both sides of the seeder to avoid damage to the chassis.***

DEPTH LIMITER FLANGE (FIGURE 45

The depth limiter flange (1) is mounted on the double disc (2) and is intended to determine the depth of position of the fertilizer and seed.

ATTENTION

The depth limiting flap (1) has 3 models as shown on figures 64 on page 65.

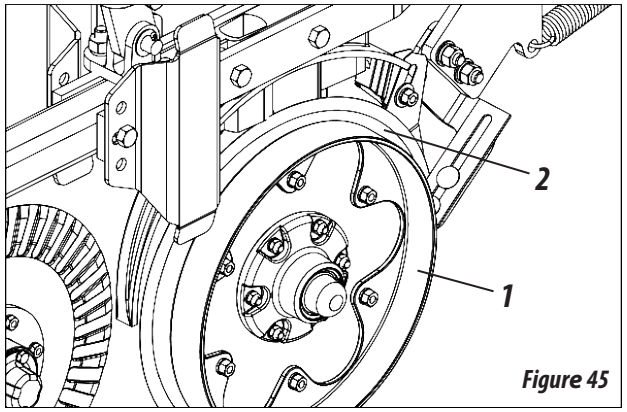

Figure 45

ADJUSTMENT OF THE "V" COMPACTOR WHEEL (FIGURE 46)

The compactor wheel (1) is used to close the groove sideways, causing the soil to be immediately placed on the seed, avoiding much compaction, facilitating germination and development of the plant. To adjust the pressure of the "V" compactor wheels, proceed as follows:

HIGHER PRESSURE:
Remove the latch (3), pull the pin (3) out and lock again.

LESS PRESSURE:
Remove the lock (2), push the pin (3) in and lock it again.

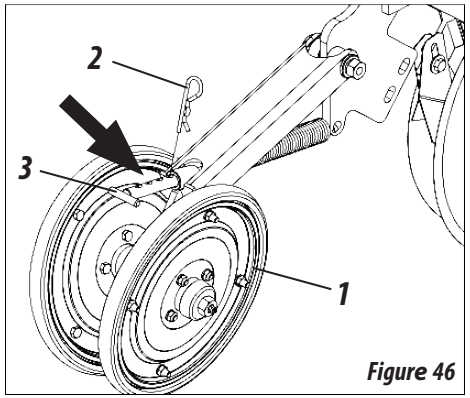

Figure 46

ATTENTION

Make the same adjustment for all "V" compactor wheels and consider the soil type, seed and depth of planting, so as not to affect the free emergence of the plants.

ADJUSTMENT OF THE IRON COMPACTOR WHEEL - OPTIONAL (FIGURES 47)

The iron compacting wheel (1) has the purpose of pressing the groove causing the soil to be immediately placed on the seed avoiding much compactness, facilitating the germination of the plant. To adjust the pressure of the iron compacting wheel (1) proceed as follows:

1- First pull the handle (2) to unlock the lever (3).

2- Then adjust the lever (3) backwards or forwards, giving greater or lesser pressure on the iron compactor wheel (1).

3- Finish by releasing the handle (2) locking the lever (3).

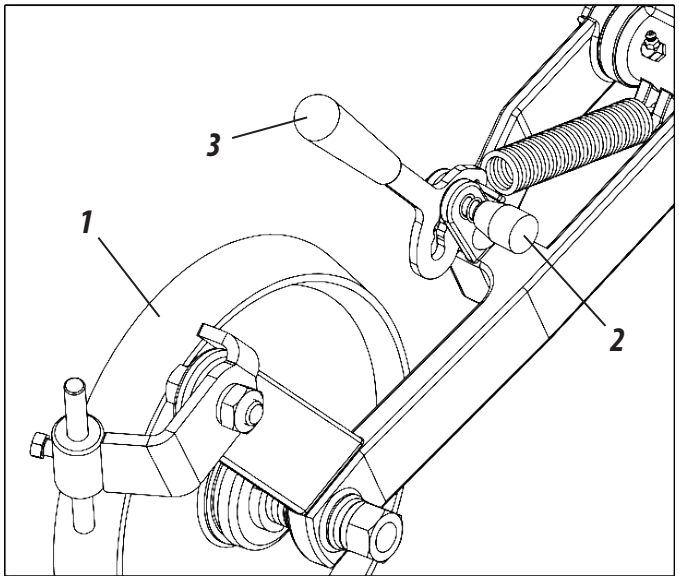

Figures 47

4- To move the iron compactor wheel (1) horizontally, change the position of the washers (4) until you reach the desired position.

5- To adjust the wiper (5) in the vertical position (6) and slide it to the desired position.

6- To adjust the distance between the double disk (7) and the iron compactor wheel (1), release the screws (8), lock washers (9) and nuts (10), adjust the desired distance and retighten the bolts (8), lock washers (9) and nuts (10).

Figures 47

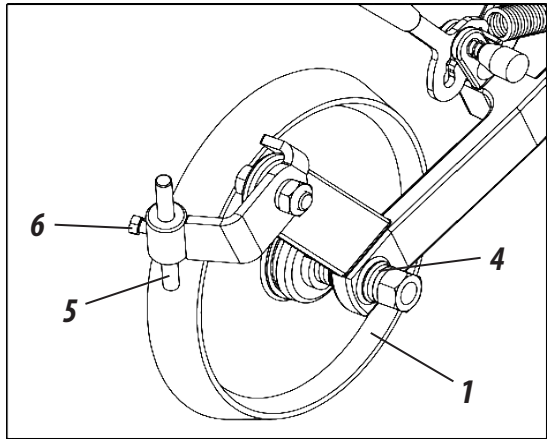

MORE PRESSURE:
Move the lever (3) back, giving greater pressure on the wheel (1).

LESS PRESSURE:
Move the lever (3) forward, giving less pressure on the wheel (1).

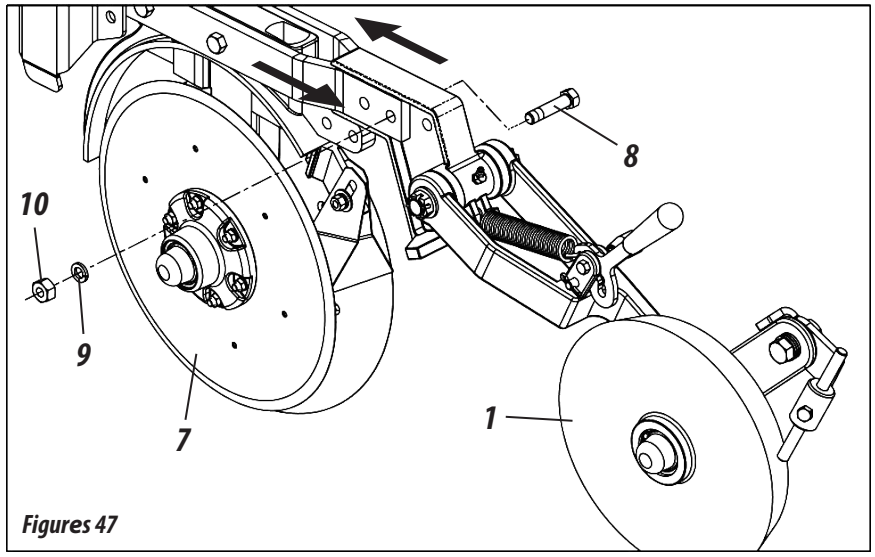

Figures 47

⚠ ATTENTION

Perform the same setting for all iron compactor wheels and consider the type of soil, seed and planting depth, to not affect the emergence of the plantation.

ADJUSTMENTS OF THE LINES

ADJUSTMENTS OF THE LINES

ADJUSTMENT OF THE RIDGED OR PLAIN CUTTING DISC (FIGURES 48)

To adjust the depth of the ridged or plain cutting disc (1), proceed as follows:

1- Remove the lock (1) and the pin (2), adjust the height of the bracket (3) and fix the bracket again.

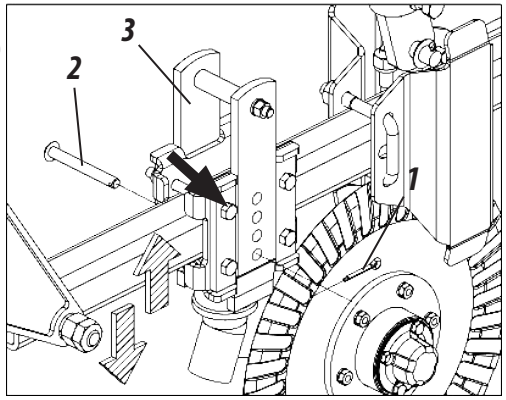

Figures 48

To move the ridged or plain cutting disc (1) in the horizontal position, proceed as follows:

2- Loosen the bolts (4), pressure washers (5) and nuts (6), move the disc to the desired position and lock it again

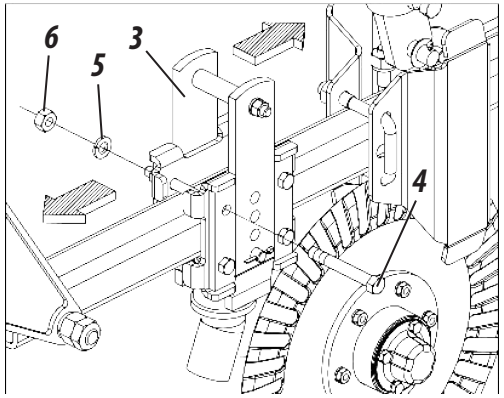

Figures 48

ATTENTION ***When making the adjustments mentioned above, they should be done to all lines, considering the type of soil, seed and depth of planting, so as not to affect the free emergence of the plants.***

ADJUSTMENT OF THE DOUBLE DISK CLEANERS (FIGURE 49)

The dual disc (1) has wiper blades (2) which are flexible and adjustable to remove the soil adhering to the discs. To adjust the wipers (2) proceed as follows:

1- Loosen the screw (3), adjust the cleaners (2) in the ideal position and tighten the screw (3).

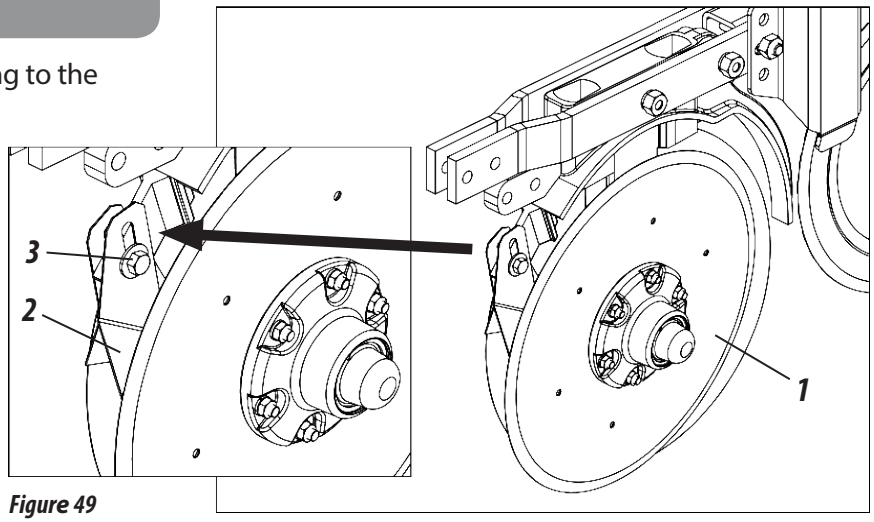

Figure 49

ATTENTION ***When finalizing the adjustment, repeat this procedure on all cutting discs, avoiding variation between the lines.***

COUNTERWEIGHTS (FIGURES 50 / TABLE 10)

The **SPDE -A** has counterweights (1) which are placed in the rear tube (2) of the seeder. These counterweights have the purpose of aiding in penetrating of hard terrain, especially when there is a tendency to skid the wheels. Weighing 16.94kg each, the counterweights (1) can be removed or fitted easily.

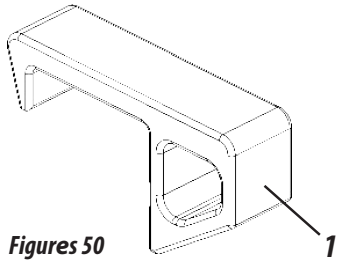

Figures 50

Models	Number of Counterweights	Total (KG)
SPDE-A	30	508

Table 10

To place or remove counterweights (1), proceed as follows:

1- Loosen the bolts (3), plain washers (4), lock washers (5) and nuts (6), remove the platform plate (7). Then remove the screws (8), pressure washers (9), plain washers (10) and the plates (11).

2- Then, insert one on each side, another in the middle, and so on. Finish by assembling the components again.

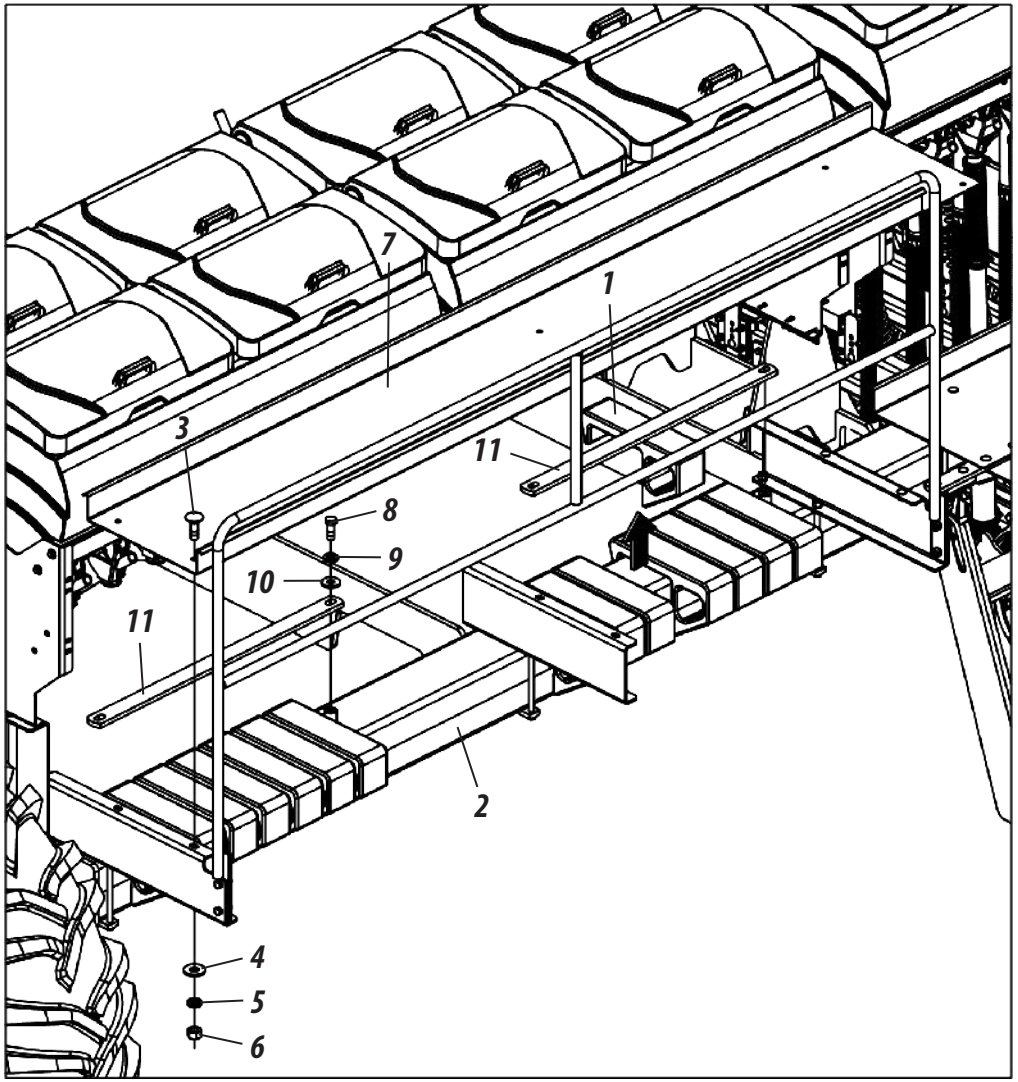

Figures 50

IMPORTANT

During sowing, check the depth a few times, especially when there is moisture variation

OPERATION

RECOMMENDATIONS FOR OPERATION

01 - After the first day of work with the seeder, retighten all screws and nuts. Check the condition of the pins and locks.

02 - Do not maneuver or reverse with the lines down on the ground.

03 - Observe the lubrication intervals.

04 - When filling the tanks, check for objects in them, such as nuts, bolts, etc. Always use seeds free from impurities.

05 - Always observe the operation of the seeds distribution mechanisms and also the adjustments established at the beginning of planting.

06 - Always keep the seeder leveled, the tractor drawbar must remain fixed and the working speed should remain constant.

07 - Always check the depth of seeds and the pressure of the compactor wheels.

08 - Note the position of the fertilizer in relation to the seed in the soil.

09 - When performing any checks or maintenance on the seeder, lower it to the ground and switch off the tractor engine.

10 - Do not make sharp turns with the seeder during work, especially in direct planting. The components of the lines may be damaged.

11 - Do not partially activate the hydraulic cylinders. The activation for raising or lowering of the seeder should always be complete.

12 - The sower has several settings but only local conditions can determine the best setting.

13 - Only fill the seeder in the workplace.

14 - Do not transport or work with an overload on the seeder.

15 - The right and left side readings are made by observing the sower from behind.

16 - The **SPDE -A** seeder operates more efficiently in the range of 5 to 7 km / h.

17 - If in doubt, never operate or handle the seeder, contact Post Sales.

18 - Telephone: 0800-152577 or Email: posvenda@baldan.com.br

TIRE PRESSURE (FIGURE 51)

1- Tires should always be properly calibrated to avoid premature wear due to excess or lack of pressure, also ensuring accuracy in distribution.
2- The calibration of the **SPDE -A** tires should be of **32 lb / in².**

Figure 51

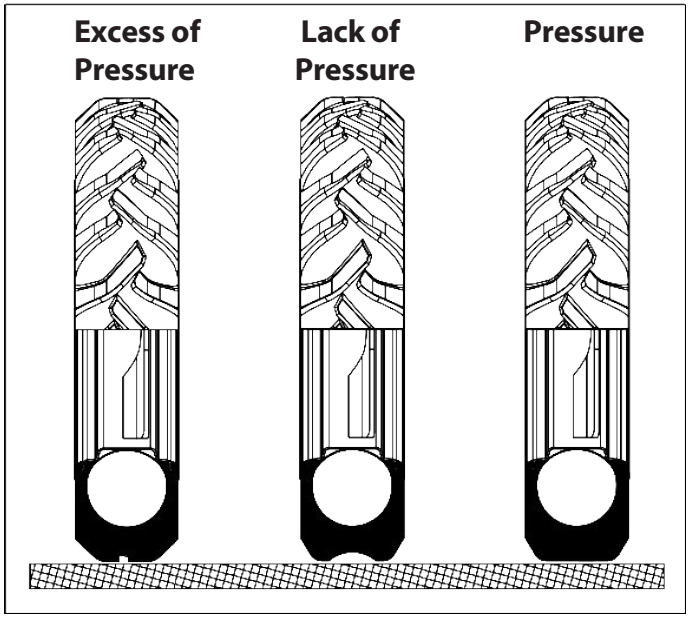

ATTENTION

When calibrating the tires of the seeder, do not exceed the recommended tire calibration. Always keep all tires of the same model with the same calibration to avoid wear and maintain uniformity of planting.

NOTE

If necessary, put 3/4" of water in the tires and maintain the same recommended calibration.

LUBRIFICATION

3- Lubrication is indispensable for the good performance and durability of the **SPDE -A,** contributing to the maintenance cost savings.

4- Before starting the operation, carefully lubricate all grease fittings, always observing the greasing intervals on the following pages. Make sure of the lubricant quality, regarding its efficiency and purity, avoid using products contaminated with water, earth and other agents.

TABLE OF GREASE AND EQUIVALENTS (TABLE 11)

MANUFACTURER	*RECOMMENDED GREASE TYPES*
Petrobrás	Lubrax GMA 2
Atlantic	Litholine MP 2
Ipiranga	Super Graxa Ipiranga Ipíranga Super Graxa 2 Ipiflex 2
Castrol	LM 2
Mobil	Mobilgrease MP 77
Texaco	Marfak 2 Agrotex 2
Shell	Retinax A Alvania EP 2
Esso	Multipurpose grease H
Bardahl	Maxlub APG 2 EP

Table 11

IMPORTANT

If there are other lubricants and/or equivalent grease brands listed in this table, refer to the lubricant manufacturer's own technical manual.

MAINTENANCE

MAINTENANCE

LUBRICATE EVERY 10 HOURS OF WORK (FIGURES 52)

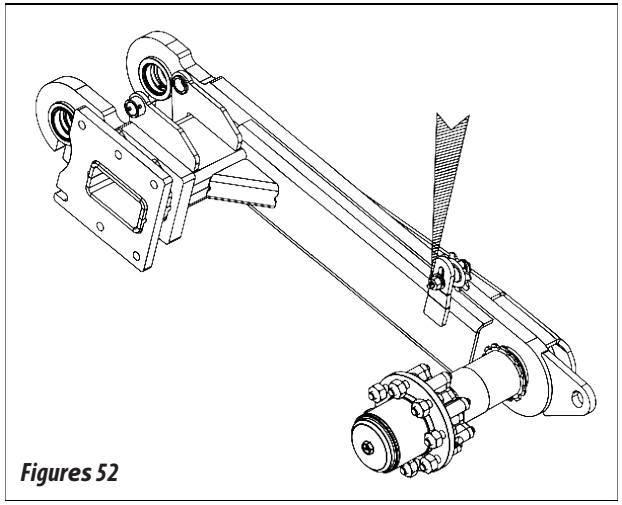

Figures 52

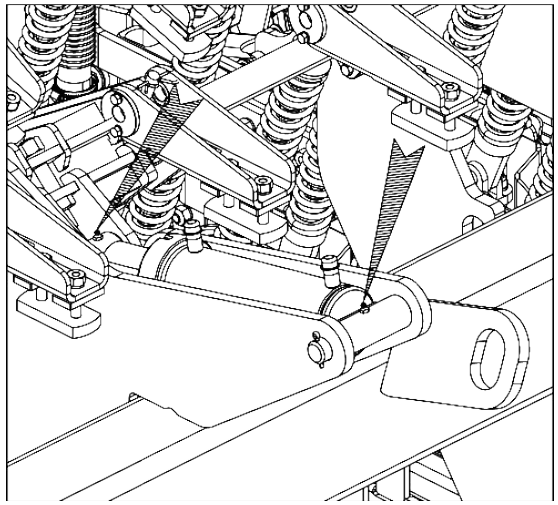

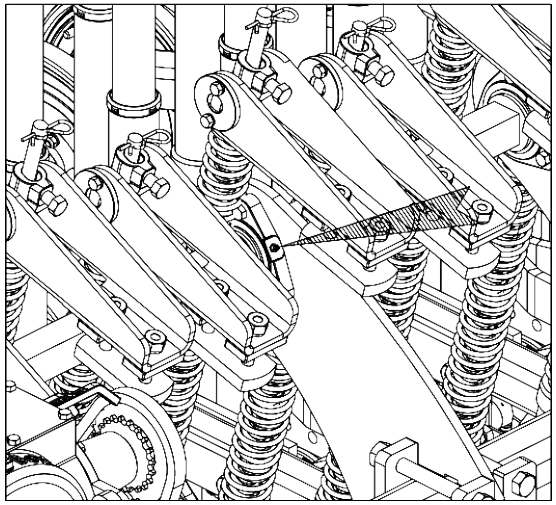

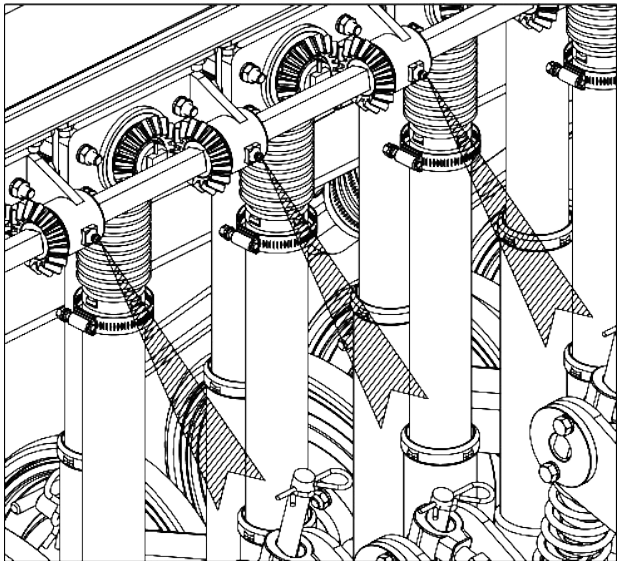

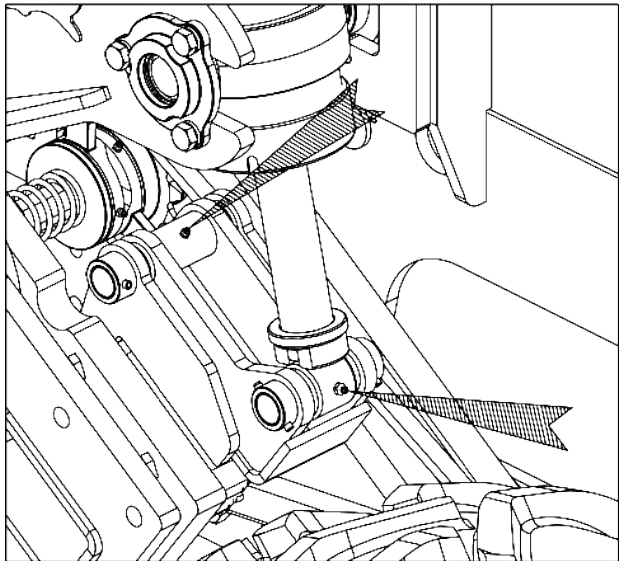

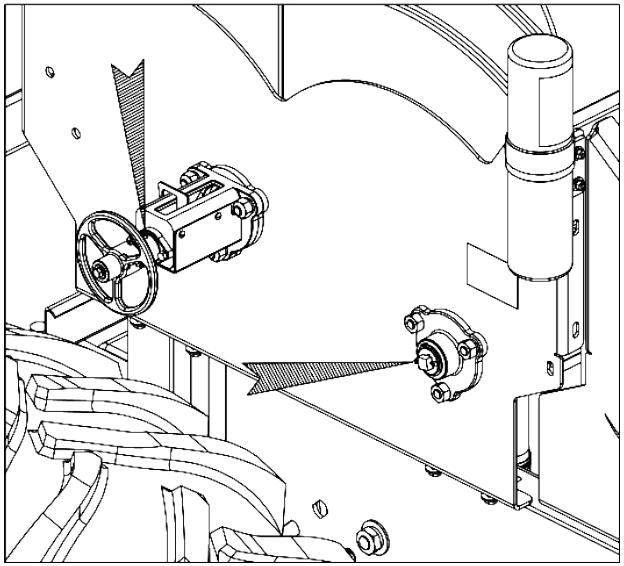

LUBRICATE EVERY 10 HOURS OF WORK - CONTINUATION (FIGURES 52)

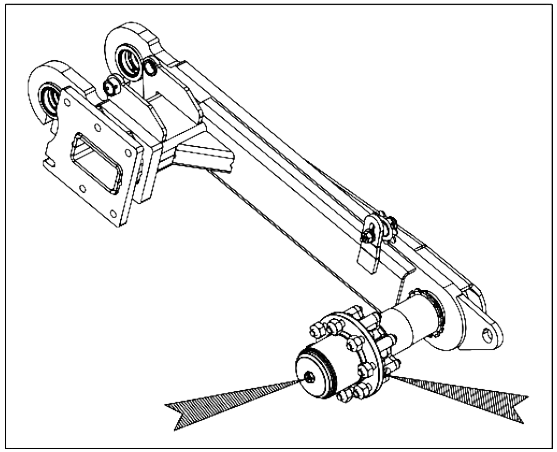

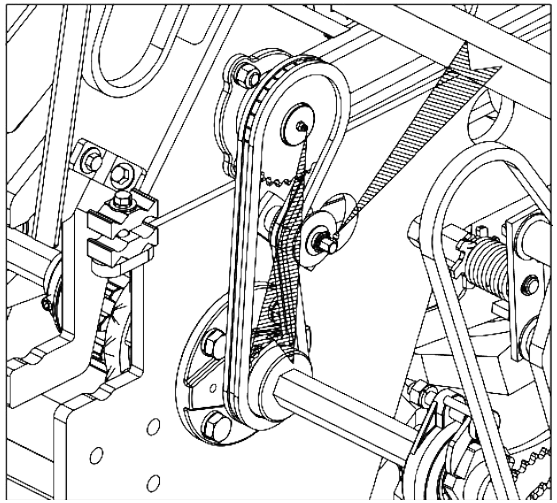

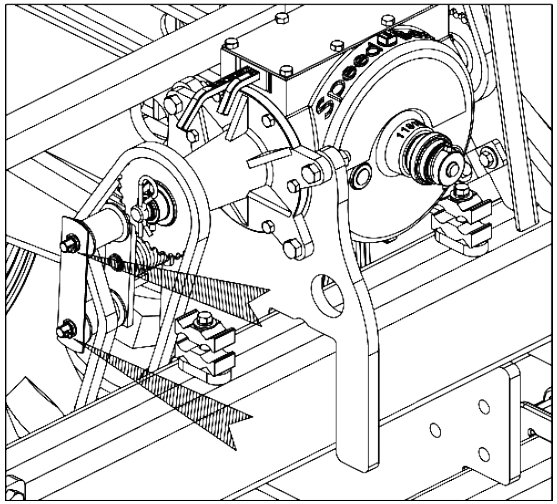

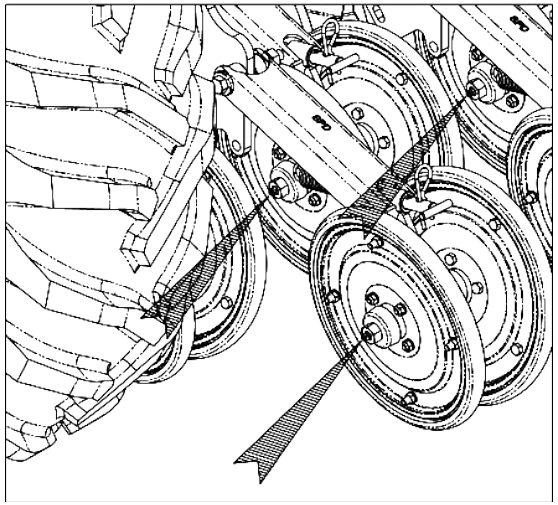

Figures 51

To lubricate the line markers hub (1) proceed as follows:

1- Remove the retaining ring (2) from the hub (3). Examine the bearings and if there are gaps, adjust using the castle nut (4). Place new grease on the cap (5). Replace the cap (5) on the hub and secure it with the retaining ring (2).

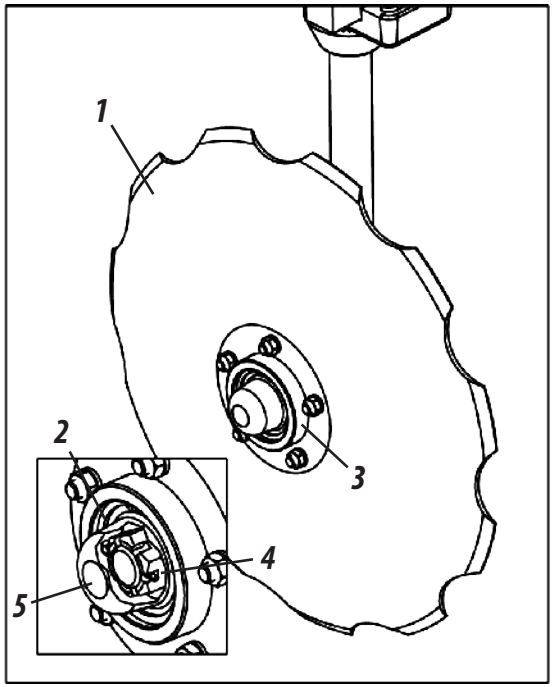

Figures 52

ATTENTION

Before removing the cap (5), clean the outside so as not to contaminate the inside.
Do not put excess grease, observe the lubrication intervals.

MAINTENANCE

LUBRICATE EVERY 30 HOURS OF WORK (FIGURES 53)

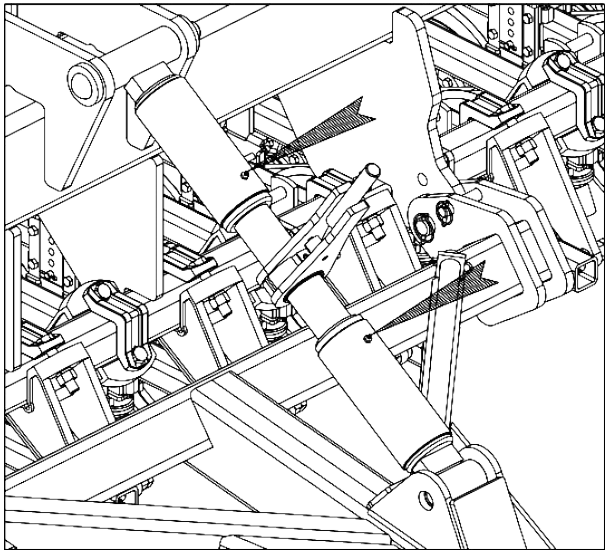

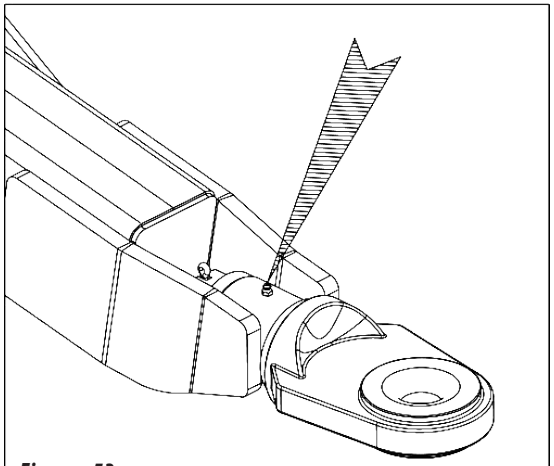

Figures 53

LUBRICATE EVERY 60 HOURS OF WORK (FIGURES 54)

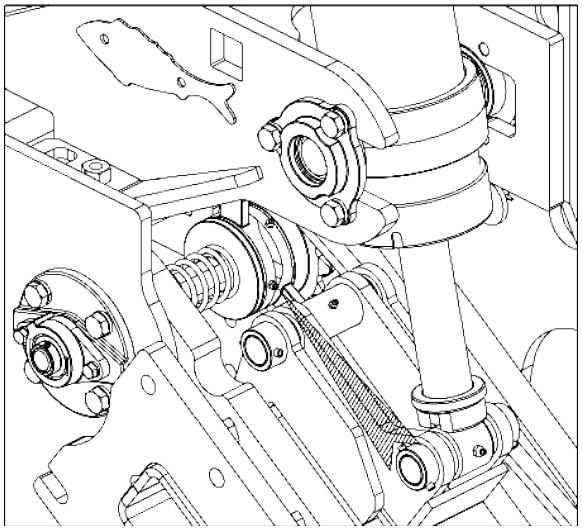

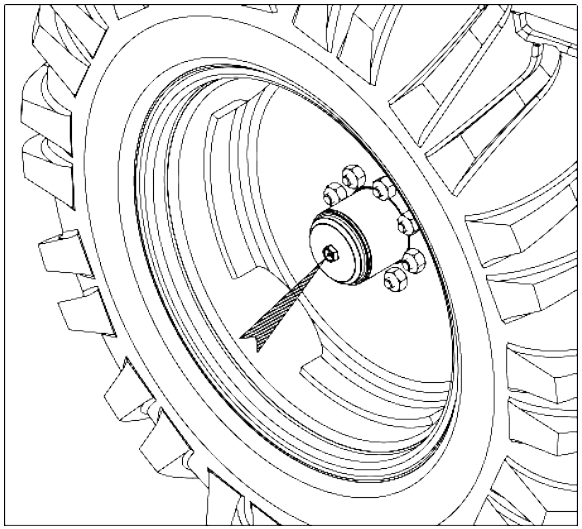

Figures 54

ATTENTION

Do not put excess grease, observe the lubrication intervals.

LUBRICATE EVERY 200 HOURS OF WORK (FIGURES 55)

Periodically lubricate the double disc hubs (1) approximately every 200 hours and at the end of the harvest, to do this proceed as follows:

1- Remove the retention ring (2) of the hub (3).
Examine the bearings, if there are any gaps, adjust through the castle nut (4). Introduction new grease in the cap (5). Replace the cover (5) on the hub and secure it with the retaining ring (2).

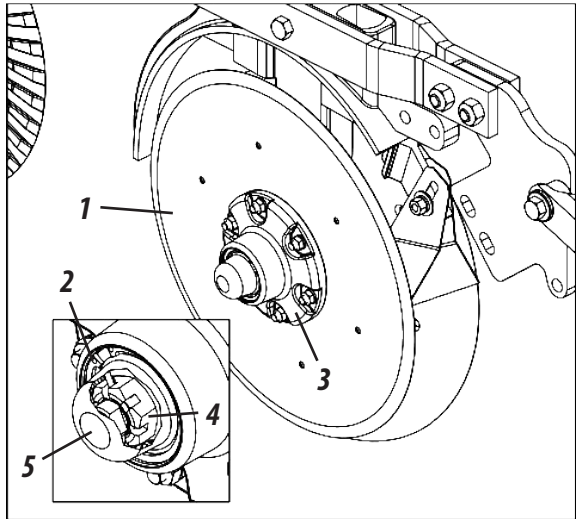

Figures 55

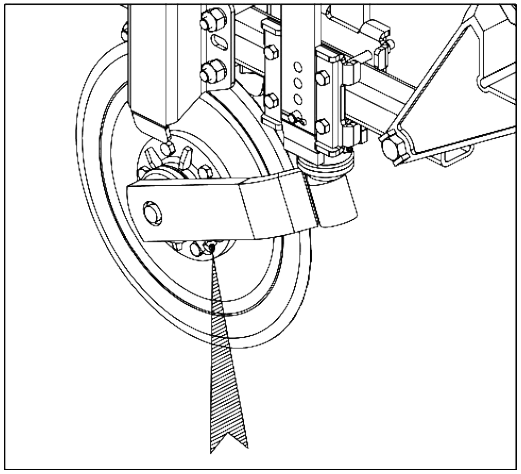

ATTENTION

Before removing the cap (5), clean it on the outside so that it does not contaminate the inside.
Do not over-grease, respect the greasing intervals.

CHAIN TENSION (FIGURE 56)

To tension the chain, proceed as follows:

1- Loosen the nut (1), slide the tensioner (2) by adjusting the chain tension (3).
Then retighten the nut (1).

ATTENTION

Check the chain tension daily 1, the normal loosening should be +/- 1cm in their center.

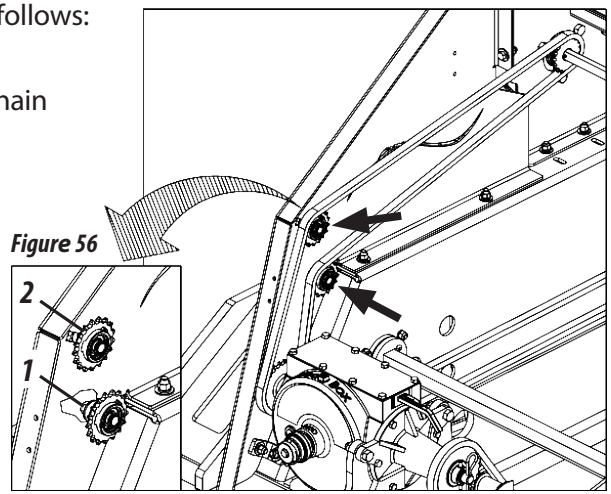

Figure 56

OSCILLATING TENSIONER (FIGURE 57)

The tensioner (1) is of the torsion type (2) for even greater tensioning. If necessary on the tensioner, loosen the spring, turn the spring coupling shaft (2) to the shaft rosette and rest the inner nut

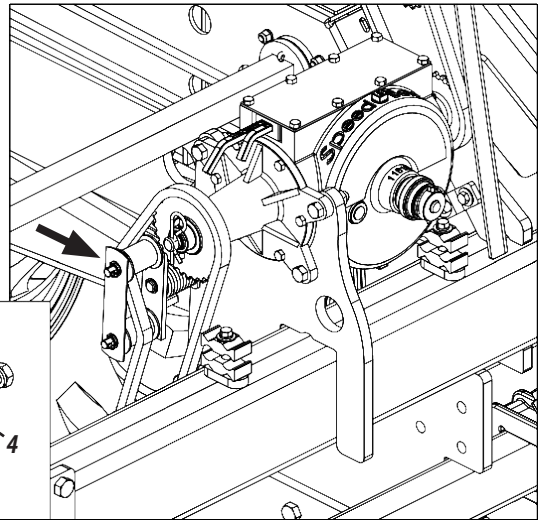

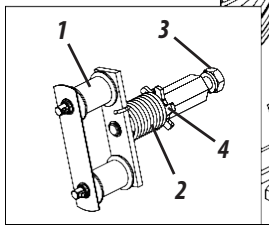

Figure 57

MAINTENANCE

MAINTENANCE

OPERATIONAL MAINTENANCE (TABLE 12)

PROBLEMS	PROBABLE CAUSES	SOLUTIONS
During planting it begins to leak fertilizer through the outlets of the safety devices.	Hoses clogged, foreign body in the fertilizer distribution nuts.	Unclog the fertilizer hoses or remove the upper gutter channel that gives access to the spiral, turn the shaft in the opposite direction until the foreign body leaves and the rod threads.
Fertilizer hub rod does not rotate.	Spiral blocked with moist fertilizer or foreign body.	Unclog the fertilizer distribution threads.
Can not couple couplings quickly on the tractor.	The hoses have been disengaged with pressure or are taking on the weight of the seeder in the hydraulics.	Drain the hoses or place the seeder on the support feet and finally relieve the pressure.
A planting line is less deep than the other.	Different pressure settings on the depth limiting wheels or in the springs of the line.	Set all depth wheels equally and the pressure of the line springs.
The groove is too open during planting.	Sticky soil that sticks to the discs or excessive speed of work.	Decrease the work speed.
The hydraulic cylinders stop operating, lifting the seeder and then doesn't lower or vice versa.	Different quick coupler, sphere male type and female needle type or vice - versa.	Proceed by changing the quick coupler, placing two of the same type.
Strange noise when operating or walking with the loaded seeder.	Loose wheels or wheel hub.	Re-tighten the wheel nuts. Adjust the wheel hub bearings.
The seeder leaves the planting line, sometimes to one side, sometimes to the other, sideways.	Loose tractor drawbar.	Use the pin that comes with the seeder. Attach the tractor drawbar on the central hole.
It is not covering the groove.	Poorly adjusted covering wheels or damp grounds.	Adjust the covering wheel by moving it sideways in relation to the groove.
Very compacted soil, increasing the pressure of the discs and the discs do not operate in the desired depth.	Lack of weight on the seeder.	Place the next, add water to the tires and lock the system of wheel articulation
The ridged discs touch the ground during transport.	The triple spring's rod bushing loosens or the regulated ridged disc is in the upper holes.	Fasten the spring rod bushings and place the ridged disc holder in the lower holes to make them taller.

Table 12

PRECAUTIONS

1- Check the condition of all pins and bolts before beginning to use the seeder.

3- Baldan seeders are used in many applications, requiring knowledge and attention during their handling.

4- Only local conditions can determine the best working form of the seeder.

5- When assembling or dismantling any part of the seeder, use appropriate methods and tools.

6- Observe the lubrication intervals carefully at the various points of the seeder.

7- Always check the parts for wear. If there is a need for replacement, **always request original Baldan parts.**

CLEANING

1- When storing the seeder, carry out overall cleaning and wash only with water. Make sure the paint is not worn, if this happened, paint a full coat, use protective oil and fully lubricate the seeder. Do not use burned oil and / or diesel oil.

2- At the end of planting, proceed as follows:

- Remove the transmission chains and keep them soaked in oil until the next planting.
- Remove all seed hoses immediately by washing them with water and neutral soap. Do not use other chemicals.

3- Fully lubricate the seeder. Check all moving parts of it, if they are worn or loose, make the necessary adjustment or replacement of the parts, leaving the seeder ready for the next planting.

4- After all maintenance work, store the seeder in a covered, dry place, properly supported. Do not allow the discs to come into direct contact with the ground.

5- When connecting or disconnecting the hydraulic hoses from the seeder, do not let the ends touch the ground. Before connecting the hydraulic hoses, clean the connections with a clean, lint-free cloth (**Do not use cotton waste**).

6- Replace all stickers that are damaged or missing. Make everyone aware of their importance and the dangers of accidents when instructions are not followed.

7- We recommend washing the seeder only with water at the beginning of the new planting

ATTENTION

Do not use chemical products to wash the seeder, this may damage the paint and the adhesives.

MAINTENANCE

MAINTENANCE

CLEANING THE FERTISYSTEM DRIVER (FIGURES 58)

After planting, do not leave fertilizer in the tank. To clean, proceed as follows:

1- Remove the nozzle (1) through the quick coupling (2).

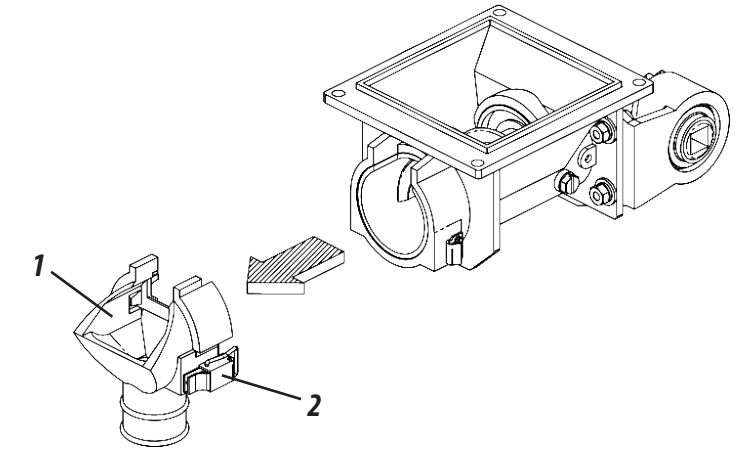

2- Remove the endless spring (3). Pulling it through the ring of the fixing tube (4), also removing the locking ring (5).

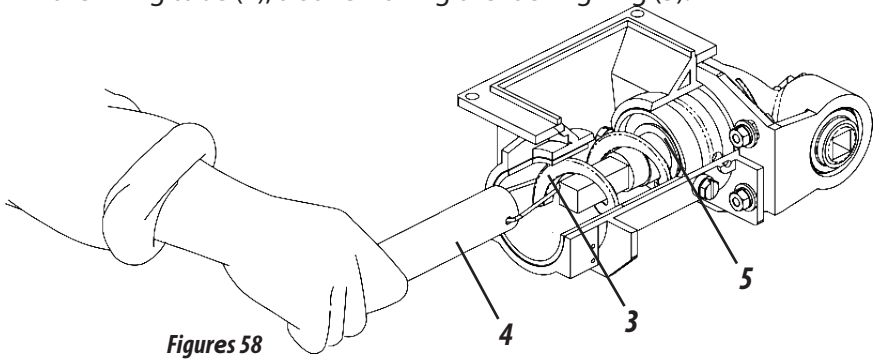

Figures 58

3- After cleaning, replace the endless spring (6), together with the locking ring (7), through the fixer tube (8) observing that the endless spring (6) and the locking ring (7) are well positioned in the base of the drive shaft (10).

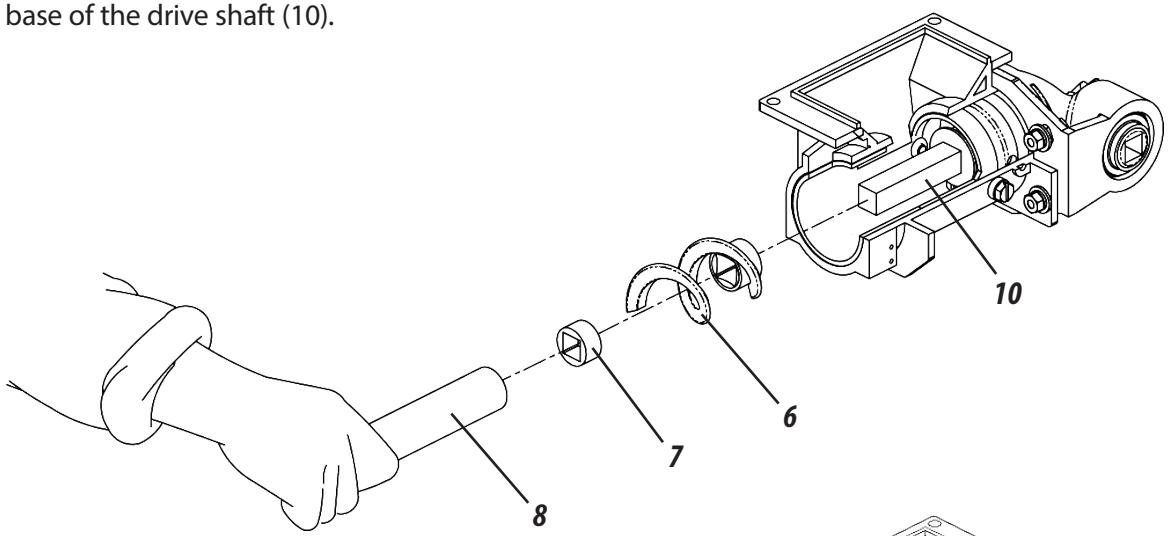

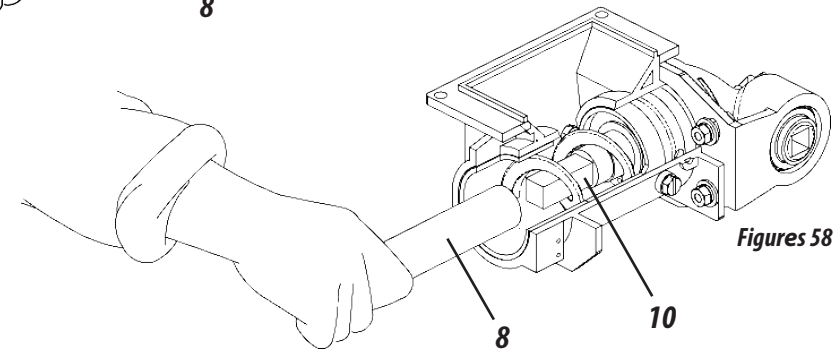

Figures 58

ATTENTION

Keep the endless spring in place with the locking ring. This will avoid damaging the transverse cap when the seeder is not used with the fertilizer or when transporting the seeder. Failure of the locking ring can lead to damage of the fertilizer distribution and/or transmission of the seeder.

FERTISYSTEM CONDUCTOR MAINTENANCE TUBE (FIGURES 59)

The **SPDE -A** seeder , when sold with the Fertisystem driver, comes with a maintenance tube (1) for maintenance or changing of the endless spring, without the need to remove the fertilizer from the tank

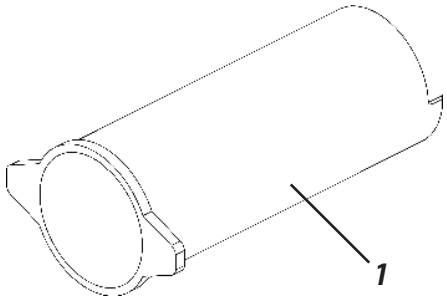

Maintenance Tube
Code: 60203900930

To service the fertisystem driver, proceed as follows:

1- Remove the discharge nozzle (2) from the fertisystem driver (3), releasing the quick release (4).

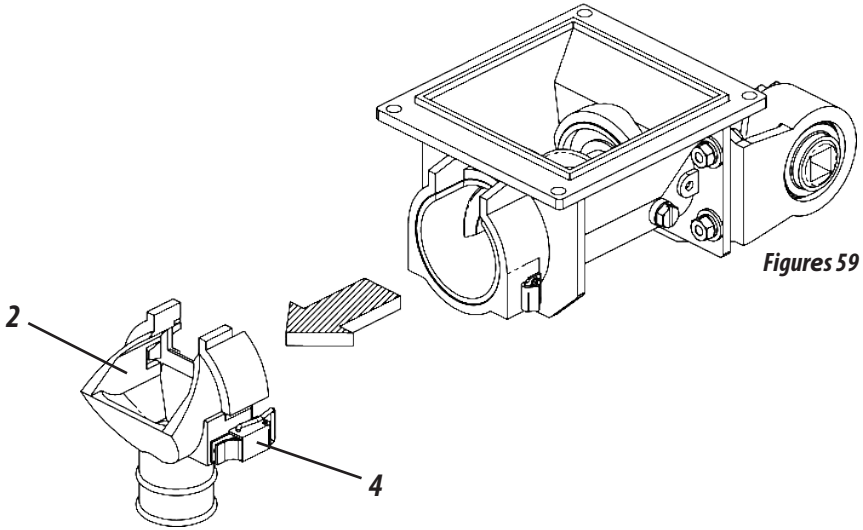

Figures 59

2- Then insert the maintenance tube (1) with rotating movements, promoting the movement of the fertilizer to the bottom of the doser. Then perform the necessary maintenance.

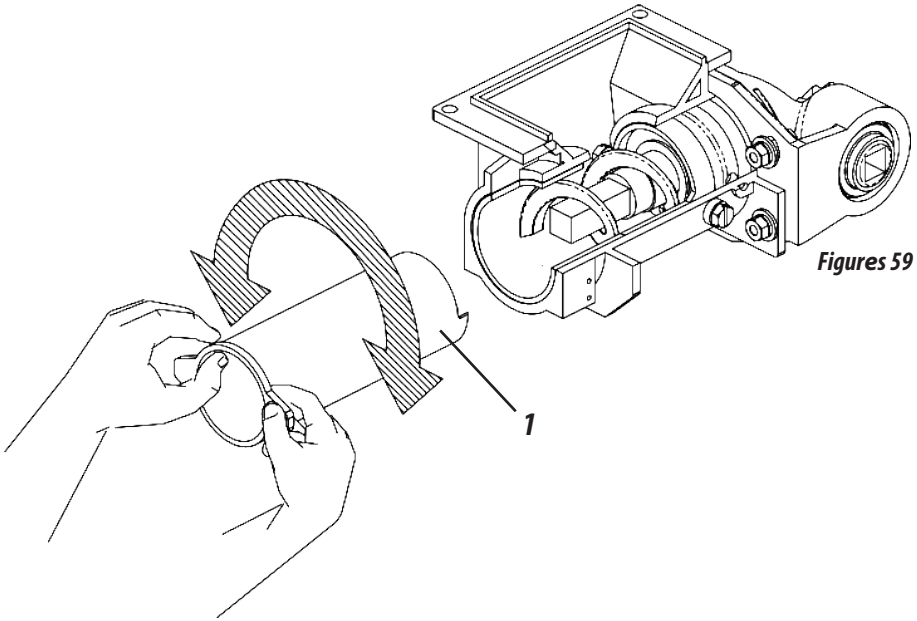

Figures 59

NOTE

The maintenance tube (1) has a cutting angle at the end to facilitate this operation.

MAINTENANCE

FERTISYSTEM CONDUCTOR BLOCKING TUBE (FIGURES 60)

The **SPDE -A** seeder , when sold with the Fertisystem driver accompanies a blocking tube for when you need to isolate some planting lines, so that distribution of the fertilizer does not happen.

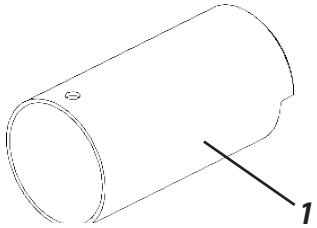

Blocker Tube
Code: 60203900913

Then, remove the endless spring (5) and the locking ring (6) from the Fertisystem (3).

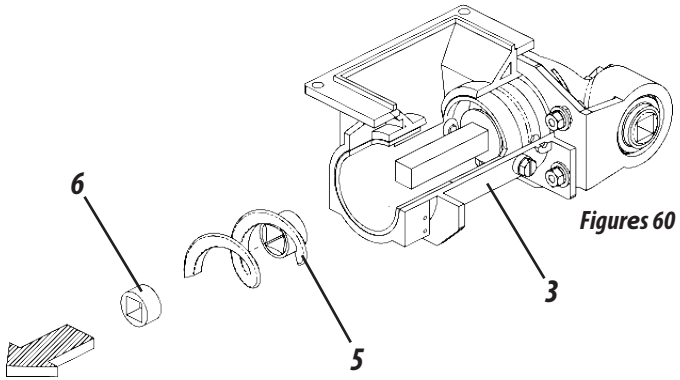

Figures 60

Then insert the release tube (1) and replace the discharge nozzle (2).

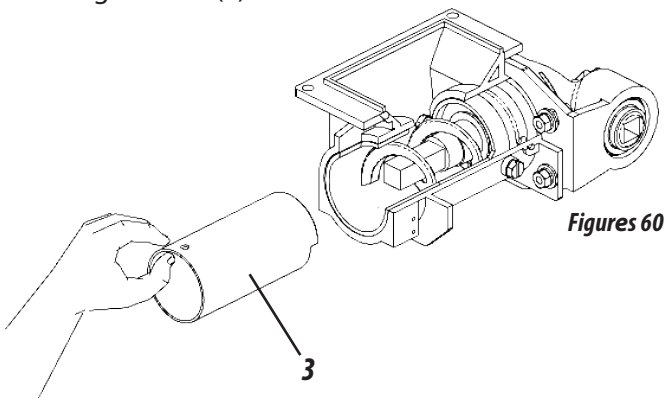

Figures 60

SPRING AND CAPS (OPTIONAL) FERTISYSTEM DRIVER (FIGURES 61)

The seeder **SPDE-A** leaves the factory assembled with an endless spring of pitch 2", but the seeder has a pitch 1" endless spring in its packaging. The seeder can also be supplied with 3/4" pitch endless spring **(optional).**

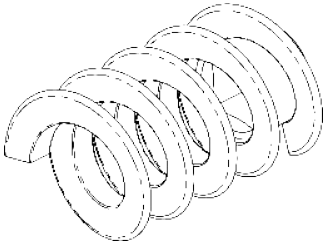

Endless Spring (Pitch 3/4")
Code: 60203700418

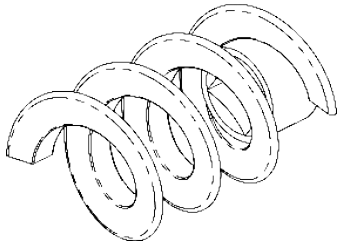

Endless Spring (Pitch 1"))
Code: 60203700426

Figures 60

The seeder **SPDE -A** leaves the factory with the transverse flow cap (**Standard)**, but the seeder can also be supplied with two other models of flow covers (**Optional**).

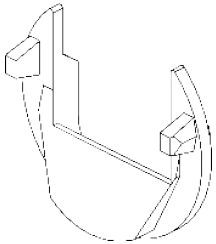

Fertipó Cover
Code: 60203900530

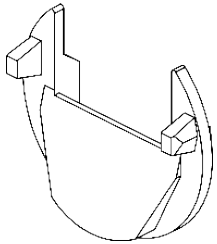

High Flow Cap
Code: 0203900522

Figures 61

OBSERVAÇÃO

Always fill the fertilizer tank at the work location.
Avoid any kind of impurity inside of the fertilizer tank.
Measure daily.

The **SPDE -A** seeder has options that can be purchased according to the need of work. Inside the options available are:

CPL IRON COMPACTOR WHEEL CART - OPTIONAL (FIGURES 62)

Item	Code	Description
01	51240105750	Heavy Iron Roller Cart Cpl Right
02	51240105768	Heavy Iron Roller Cart Cpl Left

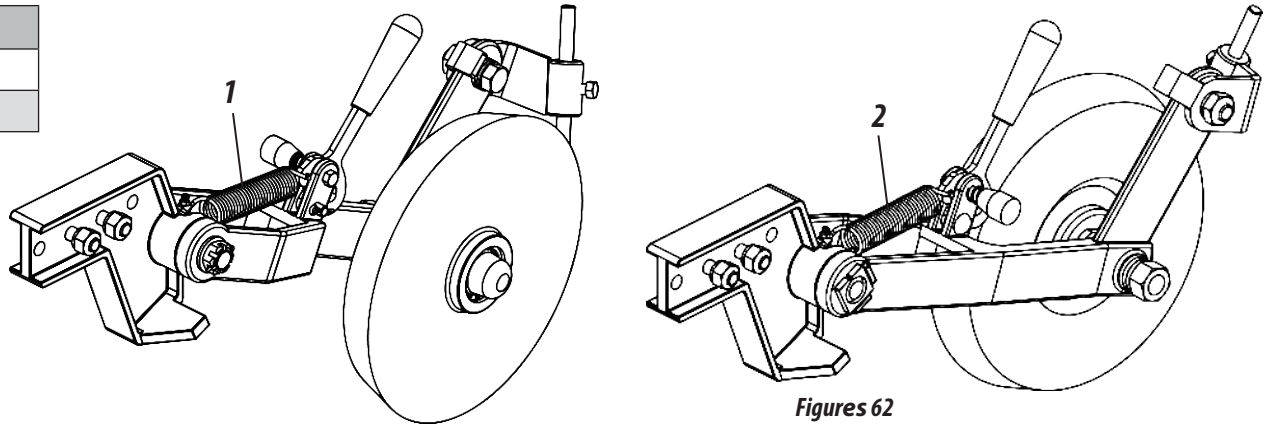

Figures 62

CPL COMPACTOR WHEELS - OPTIONAL (FIGURES 63)

Item	Code	Description
01	51240103781	Coller Cpl Concave Compactor Wheel
02	51240103790	Roller Cart Wheel Cpl Convex

Item	Code	Description
03	51240103803	Cpl Plain Roller Wheel Cart
04	51240103811	Roller Cart Wheel Cpl in "V"

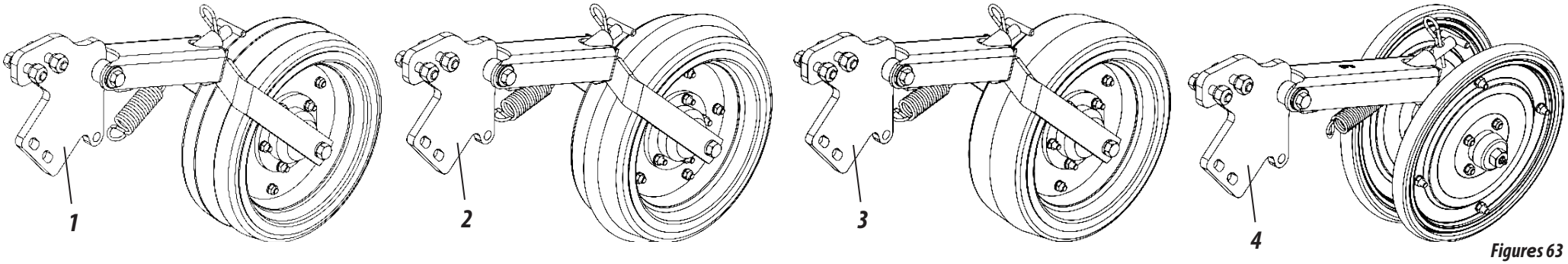

Figures 63

OPTIONALS

The **SPDE -A s**eeder has options that can be purchased according to the need of work. Inside the options available are:

LIMITING FLANGE w/ CLEANER - OPTIONAL (FIGURES 64)

Item	Code	Description
01	52880100564	Right Limiter Fitting (Depth 20mm)
02	52880100572	Left Limiting Finger (Depth 20mm)

Item	Code	Description
03	52880100548	Right Limiting Fitting (Depth 40mm)
04	52880100556	Left Limiting Fitting (Depth 40mm)

Item	Code	Description
05	52880100580	Right Limiting Fitting (Depth 55mm)
06	52880100599	Left Limiting Fitting (Depth 55mm)

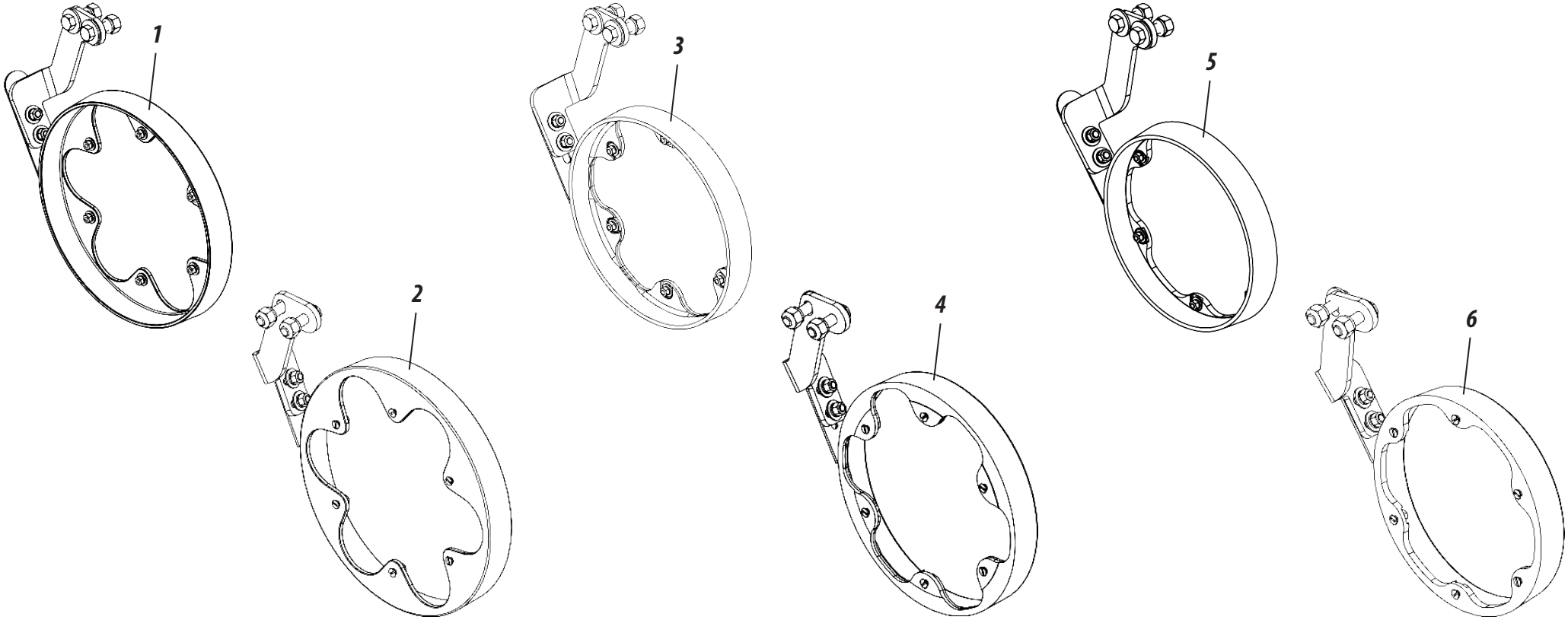

Figures 64

The **SPDE -A** seeder has options that can be purchased according to the need of work. Inside the options available are:

CPL DIGITAL HECTARE COUNTER OPTIONAL (FIGURE 65)

Code	Descriptio
51540100083	Digital Hectare Counter Cpl SPDE-A

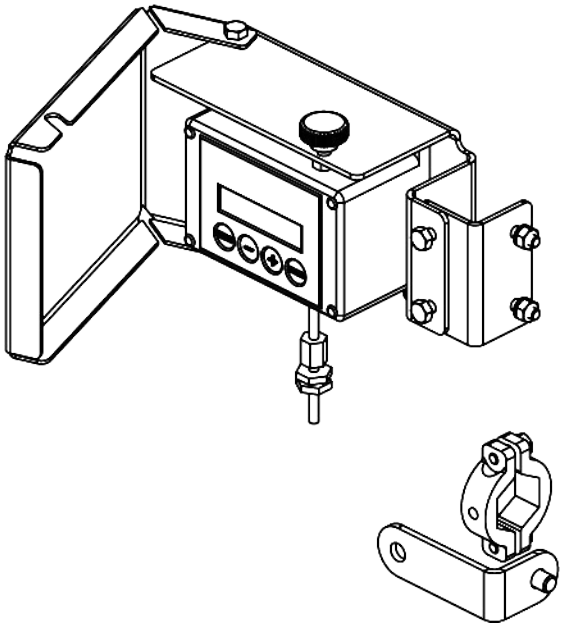

Figura 65

Data used to calculate the adjustment factor for the SPDE-A 7000 Hectometer
Number of Teeth of Wheel Gear = **13**
Number of Teeth of Sensor Gear = **14**
Tire Radius in meters (w / compaction losses) Tire 18.4.30 = **0.744**
Factor Adjustment (Admensional) = **0.801**

SIDE TRANSPORT KIT SEMI AUTOMATIC WHEEL SET OPTIONAL (FIGURE 66)

Code	Descriptio
KCJTRANLASPDEA	Semi-hydraulic Side Wheel Set for SPDE-A

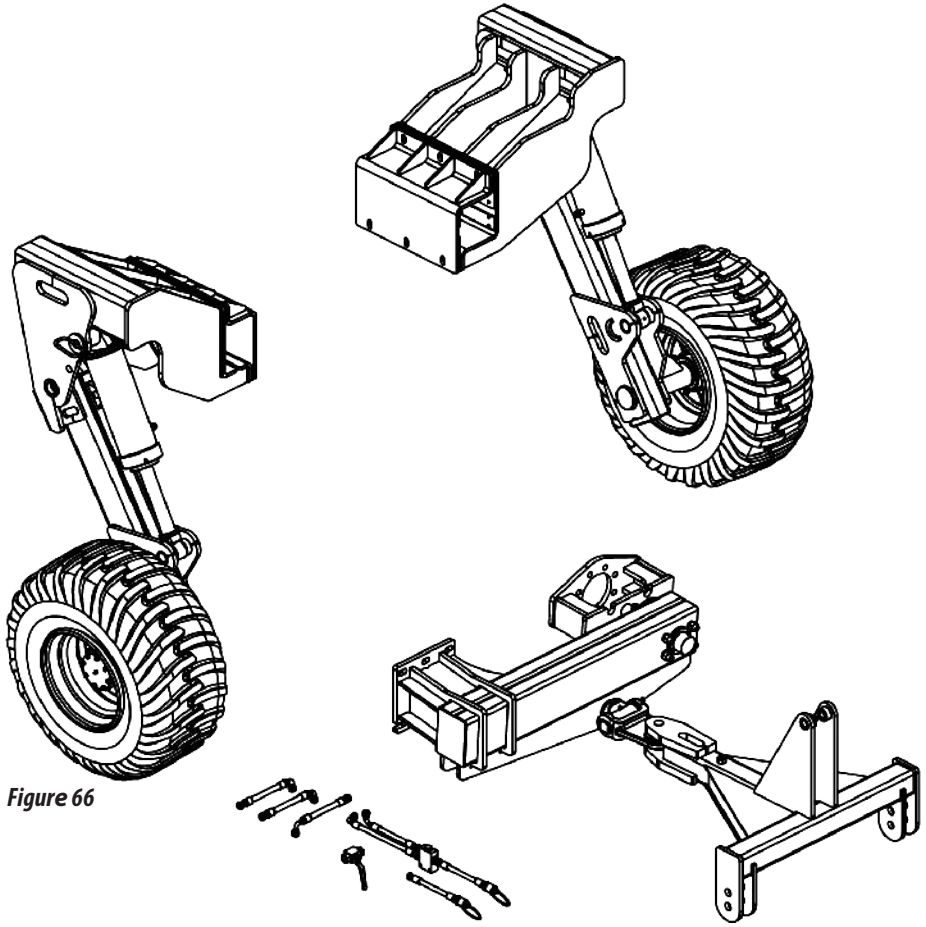

Figure 66

OPTIONALS

OPTIONALS

The **SPDE -A** seeder has options that can be purchased according to the need of work. Inside the options available are:

FINE CPL SEAL BOX - OPTIONAL (FIGURES 67)

Item	Code	Description
01	50920104247	Right Thin Seed Box for Plastic
02	50920104263	Left Thin Seed Box for Plastic

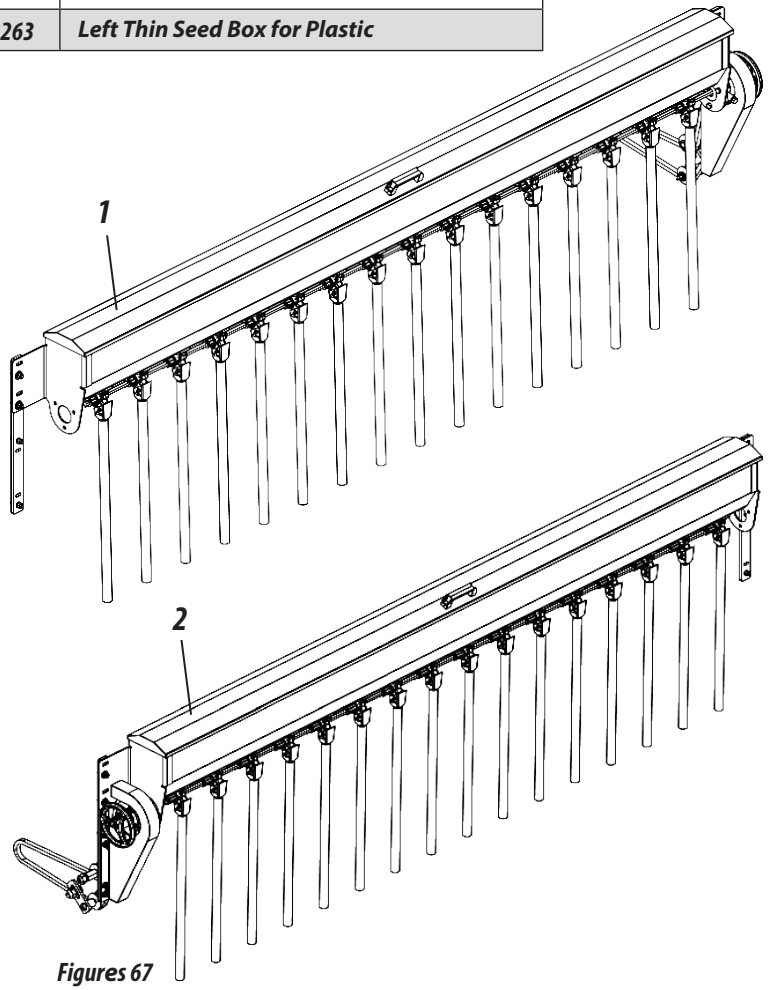

Figures 67

CPL LINE MARKER SYSTEM WITH STEERING (FIGURE 68)

Code	Description
55280106223	SPDE-A Line Marker System with steering

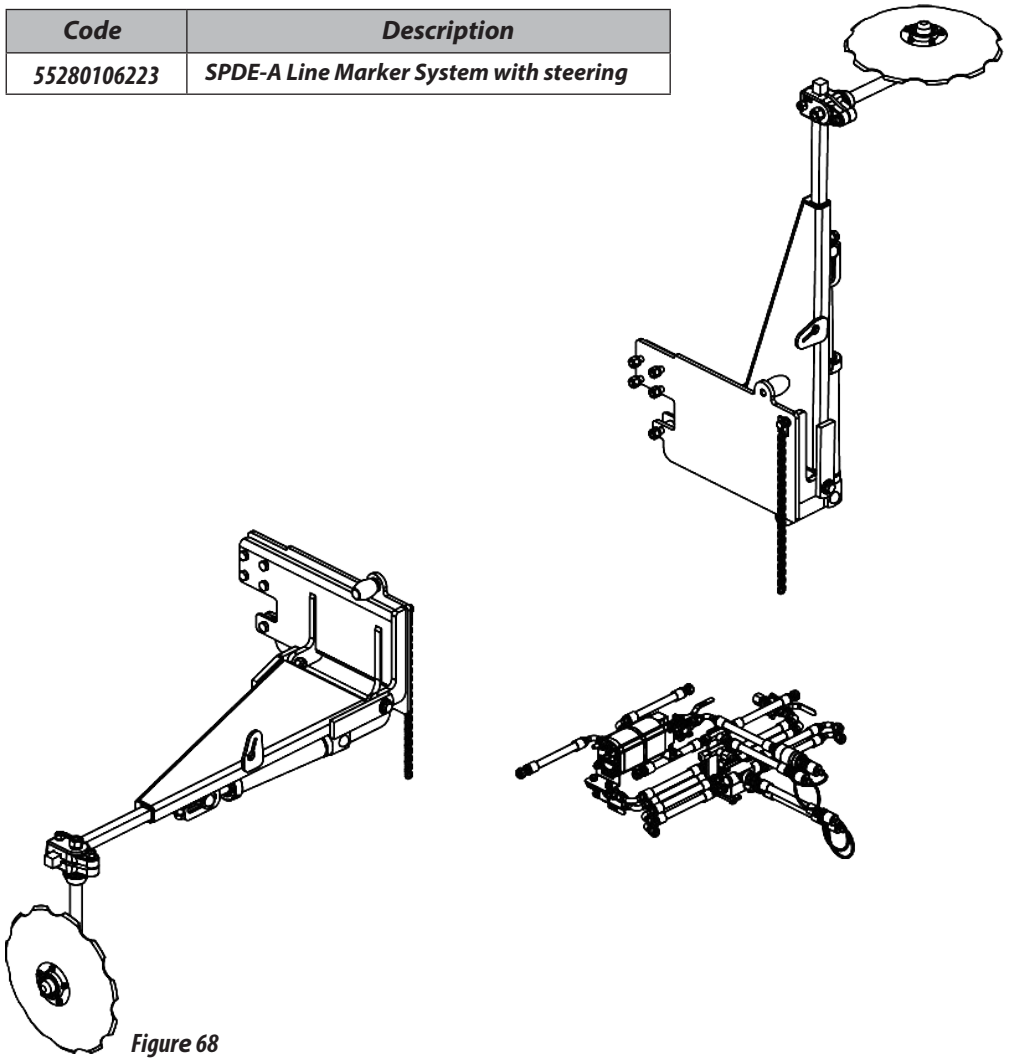

Figure 68

PRODUCT IDENTIFICATION (FIGURES 69)

1- In order to consult the parts catalog or to request technical assistance from Baldan, always identify the model (1), serial number (2) and date of manufacture (3), which is located on the identification label (4) of the seeder.

2- **ALWAYS DEMAND ORIGINAL BALDAN PARTS.**

Figures 69

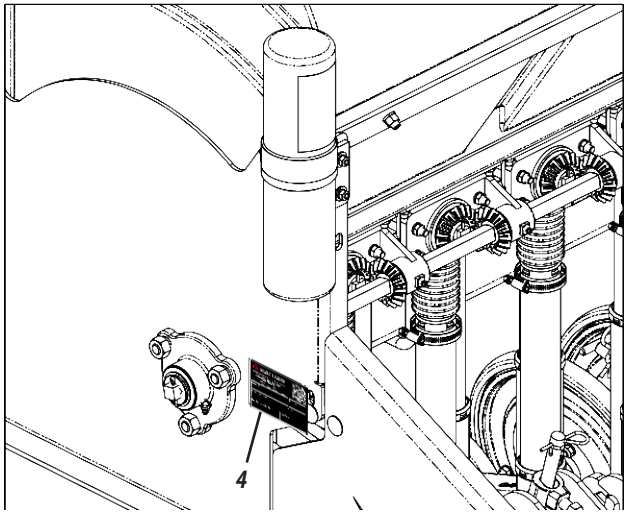

Make identification of the data below to always have accurate information about the life of your seeder.

Owner: _____

Reseller: _____

Farm: _____

City: _____ ***State:*** _____

No. of Certificate Warranty: _____

Model: _____

Serial No.: _____

Date of purchase: _____ ***Invoice. No.:*** _____

ATTENTION

The drawings in this manual are merely illustrative. To enable better vision and detailed instruction, some drawings in this manual, safety devices (covers, protections, etc.) have been removed. Never operate the seeder without these devices.

PUBLICATIONS

Code: 60550105236
CPT: SPDEA04721A

CONTACT

In case of doubt, consult the After Sales Service.
Phone: 0800-152577
Email: posvenda@baldan.com.br

NOTES

WARRANTY CERTIFICATE

BALDAN IMPLEMENTOS AGRÍCOLAS S/A, guarantees normal operation of the implement to the reseller for a period of 6 (six) months counted from the delivery date on the reseller's bill of sale to the first final consumer.

During this period **BALDAN** is committed to repair any defects in materials and/or manufacturing at its own responsibility, as labor, shipping, and other expenses are the responsibility of the reseller.

During the warranty period, the request and replacement of any defective parts will be done at the regional reseller, and thereafter ship the defective part to **BALDAN** for analysis.

When it is not possible to perform such procedure and the capacity for resolving the problem Is exhausted by the reseller, the same shall request support from the **BALDAN** Technical Support Service, by filling out the specific form distributed to resellers.

After analysis of the replaced items by the **BALDAN** Technical Support Services is concluded and the replacement is not covered by the warranty, then it will be the responsibility of the reseller to pay all the related costs for the replacement; as well as expenses on materials, travel, including lodging and meals, accessories, lubricates used, and other expenses originating from the Technical Support Service call, thereby the **BALDAN** company is authorized to charge for the respective bill to the reseller's name.

Any repair done on the product within the validity date of the warranty period, will only be authorized by **BALDAN** by previous presentation of the quotation describing the parts and labor charges that will be performed.

It is excluded from this agreement, whenever the product undergoes official repairs or modifications from service centers that do not belong to the **BALDAN** reseller network, as well as the installation of aftermarket parts or components in the user's product.

This warranty will be nullified if the defect or damage is the result from improper usage that is noncompliant to the instructions or inexperience of the operator.

It is agreed to that this present warranty does not cover tires, polyethylene storage compartments, drive shafts, hydraulic components, etc. as the warranty coverage is from their own manufacturers.

Manufacturing or material defects, as stated in the purpose of this warranty agreement, does not constitute, under any hypothesis, a reason for purchase and sale contract termination, or the payment of indemnities of any nature.

BALDAN reserves the right to change and or perfect the technical characteristics of its products, and without any obligation to proceed in previously manufactured products.

INSPECTION AND DELIVERY CERTIFICATE

- **SERVICE BEFORE DELIVERY:** This implement was carefully prepared by the sales organization; all it parts were inspected according to the instructions from the manufacturer.
- **DELIVERY SERVICE:** The user was informed as to the terms of the applicable warranty and instructed on its usage and maintenance procedures.
- I hereby confirm I have been informed on the terms of the applicable warranty and instructed on its usage and maintenance procedures of the implement.

Implement: _____

Serial Number: _____

Data: _____ *Invoice:* _____

Reseller: _____ *City:* _____

State: _____ *Postal Code:* _____

Owner: _____ *Phone:* _____

Address: _____ *Number:* _____

City: _____ *State:* _____

E-mail: _____

Sales Date: _____

Signature / Reseller Stamp _____

1ª - Owner

CERTIFICATE

CERTIFICATE

INSPECTION AND DELIVERY CERTIFICATE

- **SERVICE BEFORE DELIVERY:** This implement was carefully prepared by the sales organization; all it parts were inspected according to the instructions from the manufacturer.
- **DELIVERY SERVICE:** The user was informed as to the terms of the applicable warranty and instructed on its usage and maintenance procedures.
- I hereby confirm I have been informed on the terms of the applicable warranty and instructed on its usage and maintenance procedures of the implement.

Implement: _____

Serial Number: _____

Data: _____ *Invoice:* _____

Reseller: _____ *City:* _____

State: _____ *Postal Code:* _____

Owner: _____ *Phone:* _____

Address: _____ *Number:* _____

City: _____ *State:* _____

E-mail: _____

Sales Date: _____

Signature / Reseller Stamp _____

2ª - Reseller

INSPECTION AND DELIVERY CERTIFICATE

- **SERVICE BEFORE DELIVERY:** This implement was carefully prepared by the sales organization; all it parts were inspected according to the instructions from the manufacturer.
- **DELIVERY SERVICE:** The user was informed as to the terms of the applicable warranty and instructed on its usage and maintenance procedures.
- I hereby confirm I have been informed on the terms of the applicable warranty and instructed on its usage and maintenance procedures of the implement.

Implement: _____

Serial Number: _____

Data: _____ *Invoice:* _____

Reseller: _____ *City:* _____

State: _____ *Postal Code:* _____

Owner: _____ *Phone:* _____

Address: _____ *Number:* _____

City: _____ *State:* _____

E-mail: _____

Sales Date: _____

Signature / Reseller Stamp _____

3ª - Manufacturer

Please send a filled out copy in a maximum period of 15 days to BALDAN.

BALDAN

Avenida Baldan, 1500
Nova Matão
15.993-900
Matão/SP - Brasil
sac@baldan.com.br
export@baldan.com.br

+55 16 3221 6500
baldan.com.br