Instruction
Manual

TOPOGRAFIC 4500 to 9500

Precision Row Crop Planter

BALDAN

PRESENTATION

We appreciate the preference and would like to congratulate you for the excellent choice you just made, since you have acquired a product manufactured with **BALDAN IMPLEMENTOS AGRÍCOLAS S/A** technology.

This manual will guide you through the procedures required since its acquisition until operational procedures of usage, safety and maintenance.

BALDAN assures that it has delivered this implement for resale in full and in perfect conditions.

Resale was responsible for the custody and maintenance during the period in its possession, and also for the assembly, retightening, lubrication and overhaul.

During the technical delivery, dealer should guide the user regarding maintenance, safety, their obligations in eventual technical assistance, strict compliance with the warranty term and reading the instructions manual.

Any technical assistance request while in warranty should be made to the dealer from whom you have purchased it.

We reiterate the need for a careful read of the warranty certificate and compliance of all items from this manual, because by doing so you will increase the life of your device.

Instruction
Manual

TOPOGRAFIC 4500 to 9500

Precision Row Crop Planter

BALDAN IMPLEMENTOS AGRÍCOLAS S/A.
CNPJ: 52.311.347/0009-06
Insc. Est.: 441.016.953.110

Scan the QR Code on the identification plate of your device and access this Instruction Manual online.

BALDAN

INDEX

WARRANTY **8**
Baldan warranty *8*
GENERAL INFORMATION **9**
To the owner *9*
SAFETY RULES ..... **10 - 13**
WARNINGS **14**
COMPONENTS **15**
TECHNICAL SPECIFICATIONS **16**
ASSEMBLY **17**
Coupler head assembly *17*
Compactor wheel assembly *18*
Row assembly *18*
Seed conductor hose assembly *19*
Hydraulic system assembly without row marker Sp Topografic 4500 to 8500 ..... *20*
Hydraulic system assembly with row marker Sp Topografic 4500 to 7500 ..... *21*
Hydraulic system assembly with row marker Sp Topografic 8500 ..... *22*
Hydraulic system assembly without row marker Sp Topografic 9500 ..... *23*
Hydraulic system assembly with row marker Sp Topografic 9500 ..... *24*
Cutting disc assembly and row marker *25*
ERGONOMICS **26**
System for lifting and lowering the coupling head *26*
COUPLING **27**
Coupling to the tractor *27*
Leveling *28*
TRANSPORT **29**
Procedure for transport *29*
OPERATING **30**
Procedure for operating ..... *30 - 31*
Ladder use *31*
TRANSPORT / OPERATING **32**
Frame fastening plates *32*
SPACING **33**
Spacing between rows *33*
Even number of rows *33*
Odd number of rows *33*
Milimiter spacing table (Table 02) *34*
OPERATING PREPARATIONS **35**
Skidding index *35*
ADJUSTMENTS **36**
Row marker adjustment *36*
Adjusting the row marker discs *37*
Adjusting the row maker bar *37*
Ratchet adjustment *38*
Adjustment of the side limiting depth wheel *38*
SEED SPREADING SYSTEM **39**
Chossing the appropriate disc *39*
Changing the seed discs ..... *39 - 40*
Seed dispenser rosette *41*

Changing double rosettes to a single 41
Seed spreading discs and rings (Tables 03/04/05) 42
Using powdered graphite or industrial talcum powder (Table 06) 43
Speed Box 43
Seed spreading adjustment 44
Seed spreading table (Tables 07/08) ..... 45 - 46
FERTILIZER SPREADING SYSTEM **47**
Fertilizer conductor - Fertisytem 47
Speed Box 48
Adjustments for spreading fertilizer 48
Fertilizer spreading table (Tables 09/10) ..... 49 - 50
CALCULATION **51**
Pratical calculation for spreading fertilizer 51
Pratical test for measuring the quantify for spreading fertilizer and seeds 51
SYSTEM **52**
Finishing system w/electric activator (Tables 11/12) 52
SYSTEM / STORAGE COMPARTMENT **53**
Sistema de Eixos de Transmissão Adubo e Semente 53
Non-potable water storage compartment 53
SEED ROWS **54**
Rows models - Standard 54
Optional row models ..... 54 - 58
ROW ADJUSTMENTS **59**
Cutting disc depth adjustment 59
Cutting diss pressure adjustment 59
Spring pressure adjustment ..... 60 - 61
Double disc cleaner adjustment 62
Oscillating wheel depth adjustment 62
Depth limiting wheel ..... 63 - 64
Oscillating wheel depth adjustment 64
Oscillating depth wheel opening adjustment 65
Adjustment of the anchor's attachment angle (Pivoted System) - Optional 66
Regulation of the furrower for automatic disarm - Optional 66
Regulation of the furrower reset load - Optional 66
Fertilizer depth and pressure in the seed rows (Pivoted System) - Optional 67
Adjusting the furrow tine for increased or decreased mismatching (Pivoted System) - Optional 67
OPERATING **68**
Operating recommendations 68
MAINTENANCE **69**
Tire pressure 69
Lubrification 69
Grease and equivalent table (Table 13) 69
Lubrificate after every 10 hours of operation ..... 70 - 71
Lubrificate after every 30 hours of operation 72
Lubrificate after every 60 hours of operation 72
Lubrificate after every 200 hours of operation 73
Chain stretcher 73
Oscillating stretcher 73
Exchange or maintenance of the cardan on the line 74

INDEX

INDEX

Opertating maintenance *75*
Care *75*
Overall cleaning *76*
Seed conservation - Part I *76*
Seed conservation - Part II *77*
Titanium dispenser - Optional *78*
Changing the poliflows in the titanium dispenser - Optional *78*
Changing the escovaflex in the titanium dispenser - Optional *79*
Changing the bounce protector in the Titanium dispenser - Optional *79*
Changing the discs and rings in the Titanium dispenser - Optional *80*
Precautions in closing the titanium dispenser - Optional *80*
Chacing rings before every new planting season Titanium dispenser - Optional *81*
Cleaning the Titanium dispenser - Optional *81*
Cleaning the Fertisystem conductor *82*
Maintenance tube for the Fertisytem conductor *83*
Blocker tube for Fertisystem conductor *84*
Spring and covers (optionals) conductor Fertisystem *84*
Changing tires *85*
OPTIONAL **86**
Hydraulic system without / row marker (Table 14) *86*
Hydraulic system with / row marker (Table 15) *86*
ETD system (Electronic dosing table) *87*
ETD MANUAL **88**
Presentation *88*
Mounting the magnets on the mains axis *89*
Mounting the speed sensor *89*
Speed sensor instalation *90*
Identification *90*
Settings menu *91*
Sensor calibration *91*
Machine *92*
Sensor calibration *92*
Seed rate ..... *93 - 95*
Fertilizer rate *96*
Total calculation *96*
Calibrate fertilizer ..... *97 - 98*
F3 Hour meter *98*
F4 Hectometer *99*
Settings menu ..... *99 - 100*
Sensor calibration *100*
Machine *101*
Time above maximum speed *102*
IDENTIFICATION **103**
Product identification *103*
NOTES ..... **104 - 105**
CERTIFICATE **106**
Certificate of warranty ..... *106 - 108*

BALDAN WARRANTY

BALDAN IMPLEMENTOS AGRÍCOLAS S/A ensures the dealer normal performance of the implement for a period of six (6) months as of the delivery date on the retail invoice to the first final consumer.

During this period, **BALDAN** undertakes to repair defects in material and/or of manufacture of its liability, including labor, freight and other expenses of the dealer's liability.

In the warranty period, request and replacement of eventual defective parts shall be made to the dealer of the area, who will submit the faulty piece to **BALDAN** analysis.

When this procedure is not possible and the resolving capacity of the dealer is exhausted, the dealer will request the support of **BALDAN** Technical Assistance through a specific form distributed to dealers.

After analyzing the replaced items by **BALDAN** Technical Assistance, and concluding that it is not a warranty, then the dealer will be responsible for the costs related to the replacement; as well as material expenses, travel including accommodation and meals, accessories, lubricant used and other expenses arising from the call out to Technical Assistance, and **BALDAN** company is authorized to carry the respective invoice in the name of the resale.

Any repairment carried in the product within the dealer warranty deadline will only be authorized by **BALDAN** upon previous budget presentation describing parts and workforce to be executed.

The product is excluded from this term if it is repaired or modified by representatives not belonging to the **BALDAN** dealer network, as well as the application of non-genuine parts or components to the user's product.

This warranty is void where it is found that the defect or damage is caused by improper use of the product, failure to follow instructions or inexperience of the operator.

It is agreed that this warranty does not cover tires, polyethylene tanks, cardan, hydraulic components, etc., which are equipment guaranteed by their manufacturers.

Manufacturing and/or material defects, object of this warranty term, will not constitute, under any circumstances, grounds for termination of a purchase agreement, or for indemnification of any nature.

BALDAN reserves the right to change and/or perfect the technical characteristics of its products, without previous notice, and without obligation to proceed in the same way with the products previously manufactured.

GENERAL INFORMATION

TO THE OWNER

BALDAN IMPLEMENTOS AGRÍCOLAS S/A is not responsible for any damaged caused by accident due to usage, transportation, or in the improper or incorrect transportation of its implement, whether by negligence and/or inexperience of any person.

Only people with complete knowledge of the tractor and the implement should carry their transportation and operation.

BALDAN is not responsible for any damaged caused in unpredictable or unrelated situations to the normal use of the implement.

The incorrect handling of this equipment may result in severe or fatal accidents. Before running the equipment, carefully read the instructions contained in this manual. Make sure that the person responsible for the operation is instructed as the correct and safe handling. Also make sure that the operator has read and understood the instructions manual of the product.

NR-31 - SAFETY AND HEALTH AT WORK IN AGRICULTURE, LIVESTOCK FORESTRY, FOREST EXPLORATION AND AQUACULTURE.

This Regulatory Standard has the purpose of establishing precepts to be observed in the organization and work environment, compatible to the planning and development of agriculture, livestock, forestry, forest exploitation and aquaculture with safety and health and work environment.

MR. OWNER OR OPERATOR OF THE EQUIPMENT.
Read and carefully comply with provisions of NR-31.

For more information, refer to the site and read NR-31 in full.
http://portal.mte.gov.br/legislacao/normas-regulamentadoras-1.htm

THIS SYMBOL INDICATES IMPORTANTE SAFETY WARNING. IN THIS MANUAL, WHENEVER YOU FIND IT, READ THE FOLLOWING MESSAGE CAREFULLY AND PAY ATTENTION TO THE POSSIBILITY OF PERSONAL ACCIDENTS.

ATTENTION

• Carefully read the instructions manual tolearn about the re-commended safety practices.

ATTENTION

• Only start to operate the tractor when you are properly seated and with the seat belt locked.

ATTENTION

• Do not work with the tractor if the front has insufficient ballast to the rear equipment. Should there be a trend to lift, add weights or ballasts to the front or the front wheels.

ATTENTION

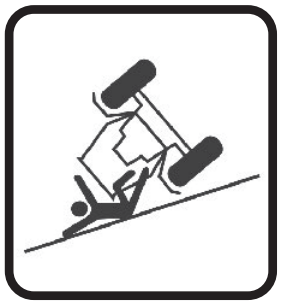

• There are risks of severe injuries due to tipping when working in sloped terrains.

• Do not over speed.

ATTENTION

• Do not transport people on the tractor or over the equipment.

ATTENTION

• Before performing any maintenance in your equipment, make sure it is properly stopped. Avoid being run over.

SAFETY RULES

SAFETY RULES

⚠ ATTENTION

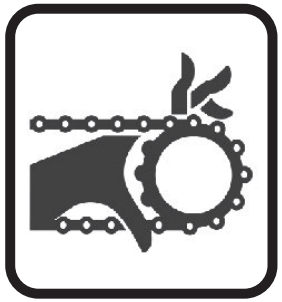

- Do not operate theseeder if thetransmission guards are not properly attached.
- Only remove protections to proceed with gear replacement, put them back immediately.
- Do not make adjustments with the seeder in motion.

⚠ ATTENTION

- Pressurized hydraulic oil under may cause serious injury if leaks occur. Periodically check the condition of the hoses. If there is evidence of leaks, replace them immediately.
- Before connecting or disconnecting hydraulic hoses, relieve system pressure by activating the control with thetractor off.

⚠ ATTENTION

- Always stay away from the active elements of the seeder (discs) they are sharp and cause accidents.
- When servicing discs, wear safety gloves in your hands.

⚠ ATTENTION

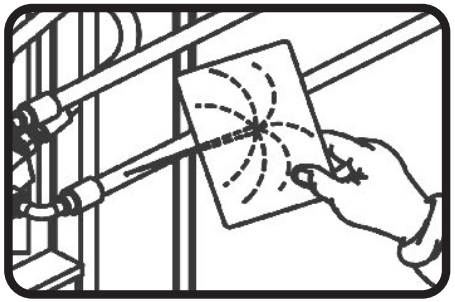

- When checking hoses for leaks, use a piece of cardboard or wood, never use your hands.
- Avoid incision of fluid in the skin.

⚠ *THIS SYMBOL INDICATES IMPORTANTE SAFETY WARNING. IN THIS MANUAL, WHENEVER YOU FIND IT, READ THE FOLLOWING MESSAGE CAREFULLY AND PAY ATTENTION TO THE POSSIBILITY OF PERSONAL ACCIDENTS.*

ATTENTION

- When operating the seeder, do not allow people to stand on the machine.
- Do not stand on the platforms with the seeder in motion.

ATTENTION

- Do not drink water from the storage compartment, as it is improper for human consumption "Non-potable Water!"
- Ignoring this warning can cause risks to one's health.

ATTENTION

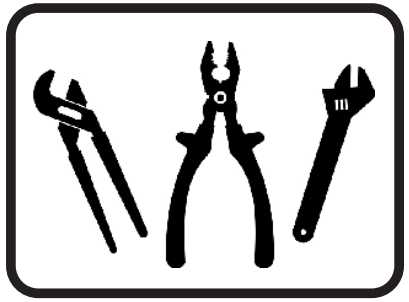

- Do not perform adjustments while the seeder in operation.
- When performing any service on the seeder, switch off the tractor first. Use appropriate tools.

THIS SYMBOL INDICATES IMPORTANTE SAFETY WARNING. IN THIS MANUAL, WHENEVER YOU FIND IT, READ THE FOLLOWING MESSAGE CAREFULLY AND PAY ATTENTION TO THE POSSIBILITY OF PERSONAL ACCIDENTS.

ATTENTION

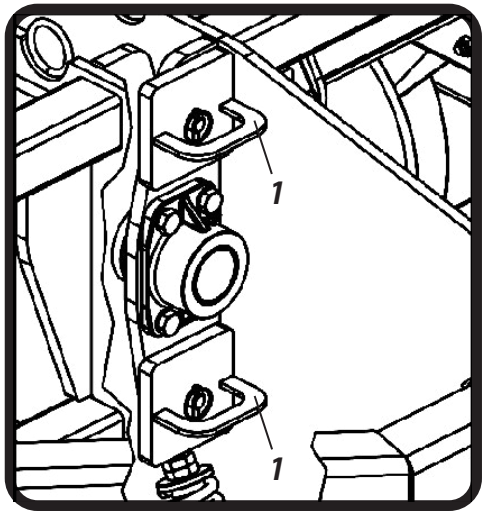

- Use the fastening plates (1) on the frames when hoisting the seeder.
- Ignoring this warning can cause serious accidents or damages to the seeder.

SEE PAGE 32.

SAFETY RULES

SAFETY RULES

ATTENTION

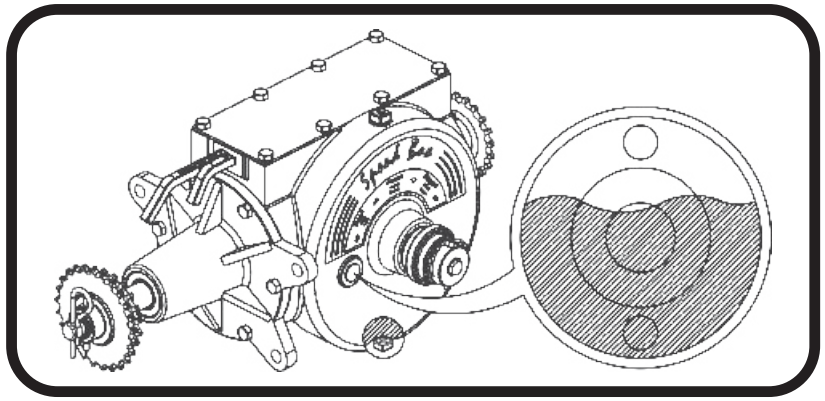

- Check the oil level daily.
- Change the Speed Box oil after the first 30 hours of work, then every 1500 hours, always using ISO VG 150 mineral oil at 40°C (amount of oil used 1.8 liters).
- Use only the original fuse from the factory, as only this one has a controlled hardness.

ATTENTION

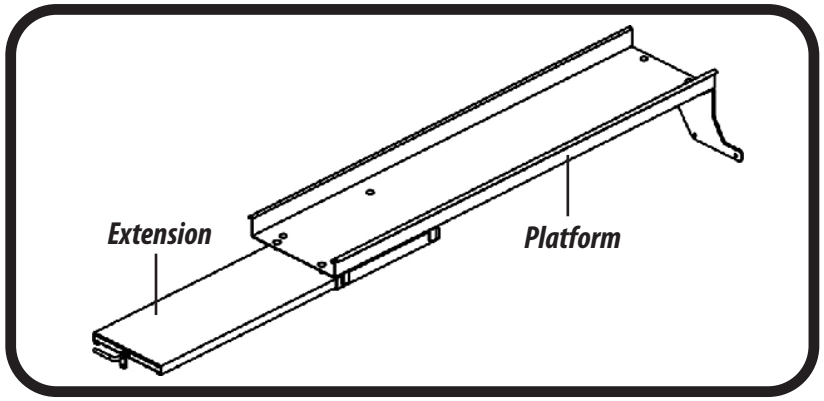

- Utilize the platform extension only after providing support for the loading trailer.
- Ignoring this warning can cause damages to the seeder, serious accidents, or even death.

THIS SYMBOL INDICATES IMPORTANTE SAFETY WARNING. IN THIS MANUAL, WHENEVER YOU FIND IT, READ THE FOLLOWING MESSAGE CAREFULLY AND PAY ATTENTION TO THE POSSIBILITY OF PERSONAL ACCIDENTS.

01 - Do not let people stay too close or on it, when operating the equipment.

02 - Whenever performing any assembly and disassembly work on the discs, wear safety gloves on your hands.

03 - Do not wear loose clothing, and it can get stuck in the equipment.

04 - The operator must be sitting in the operator's seat and be completely aware of correct handling and safety for the tractor as well as the implement, when operating the tractor engine. Always place the gear shift in the neutral position, turn off the power take-off and place the hydraulic controls in the neutral position.

05 - Do not turn on the engine in a closed place or without proper ventilation, as the gases from the exhaust are harmful to health.

06 - When maneuvering the tractor towards the implement coupler, certify there is enough space and no people are nearby. Always maneuver at a reduced speed and be prepared to brake if there is any emergency.

07 - Do not make any adjustments when the implement is operating.

08 - When working on sloped terrains, proceed with caution, and always maintain necessary stability. In case, there is any loss of balance, reduce acceleration and turn the tractor wheels towards the sloped side of the terrain.

09 - Drive the tractor at compatible safe speeds, especially on uphill or downhill slopes. Always keep the tractor engaged.

10 - When driving the tractor on highways, keep the brake pedals interconnected and utilize safety signalization.

11 - Do not operate the tractor if the front is light. If there is any tendency for the front to lift, add weights to the front or front wheels.

12 - When leaving the tractor, engage the gearshift in neutral and press the parking brake.

13 - Drinking alcoholic beverages or some medications can cause decreased reflexes and modify the physical condition of the operator. For this reason, never operate the equipment, under the influence of these substances.

14 - Read or explain the above procedures to any user who is illiterate.

In case of doubts/questions, consult with the After Sales department.
Telephone: 0800-152577 / E-mail: posvenda@baldan.com.br

WARNINGS

COMPONENTS

SP TOPOGRAFIC
PRECISION ROW CROP PLANTER

1 - Central frame
2 - Left side frame
3 - Right side frame
4 - Cutting disc
5 - Speed Box
6 - Non-potable water storage compartment
7 - Shackle
8 - Coupling head
9 - Regulator
10 - Main valve
11 - Tool box
12 - Support foot
13 - Depth limiting wheel for side frames
14 - Marker cylinder
15 - Fertilizer double disc
16 - Tire
17 - Ladder
18 - Seed double disc
19 - Depth limiting wheel
20 - "V" Wheel
21 - Platform
22 - Seed Storage Compartment
23 - Platform Handrail
24 - Fertilizer Storage Compartment
25 - Marker Disc
26 - Marker

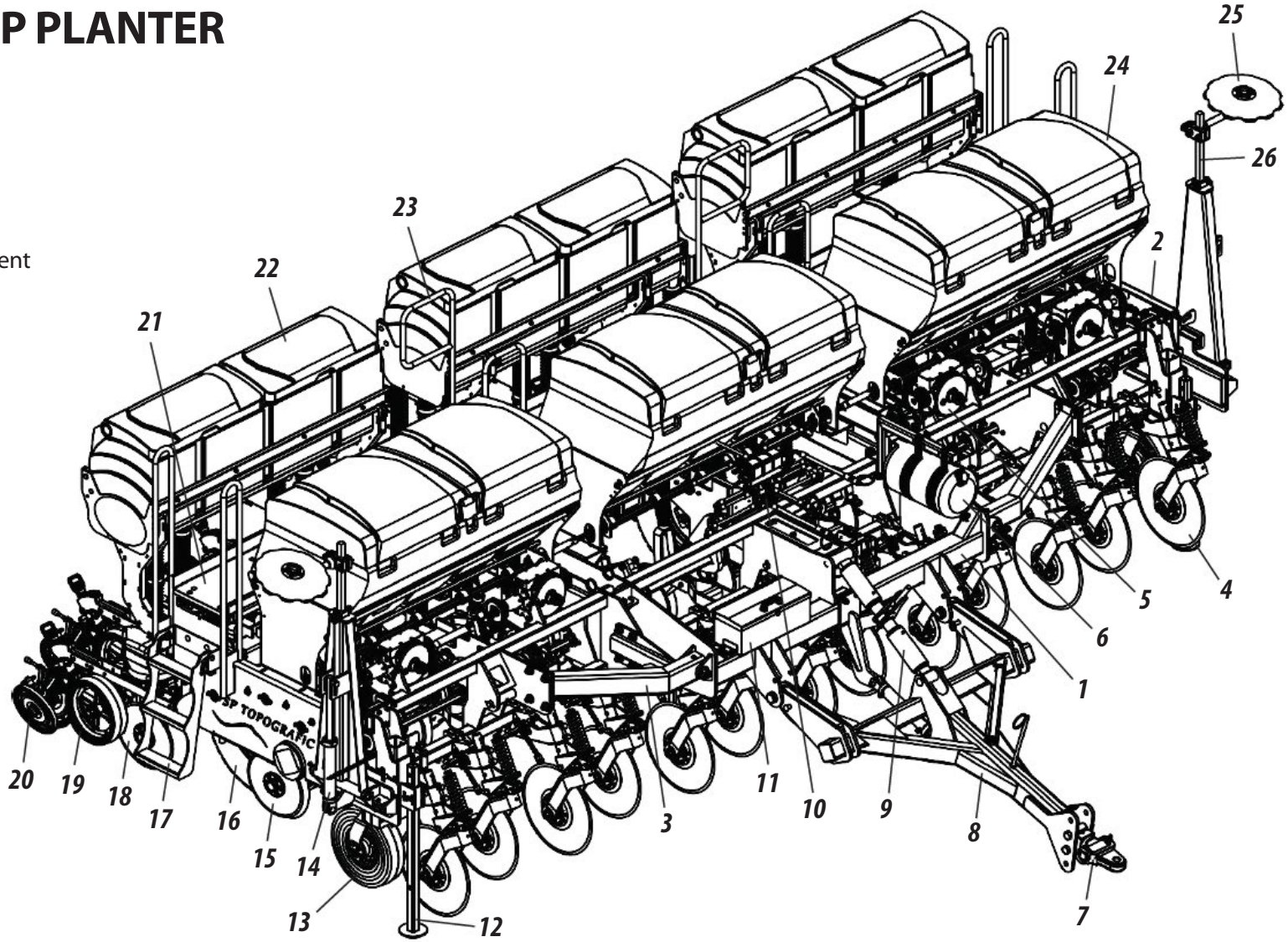

Table 01

Model	Nr of Rows	Useful Width (mm)	Total Width (mm)	Operating Width (mm)	Fertilizer Storage Capacity (L)	Seed Storage Capacity (L)	Number of Wheels (unit)	Approximate Weight (kg)	Approximate Power (Hp)
SP TOPOGRAFIC 4500	11	4500	5300	4950	1650	715	4	5700	105 - 130*
SP TOPOGRAFIC 5500	13	5400	6400	5850	1860	845	6	7745	130 - 150*
SP TOPOGRAFIC 6500	15	6300	7100	6750	2160	975	6	7900	145 - 180*
SP TOPOGRAFIC 7500	17	7200	8400	7650	2610	1105	8	9000	160 - 190*
SP TOPOGRAFIC 8500	19	8100	8900	8550	2920	1235	8	9400	175 - 220*
SP TOPOGRAFIC 9500	21	9000	9800	9450	3240	1365	8	10000	190 - 240*

Tires (mm) 700x16
Space between rows (mm) 450
Transport width (mm) 6500

(*) Approximate power (hp) depends on standard situations for planting, which can depend on variations according to the type of soil, topography, etc.

Baldan reserves the right to change and or improve the technical characteristics of its products without prior notice and without obligation to do so with previously manufactured products. Technical specifications are estimates and reported under normal working conditions.

TECHNICAL SPECIFICATIONS

ASSEMBLY

The **SP TOPOGRAFIC** is shipped from the factory semi-assembled, as just some components need to be assembled as explained below:

COUPLER HEAD ASSEMBLY

Proceed as follows to assemble the **SP TOPOGRAFIC** seeder (1) coupler head:

1- Couple the coupler head (1) to the chassis (2), fastening it using the pins (3) and ring latch (4).

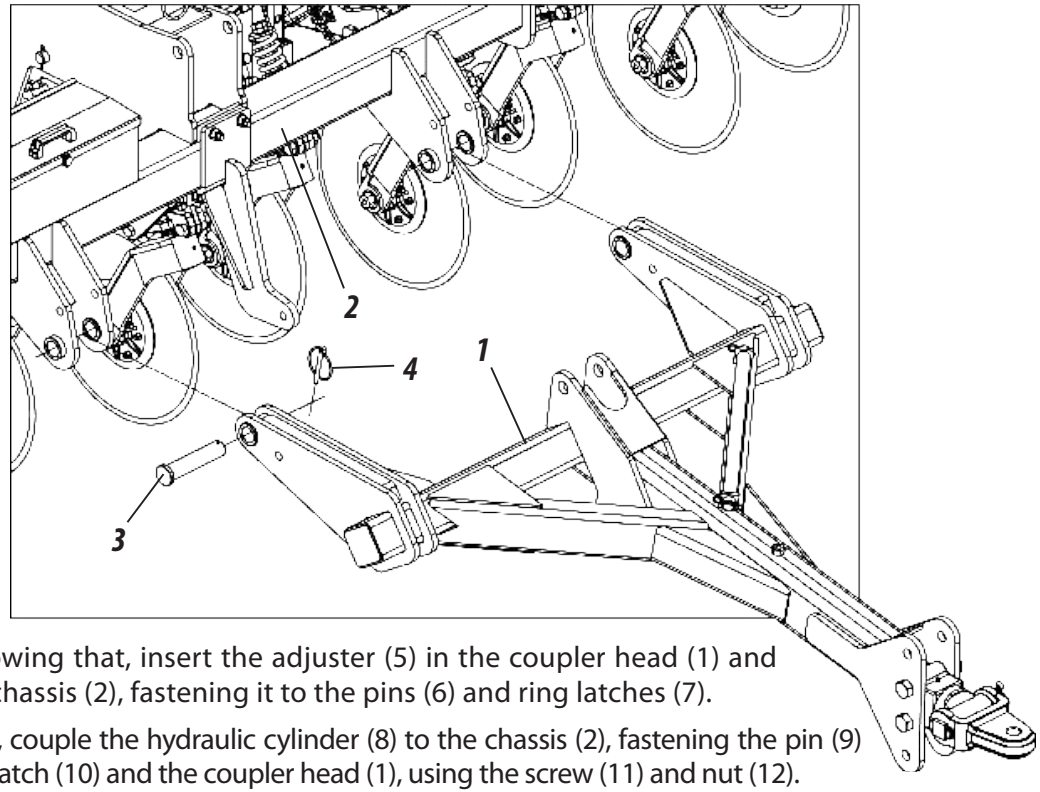

2- Following that, insert the adjuster (5) in the coupler head (1) and the chassis (2), fastening it to the pins (6) and ring latches (7).

3- After, couple the hydraulic cylinder (8) to the chassis (2), fastening the pin (9) and latch (10) and the coupler head (1), using the screw (11) and nut (12).

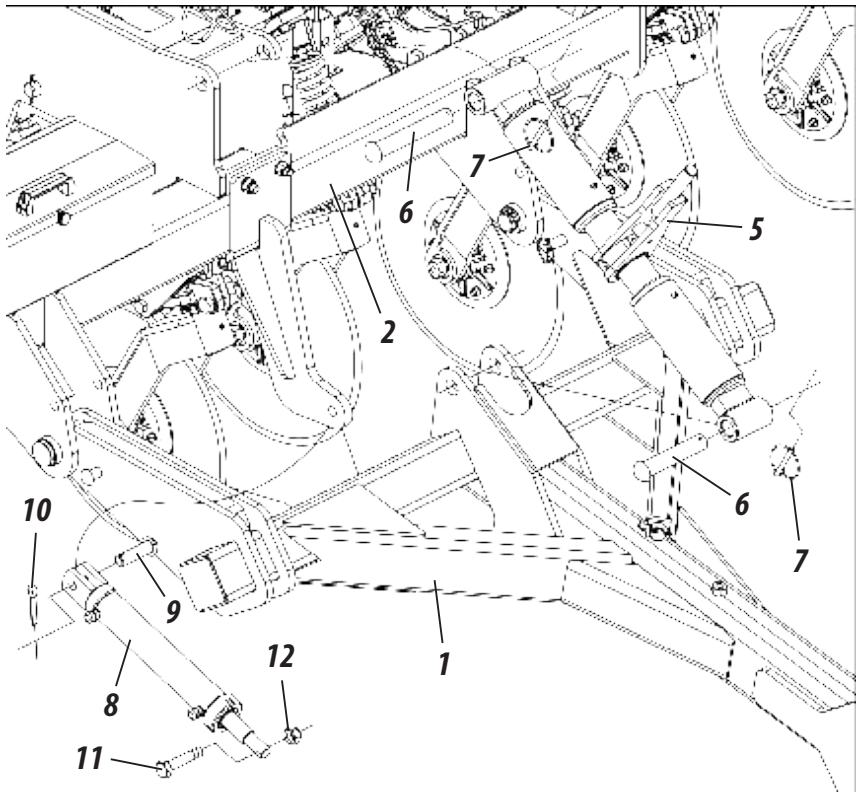

IMPORTANT

Before starting to assemble the coupler head (1), look for an ideal location to facilitate the identification of components and the assembly of the coupler head.

ATTENTION ***Only couple the hoses and the quick couplers to the hydraulic cylinder (8) when articulating the coupler head (1). Before articulating the coupler head (1), remove the adjuster (5). Ignoring this warning can cause damages, serious accidents, or even death.***

COMPACTOR WHEEL ASSEMBLY

Assemble the "V" wheel support (1) proceed in the following manner:

1- Couple the "V" wheel support (1) in the same path as the depth wheel (2), placing the bushings (3), fastening them using the screw (4), lock washer (5) and nut (6).

2- Then, place the lever (7) totally forwards and engage the wheel (8) in the support (2).

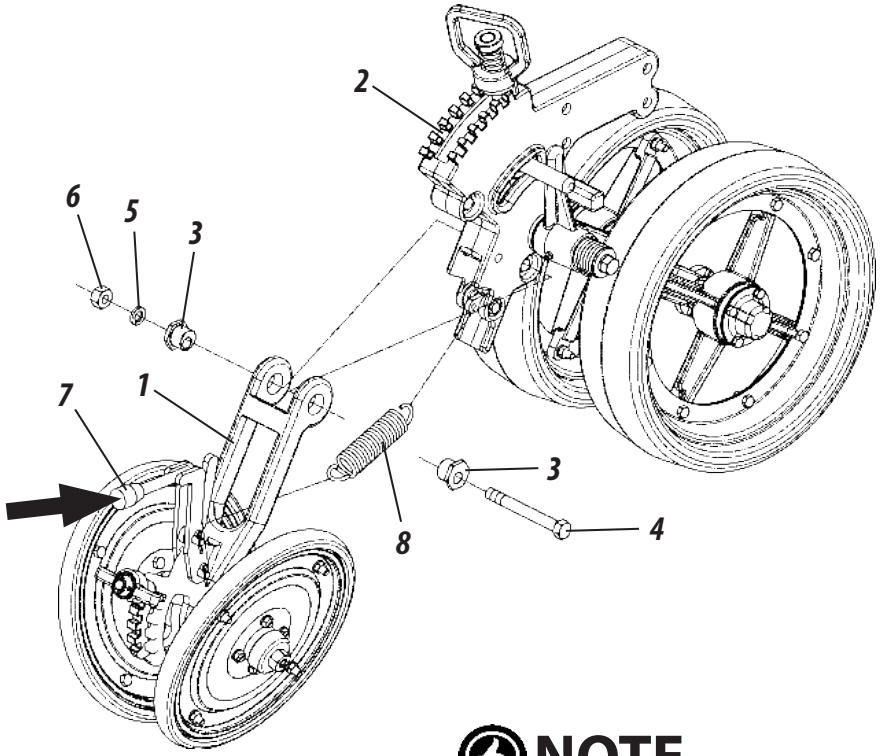

NOTE

Repeat the above procedure to assemble the other compactor wheels.

ROW ASSEMBLY

Assemble the rows (1), proceeding in the following manner:

1- Insert the cart (2) between the row plates (1), fastening them with screws (3), lock washers (4) and nuts (5).

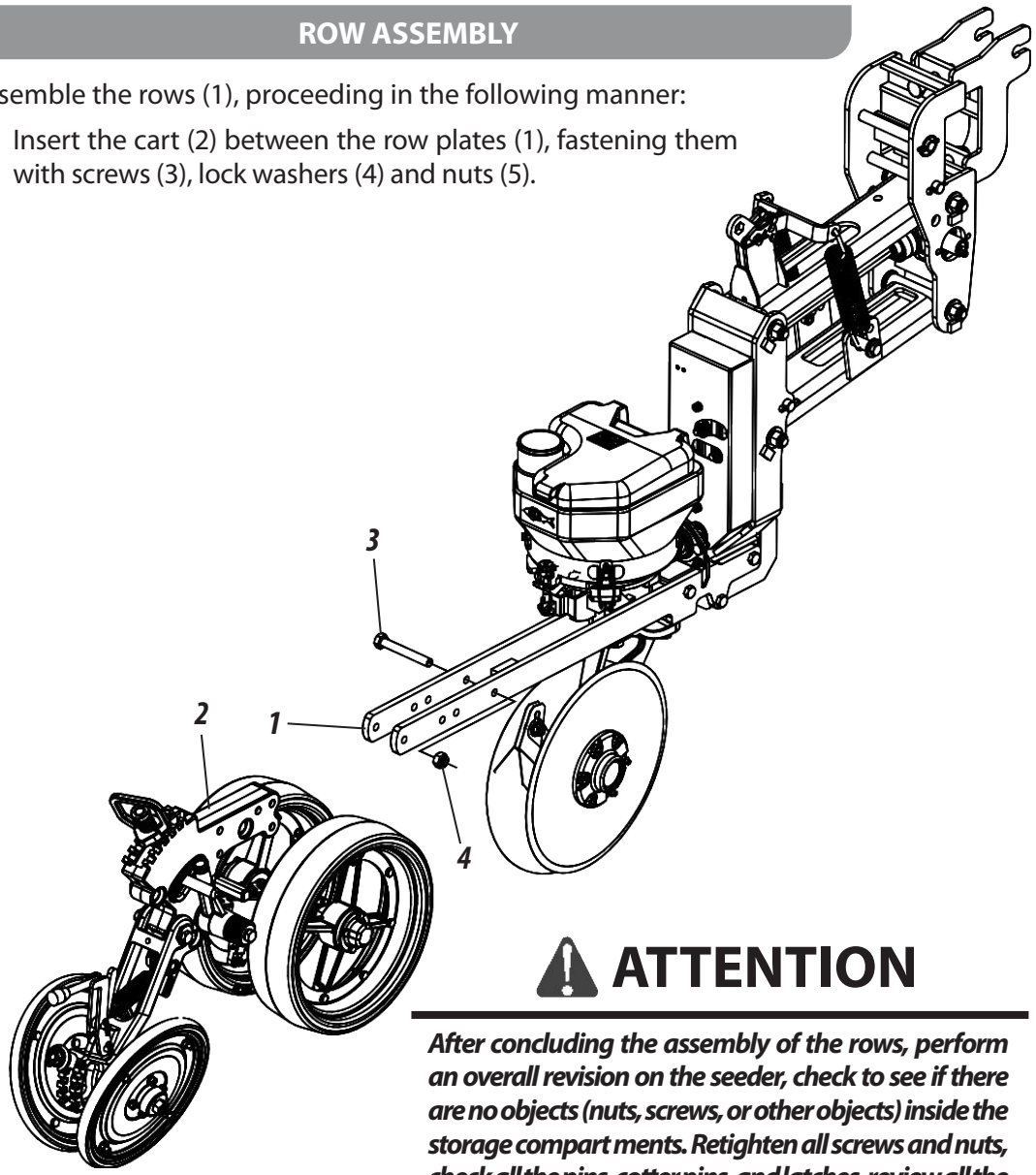

ATTENTION

After concluding the assembly of the rows, perform an overall revision on the seeder, check to see if there are no objects (nuts, screws, or other objects) inside the storage compart ments. Retighten all screws and nuts, check all the pins, cotter pins, and latches, review all the hoses.

ASSEMBLY

ASSEMBLY

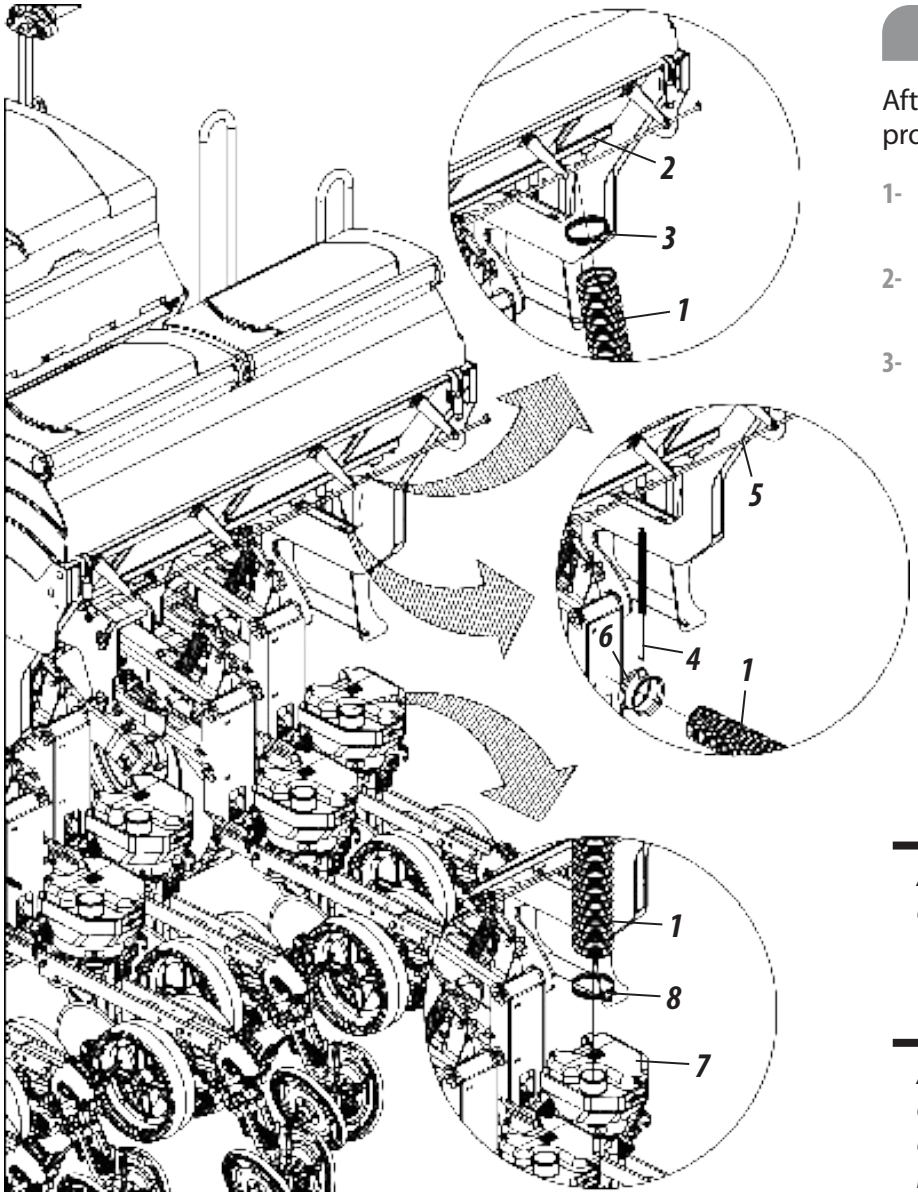

SEED CONDUCTOR HOSE ASSEMBLY

After concluding the assembly of the rows, fasten the seed conductor hoses (1), then to do this proceed as follow:

1- Couple the seed conductor hoses (1) to the upper seed storage compartment (2), using the clamp (3).

2- Then fasten the spring (4) to the support (5) and the clamp (6),after inserting the seed hose (1) inside the clamp (6).

3- Finally, couple the seed conductor hose (1) to the lower part of the seed storage 7), fastening, it using the clamp (8).

NOTE

After concluding the assembly of the seed conductor hose (1), perform the same procedure on all other rows.

ATTENTION

After concluding the assembly of the rows, perform an overall revision on the seeder, check to see if there are no objects (nuts, screws, or other objects) inside the storage compartments. Retighten all screws and nuts, check all the pins, cotter pins, and latches, recheck hoses.

HYDRAULIC SYSTEM ASSEMBLY WITHOUT ROW MARKER SP TOPOGRAFIC 4500 TO 8500

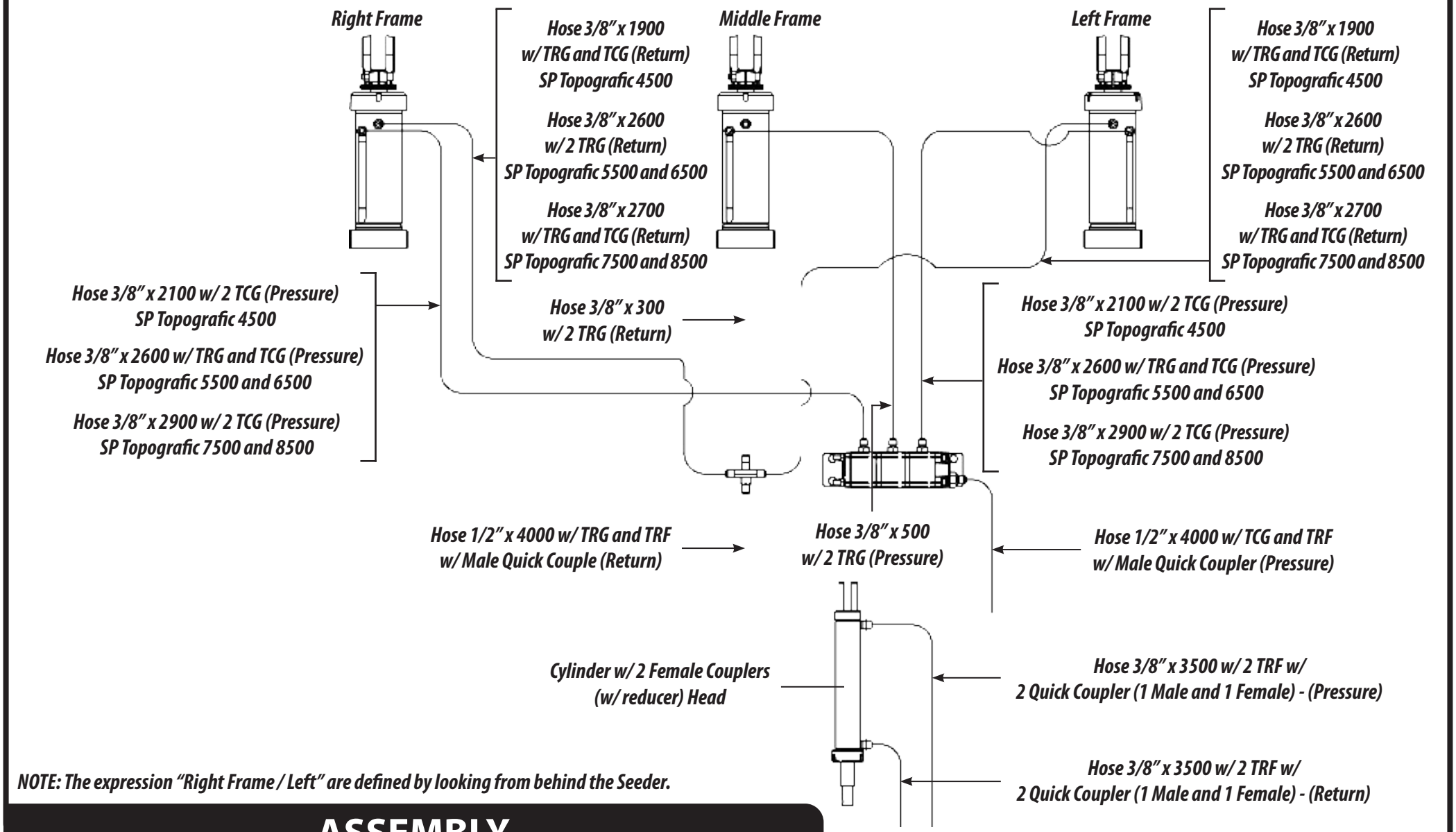

NOTE: The expression "Right Frame / Left" are defined by looking from behind the Seeder.

ASSEMBLY

ASSEMBLY

HYDRAULIC SYSTEM ASSEMBLY WITH ROW MARKER SP TOPOGRAFIC 4500 TO 7500

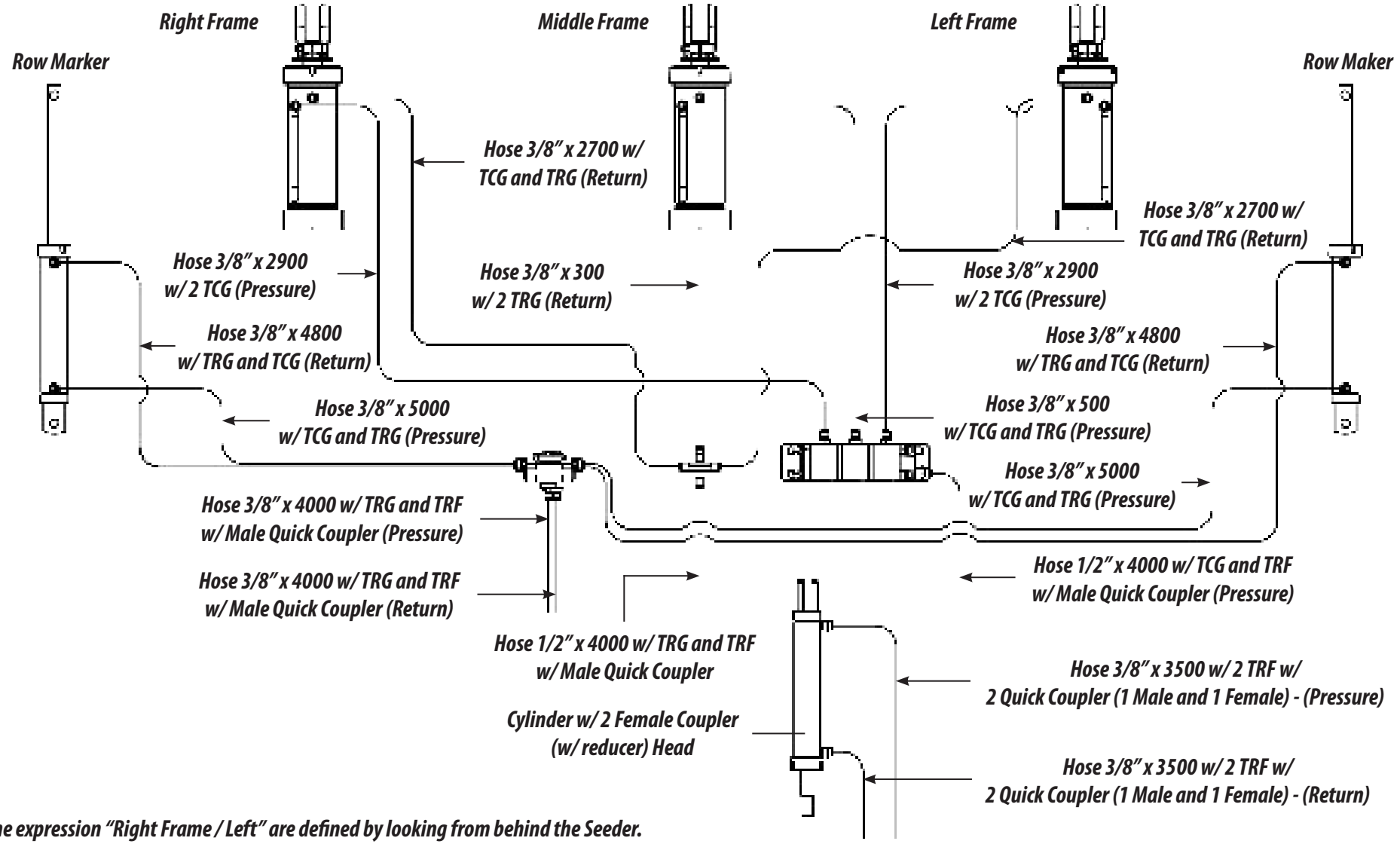

NOTE: The expression "Right Frame / Left" are defined by looking from behind the Seeder.

HYDRAULIC SYSTEM ASSEMBLY WITH ROW MARKER SP TOPOGRAFIC 8500

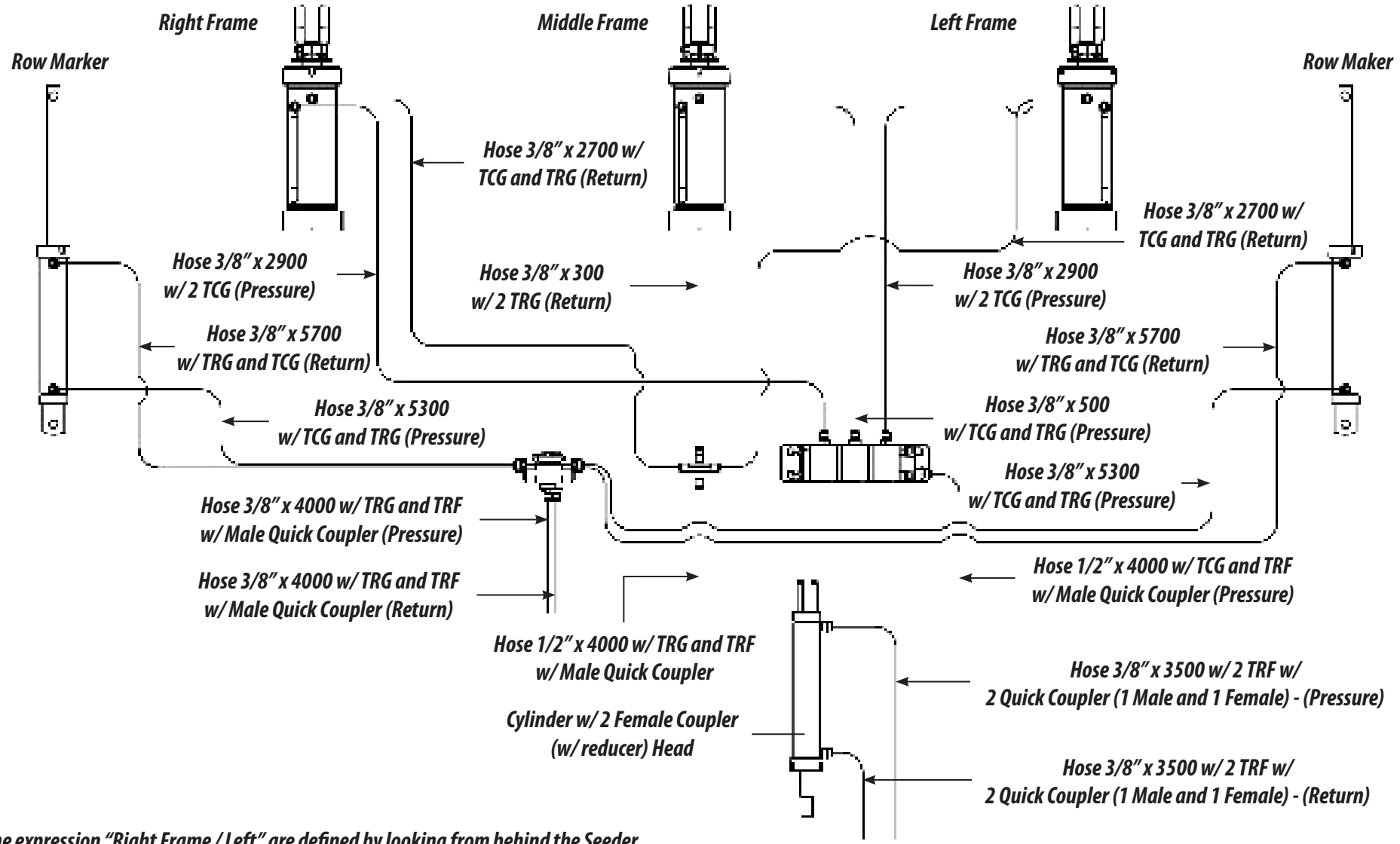

NOTE: The expression "Right Frame / Left" are defined by looking from behind the Seeder.

ASSEMBLY

ASSEMBLY

HYDRAULIC SYSTEM ASSEMBLY WITHOUT ROW MARKER SP TOPOGRAFIC 9500

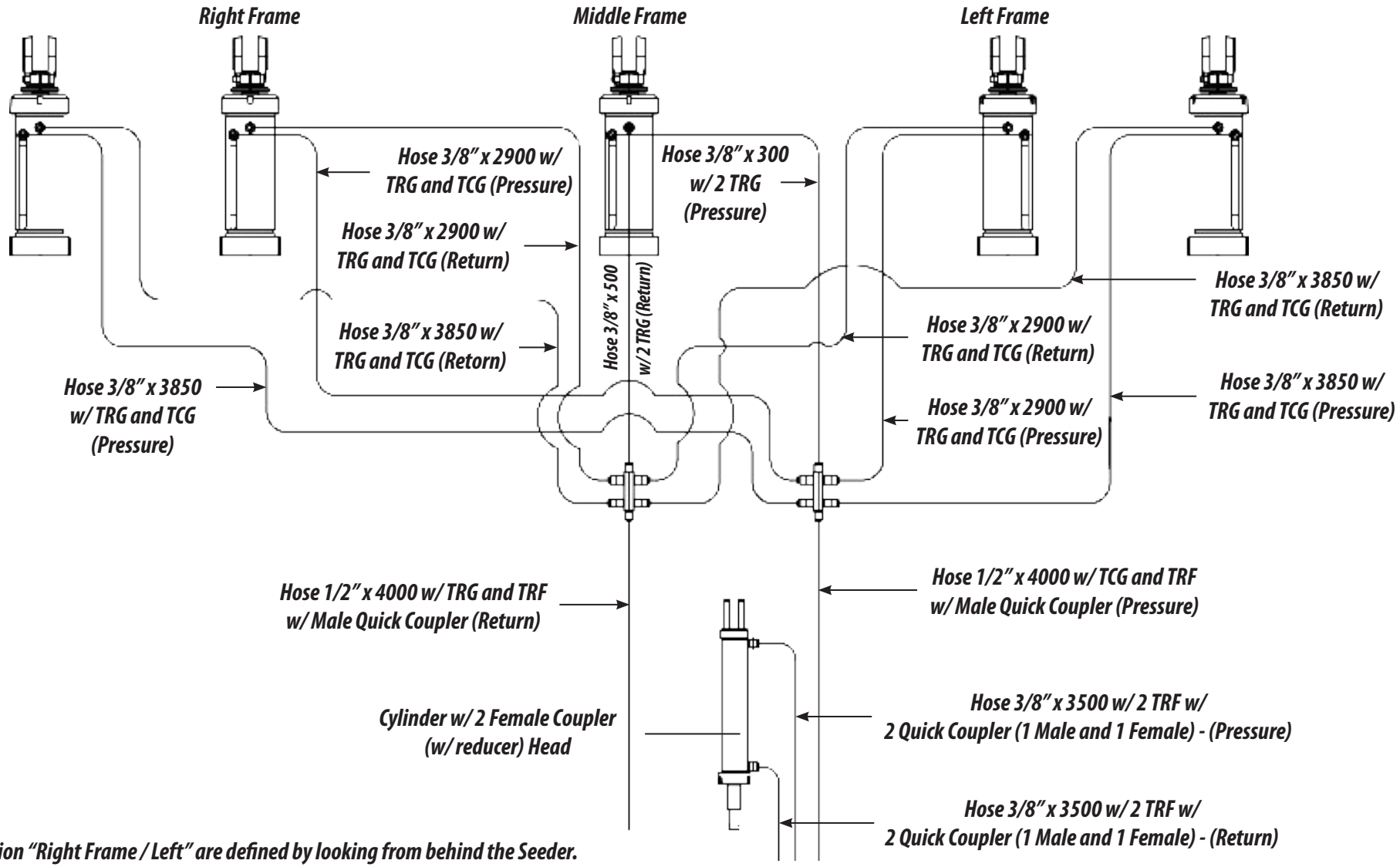

NOTE: The expression "Right Frame / Left" are defined by looking from behind the Seeder.

HYDRAULIC SYSTEM ASSEMBLY WITH ROW MARKER SP TOPOGRAFIC 9500

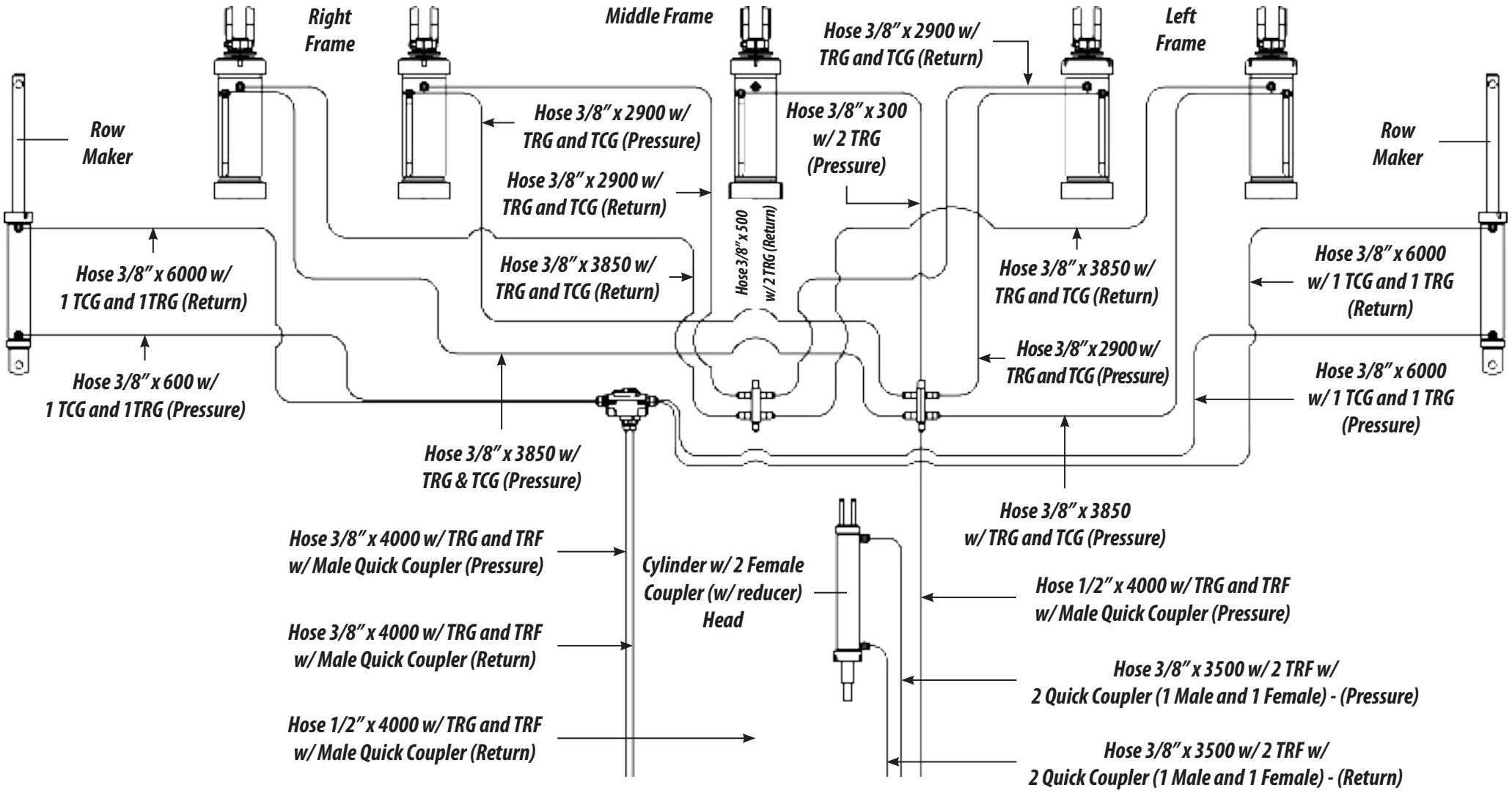

NOTE: The expression "Right Frame / Left" are defined by looking from behind the Seeder.

ASSEMBLY

ASSEMBLY

CUTTING DISC ASSEMBLY AND ROW MARKER

The seeders are shipped from the factory with the row markers (1) assembled. The discs (2), are assembled inversely to their respective markers in order to avoid risks of accidents during the shipment process.

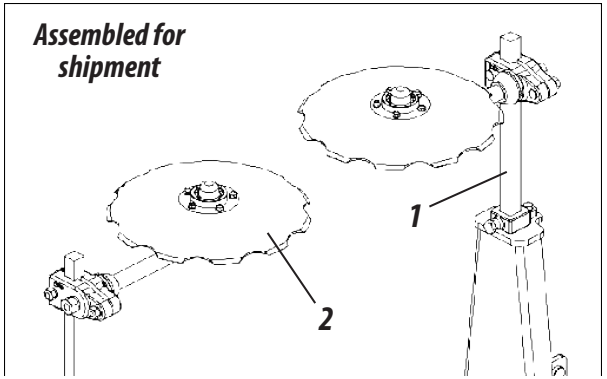

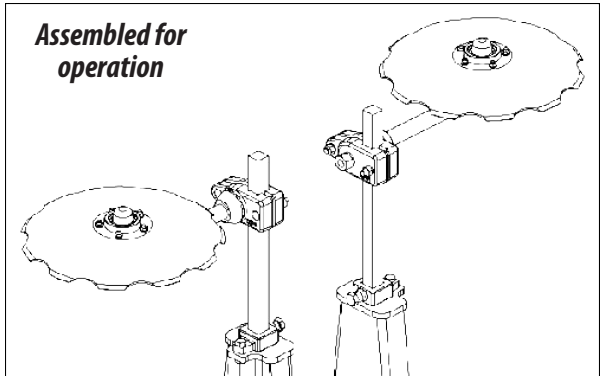

Before starting to operate the seeder, change the position of the discs (2) and the row markers (1), proceed in the following manner:

1- Loosen the screws (3), washers and nuts (4), remove the disc supports (5) and assemble the markers contrary to how they were originally assembled.

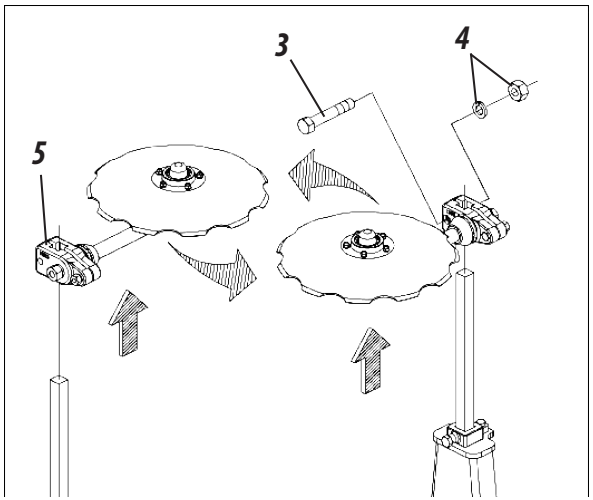

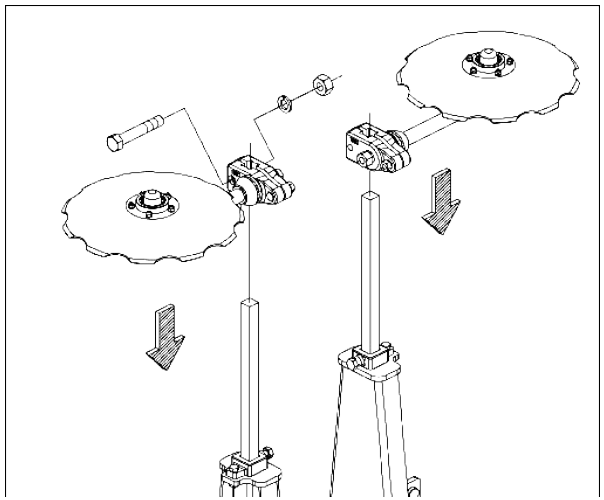

IMPORTANT

Before starting to assemble the row marker, look for a safe and easy access for facilitating the assembly process.

SYSTEM FOR LIFTING AND LOWERING THE COUPLING HEAD

For purposes of ergonomics, the **SP TOPOGRAFIC** is shipped from the factory with a lifting system for the coupling head (1) using a hydraulic cylinder (2). Before the seeder is shipped in the truck, proceed as follows to lift the coupling head (1):

1- Couple the female quick couplers (3) to the hydraulic cylinder (2). Then, couple the male quick couplers (4) to the hoses (5).

2- After, coupling the males quick couplers (4) to the female quick couplers (3) and the other end to the hoses (5) in the tractor.

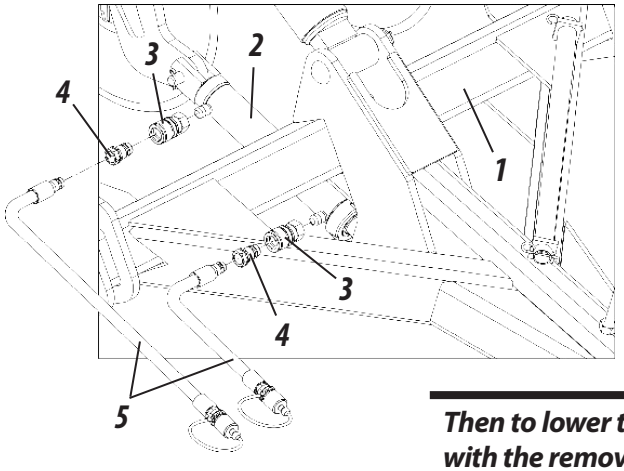

3- After, release the latches (6), pins (7) and remove the controller (8).

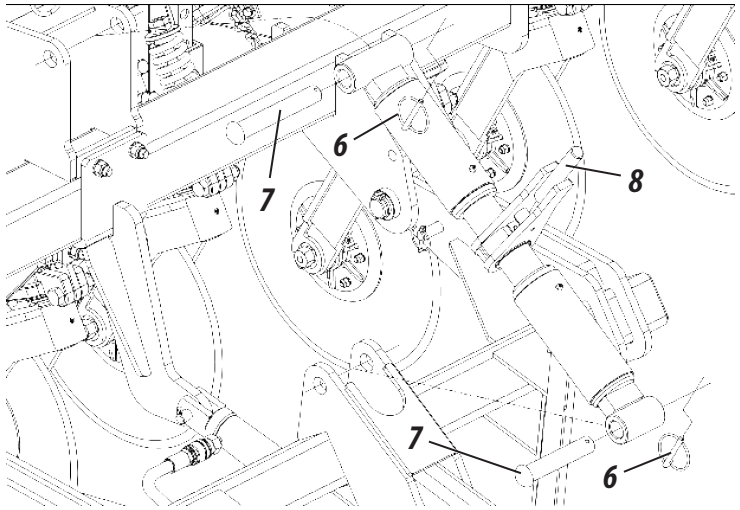

4- After that, activate the hydraulic cylinder (2) making it lift the coupler head (1).

5- Finally latch the coupler head (1) using the pins (9) and latches(10).

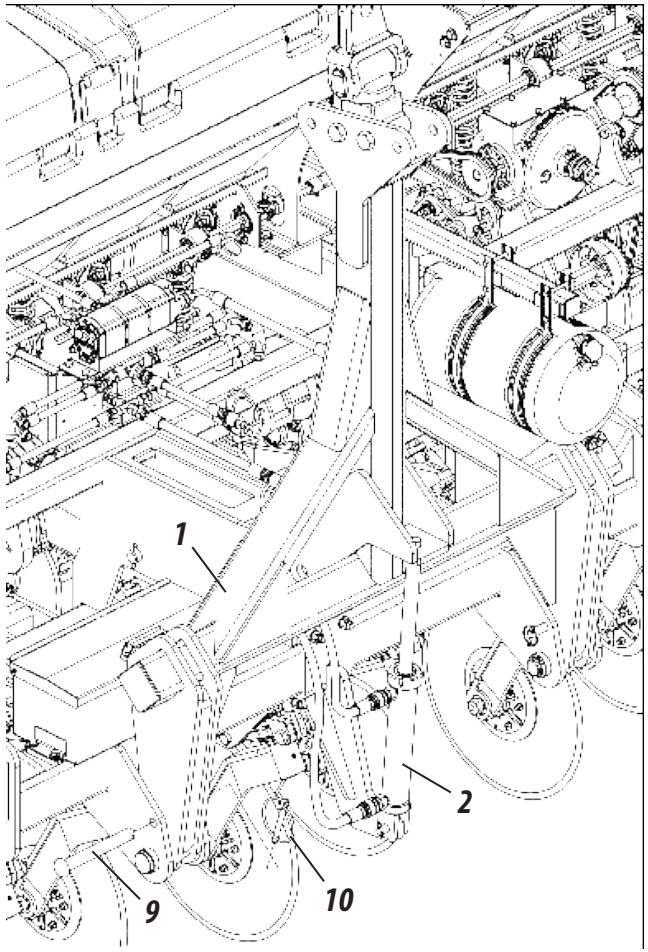

IMPORTANT

Then to lower the coupler head (1), perform the reverse process, concluding with the removal of the hoses (5) and female quick couplers (3) and male (4) from the cylinder (2) and the head (1). When not operating or transporting the seeder with the hoses (5) coupled to the cylinder (2). Ignoring this warning can cause serious accidents or even death.

ATTENTION

Do not operate the hydraulic cylinder (2) before removing the controller (8). Ignoring this warning can cause serious accidents or even death.

NOTE

Before lowering the coupler head (1), make sure no people are on the coupler head. Ignoring this warning can cause serious accidents or even death.

COUPLING

COUPLING TO THE TRACTOR

Before coupling the seeder to the tractor, verify if the tractor is equipped with weights or ballasts in the front, so that it does not lift up the tractor. The rear wheels will provide increased stability and traction on the soil. Proceed as follows to couple the seeder:

1- Approach the tractor slowly to the seeder in reverse, pay close attention to applying the brakes.

2- After leveling the coupler (1) from the seeder to the tractor coupler using the adjustments (2) on the coupler adjustment plate. After that, approach the tractor to reverse, pay attention in applying the brakes when necessary.

3- Then, engage the coupler head (1) to the tractor, fastening it by using the coupler pin (3) and latch (4).

4- After, couple the rest of the hoses (5) in the tractor quick coupler.

ATTENTION

After concluding the coupling of the seeder to the tractor, remove the hoses (6) to from the male quick couplers (7) and female (8) from the cylinder (9) coupler head (1). Do not operate or transport the seeder with the hoses (6) coupled to the cylinder (9) coupler head (1). Ignoring this warning can cause serious accidents or even death.

IMPORTANT

Before connecting or disconnecting the hydraulic hoses, turn off the engine and release the hydraulic pressure by activating the control levers completely. When releasing the pressure from the system, certify nobody is near the surrounding area of movement around the equipment.

NOTE

When coupling the seeder, look for a safe and easily accessible place; always use a low gear and slow speed.

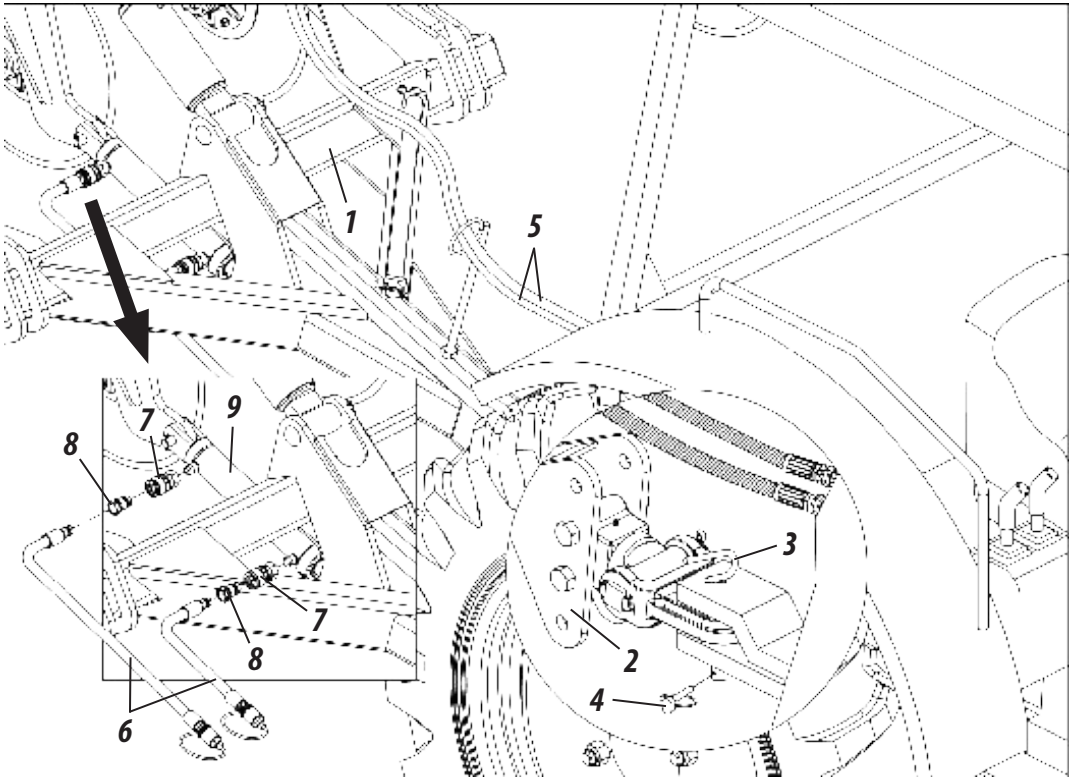

LEVELING

After concluding the coupling of the **SP TOPOGRAFIC**, level it, proceeding as follows:

1- Place the tractor and seeder on a flat location.

2- Then level the equipment using the controller (1).

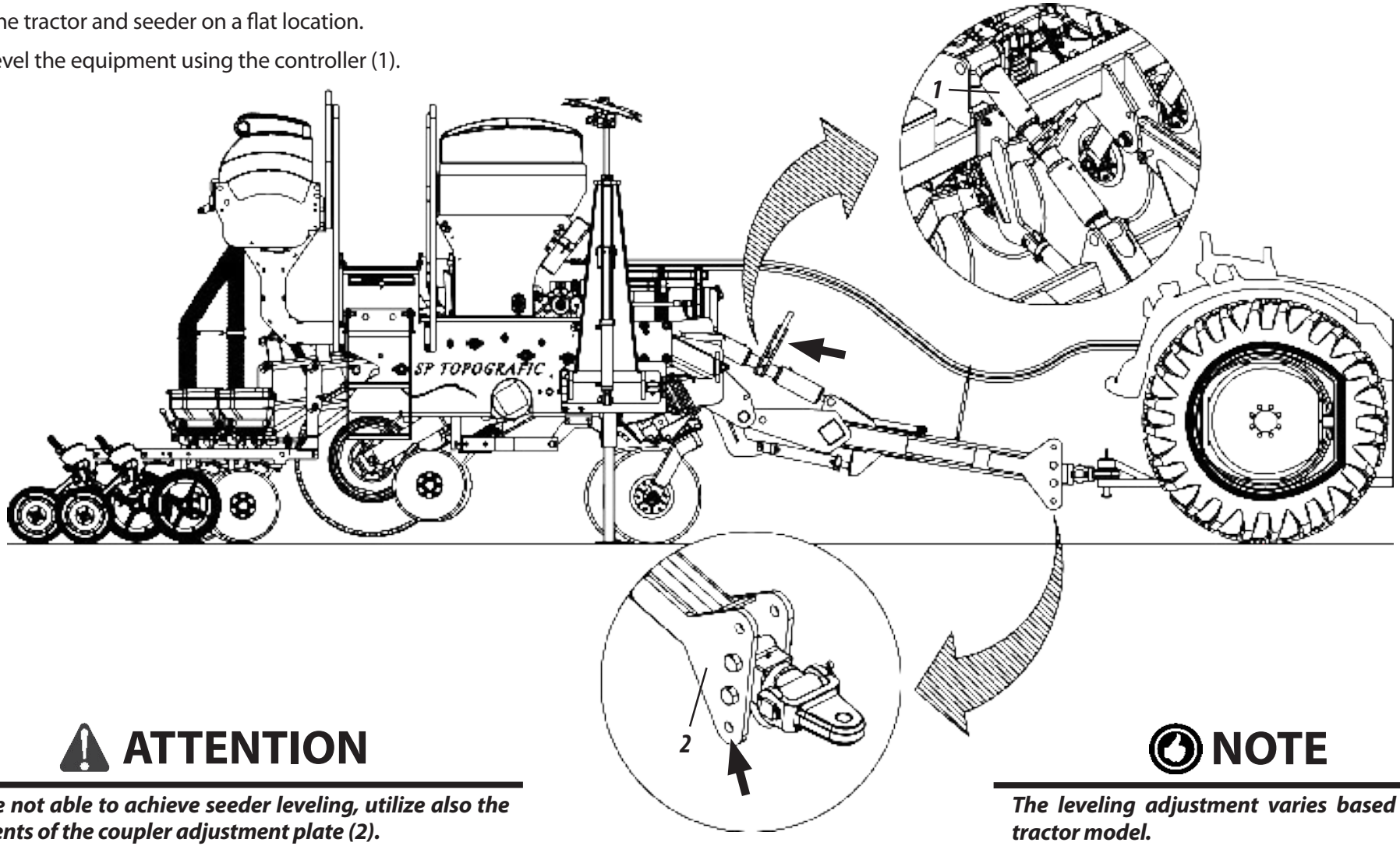

ATTENTION

If you are not able to achieve seeder leveling, utilize also the adjustments of the coupler adjustment plate (2).

NOTE

The leveling adjustment varies based on the tractor model.

TRANSPORT

PROCEDURE FOR TRANSPORT

Proceed as follows before transporting the seeder:

1- Lift the support foot (1) and fasten it using the pin (2) and latch (3).

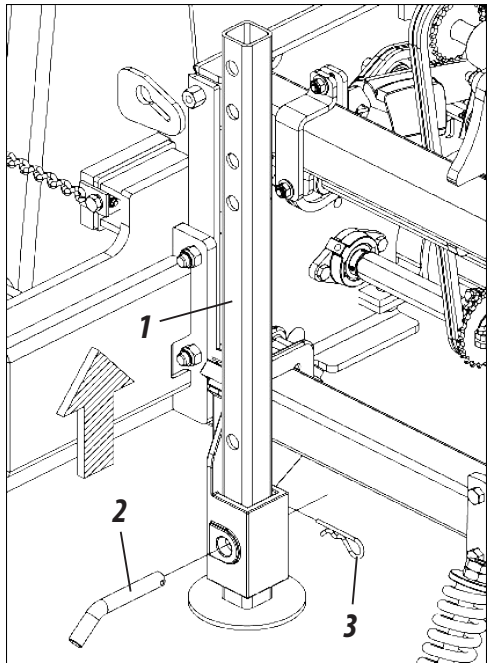

IMPORTANT

Do not transport the seeder when loaded, as this can damage the equipment. We recommend loading it only in the operating location.

If the seeder remains in the field for any reason, we recommend covering it is with a waterproof tarp to avoid dampness.

Do not transport the seeder without verifying all the cited procedures.

2- After the seeder is lowered, check if it is level to the soil, if not, level it using the level control (4) of the coupler head.

3- Then, lift it by activating the complete course of the hydraulic cylinder (5) and install the yellow latch (6) and the shaft in the same then latch the pin (7) and latch (8).

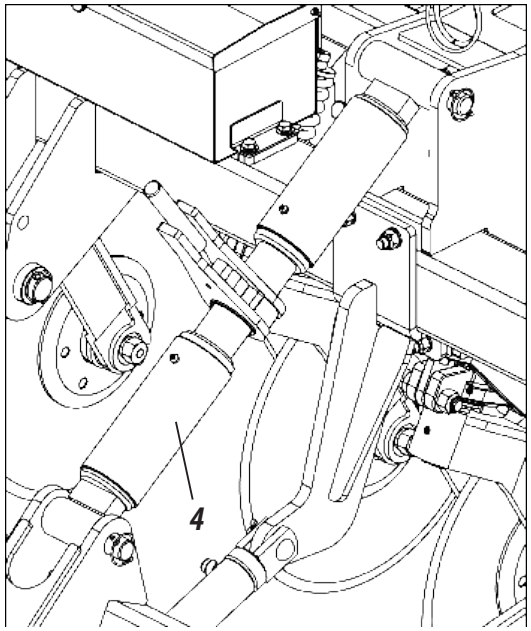

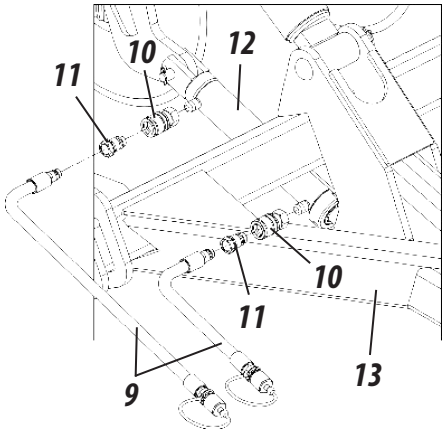

4- Conclude by removing the hoses (9) and the female quick couplers (10) and the male (11) coupler of the cylinder (12) from the coupler head (13).

ATTENTION

Do not transport the seeder with the hoses (9) coupled to the cylinder (12) the coupler head (13). Ignoring this warning can cause serious accidents or even death.

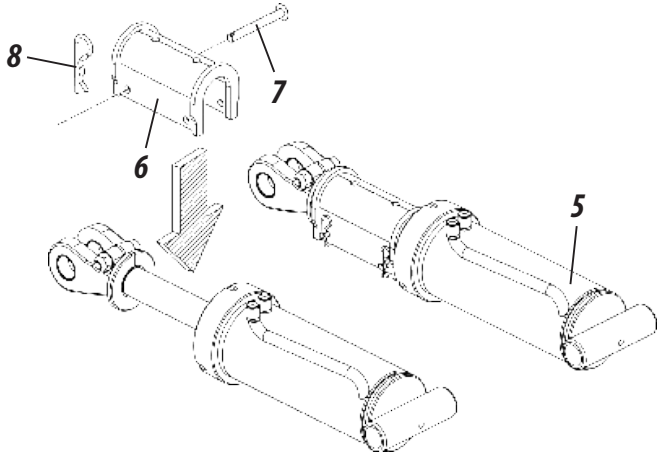

PROCEDURE FOR OPERATING - PART I

Before operating the seeder, proceed as follows:

1- Lift the support foot (1) and fasten it with the pin (2) and latch (3).

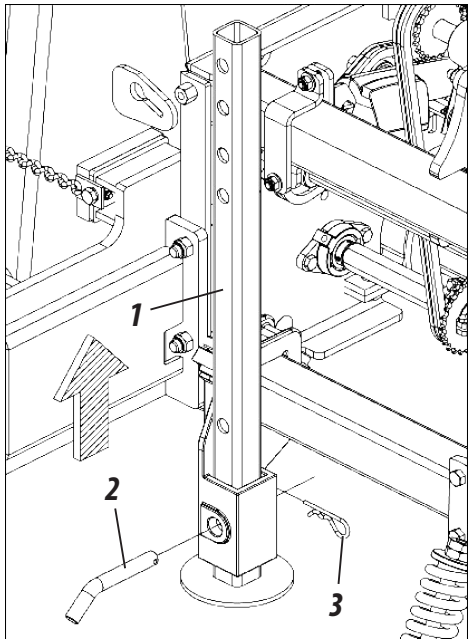

2- When the seeder is lowered, verify if it is level to the soil, if not, level it using the level controller (4) for the coupler head.

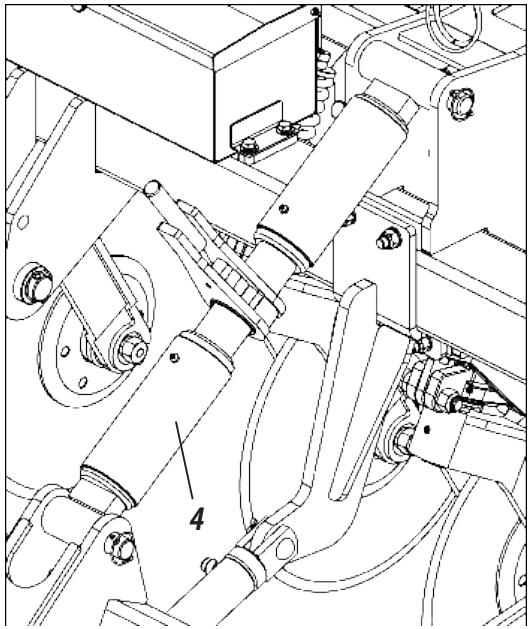

3- Following that, lift the rows by activating the complete course of the hydraulic cylinders (5) and install the restraining rings (6) on the shafts (7) on the same.

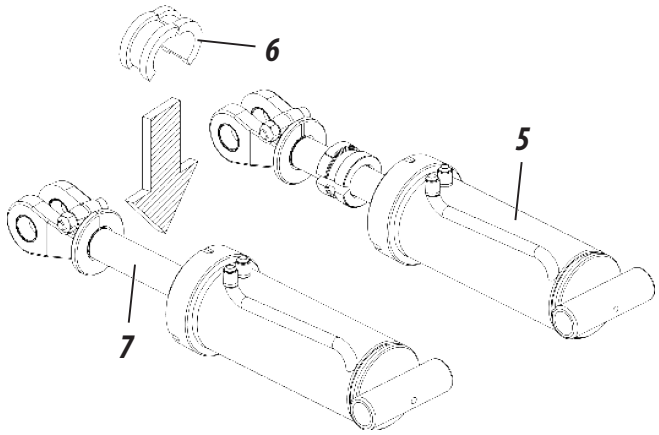

IMPORTANT

Always place the same number of restraining rings (6) on all the hydraulic cylinders (5) when lifting the wheels. Do not operate the seeder without first verifying all the cited procedures.

4- After removing the hoses (8) and the female quick couplers (9) and male (10) from the cylinder (11) to the coupler head (12).

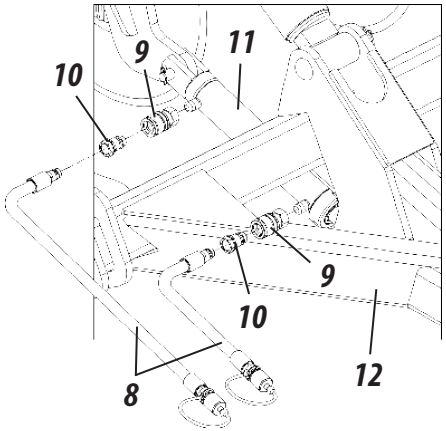

ATTENTION

Do not operate the seeder with the hoses (8) coupled to the cylinder (11) to the coupler head (12). Ignoring this warning can cause serious accidents or even death.

NOTE

After coupling the restraining rings (6), the SP TOPOGRAFIC will always operate at the same depth, in hard soil as well as loose, this is because, the restraining rings (6) limit the course of the hydraulic cylinder (5), which means, they prevent the oscillation of the wheels.

TRANSPORT / OPERATING

PROCEDURE FOR OPERATING - PART II

5- Conclude by removing the screw (13), lock washer (14) and nut (15) unlatching the wheel (17) support clamp (16).

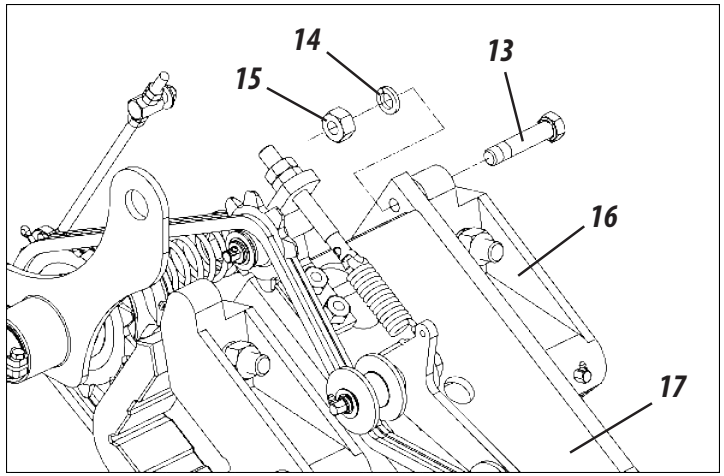

ATTENTION

Do not operate the seeder before removing the screw (13), lock washer (14) and nut (15) from the clamp (16) of the wheel support (17). Ignoring this warning can cause failures in the sowing of seeds.

LADDER USE

The articulating ladder (1) must only be used when loading or performing maintenance on the storage compartments of the **SP TOPOGRAFIC.** Before using the articulating ladder (1), certify the seeder is stopped and the tractor is turned off.

ATTENTION

Do not remain on the ladder when the seeder is operating or being transported.
Do not operate or transport the seeder when the ladder is opened.
Do not transport people on the platform, ladder, or any other part of the seeder.
Ignoring this warning can cause serious accidents or even death.

IMPORTANT

Always use the articulating ladder (1) for accessing or loading the storage compartments.
The articulating ladder (1) complies with NBR safety standards.

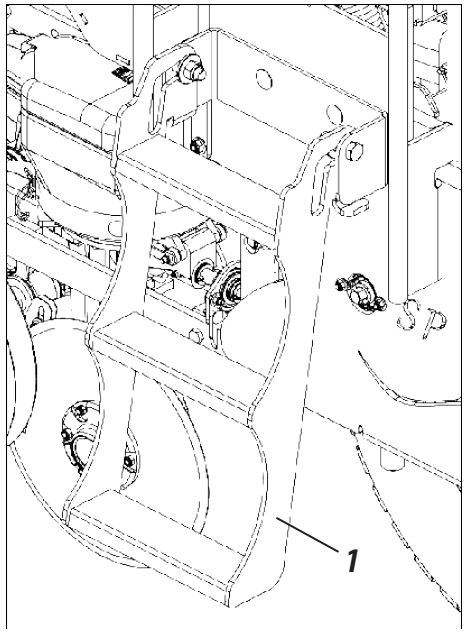

The position for loading or performing maintenance on the storage compartments

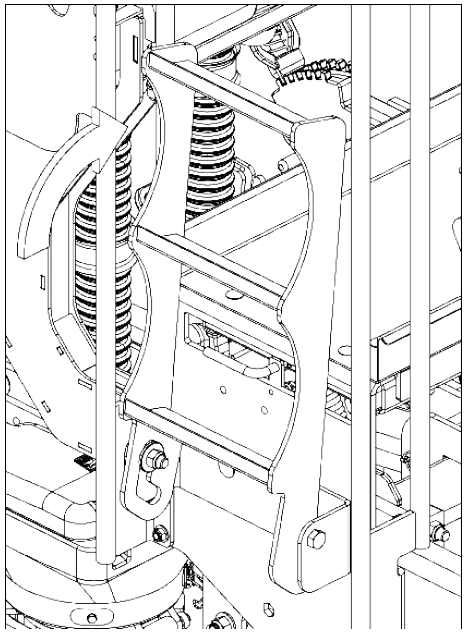

Position for operating or transporting

FRAME FASTENING PLATES

The yellow fastening plates (1) must be used only for transporting and hoisting the seeder. Before starting to transport or hoist it, place the fastening plates (1), in the following manner:

1- Couple the yellow fastening plates (1) to the front and rear part of the frame (2) on both sides.

2- Following that, latch the yellow fastening plates (1) using the ring latches (3).

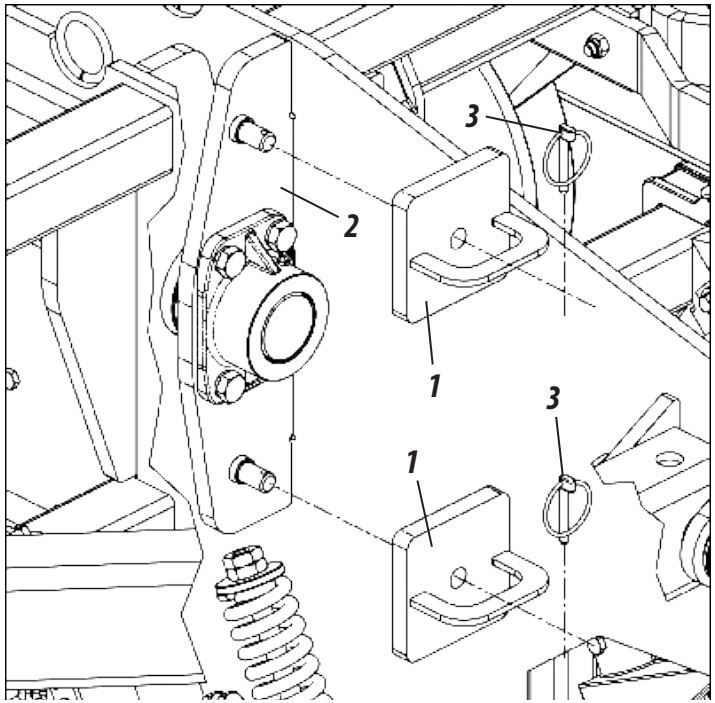

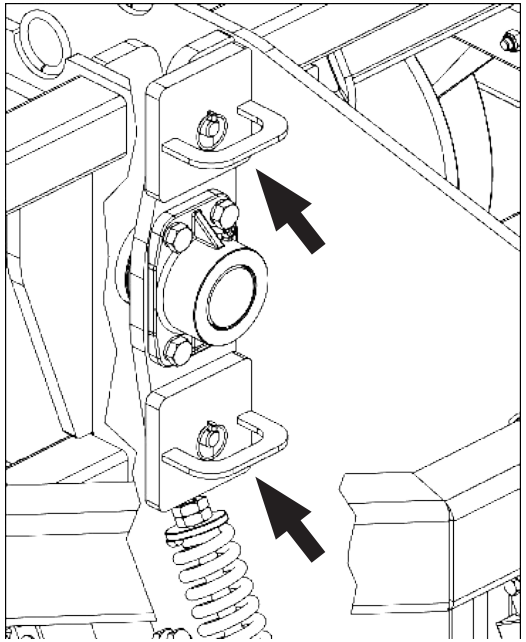

With Plate: For Hoisting

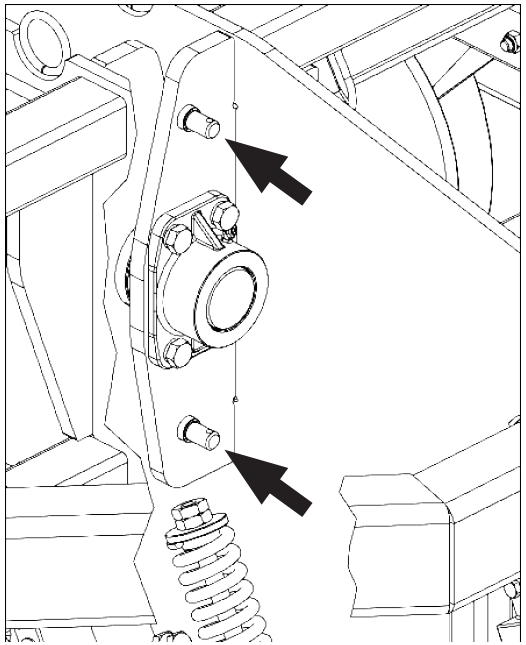

Without Plate: For Operating and Transporting

ATTENTION ***Do not hoist the seeder without first installing the fastening plates (1). Ignoring this warning can cause serious accidents or damage to the seeder.***

IMPORTANT ***Before starting to operate the seeder, remove the fastening plates (1). Ignoring this warning will nullify the articulating system of the seeder and so the seeder will not adjust to the soil.***

NOTE ***The fastening plates (1) must be mounted on the front and rear part of the seeder and on both sides.***

SPACING

SPACING BETWEEN ROWS

The **SP TOPOGRAFIC** model seeders are supplied with spacing based on the number of requested rows, but new spacing adjustments can be performed based on thetype of desired crop.

EVEN NUMBER OF ROWS

Mark the center of the chassis of the **SP TOPOGRAFIC** and divide by 1/2 (half) of the spacing on the left and 1/2 (half) by the right, defining these points as the first two rows. After based on these, assemble the other rows based on this desired spacing.

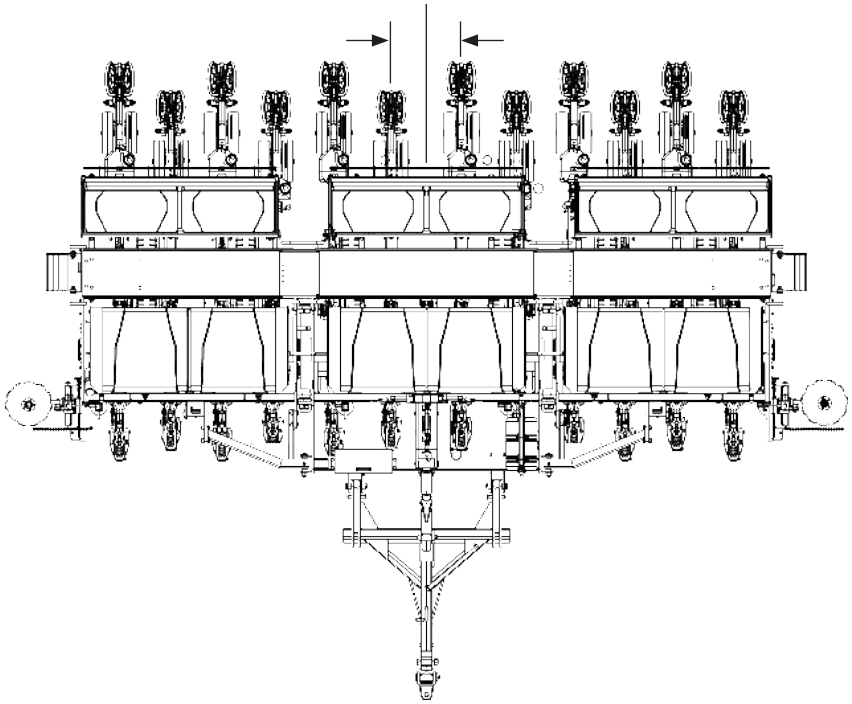

ODD NUMBER OF ROWS

Define the row in the center of the chassis of the **SP TOPOGRAFIC** and based on that, assemble the other rows based on this desired spacing.

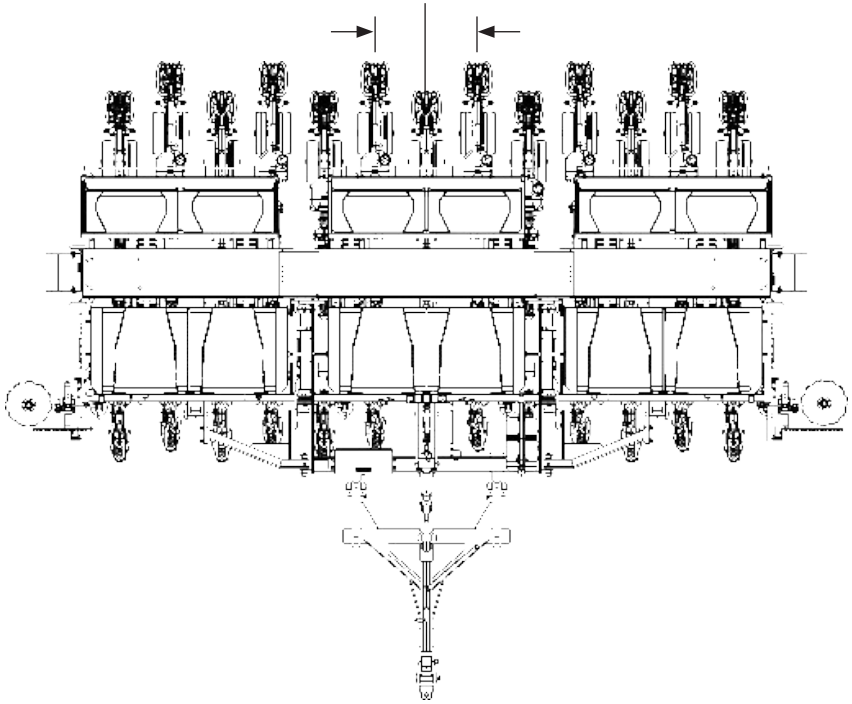

NOTE | ***On the following page, see the possible spacing options, abiding by the above assembly instructions, for assembling the number of even or odd rows.***

MILLIMETER SPACING TABLE (TABLE 02)

The **SP TOPOGRAFIC** model seeders are supplied with spacing based on the requested number of rows, afterwards new spacing formats can be changed according to the desired crop.

Table 02

Model	*Version*	*Nr of Rows*	*Spacing (mm)*
SP TOPOGRAFIC	4500	11/11 - (11 Linhas)	450
		11/10 - (10 Linhas)	500
	5500	13/13 - (13 Linhas)	450
		13/12 - (12 Linhas)	500
	6500	15/15 - (15 Linhas)	450
		15/14 - (14 Linhas)	500
	7500	17/17 - (17 Linhas)	450
		17/15 - (15 Linhas)	500
	8500	19/19 - (19 Linhas)	450
		19/17 - (17 Linhas)	500
	9500	21/21 - (21 Linhas)	450
		21/19 - (19 Linhas)	500

OPERATING PREPARATIONS

SKIDDING INDEX

Due to such factors as the germination index, physical purity, vigor (supplied on the seed packages), as well as pests and diseases that can occur while the crop is growing, the number of plants when harvesting can be fewer than what was effectively sown while seeding.

Besides that, the local operating conditions must be considered, while seeding, as the tires can skid on the seeder. See the following calculation on the skidding index of the seeder.

1- Place the seeder on a non-deformed surface, such as asphalt, concrete, or compacted soil. Mark with chalk one point on the seeder tire;

2- Following that, place the seeder in slow motion and mark the space traveled by the tire for ten complete turns **(this is the theoretic distance).**

3- After, place the seeder in the local operating conditions (seeding area) and mark with chalk the seeder tire.

4- Finally operate the seeder at operating speed and mark the space traveled by the tire for ten complete turns **(this is the real distance).**

5- Have the data available and use the following equation to calculate skidding.

EXAMPLE: The Seeder on concrete or compacted soil, obtains a distance of 21.25 meters from the ten complete turns of the tire; In the field a distance of 27.95 meters was obtained from the tire turning ten times, determined as follows:

$$\text{Skidding} = 1 - \left(\frac{\text{distância teórica}}{\text{distância real}}\right)$$

$$\text{Skidding} = 1 - \left(\frac{21{,}25}{27{,}95}\right) = 0{,}76$$

$$\text{Skidding} = 1 - 0{,}76 = 0{,}24$$

ATTENTION | ***The tires on the seeder must be the same design and same tire pressure. The wheels must be adjusted the same as the spring pressure.***

CONCLUSION:

Thus, the skidding index was defined as 0.24 represents 24% of skidding.

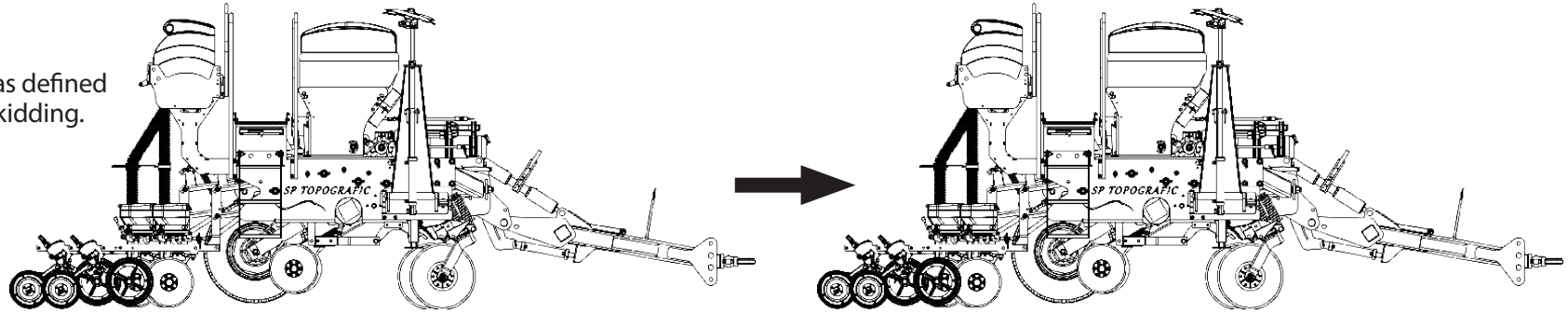

ROW MARKER ADJUSTMENT

Adjusting the row markers is important in order to obtain a uniformly spaced crop, making the end seed row the same spacing as the last row planted, thereby facilitating operations. Then to adjust the row markings proceed as follows:

1- First, it is necessary to know the row spacing, the number of rows being used in the operation in the front tractor. Use the following formula, followed by an example:

EXAMPLE: When planting 13 rows in the seeder, there is 0.45 meter spacing and the front measurement of the tractor is 1.43 meters, as follows:

Formula: $D = \frac{E \times (N+1) - B}{2}$

Solution: $X = \frac{0{,}45 \times 14 - 1{,}43}{2}$

$D = 2{,}43$ **meters**

WHERE:

E = *Spacing between rows (meters)*
N = *Number of rows in the seeder*
B = *Front tractor measurement*
D = *Distance of the marker*

2- Adjust the row marker disc as 2.43 meters until the center of the first row of the crop.

3- The row markers are sequences, one below the next, however, if during the crop seeding, before finishing the row, there is any need to interrupt the work, activate the row marker valve so that you continue working with the marker on the correct side.

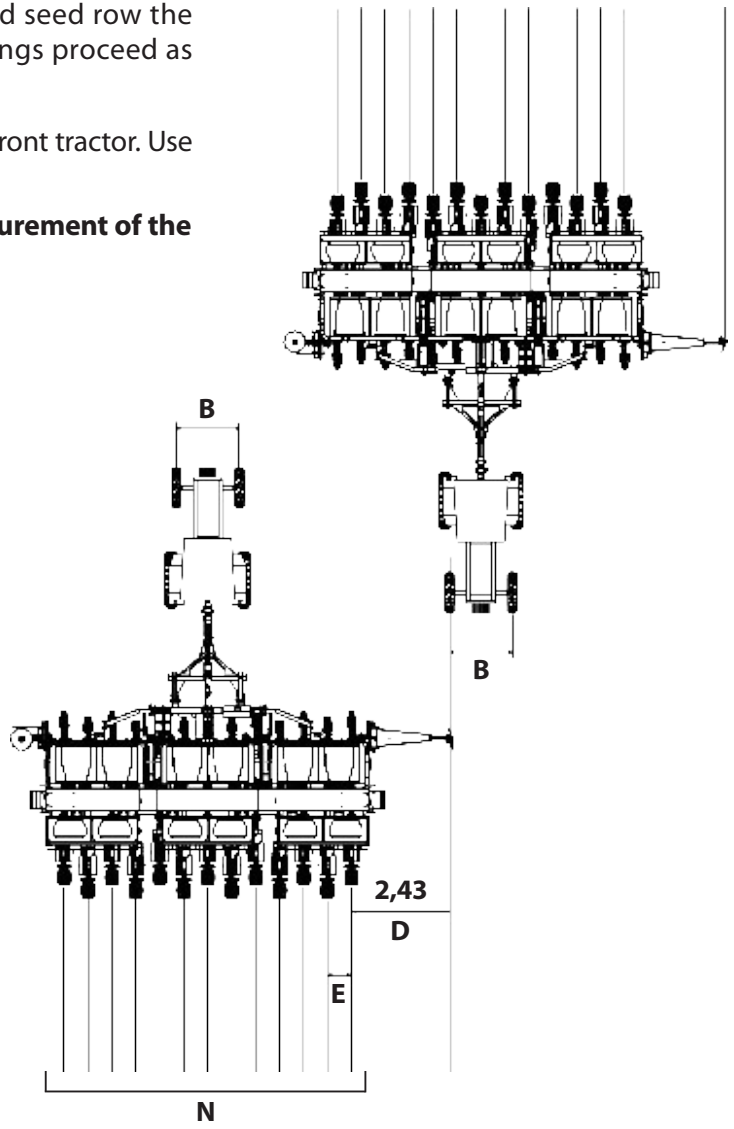

NOTE | ***In order for the row marker to return to the same side it is necessary to activate the valve twice***

ATTENTION

Avoid accidents caused by an intermittent action from row marking.

When activating the seeder, be sure there are no people on the row markers or in the area where they will be marked.

ADJUSTMENTS

ADJUSTING THE ROW MARKER DISCS

The discs (1) of the row markers (2) are equipped with angular adjustment in order to facilitate the work of marking the soil. Then to adjust the (2) row (1) marking discs, proceed as follows:

1- Release the nut (3), turn the disc (1) to the desired position.

2- Then retighten the nut (3), fastening the disc (1) in the desired position.

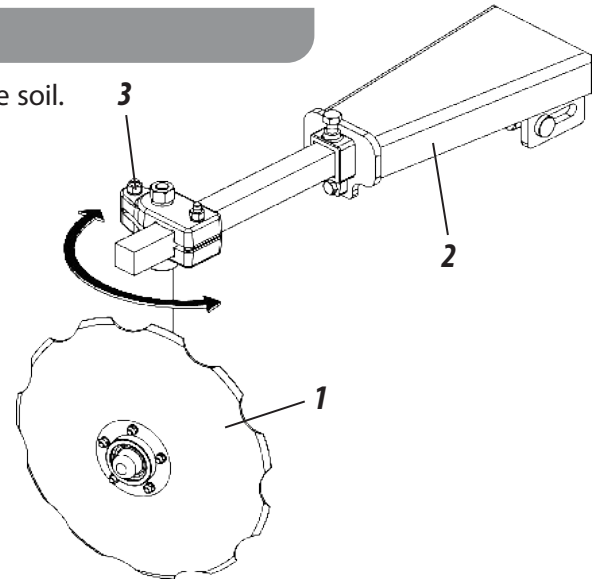

ATTENTION ***Before making any adjustments on the row marker, make sure it is on the soil, the seeder is motionless, and the tractor is turned off.***

ADJUSTING THE ROW MARKER BAR

The row markers (1) are equipped with distance adjustment based on the number of rows and tractor size. Then to adjust the row marker distance (1), proceed as follows:

1- Loosen the screw (2), move the bar (3) to the desired position.

2- Then retighten the screw (2), fastening the bar (3) in the desired position.

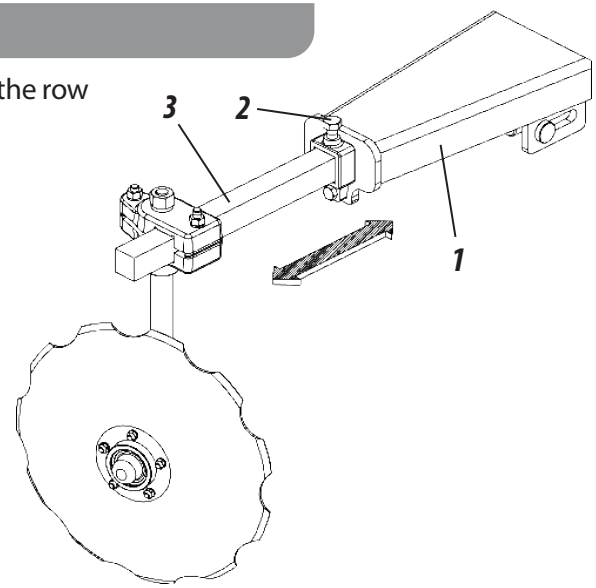

IMPORTANT ***To know the distance for adjusting the row marker, perform the calculation as stated in the previous page.***

RATCHET ADJUSTMENT

Place the shims in the hydraulic cylinder in order to limit the depth of the discs as stated **in the instructions on page 30**, and then adjust the ratchet (1) according to the necessities of the work, thereby assuring the action of the power transmission system:

1- Loosen the nuts and counter nuts (2), adjust the rod (3) for correct activation of the ratchet (1).

2- Then, retighten the nuts and counter nuts (2).

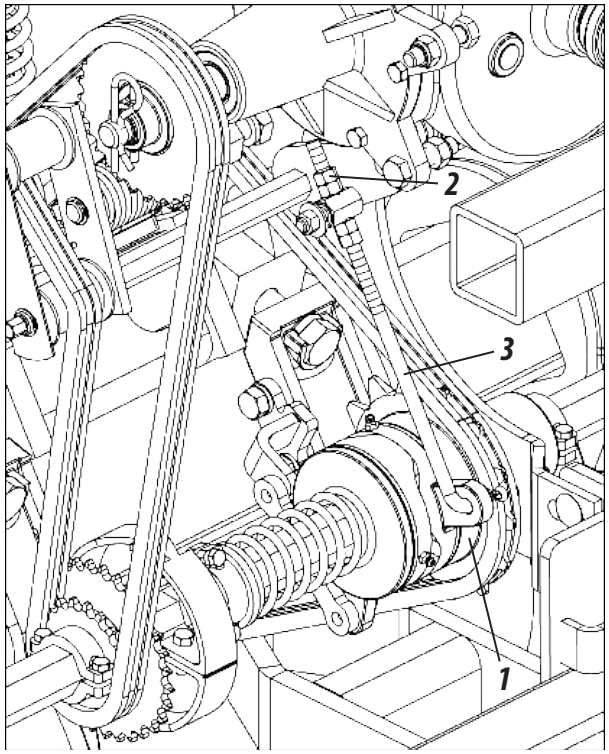

ATTENTION

Non-compliance to this adjustment process can disable the ratchet.

IMPORTANT ***When adjusting the ratchet, repeat this process on all ratchets in the seeder.***

ADJUSTMENT OF THE SIDE LIMITING DEPTH WHEEL

In order for the lines of the side frames to have the same depth as the lines of the central frame, adjust the depth limit wheel (1) of the side frames, for this, proceed as follows:

1- Release the lock (2) and remove the pin (3).

2- Then adjust the depth stop wheel (1) according to the **SP TOPOGRAFIC** wheels.

3- Then, replace the pin (2) and lock (1) securing it.

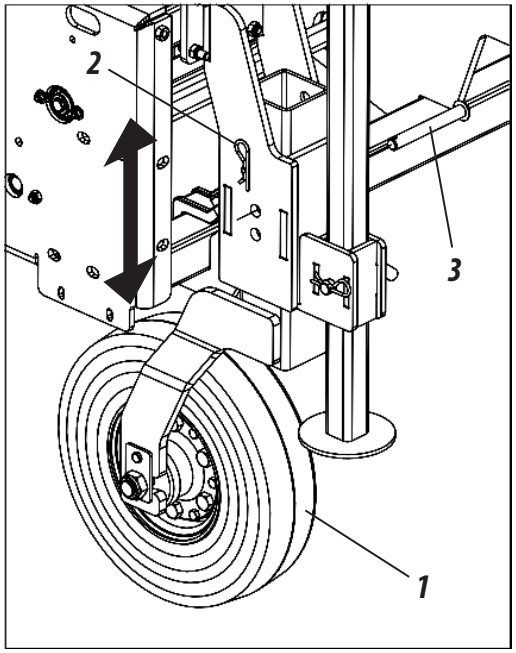

ATTENTION

The depth limiting wheels (1) on the side frames must have the same adjustment.

SEED SPREADING SYSTEM

CHOOSING THE APPROPRIATE DISC

Always use the largest seeds as a parameter for selecting the appropriate disc.

The seeds must not remain jammed in the holes. Then to certify the appropriate disc, place the disc on a table and insert a seed in each hole. Then lift the disc, and all the seeds must remain on the table.

In order to avoid damaging the seed, the thickness of the spreading discs (1) must be equal or slightly larger than the seed.

In cases where the seed exceeds the thickness of the spreading discs (1), adjust the height of the seed as related to the disc, by using different thicknesses of spreading discs and rings with recesses.

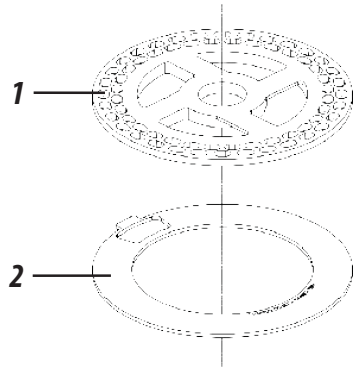

NOTE | ***The SP TOPOGRAFIC seeders are assembled with rings with recesses for the highest seeds.***

IMPORTANT | ***Always use a spacer ring (2) together with the spreading discs (1). The total space of the assembly of the disc and ring must be always equal to 8.5mm in thickness for perfect system adjustment.***

CHANGING THE SEED DISCS

Proceed as follows to change or replace a seed spreading disc:

Lower the lever (1) to disable the latch (2) from the seed storage compartment, **as shown in details "A" and "B".**

NOTE

If there are any seeds in the storage compartment, remove them before changing the disc and ring, thereby avoiding the spilling them on the ground for blocking the closure of the system.

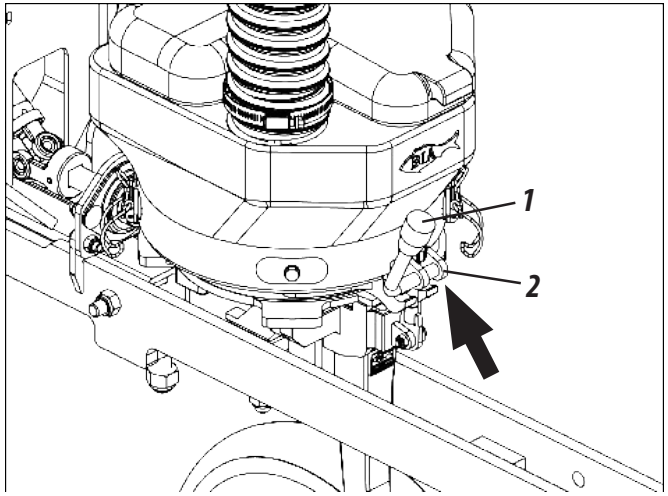

Detail "A"

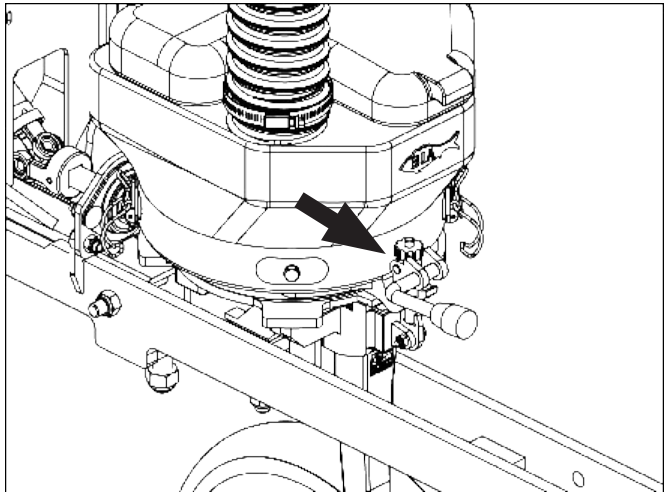

Detail "B"

3rd Step: Then, remove the seed box (4) from the row and turn it, leave the spreader base upside down**, as shown in details "C" and "D".**

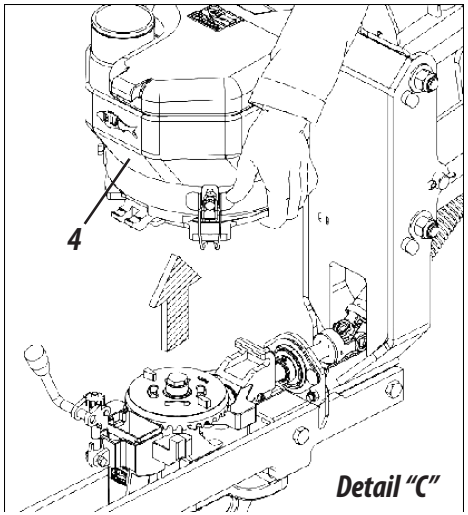

Detail "C"

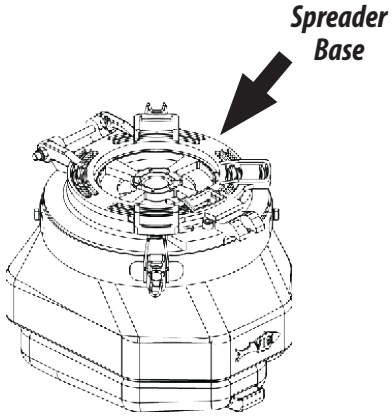

Detail "D"

4th Step: After, release the clamps (5), swing the base (6) and remove the base from the spreader (7) the ring (8) and the disc (9), replace them with the appropriate ring and disc for the crop being seeded, **as shown in details "E".**

Detail "E"

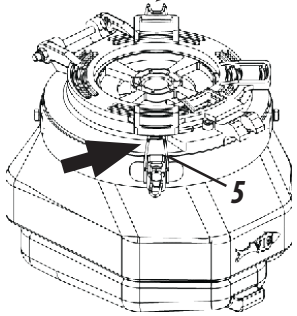

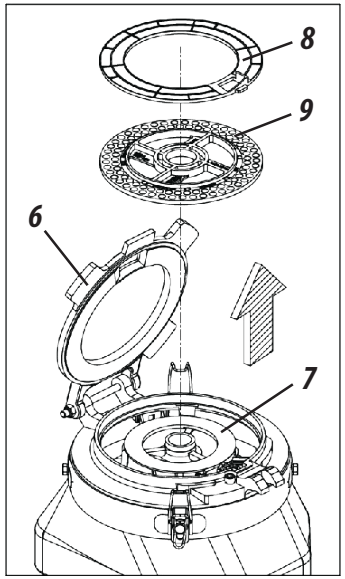

5th Step: When changing the ring (8) and the disc (9), swing the base (6) closing it. Following that, latch the clamps (5) again, **as shown in details "G" and "H".**

Detail "H"

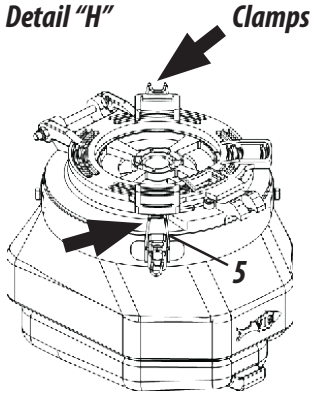

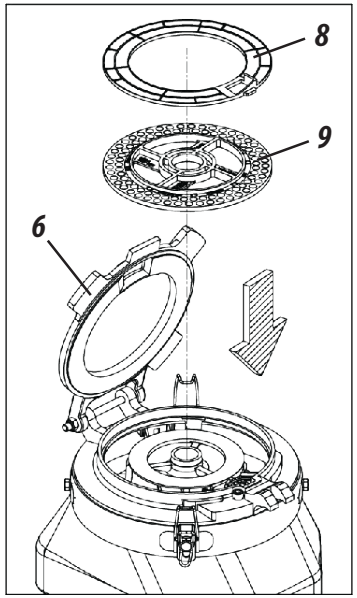

Detail "G"

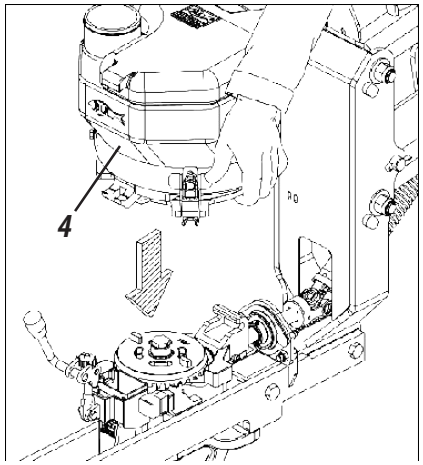

Detail "I"

6th Step: Conclude by replacing the seeding box (4) on the row and latch it (3), fastening the lever (1) using the pin (2), **as shown in details "I" and "J".**

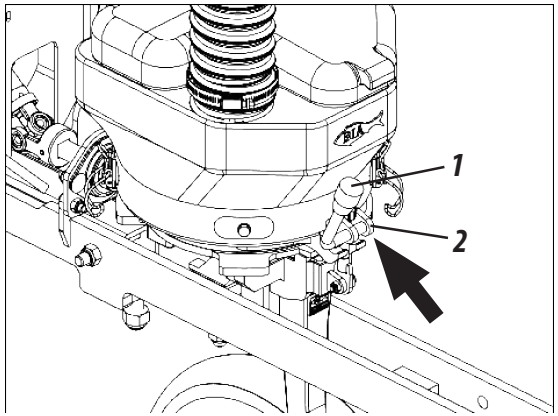

SEED SPREADING SYSTEM

SEED SPREADING SYSTEM

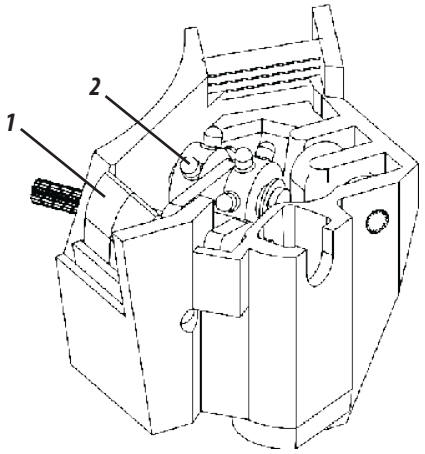

Seed Dispensing Box

ATTENTION

Before changing the disc and ring to seed with a new seed, verify the conditions of the trigger (1) and the rosette (2), as the wear of these items interfere with the dispensing. Whenever it is necessary replace them.

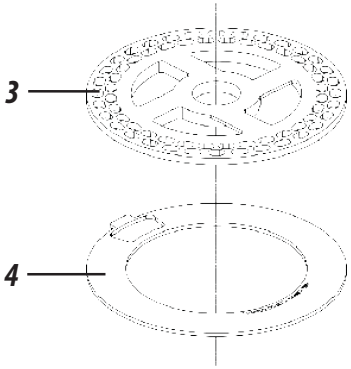

IMPORTANT

Change the spreading discs (3) and spacer rings (4), when they are excessively worn.

SEED DISPENSER ROSETTE

The seed spreading box are shipped from the factory with the trigger assembled with double rosettes (1), for double row discs (2).

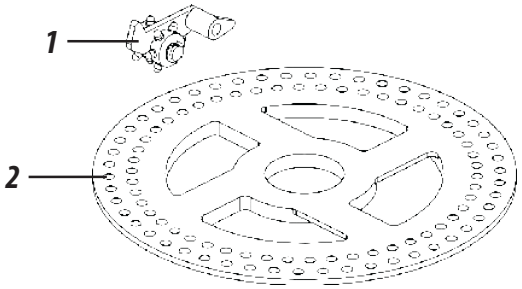

For single row discs (1), proceed to change the trigger for double rosettes to the single rosette (2), **as shown in the following figure.**

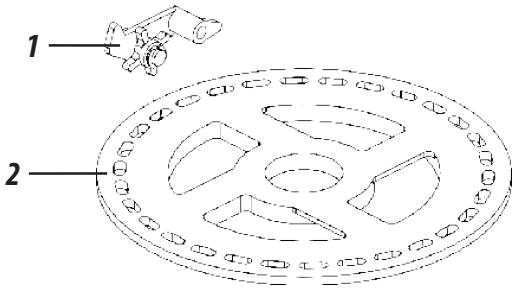

IMPORTANT

The seed spreader box is equipped with triggers and rosettes that can be cleaned internally, at least once daily for untreated seeds and twice daily for treated seeds.

CHANGING DOUBLE ROSETTES TO A SINGLE

To change the trigger with double rosettes, for the trigger with single rosette, proceed as follows:

1- Remove the pin (1), the trigger with double rosettes (2), place the spring (3) in the fitting and insert the trigger with the single rosette (4) in the spreader box (5) and latch for the pin (1).

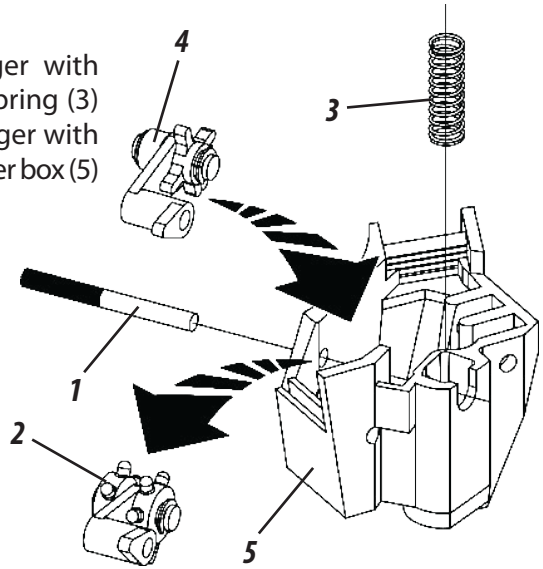

SEED SPREADING DISCS AND RINGS (TABLES 03/04/05)

The **SP TOPOGRAFIC** seeder is shipped from the factory with some standard discs and rings and other optional models can be purchased individually.

Crop	Code	Standards Discs
Corn	60200717980	Disc w/ 28 holes ø 11,5mm (ø189 x 4,00mm) **Rampflow**
	60200717999	Disc w/ 28 holes ø 12,5mm (ø189 x 4,00mm) **Rampflow**
	60200718006	Disc w/ 28 holes ø 13,5mm (ø189 x 4,00mm) **Rampflow**
Sorghum	52200101049	Disc w/ 100 holes ø 5mm (ø35,5 x 189 x 3,00mm) w/ ring
Soybean	60200718014	Disc w/ 90 holes ø 8mm (ø35,1 x 189 x 4,50mm) **Rampflow**
	60200718022	Disc w/ 90 holes ø 9mm (ø35,1 x 189 x 5,50mm) **Rampflow**
Disc	52200101316	Blunt Disc (ø35,5 x 189 x 5,50mm) w/ ring

Tables 03

Crop	Code	Standards Rings
Corn	60200158094	Corn Ring Mod. U 4mm w/ recess 1mm **Rampflow**
	60200158140	Corn Ring Mod. U 4mm w/ recess 2mm **Rampflow**
	60200158159	Corn Ring Mod. U 4mm Flat **Rampflow**
Soybean	60200158108	Soybean Ring Mod. U 4mm Flat **Rampflow**
	60200158116	Soybean Ring Mod. U 3mm Flat **Rampflow**
	60200158124	Soybean Ring Mod. U 3mm c/ Recess 0,8mm **Rampflow**
	60200158132	Soybean Ring Mod. U 4mm c/ Recess 1mm **Rampflow**

Tables 04

Crop	Code	Optional Discs and Rings
Corn	60200718162	Disc w/ 28 holes ø 10,5mm (ø189 x 4,00mm) **Rampflow**
	60200718170	Disc w/ 28 holes ø 11mm (ø189 x 4,00mm) **Rampflow**
	60200718189	Disc w/ 28 holes ø 12mm (ø189 x 4,00mm) **Rampflow**
	60200718197	Disc w/ 28 holes ø 13mm (ø189 x 4,00mm) **Rampflow**
Sorghum	52200101200	Disc w/ 50 holes ø 5mm (ø35,5 x 189 x 3,00mm) w/ ring
Bean	60200700905	Disc w/ 34 holes ø 10,5 x 20mm (ø35,5 x 189 x 8,50mm) w/ ring
	52200101219	Disc w/ 64 holes ø 8 x 12,5mm (ø35,5 x 189 x 5,50mm) w/ ring
Sunflower	52200101235	Disc w/ 30 holes ø 5,5 x 13,4mm (ø35,5 x 189 x 4,50mm) w/ ring
Soybean	60200718200	Disc w/ 90 holes ø 7,3mm (ø35,1 x 189 x 4,50mm) **Rampflow**
	60200758167	Soybean Ring Mod. U 4mm Flat **Rampflow**
Canola / Sorghum	52200101278	Disc w/ 76 holes ø 5mm (ø35,5 x 186 x 3,00mm) w/ ring
Cotton	52200101286	Disc w/ 64 holes ø 7 x 12mm (ø35,5 x 189 x 5,50mm) w/ ring
Rice	52200101294	Disc w/ 40 holes ø 6,5 x 19,5mm (ø35,5 x 189 x 5,50mm) w/ ring
Blunt	52200101324	Blunt Disc (ø35,5 x 189 x 4,00mm) w/ ring
	60200700891	Blunt Disc (ø35,5 x 189 x 8,00mm) w/ ring

Tables 05

SEED SPREADING SYSTEM

USING POWDERED GRAPHITE OR INDUSTRIAL TALCUM POWDER (TABLE 06)

Graphite powder or industrial talcum powder can be mixed with the seeds for facilitating spreading and increasing the useful lifetime of the spreading mechanism.

Amount of graphite per kilo of seeds			
Seeders with spreading system type:	*Seeds previously treated with insecticide*		
	Small round	*Large round*	*Flat*
Horizontal Discs	04 grams	02 grams	04 grams

Table 06

IMPORTANT

Graphite must not be mixed before seeds are treated.
Graphite must not be mixed with insecticide being applied.
For untreated seeds, use only half of the graphite cited in the table on the left.

SPEED BOX

The seeders equipped with the Speed Box system (1), that activate the spreading system with simple adjustments, assure the change of quick rotations. Proceed as follows to make adjustments of seeds:

1- Select the desired amount on the tables and verify the corresponding combinations of the levers (2). **Example:** Position **F2** on the table, indicates that the levers with letters must be in the **"F"** (fertilizer) position and the lever with numbers must be in position **"2".**

2- Remove the latch (3) to move the levers, pull the knob (4), and then adjust the levers as stated in the above example. When the combination is finished, return the knob (4) and then replace the latch (3).

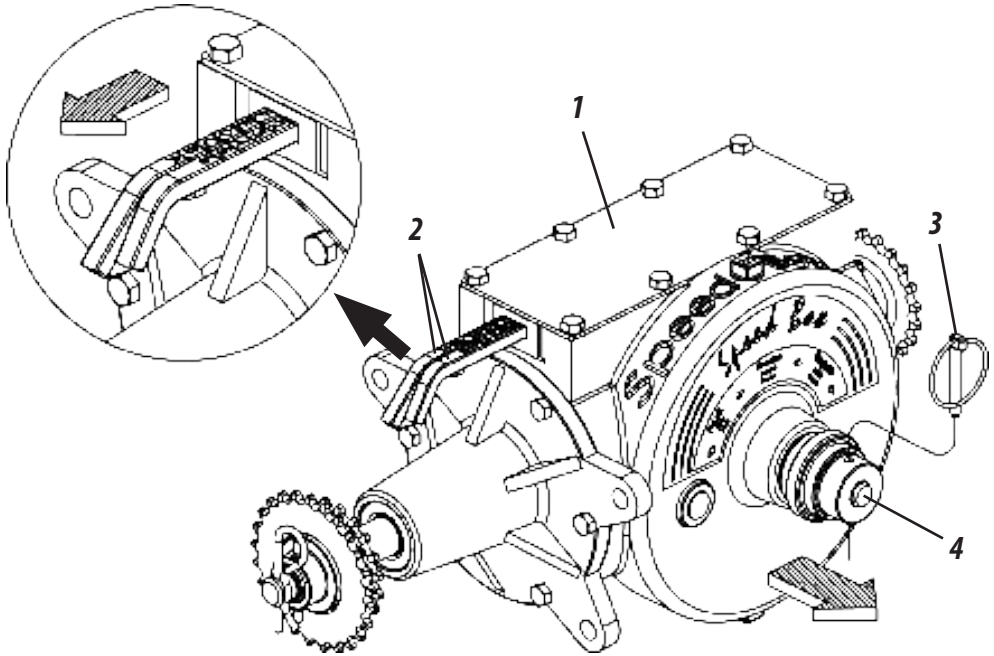

SEED SPREADING ADJUSTMENT

Seed adjustments are done using the Speed Box (1). Invert the chain from drive **"A"** gear to driven **"B"** gear. Proceed as follows to invert the chain:

1- First turn the chain stretcher (2), relieving the tightness from the chain (3).

2- After invert the chain (3) as needed for the working conditions.

3- Following that, release the chain stretcher (2) let it go back, and then the chain is tightened again (3).

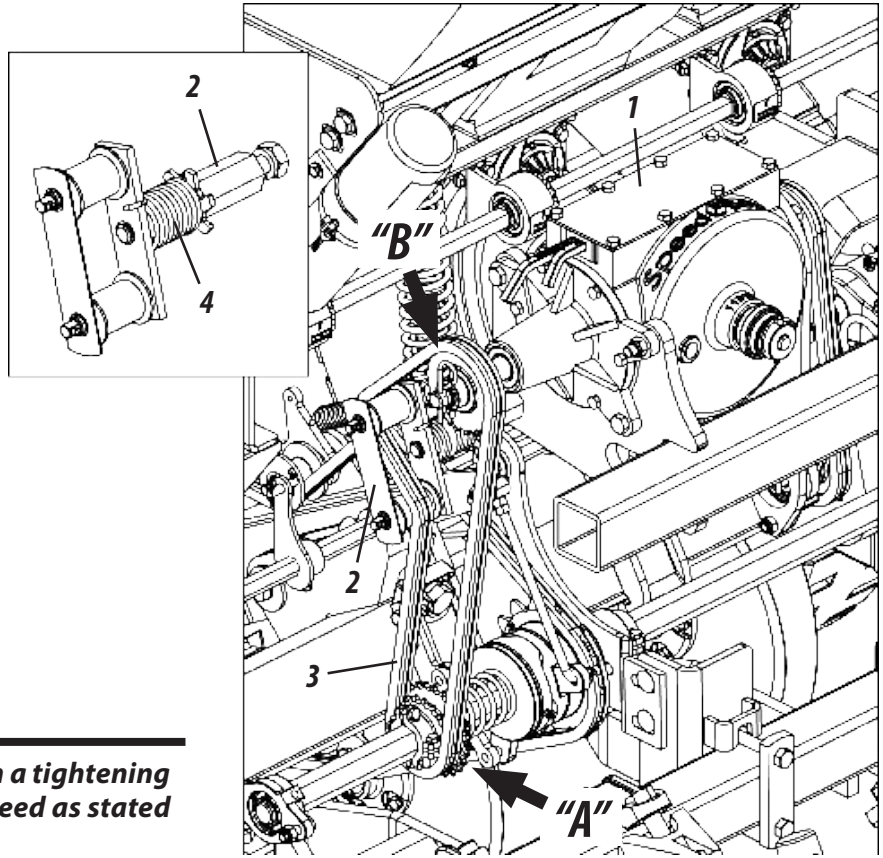

IMPORTANT

Verify the tightness of the chain after changing the gears. The stretcher (2) is equipped on a tightening spring (4) for increased flexibility. If necessary to increase pressure on the stretcher, proceed as stated in the instructions on page 73.

SEED SPREADING TABLE (TABLES 07/08)

The seed spreading table is based on the number of holes in the spreading disc, by changing the gears and the number of seeds being spread.

ATTENTION ***If it is necessary to check the seeds being spread in the field, open the furrow and count the first seed found in 5 linear meters. Then, take that result and divide that by 5 linear meters and you will get the result in linear meters.***

SEED SPREADING SYSTEM

Table 07

Seed Spreading Table based on linear meter - SP Topografic																	
Output gear from the Sprocket Axle (Z3)								20	Input gear to Speed Box (Z4)								25
Combination	Number of Holes in the Seed Spreading Disc																
	17	18	19	20	24	26	28	30	38	40	48	50	62	64	72	90	100
F - 1	1,3	1,4	1,5	1,5	1,9	2,0	2,2	2,3	2,9	3,1	3,7	3,9	4,8	4,9	5,6	7,0	7,7
F - 2	1,5	1,6	1,7	1,7	2,1	2,3	2,4	2,6	3,3	3,5	4,2	4,3	5,4	5,6	6,3	7,8	8,7
E - 1	1,6	1,7	1,8	1,9	2,3	2,5	2,7	2,9	3,7	3,9	4,6	4,8	6,0	6,2	7,0	8,7	9,7
F - 3	1,7	1,8	1,9	2,0	2,4	2,6	2,8	3,0	3,8	4,0	4,8	5,0	6,2	6,4	7,2	8,9	9,9
E - 2	1,8	2,0	2,1	2,2	2,6	2,8	3,0	3,3	4,1	4,3	5,2	5,4	6,7	7,0	7,8	9,8	10,9
D - 1	2,0	2,1	2,2	2,3	2,8	3,0	3,2	3,5	4,4	4,6	5,6	5,8	7,2	7,4	8,3	10,4	11,6
F - 4	2,0	2,1	2,2	2,3	2,8	3,0	3,2	3,5	4,4	4,6	5,6	5,8	7,2	7,4	8,3	10,4	11,6
E - 3	2,1	2,2	2,4	2,5	3,0	3,2	3,5	3,7	4,7	5,0	6,0	6,2	7,7	7,9	8,9	11,2	12,4
D - 2	2,2	2,3	2,5	2,6	3,1	3,4	3,7	3,9	5,0	5,2	6,3	6,5	8,1	8,3	9,4	11,7	13,0
C - 1	2,3	2,4	2,6	2,7	3,2	3,5	3,8	4,1	5,1	5,4	6,5	6,8	8,4	8,7	9,7	12,2	13,5
F - 5	2,4	2,5	2,6	2,8	3,3	3,6	3,9	4,2	5,3	5,6	6,7	7,0	8,6	8,9	10,0	12,5	13,9
E - 4	2,5	2,6	2,8	2,9	3,5	3,8	4,1	4,3	5,5	5,8	7,0	7,2	9,0	9,3	10,4	13,0	14,5
D - 3	2,5	2,7	2,8	3,0	3,6	3,9	4,2	4,5	5,7	6,0	7,2	7,5	9,2	9,5	10,7	13,4	14,9
C - 2	2,6	2,7	2,9	3,0	3,7	4,0	4,3	4,6	5,8	6,1	7,3	7,6	9,4	9,7	11,0	13,7	15,2
B - 1	2,6	2,8	2,9	3,1	3,7	4,0	4,3	4,6	5,9	6,2	7,4	7,7	9,6	9,9	11,1	13,9	15,5
A - 1	3,0	3,1	3,3	3,5	4,2	4,5	4,9	5,2	6,6	7,0	8,3	8,7	10,8	11,1	12,5	15,6	17,4
A - 2	3,3	3,5	3,7	3,9	4,7	5,1	5,5	5,9	7,4	7,8	9,4	9,8	12,1	12,5	14,1	17,6	19,6
B - 3	3,4	3,6	3,8	4,0	4,8	5,2	5,6	6,0	7,6	7,9	9,5	9,9	12,3	12,7	14,3	17,9	19,9
C - 4	3,4	3,7	3,9	4,1	4,9	5,3	5,7	6,1	7,7	8,1	9,7	10,1	12,6	13,0	14,6	18,3	20,3
D - 5	3,5	3,8	4,0	4,2	5,0	5,4	5,8	6,3	7,9	8,3	10,0	10,4	12,9	13,4	15,0	18,8	20,9
E - 6	3,7	3,9	4,1	4,3	5,2	5,7	6,1	6,5	8,3	8,7	10,4	10,9	13,5	13,9	15,6	19,6	21,7
A - 3	3,8	4,0	4,2	4,5	5,4	5,8	6,3	6,7	8,5	8,9	10,7	11,2	13,9	14,3	16,1	20,1	22,4
B - 4	3,9	4,2	4,4	4,6	5,6	6,0	6,5	7,0	8,8	9,3	11,1	11,6	14,4	14,8	16,7	20,9	23,2
C - 5	4,1	4,4	4,6	4,9	5,8	6,3	6,8	7,3	9,2	9,7	11,7	12,2	15,1	15,6	17,5	21,9	24,3
D - 6	4,4	4,7	5,0	5,2	6,3	6,8	7,3	7,8	9,9	10,4	12,5	13,0	16,2	16,7	18,8	23,5	26,1
A - 4	4,4	4,7	5,0	5,2	6,3	6,8	7,3	7,8	9,9	10,4	12,5	13,0	16,2	16,7	18,8	23,5	26,1
B - 5	4,7	5,0	5,3	5,6	6,7	7,2	7,8	8,3	10,6	11,1	13,4	13,9	17,2	17,8	20,0	25,0	27,8
C - 6	5,2	5,5	5,8	6,1	7,3	7,9	8,5	9,1	11,6	12,2	14,6	15,2	18,9	19,5	21,9	27,4	30,4
A - 5	5,3	5,6	5,9	6,3	7,5	8,1	8,8	9,4	11,9	12,5	15,0	15,6	19,4	20,0	22,5	28,2	31,3
B - 6	5,9	6,3	6,6	7,0	8,3	9,0	9,7	10,4	13,2	13,9	16,7	17,4	21,6	22,3	25,0	31,3	34,8
A - 6	6,6	7,0	7,4	7,8	9,4	10,2	11,0	11,7	14,9	15,6	18,8	19,6	24,3	25,0	28,2	35,2	39,1

Seed Spreading Table based on linear meter - SP Topografic																	
Output gear from the Sprocket Axle (Z3)								25	Input gear to Speed Box (Z4)								20
Combination	Number of Holes in the Seed Spreading Disc																
	17	18	19	20	24	26	28	30	38	40	48	50	62	64	72	90	100
F - 1	2,1	2,2	2,3	2,4	2,9	3,1	3,4	3,6	4,6	4,8	5,8	6,0	7,5	7,7	8,7	10,9	12,1
F - 2	2,3	2,4	2,6	2,7	3,3	3,5	3,8	4,1	5,2	5,4	6,5	6,8	8,4	8,7	9,8	12,2	13,6
E - 1	2,6	2,7	2,9	3,0	3,6	3,9	4,2	4,5	5,7	6,0	7,2	7,5	9,4	9,7	10,9	13,6	15,1
F - 3	2,6	2,8	2,9	3,1	3,7	4,0	4,3	4,7	5,9	6,2	7,5	7,8	9,6	9,9	11,2	14,0	15,5
E - 2	2,9	3,1	3,2	3,4	4,1	4,4	4,8	5,1	6,5	6,8	8,1	8,5	10,5	10,9	12,2	15,3	17,0
D - 1	3,1	3,3	3,4	3,6	4,3	4,7	5,1	5,4	6,9	7,2	8,7	9,1	11,2	11,6	13,0	16,3	18,1
F - 4	3,1	3,3	3,4	3,6	4,3	4,7	5,1	5,4	6,9	7,2	8,7	9,1	11,2	11,6	13,0	16,3	18,1
E - 3	3,3	3,5	3,7	3,9	4,7	5,0	5,4	5,8	7,4	7,8	9,3	9,7	12,0	12,4	14,0	17,5	19,4
D - 2	3,5	3,7	3,9	4,1	4,9	5,3	5,7	6,1	7,7	8,1	9,8	10,2	12,6	13,0	14,7	18,3	20,4
C - 1	3,6	3,8	4,0	4,2	5,1	5,5	5,9	6,3	8,0	8,5	10,1	10,6	13,1	13,5	15,2	19,0	21,1
F - 5	3,7	3,9	4,1	4,3	5,2	5,7	6,1	6,5	8,3	8,7	10,4	10,9	13,5	13,9	15,6	19,6	21,7
E - 4	3,8	4,1	4,3	4,5	5,4	5,9	6,3	6,8	8,6	9,1	10,9	11,3	14,0	14,5	16,3	20,4	22,6
D - 3	4,0	4,2	4,4	4,7	5,6	6,1	6,5	7,0	8,8	9,3	11,2	11,6	14,4	14,9	16,8	21,0	23,3
C - 2	4,0	4,3	4,5	4,8	5,7	6,2	6,7	7,1	9,0	9,5	11,4	11,9	14,7	15,2	17,1	21,4	23,8
B - 1	4,1	4,3	4,6	4,8	5,8	6,3	6,8	7,2	9,2	9,7	11,6	12,1	15,0	15,5	17,4	21,7	24,1
A - 1	4,6	4,9	5,2	5,4	6,5	7,1	7,6	8,1	10,3	10,9	13,0	13,6	16,8	17,4	19,6	24,4	27,2
A - 2	5,2	5,5	5,8	6,1	7,3	7,9	8,6	9,2	11,6	12,2	14,7	15,3	18,9	19,6	22,0	27,5	30,6
B - 3	5,3	5,6	5,9	6,2	7,5	8,1	8,7	9,3	11,8	12,4	14,9	15,5	19,2	19,9	22,4	27,9	31,0
C - 4	5,4	5,7	6,0	6,3	7,6	8,2	8,9	9,5	12,0	12,7	15,2	15,8	19,6	20,3	22,8	28,5	31,7
D - 5	5,5	5,9	6,2	6,5	7,8	8,5	9,1	9,8	12,4	13,0	15,6	16,3	20,2	20,9	23,5	29,3	32,6
E - 6	5,8	6,1	6,5	6,8	8,1	8,8	9,5	10,2	12,9	13,6	16,3	17,0	21,1	21,7	24,4	30,6	34,0
A - 3	5,9	6,3	6,6	7,0	8,4	9,1	9,8	10,5	13,3	14,0	16,8	17,5	21,7	22,4	25,1	31,4	34,9
B - 4	6,2	6,5	6,9	7,2	8,7	9,4	10,1	10,9	13,8	14,5	17,4	18,1	22,5	23,2	26,1	32,6	36,2
C - 5	6,5	6,8	7,2	7,6	9,1	9,9	10,6	11,4	14,5	15,2	18,3	19,0	23,6	24,3	27,4	34,2	38,0
D - 6	6,9	7,3	7,7	8,1	9,8	10,6	11,4	12,2	15,5	16,3	19,6	20,4	25,3	26,1	29,3	36,7	40,7
A - 4	6,9	7,3	7,7	8,1	9,8	10,6	11,4	12,2	15,5	16,3	19,6	20,4	25,3	26,1	29,3	36,7	40,7
B - 5	7,4	7,8	8,3	8,7	10,4	11,3	12,2	13,0	16,5	17,4	20,9	21,7	26,9	27,8	31,3	39,1	43,5
C - 6	8,1	8,6	9,0	9,5	11,4	12,4	13,3	14,3	18,1	19,0	22,8	23,8	29,5	30,4	34,2	42,8	47,5
A - 5	8,3	8,8	9,3	9,8	11,7	12,7	13,7	14,7	18,6	19,6	23,5	24,4	30,3	31,3	35,2	44,0	48,9
B - 6	9,2	9,8	10,3	10,9	13,0	14,1	15,2	16,3	20,6	21,7	26,1	27,2	33,7	34,8	39,1	48,9	54,3
A - 6	10,4	11,0	11,6	12,2	14,7	15,9	17,1	18,3	23,2	24,4	29,3	30,6	37,9	39,1	44,0	55,0	61,1

Table 08

FERTILIZER SPREADING SYSTEM

FERTILIZER CONDUCTOR - FERTISYSTEM

Fit the angled nozzles (1) on the discharge from the fertisystem conductor for conducting the fertilizer to the soil, using the clamps (3). Then place the hose (4) in the angled nozzle (1) through the clamps (5).

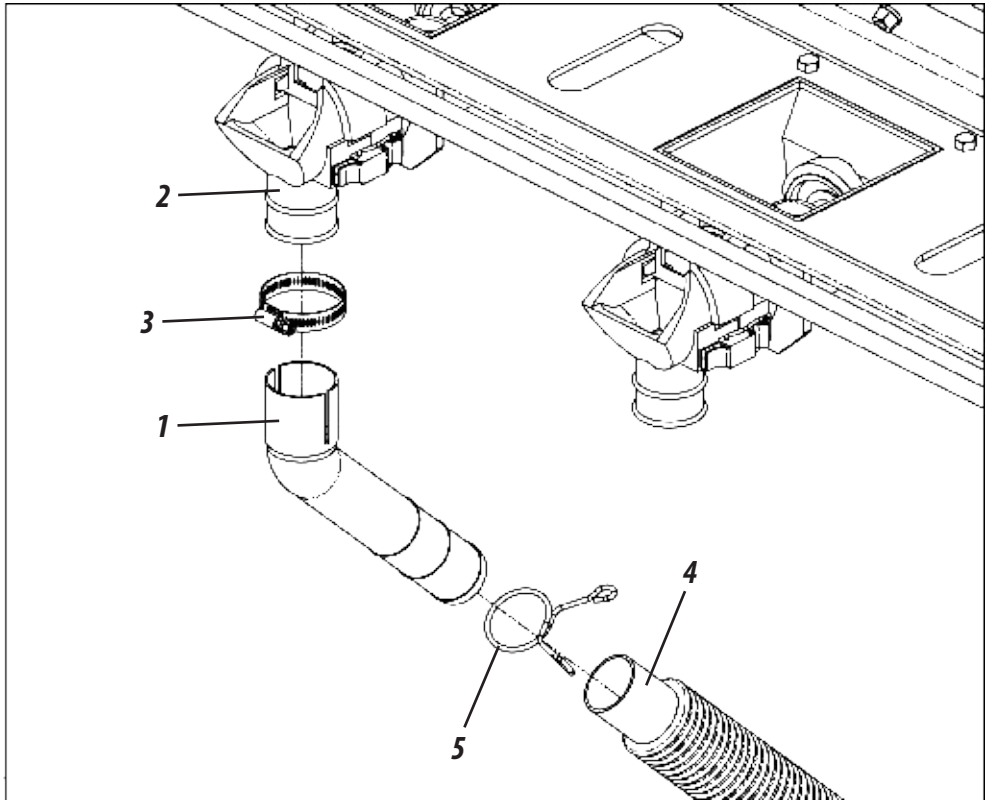

The fertisystem spreading system is equipped with safety discharges to assure performance of the system to prevent damaging it. In case of blockage of the hose and the dispenser, proceed by cleaning the dispenser until the end of the hose near the furrow tine or double disc, as the blockage of the system can be caused by roots, pieces of plastic and other objects.

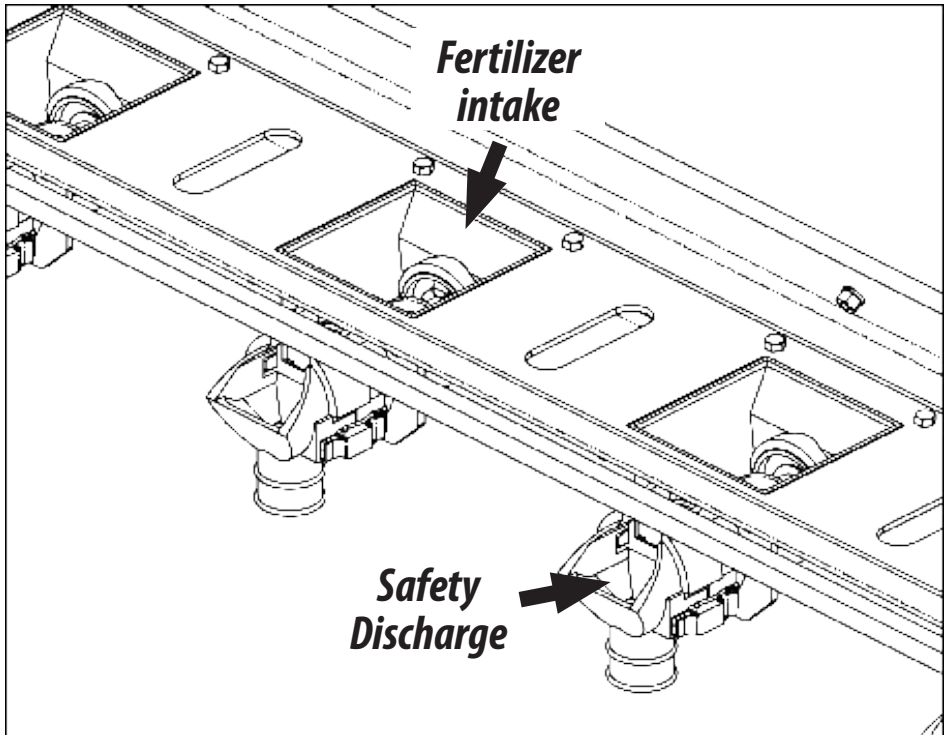

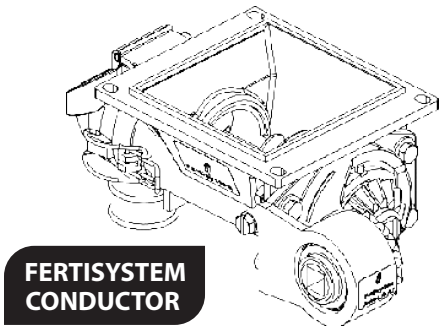

FERTISYSTEM CONDUCTOR

ATTENTION

Verify the spreaders and hoses daily and proceed in cleaning their discharges. When the fertilizer is not pure or damp, proceed in cleaning more frequently.

SPEED BOX

Seeders are equipped with the Speed Box system (1) that activates the spreading system by performing simple adjustments, assuring quick changes in rotation. Proceed in adjusting the seed flow as follows:

1- Select the desired amount from the tables and verify the corresponding lever combination (2). **Example:** Position **F2** on the table, indicates that the letter lever must be in the **"F"** (Fertilizer) position and the number lever must be in the **"2"** position.

2- Remove the latch (3) to move the levers, pull the knob (4), and then adjust the levers according to the example above. After concluding the combination, press the knob back (4) and replace the latch (3).

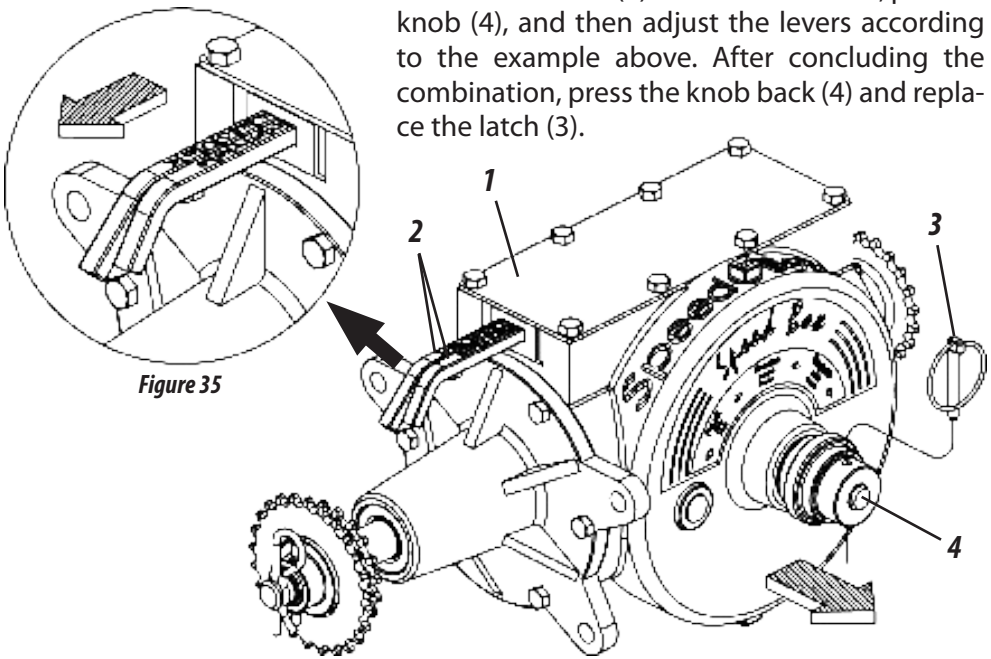

Figure 35

ADJUSTMENT FOR SPREADING FERTILIZER

The adjustment of seeds is done by using the Speed Box (1). In order to obtain more adjustment, Invert the chain from drive **"A"** gear to driven **"B".** To invert the chain proceed as follows:

1- First turn the chain stretcher (2), relieving the tightness from the chain (3).

2- After invert the chain (3) as needed for the working conditions.

3- Following that, release the chain stretcher (2) let it go back, and then the chain is tightened again (3).

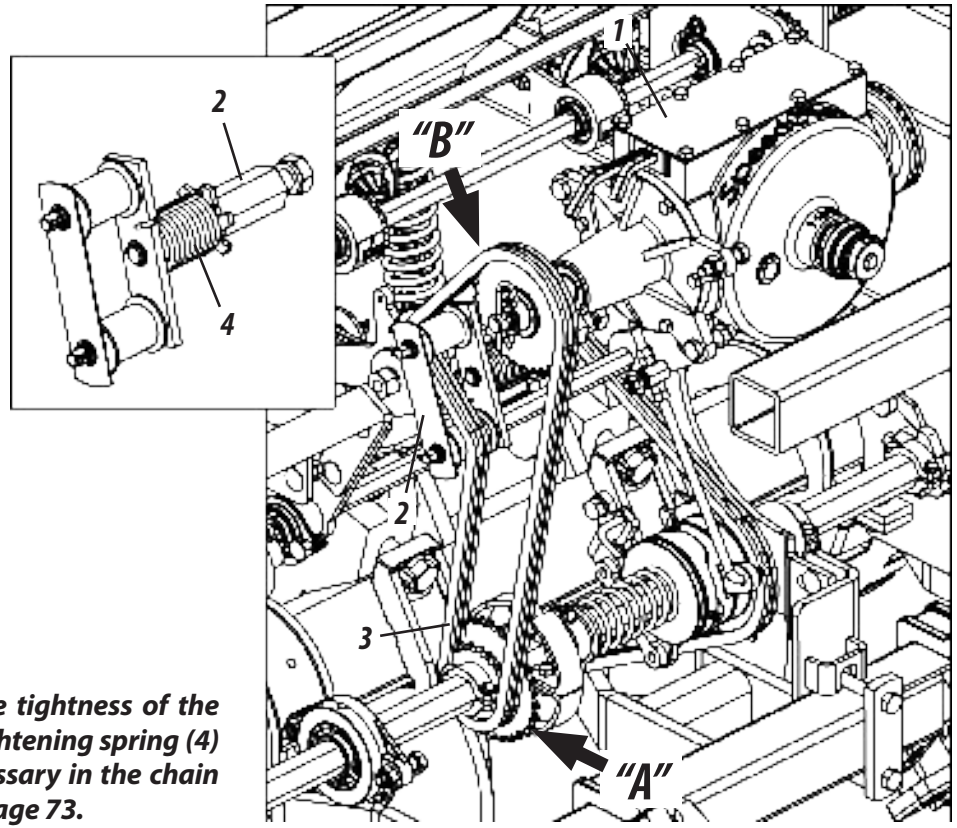

IMPORTANT

After proceeding in changing the gears, verify the tightness of the chain. The chain stretcher (2) is equipped with a tightening spring (4) for flexibility of the same. If more pressure is necessary in the chain stretcher, proceed as stated in the instructions on page 73.

FERTILIZER SPREADING SYSTEM

FERTILIZER SPREADING SYSTEM

Note: Spring with 2" pitch

Table 09

Fertilizer Spreading Table - SP Topografic															
Ratchet hex axle gear				20		Speed Box intake gear								31	
Combination	Grams 50 m	415	430	450	500	550	600	650	700	750	800	850	900	950	1000
F - 1	313	151	146	139	125	114	104	96	89	83	78	74	70	66	63
F - 2	352	170	164	157	141	128	117	108	101	94	88	83	78	74	70
E - 1	391	189	182	174	157	142	130	120	112	104	98	92	87	82	78
F - 3	402	194	187	179	161	146	134	124	115	107	101	95	89	85	80
E - 2	440	212	205	196	176	160	147	135	126	117	110	104	98	93	88
D - 1	470	226	218	209	188	171	157	144	134	125	117	110	104	99	94
F - 4	470	226	218	209	188	171	157	144	134	125	117	110	104	99	94
E - 3	503	242	234	224	201	183	168	155	144	134	126	118	112	106	101
D - 2	528	255	246	235	211	192	176	163	151	141	132	124	117	111	106
C - 1	548	264	255	243	219	199	183	169	157	146	137	129	122	115	110
F - 5	563	272	262	250	225	205	188	173	161	150	141	133	125	119	113
E - 4	587	283	273	261	235	213	196	181	168	157	147	138	130	124	117
D - 3	604	291	281	268	241	220	201	186	172	161	151	142	134	127	121
C - 2	616	297	287	274	247	224	205	190	176	164	154	145	137	130	123
B - 1	626	302	291	278	250	228	209	193	179	167	157	147	139	132	125
A - 1	704	339	328	313	282	256	235	217	201	188	176	166	157	148	141
A - 2	792	382	369	352	317	288	264	244	226	211	198	186	176	167	158
B - 3	805	388	374	358	322	293	268	248	230	215	201	189	179	169	161
C - 4	822	396	382	365	329	299	274	253	235	219	205	193	183	173	164
D - 5	845	407	393	376	338	307	282	260	241	225	211	199	188	178	169
E - 6	880	424	409	391	352	320	293	271	252	235	220	207	196	185	176
A - 3	906	436	421	402	362	329	302	279	259	241	226	213	201	191	181
B - 4	939	453	437	417	376	341	313	289	268	250	235	221	209	198	188
C - 5	986	475	459	438	394	359	329	303	282	263	247	232	219	208	197
D - 6	1056	509	491	470	423	384	352	325	302	282	264	249	235	222	211
A - 4	1056	509	491	470	423	384	352	325	302	282	264	249	235	222	211
B - 5	1127	543	524	501	451	410	376	347	322	301	282	265	250	237	225
C - 6	1233	594	573	548	493	448	411	379	352	329	308	290	274	259	247
A - 5	1268	611	590	563	507	461	423	390	362	338	317	298	282	267	254
B - 6	1409	679	655	626	563	512	470	433	402	376	352	331	313	297	282
A - 6	1585	764	737	704	634	576	528	488	453	423	396	373	352	334	317

Fertilizer Spreading Table - SP Topografic															
Ratchet hex axle gear				31		Speed Box intake gear								20	
Combination	Grams 50 m	415	430	450	500	550	600	650	700	750	800	850	900	950	1000
F - 1	752	362	350	334	301	273	251	231	215	201	188	177	167	158	150
F - 2	846	408	394	376	338	308	282	260	242	226	212	199	188	178	169
E - 1	940	453	437	418	376	342	313	289	269	251	235	221	209	198	188
F - 3	967	466	450	430	387	352	322	298	276	258	242	228	215	204	193
E - 2	1058	510	492	470	423	385	353	325	302	282	264	249	235	223	212
D - 1	1128	544	525	501	451	410	376	347	322	301	282	265	251	237	226
F - 4	1128	544	525	501	451	410	376	347	322	301	282	265	251	237	226
E - 3	1209	582	562	537	483	440	403	372	345	322	302	284	269	254	242
D - 2	1269	612	590	564	508	461	423	390	363	338	317	299	282	267	254
C - 1	1316	634	612	585	526	479	439	405	376	351	329	310	292	277	263
F - 5	1354	652	630	602	541	492	451	417	387	361	338	319	301	285	271
E - 4	1410	680	656	627	564	513	470	434	403	376	353	332	313	297	282
D - 3	1450	699	675	645	580	527	483	446	414	387	363	341	322	305	290
C - 2	1481	714	689	658	592	538	494	456	423	395	370	348	329	312	296
B - 1	1504	725	700	668	602	547	501	463	430	401	376	354	334	317	301
A - 1	1692	815	787	752	677	615	564	521	483	451	423	398	376	356	338
A - 2	1904	917	885	846	761	692	635	586	544	508	476	448	423	401	381
B - 3	1934	932	899	859	774	703	645	595	553	516	483	455	430	407	387
C - 4	1974	951	918	877	790	718	658	607	564	526	494	465	439	416	395
D - 5	2031	979	944	902	812	738	677	625	580	541	508	478	451	427	406
E - 6	2115	1019	984	940	846	769	705	651	604	564	529	498	470	445	423
A - 3	2176	1048	1012	967	870	791	725	669	622	580	544	512	483	458	435
B - 4	2256	1087	1049	1003	902	820	752	694	645	602	564	531	501	475	451
C - 5	2369	1142	1102	1053	948	861	790	729	677	632	592	557	526	499	474
D - 6	2538	1223	1181	1128	1015	923	846	781	725	677	635	597	564	534	508
A - 4	2538	1223	1181	1128	1015	923	846	781	725	677	635	597	564	534	508
B - 5	2707	1305	1259	1203	1083	985	902	833	774	722	677	637	602	570	541
C - 6	2961	1427	1377	1316	1184	1077	987	911	846	790	740	697	658	623	592
A - 5	3046	1468	1417	1354	1218	1108	1015	937	870	812	761	717	677	641	609
B - 6	3384	1631	1574	1504	1354	1231	1128	1041	967	902	846	796	752	712	677
A - 6	3807	1835	1771	1692	1523	1384	1269	1171	1088	1015	952	896	846	802	761

Note: Spring with 2" pitch

Table 10

CALCULATION

PRACTICAL CALCULATION FOR SPREADING FERTILIZER

Use the following formula to calculate the amount of fertilizer in spacing and different areas then presented on the spreading table, proceed as follows:

1- Define the spacing between rows and the amount of fertilizer to be spread per acre (Aa) or Hectare (Ha).

2- ***Example:*** Seeder with 0.4 meter spacing for spreading 500 kgs of fertilizer per Ha, then use the following formula:

Formula: $X = \frac{E \times Q \times D}{A}$

Formula Data:
E = Spacing between rows (m)
Q = Quantity of fertilizer being spread [kg]
A = Area being fertilizer [m^2]
D = Distance 50 meters (teste)
X = Grams of fertilizer per 50 meters

Solution: $X = \frac{0{,}45 \times 500 \times 50}{10.000}$

$X = 22.50 \times 50 = 1.125$

X = 1.125 grams in 50 meters per row

NOTE

Adjust the seeder for spreading the quantity found in the solution, or closest to the space predetermined for the test to obtain the solution.

ATTENTION

The speed variation while operating, affects the uniform spreading of seeds. When changing the seed batch or fertilizer brand, it is necessary to perform the measurement again. After the first day in working on the crop, verify the adjustments again.

PRACTICAL TEST FOR MEASURING THE QUANTITY FOR SPREADING FERTILIZER AND SEEDS

1- Perform the quantity test being spread in the actual crop location in order to achieve greater precision in fertilizing or seeding, as in each field, there is a specific condition. Proceed as follows:

2- As much as possible, always use the same tractor and operator to perform the work on the crop.

3- Verify and always maintain the correct tire pressure in the seeder **(70 lb/in² for each tire).**

4- Mark the test distance from the table, we have chosen to use 50 linear meters.

5- Fill the seed storage compartment at least halfway full. Travel on an average of 10 meters outside of the test area, so that the fertilizer and seeds fill the dispensers.

6- Seal the discharge from the seed nozzle and place recipients for collecting the fertilizer from the discharge. Move the tractor to the marked area, always at the same speed for planting, from 5 to 7 Km/hr.

7- After traveling the marked space, remove the seal from the seed nozzle and collect them for counting and also collect the fertilizer for weighing the amount collected. If necessary increase or decrease the amount of seeds and fertilizer being spread, verify the table.

8- When the desired amount is reached, while still in the area, move the tractor at the same speed, but let the fertilizer and seeds fall on the ground to after check the uniformity in spreading.

IMPORTANT

We suggest performing a practical test in spreading fertilizer and seeds along a 50 mts course, so that afterwards the results on the fertilizer and seeds can be verified.

FINISHING SYSTEM W/ELECTRIC ACTIVATOR (TABLES 11/12)

The finishing system w/electric activator (1) makes it possible to operate only on one side of the seeder, which means, half of the rows.

Finishing System w/ Electric Activator Elétrico	
Models	**Codes:**
SP TOPOGRAFIC 4500	55280108080
SP TOPOGRAFIC 5500	55280107858
SP TOPOGRAFIC 6500	55280108331
SP TOPOGRAFIC 7500	55280107912
SP TOPOGRAFIC 8500	-
SP TOPOGRAFIC 9500	5528010804-8

Table 11

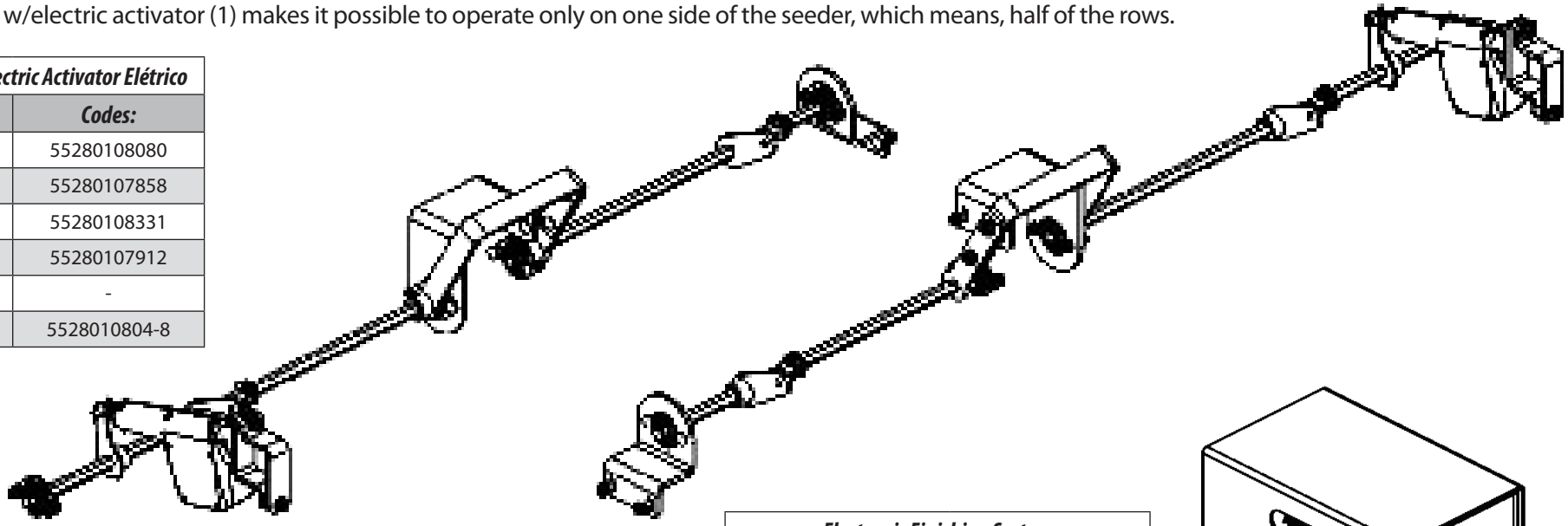

Electronic Finishing System	
Models	**Codes:**
SP TOPOGRAFIC 4500	55280108170
SP TOPOGRAFIC 5500	55280108188
SP TOPOGRAFIC 6500	55280108196
SP TOPOGRAFIC 7500	55280108200
SP TOPOGRAFIC 8500	55280108218
SP TOPOGRAFIC 9500	55280108161

Table 12

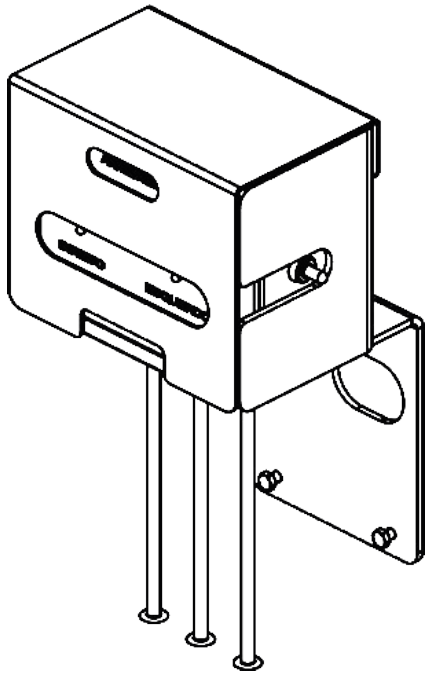

SYSTEM / STORAGE COMPARTMENT

FERTILIZER AND SEED TRANSMISSION AXLE SYSTEM

The **SP TOPOGRAFIC** is equipped with a fertilizer (1) and a seed (2) transmission axle system.

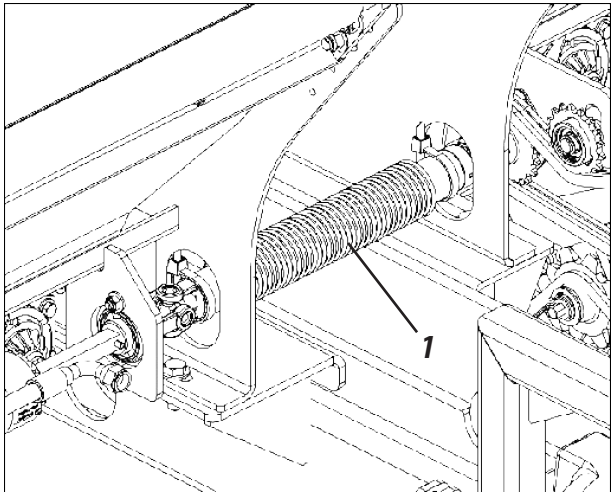

Fertilizer transmission axle

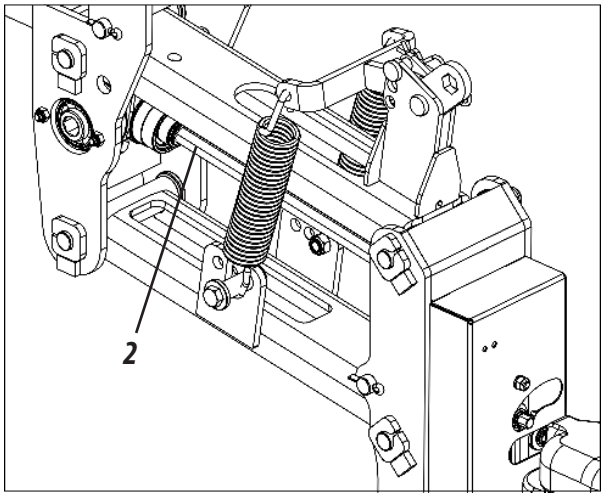

Seed transmission axle

NON-POTABLE WATER STORAGE COMPARTMENT

The **SP TOPOGRAFIC** is equipped with a non-potable (1) water storage compartment that must be used only for general cleaning and never be ingested under any circumstances.

⚠ ATTENTION

Do not drink the water from this storage compartment (1) as it is improper for human consumption "Non-Potable". Ignoring this warning can cause risks to health.

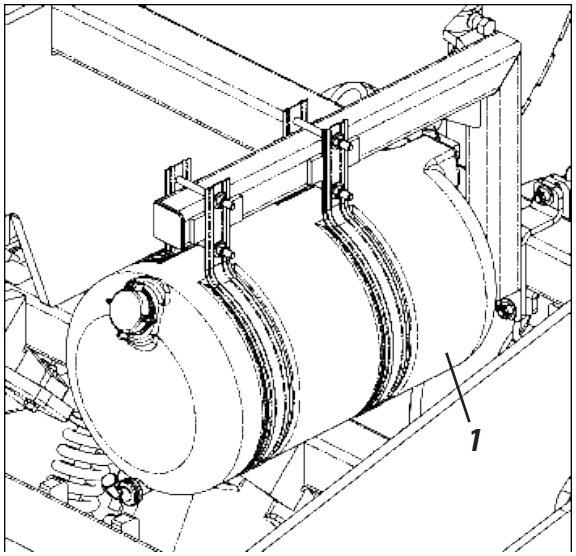

ROW MODELS - STANDARD

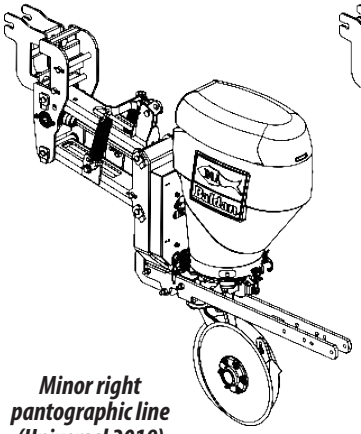

Minor right pantographic line (Universal 2019)

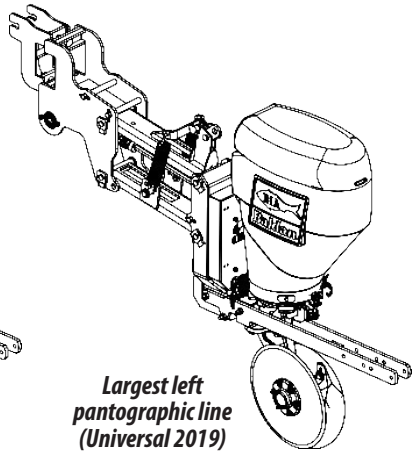

Largest left pantographic line (Universal 2019)

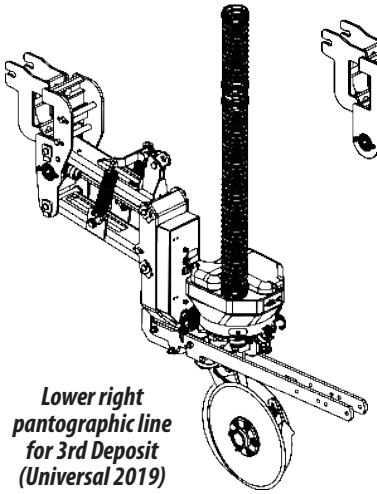

Lower right pantographic line for 3rd Deposit (Universal 2019)

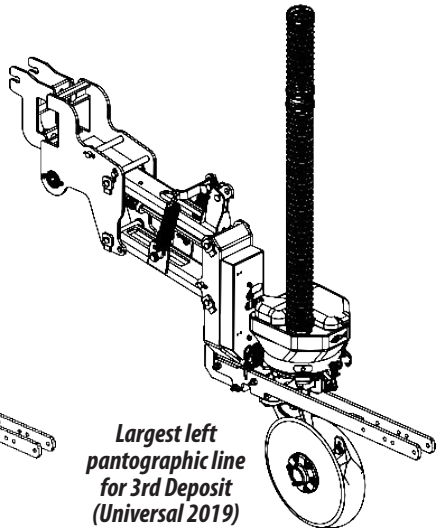

Largest left pantographic line for 3rd Deposit (Universal 2019)

OPTIONAL ROW MODELS

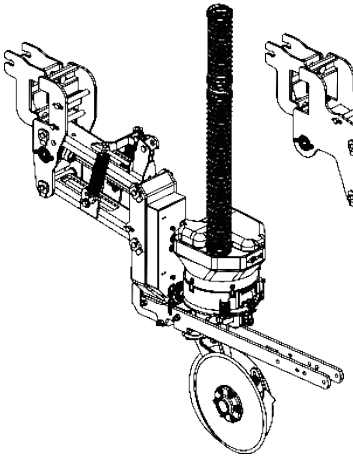

Lower right pantographic line for 3rd Deposit (Universal Titanium)

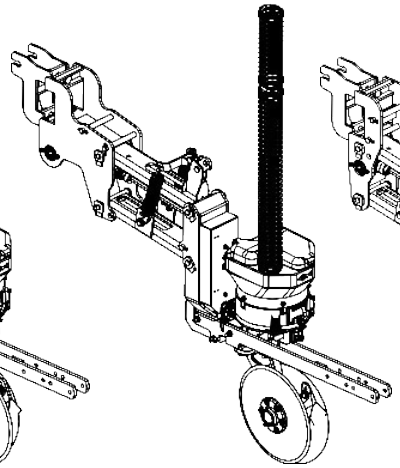

Larlarger left pantographic line for 3rd Deposit (Universal Titanium)

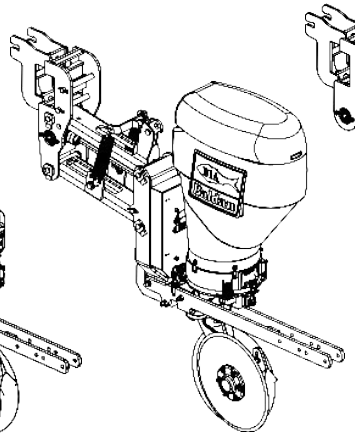

Minor right pantographic line (Titanium System)

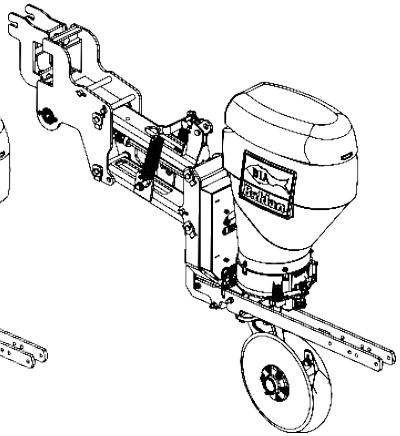

Largest left pantographic line (Titanium System)

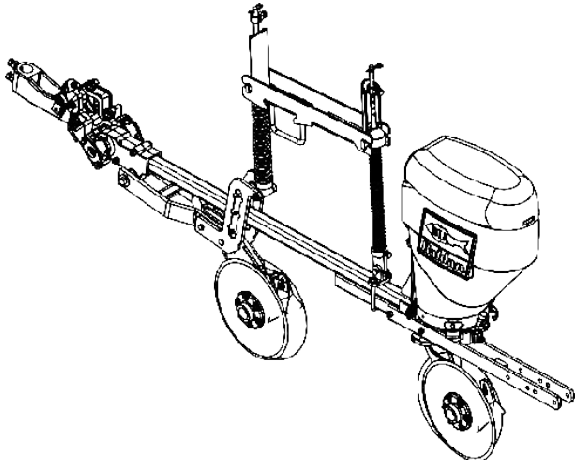

Smaller right line with double fertilizer disc with cuttin disc holder (Universal System 2014)

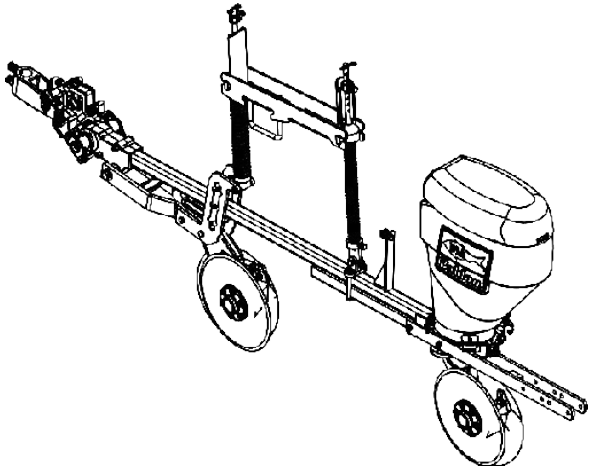

Larger left row with double fertilizer disc with cutting disc holder (Universal System 2014)

SEED ROWS

SEED ROWS

OPTIONAL ROW MODELS - CONTINUATION

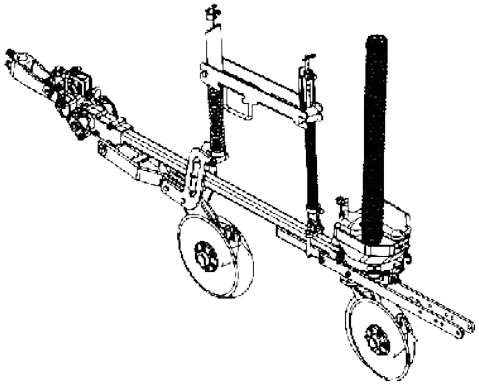

Smaller right line with double fertilizer disc with support for cutting disc for 3rd deposit (Universal System 2014)

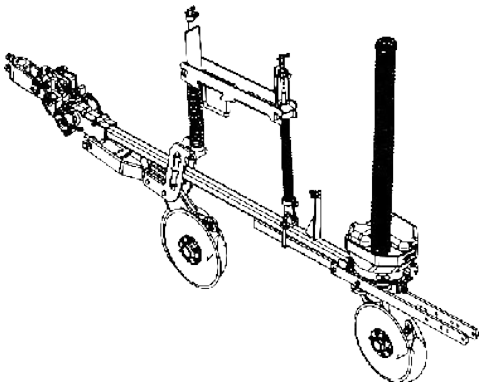

Larger left line with double fertilizer disc with support for cutting disc for 3rd deposit (Universal System 2014)

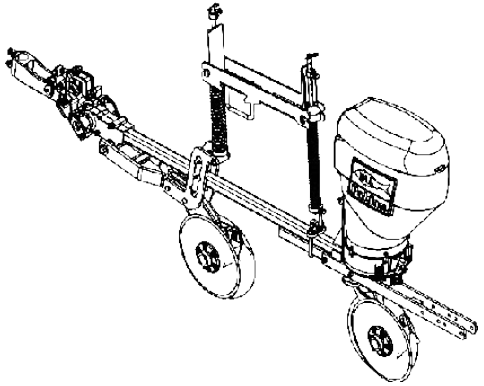

Lower right pivoted line (Titanium System 2014)

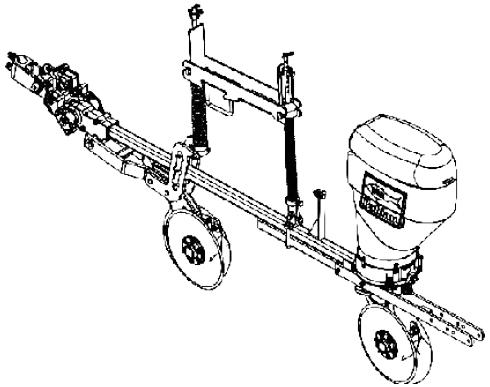

Largest left pivoted line (Titanium System 2014)

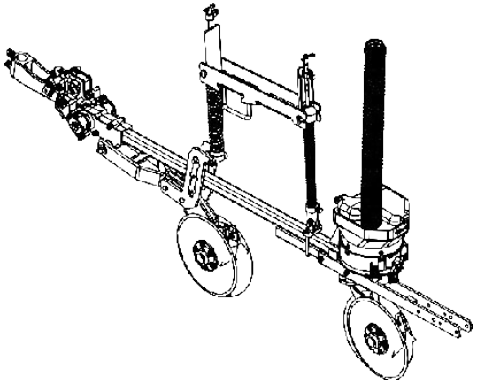

Smaller right line with double fertilizer disc with support for cutting disc for 3rd deposit (Universal Titanium System 2014)

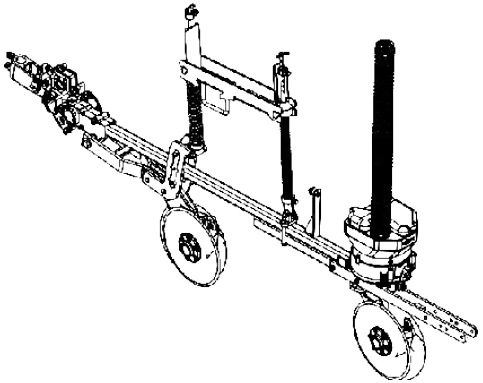

Larger left line with double fertilizer disc with support for cutting disc for 3rd deposit (Universal Titanium System 2014)

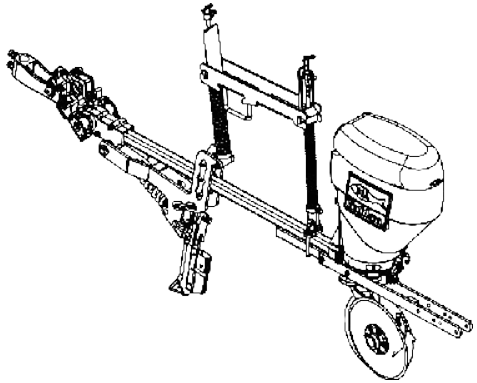

Lower right pivoted line with disarm / reset furrow (Universal System 2014)

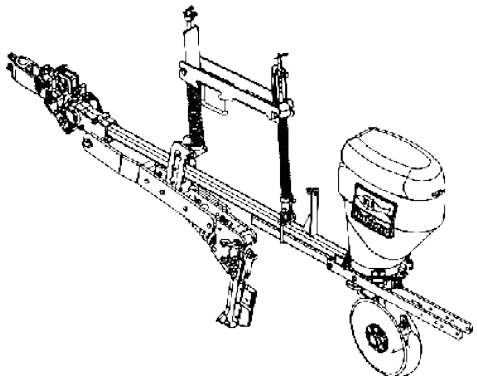

Larger pivoted line left with disarm / reset furrow (Universal System 2014)

OPTIONAL ROW MODELS - CONTINUATION

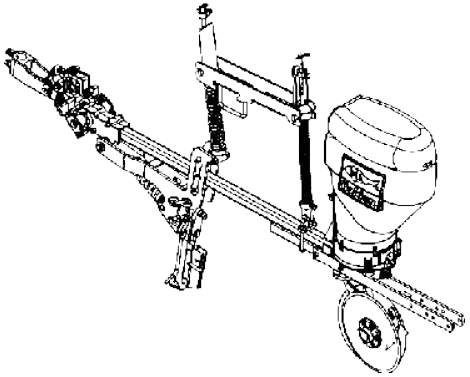

Lower right pivoted line with disarm / reset furrow (Titanium System 2014)

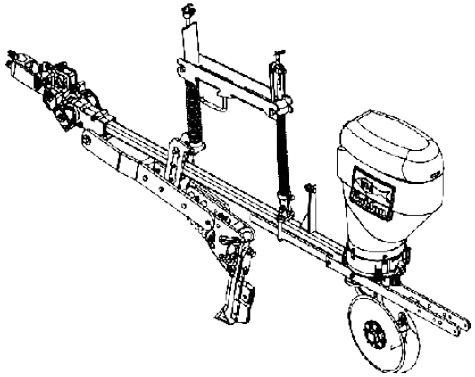

Larger pivoted line left with disarm / reset furrow (Titanium System 2014)

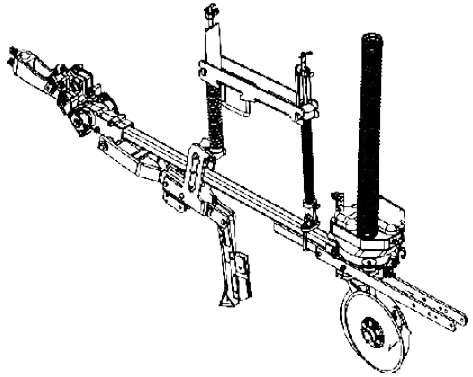

Smaller right line with furrower / cutter holder for 3rd deposit (Universal System 2014)

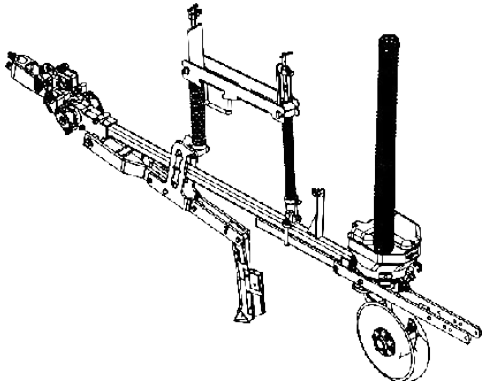

Larger left line with furrower with cutting disc holder for 3rd deposit (Universal System 2014)

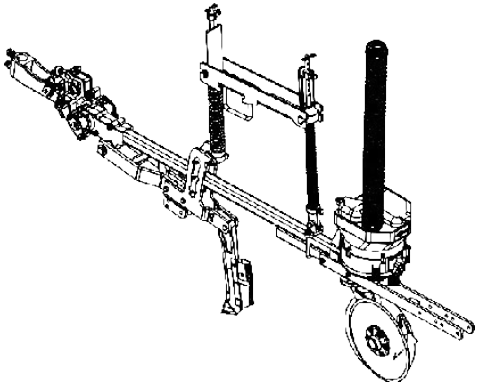

Smaller right line with furrower with support for cutting disc for 3rd deposit (Universal Titanium System 2014)

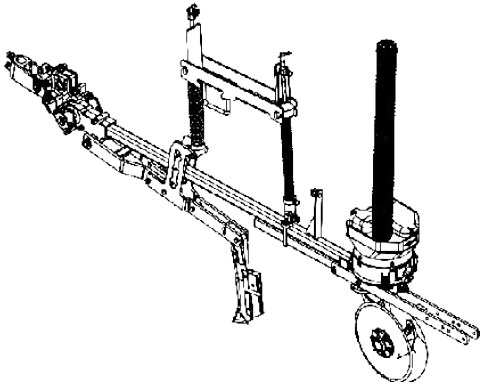

Larger left line with furrower with cutting disc holder for 3rd deposit (Universal Titanium System 2014)

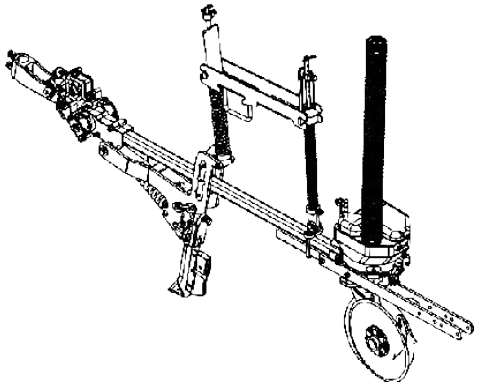

Lower right pivoted line with disarm / reset furrow for 3rd deposit (Universal System 2014)

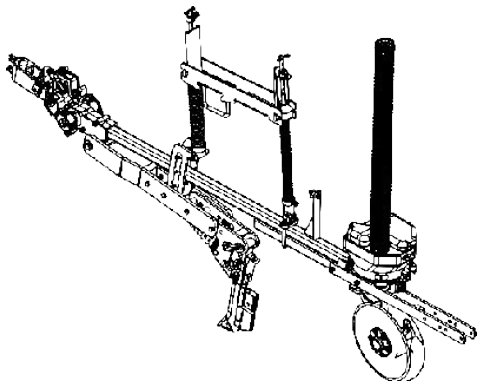

Larger left pivoted line with disarm / reset groove for 3rd deposit (Universal System 2014)

SEED ROWS

SEED ROWS

OPTIONAL ROW MODELS - CONTINUATION

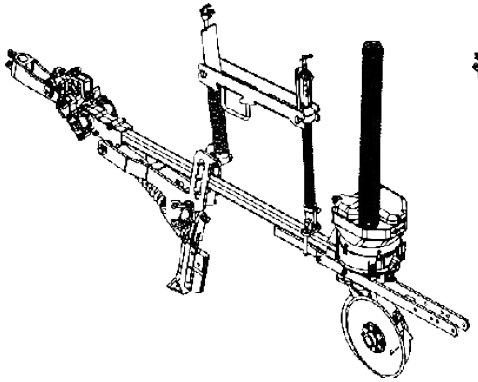

Lower right pivoted line with disarm / reset groove for 3rd deposit (Titanium System 2014)

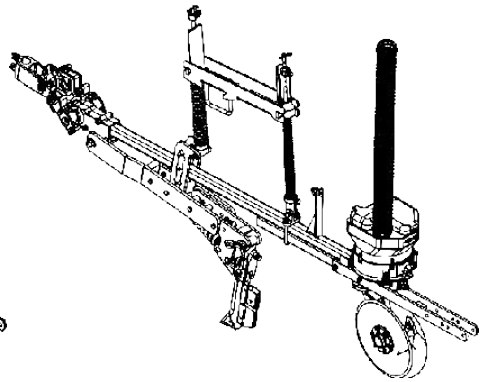

Larger pivoted line left with disarm / reset groove for 3rd deposit (Titanium System 2014)

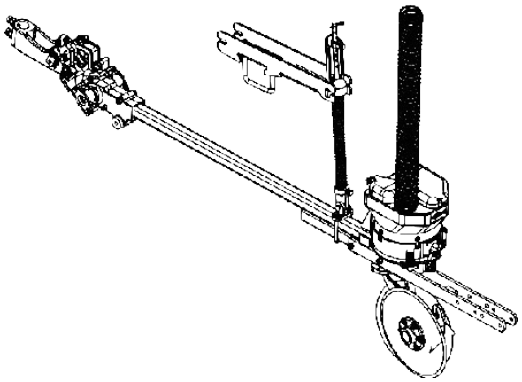

Smaller right line for oscillating wheel with support for cutting disc for 3rd deposit (Universal Titanium2014 System) without fertilizer system

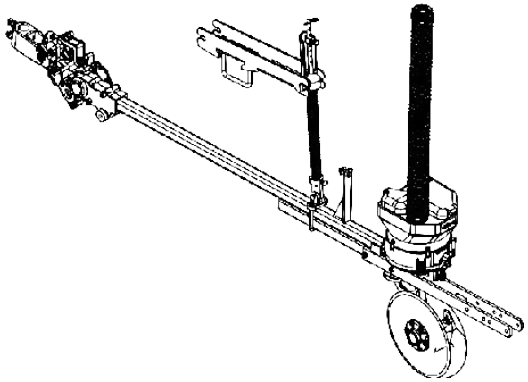

Larger left line for oscillating wheel with support for cutting disc for 3rd deposit (Universal Titanium2014 System) without fertilizer system

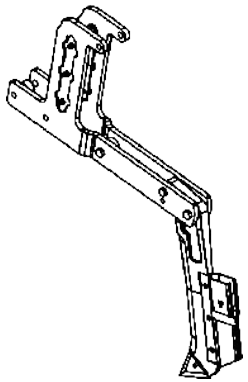

Thin furrower with smaller stem

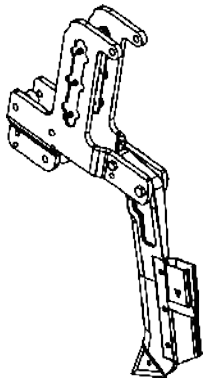

Thin furrower with smaller stem

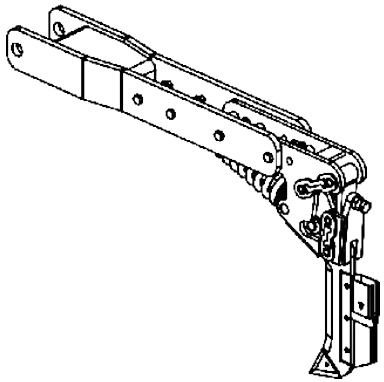

Larger automatic disarm / reset furrow (Height 540 mm)

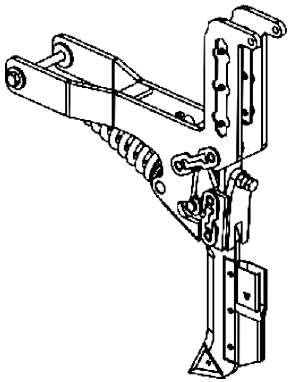

Smaller disarm / automatic reset furrow

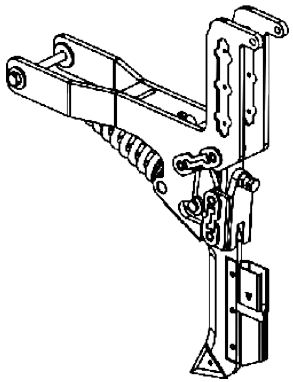

Smaller disarm / automatic reset furrow

OPTIONAL ROW MODELS - CONTINUATION

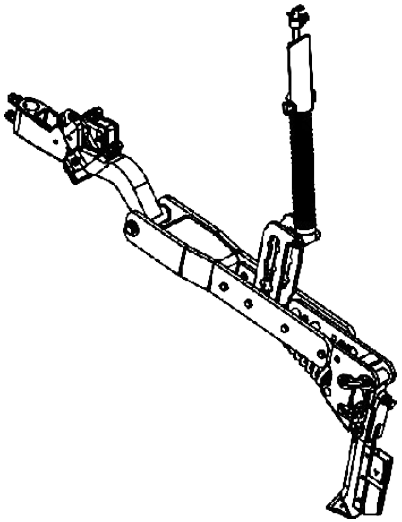

Fertilizer trolley with disarming / disarming furrower with support for cutting disc

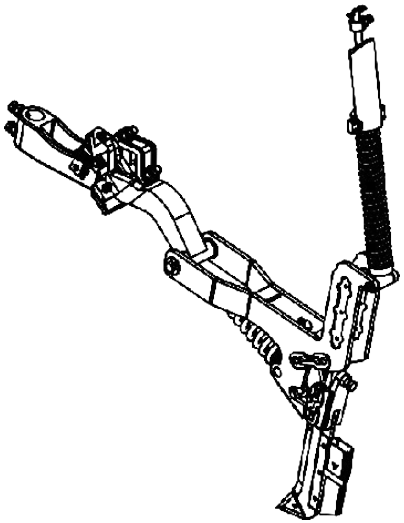

Fertilizer trolley w / disarming furrow / minor reset w / cutter disc holder

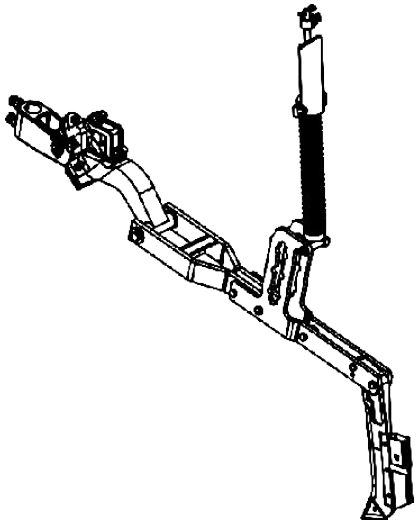

Fertilizer trolley with larger furrower w / support for cutting disc

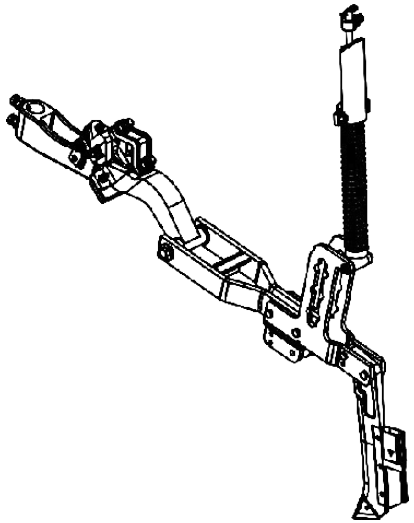

Fertilizer trolley w / smaller furrower w / cutter holder

SEED ROWS

ROW ADJUSTMENTS

CUTTING DISC DEPTH ADJUSTMENT

To adjust the cutting depth (1), proceed as follows:

1- Loosen the screws (2) and move the axle (3) to the desired adjustment. Then tighten the screws again (2).

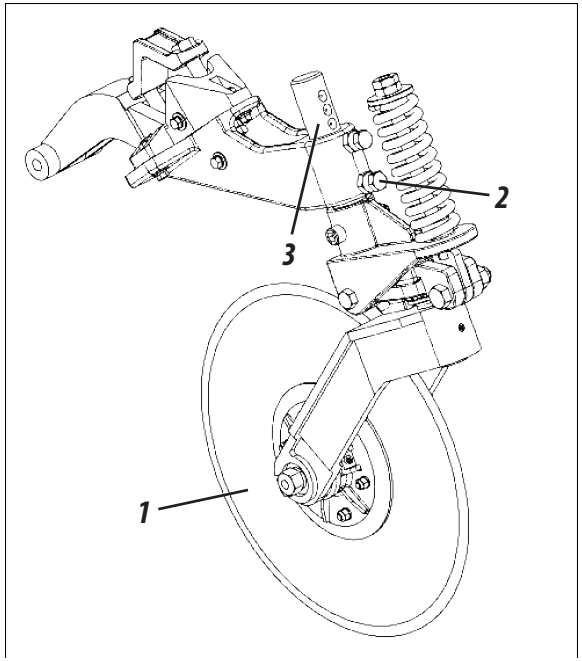

CUTTING DISC PRESSURE ADJUSTMENT

To adjust the cutting disc pressure (1), proceed as follows:

1- Turn the nut (2) in the clockwise direction for increased pressure in the spring (3).
2- Turn the nut (2) in the counter-clock direction for decreased in the spring (3).

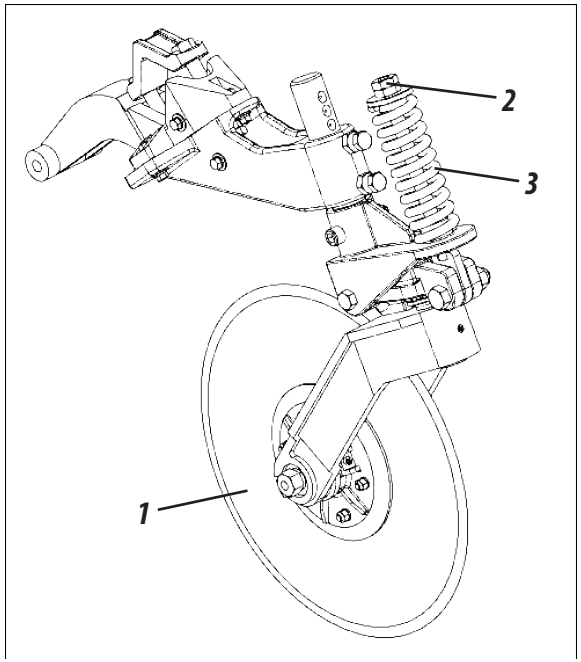

ATTENTION | ***After concluding the cutting disc depth and pressure adjustments, repeat these processes on all rows.***

IMPORTANT | ***When adjusting cutting disc pressure, be careful not to annul the articulating action of the cutting disc.***

PRESSURE ADJUSTMENT

(+) MORE SPRING PRESSURE :	*(-) LESS SPRING PRESSURE:*
More disc pressure for cutting the soil.	*Less disc pressure for cutting the soil.*

NOTE | ***These cutting disc depth and depth adjustments must be performed in the field before starting to work, pay attention to the type of soil being worked, in order to obtain the best performance from the seeder.***

SPRING PRESSURE ADJUSTMENT

The row (1), is equipped with spring pressure (2) that can be adjusted for higher or lower pressure that will increase or decrease the power transferred to the double disc, (3). Then to adjust the spring pressure, proceed as follows:

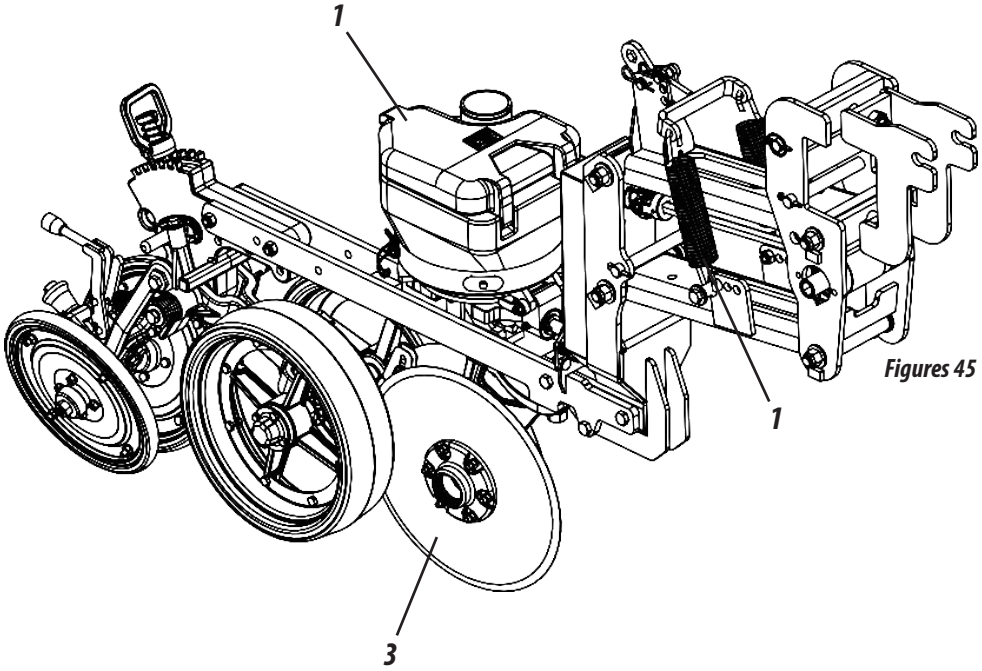

Figures 45

1- Use the wrench (4) found on the side of the seeder, loosening it by the ring latch (5).

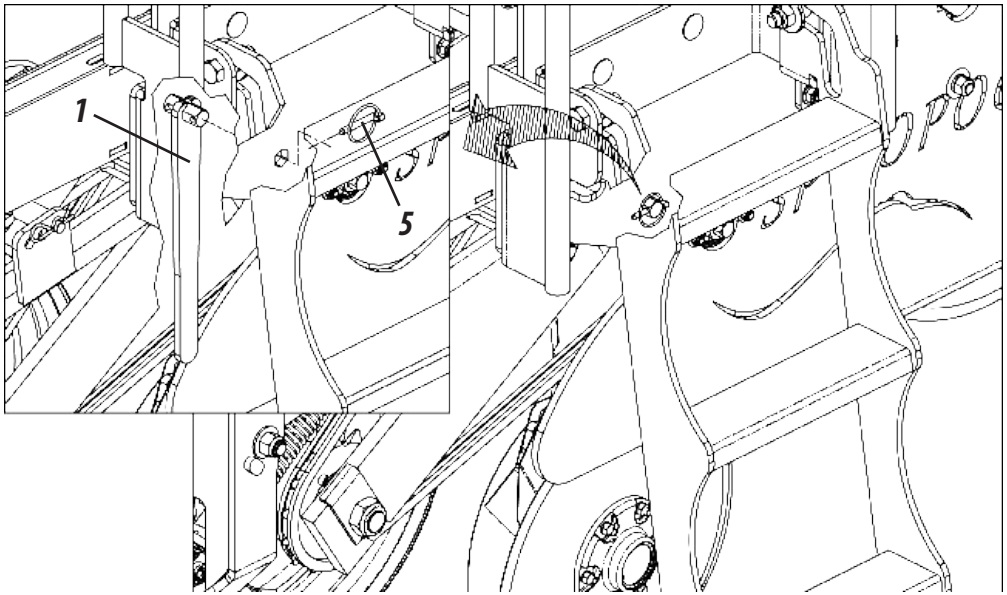

ATTENTION | ***After concluding the spring adjustment process, repeat the procedure on all rows.***

ROW ADJUSTMENTS

2- Then place the wrench (4), on the lever (6) on the row (1), loosen the latch (7), remove the pin (8). After move the wrench (4) adjusting the lever (6) to the desired position.

3- Conclude by latching the lever again (6), using the pin (8) and latch (7).

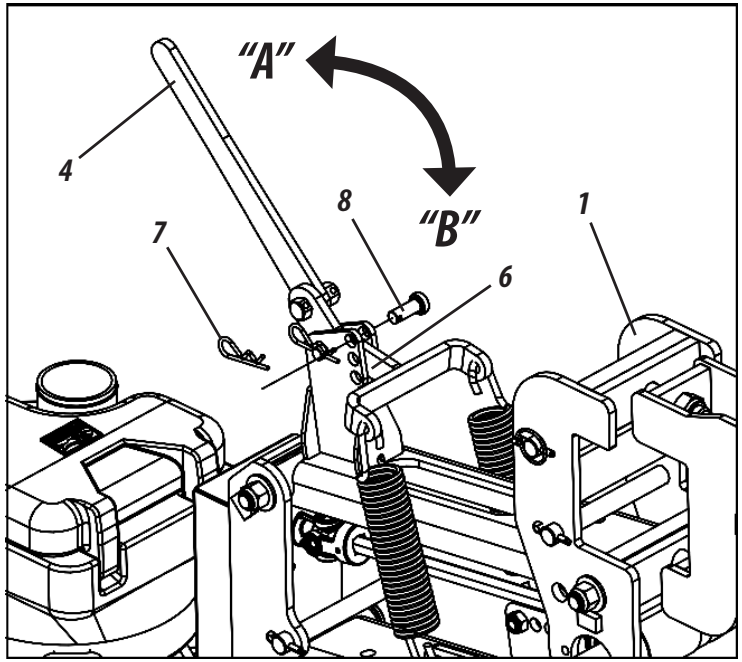

Position "A"	More Pressure on the Spring
Position "B"	Less Pressure on the Spring

When adjusting the pressure spring (2), verify which of the adjustment points **"C"** serves the adjustment needs better. If these adjustments do not achieve the desired results, then now perform a new adjustment on **"D"** adjustment points.

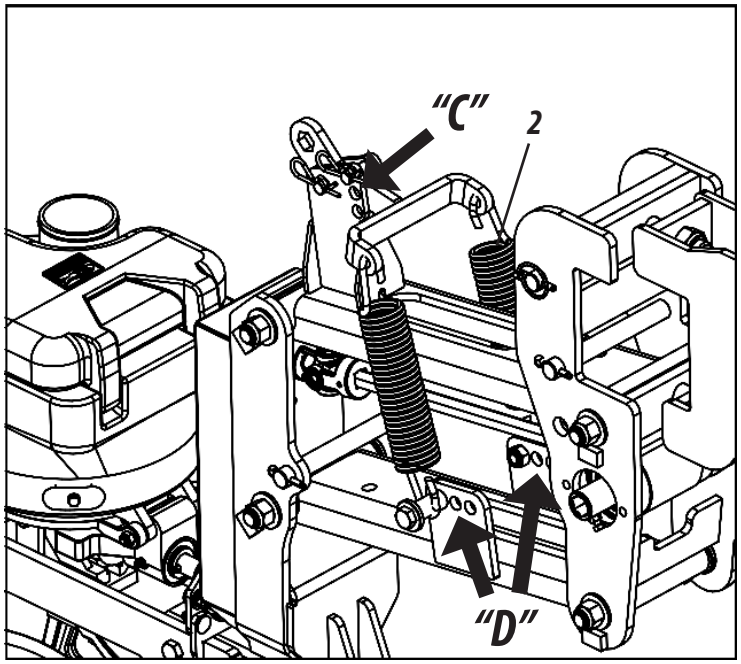

Position "C"	1st Adjustment Option
Position "D"	2nd Adjustment Option

IMPORTANT

Verify several times the operating depth on each row during the seeding process, especially in fields where the dampness varies, from one soil to others.

NOTE

This adjustment increases or decreases the spring pressure, it must be done in the field before starting to work, pay attention to the type of soil being worked, in order to obtain the best performance from the seeder.

DOUBLE DISC CLEANER ADJUSTMENT

The double disc is equipped with flexible and adjustable cleaners to remove soil that adheres to the discs. Proceed as follows to adjust the cleaners:

1- Loosen the screw (1), adjust the wipers (2) to the ideal position and retighten the screw.

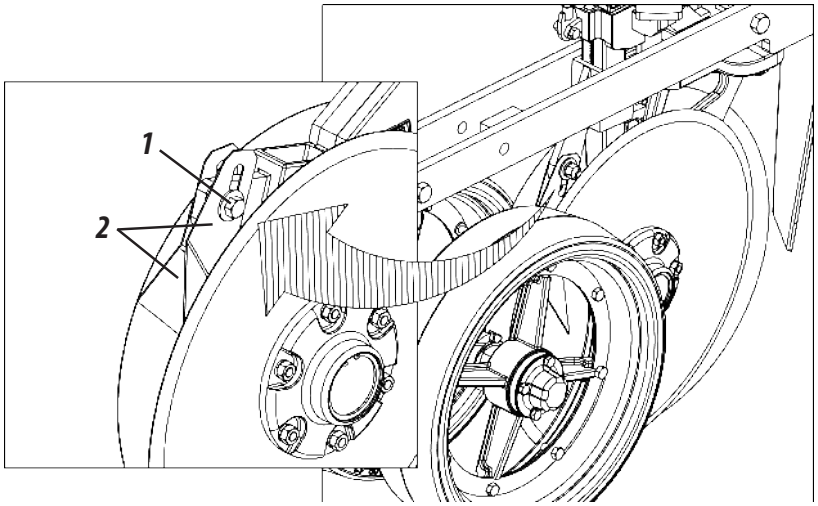

ATTENTION | ***After concluding the adjustment of the cleaners (1), repeat this process on all rows***

OSCILLATING WHEEL DEPTH ADJUSTMENT

The oscillating depth limit wheels are equipped with just one support point to enable its oscillation, if there is any obstacle blocking one of its courses or irregularities on the soil that are lifting and crossing it, making it immediately return to its initial position without lifting the double disc to its proper position. The depth of the seed is performed individually by the depth limiters. Then to adjust these, proceed as follows:

1- Pull the handle (1) up, and move the adjuster (2) until the desired point to adjust the depth wheel (3), after lower the handle (1) latching the adjuster (2), **as shown in figure 47.**

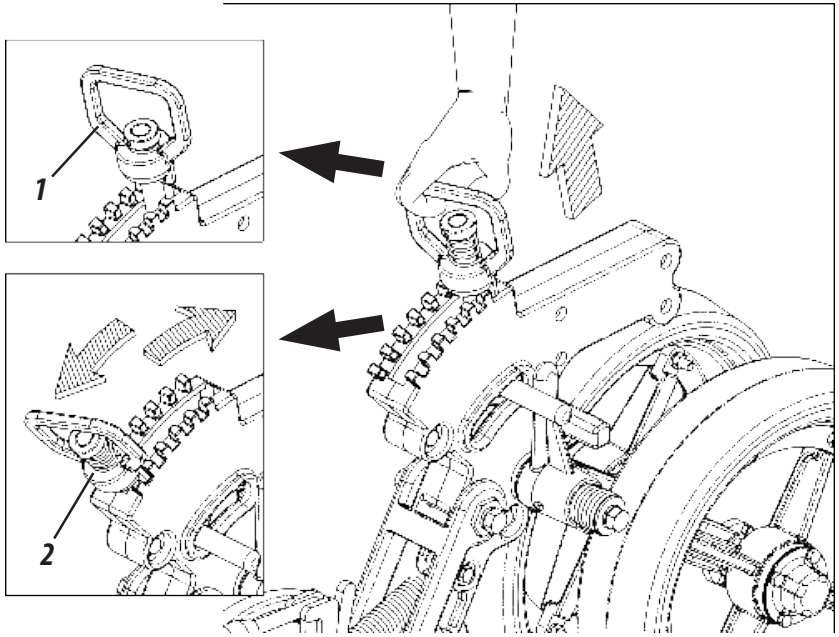

NOTE | ***The oscillating cart provides 18 adjustment settings.***

ROW ADJUSTMENTS

ROW ADJUSTMENTS

DEPTH LIMITING WHEEL

The "V" compactor wheels (1), are used for closing the furrow laterally, placing the soil immediately over the seed, thereby avoiding excessive compaction and removing air spaces, facilitating germination and the development of the plant. To adjust an increase or decrease in the closure angle of the "V" compactor wheels (1), pull the lever (2) up to move the adjuster (3) to the desired point, after that lower the lever (2) latching the adjuster (3), **as shown in detail "A"**. There are five adjustments in the "V" compactor wheels.

Increased Pressure: Move the lever (2) back, providing more pressure in the wheel (1).
Decreased Pressure: Move the lever (2) forwards, providing less pressure in the wheel (1).

- The pressure in the "V" compactor wheel (1), can also be adjusted by the lever (4). Proceed **as shown in detail "B"** to perform this adjustment.

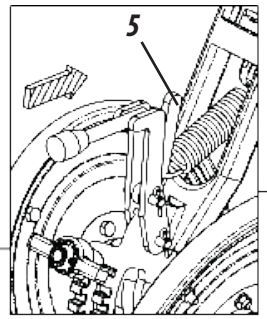

Less Pressure

Detail "B"

More Pressure

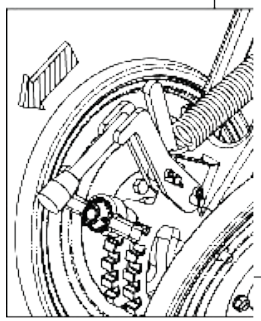

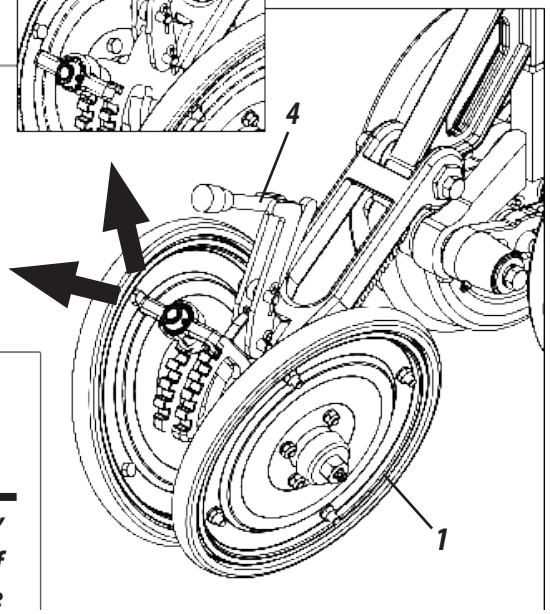

More Pressure: Move the lever (4) back, providing more pressure to the wheel (1).
Less Pressure: Press the lever (5) moving the lever (4), providing less pressure in the wheel (1).

ATTENTION

Perform the same adjustment on all the "V" compactor wheels and considering the type of soil, seed, and seeding depth, as to not affect the free emergence of the plants.

Detail "A"

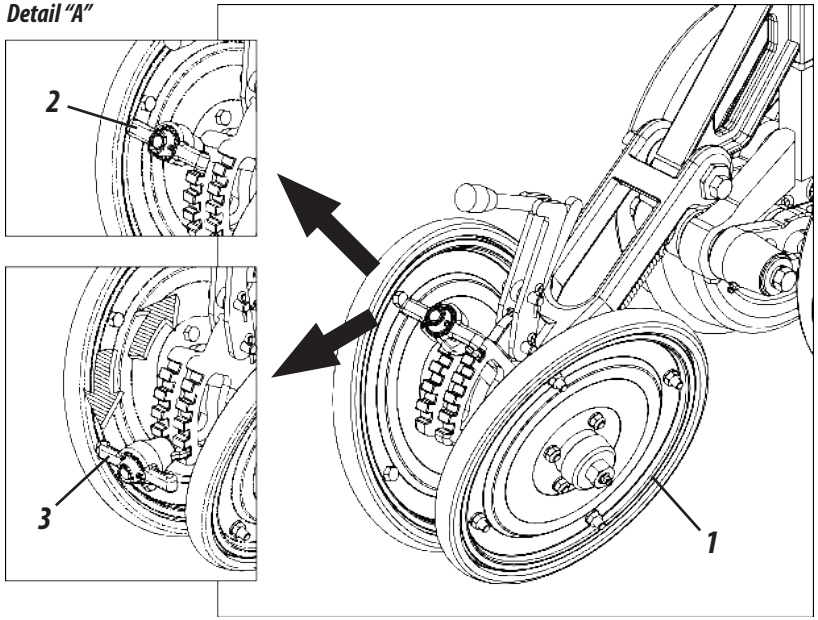

"V" ANGLE WHEELS

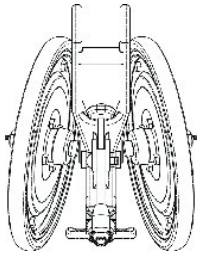

Completely closed angle position (Less soil over the seed).

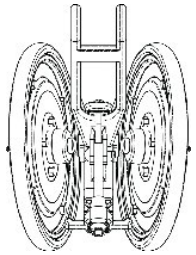

Open angle position (More soil over the seed).

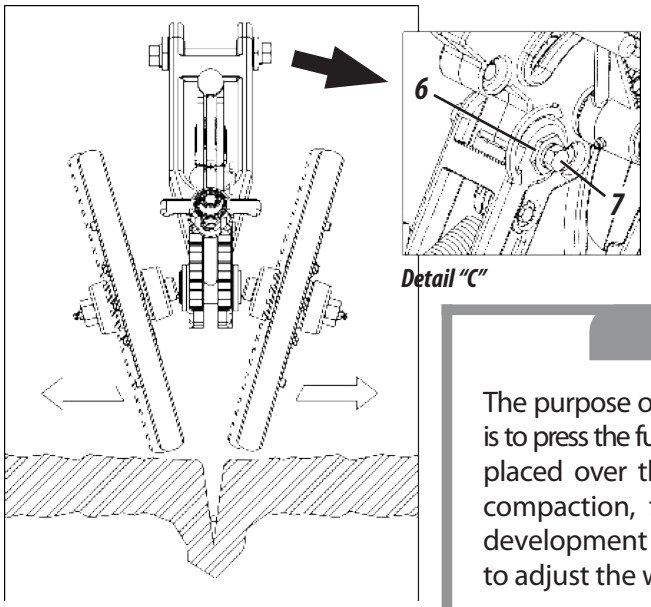

Detail "C"

To horizontally move the wheels, they were developed with eccentric bushings (5). For this adjustment, then proceed as follows:

1- Loosen the screws (7), turn these bushings (6), using a wrench for adjusting the wheels and then aligning them to the furrow, so that a larger or smaller amount of soil is laterally placed over the seed, **as shown in detail "C"**

OSCILLATING WHEEL DEPTH ADJUSTMENT

The purpose of the depth limiter wheel angle (1), is to press the furrow to make the soil be immediately placed over the seed, thereby avoiding excess compaction, facilitating germination and the development of the plant. Proceed as follows to adjust the wheels:

1- Loosen the screws and washers (1), remove the wheel(2), perform the adjustment of the wheel (3) by adjusting the wheel axle (4), after fasten the wheel again (2) using the washers and screws (1).

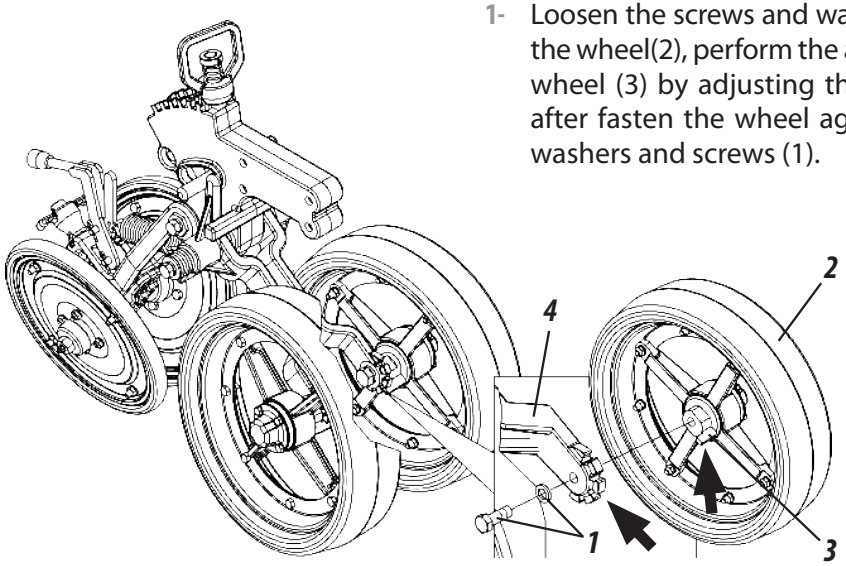

⚠ ATTENTION

Perform the same adjustment on all "V" compactor wheels and based on the type of soil, seed, and seed depth, as to not affect the free emergence of the plants.

WHEEL ANGLES

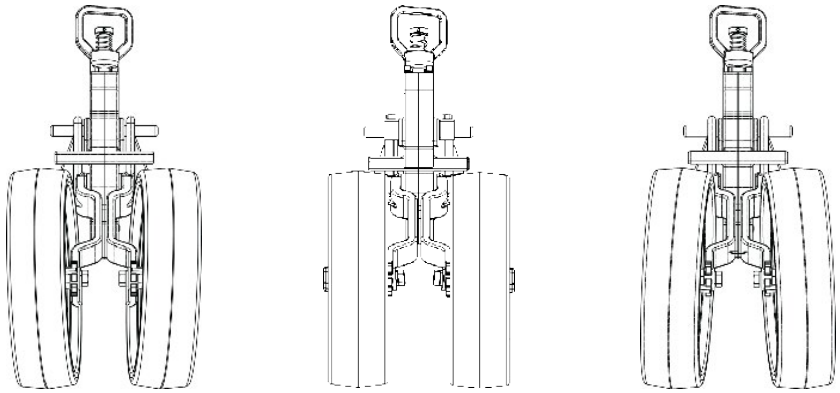

Completely closed wheel angle (Less soil over the seed).

Parallel position (Only for controlling the depth).

Open angle position (More soil over the seed).

ROW ADJUSTMENTS

ROW ADJUSTMENTS

OSCILLATING DEPTH WHEEL OPENING ADJUSTMENT

The oscillating depth wheel are equipped with an opening and closing system in order to adapt to fields based on increased or decreased denseness of residue mulch or with increased or decrease dampness. The oscillating depth wheels are shipped from the factory in the closed position. Then to open the oscillating depth wheels, proceed as follows:

1- Loosen the screw (1), lock washer (2) and flat washer (3), Remove the 6 shims (4) and the wheel support (5), as shown in the figure next to this.

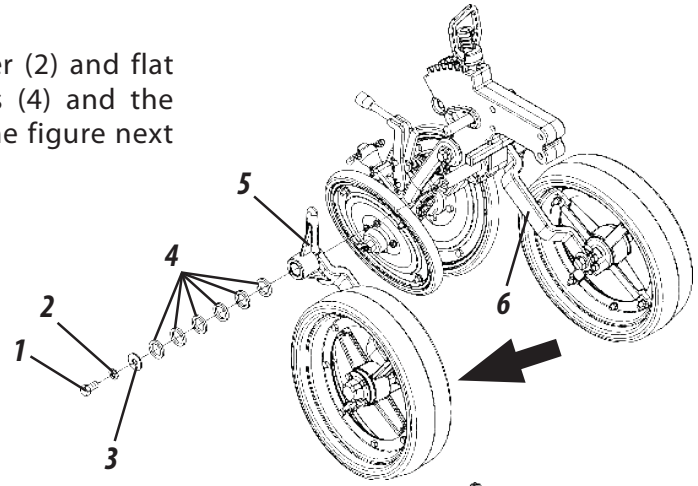

2- Then perform the reverse process, first inserting the 6 shims (4), after the wheel support (5) and conclude by placing the flat washer (3), lock washer (2) and tighten the screw (1), as shown in the figure next to this.

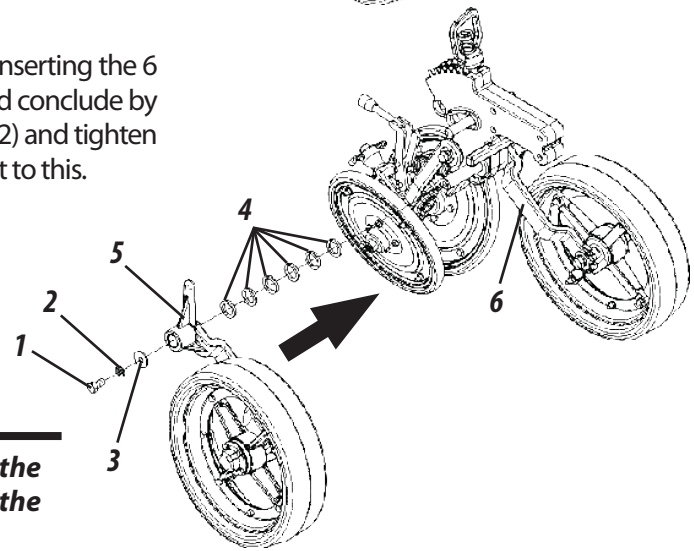

ATTENTION

Perform the same procedure on the other 3 wheel support (6) and for all the oscillating depth wheels.

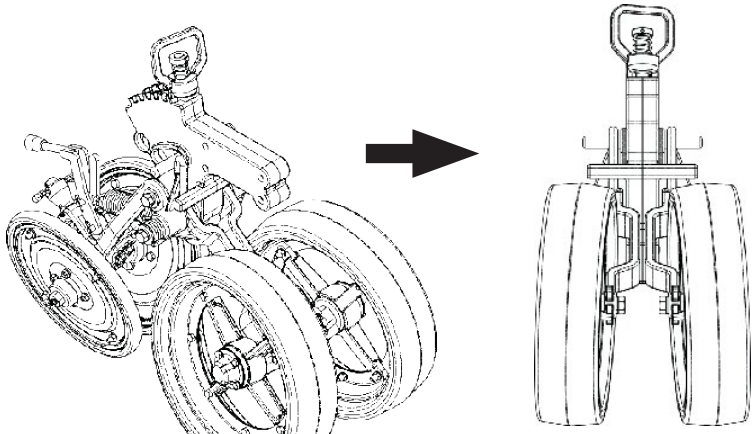

Closed Wheel Position

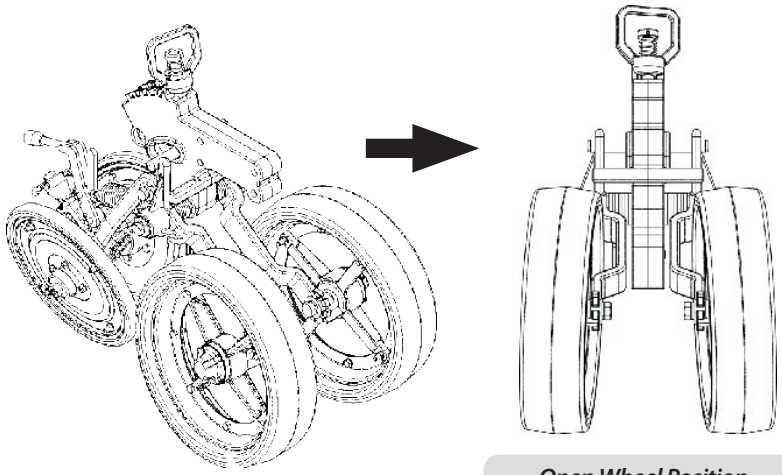

Open Wheel Position

ADJUSTMENT OF THE ANCHOR'S ATTACHMENT ANGLE (PIVOTED SYSTEM) - OPTIONAL

The furrowers (1) have 3 options for adjusting the angle of attack. To adjust the angle of attack of the furrowers, proceed as follows:

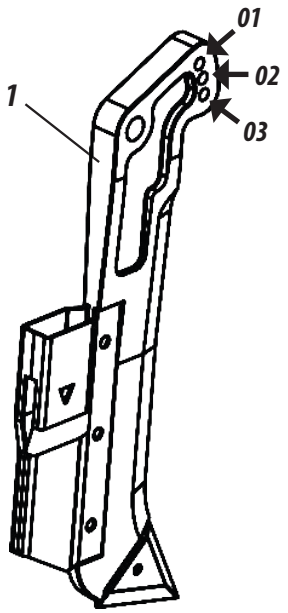

1- Remove the screw (2), articulate the groove (1) in the ideal setting and replace the screw (2).

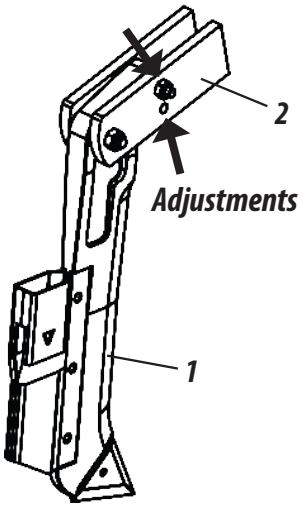

REGULATION OF THE FURROWER FOR AUTOMATIC DISARM OPTIONAL

The furrower with automatic disarm has several working settings to better adjust to the type of soil to be worked. To adjust the sensitivity of the plow disarm, proceed as follows:

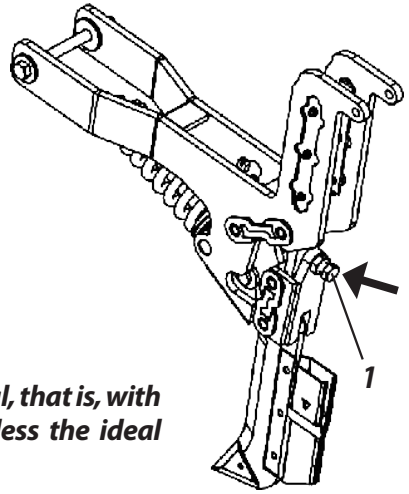

FOR GREATER DISCUSSION OF THE SULCATOR.

1- Tighten the screw (1) by turning it clockwise.

FOR LESS DISCUSSION OF THE SULCATOR.

2- Loosen the screw (1) by turning it counterclockwise.

ATTENTION

This adjustment is minimal, that is, with the screw (1) around or less the ideal adjustment.

REGULATION OF THE FURROW RESET LOAD - OPTIONAL (FIGURE 55)

The furrower automatic reset system leaves the factory with pre-load regulation on the spring determined that can vary between 170 to 180 mm in its length.

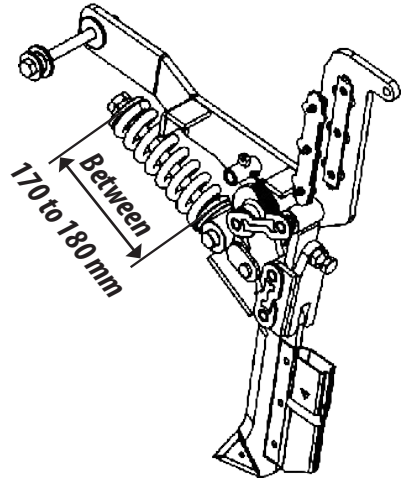

ATTENTION

Do not make any other adjustments to the plow spring. If you are constantly disarming, check the soil conditions, which can be very hard or have a high rate of compaction.

ROW ADJUSTMENTS

ROW ADJUSTMENTS

FERTILIZER DEPTH AND PRESURE IN THE SEED ROWS (PIVOTED SYSTEM) - OPTIONAL

The depth adjustment of the fertilizer is done by adjusting the spring pressure exerted on the seed rows. That adjustment is done using bushings. Proceed as follows to adjust the spring pressure:

INCREASING DEPTH.

1- Loosen the screw (1) and move the bushing (2) up.

DECREASING DEPTH.

2- Loosen the screw (1) and move the bushing (2) down.

INCREASING PRESSURE.

3- Loosen the screw (3) and move the bushing (4), up.

ATTENTION

Perform the same procedure above but now in the rod to adjust the seed row pressure (6).

IMPORTANT

Repeat this procedure on all the rows when the adjustment is concluded in order to avoid variation among the rows.

NOTE

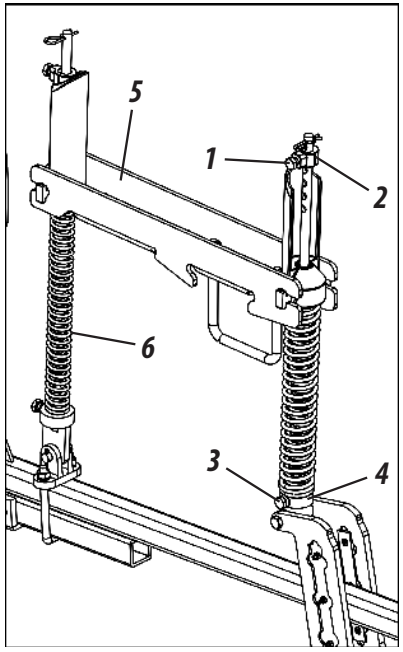

ADJUSTING THE FURROW TINE FOR INCREASED OR DECREASED MISMATCHING (PIVOTED SYSTEM) - OPTIONAL

The **SP TOPOGRAFIC** seeder can be purchased with a pivoted row and a mismatching furrow tine system (1). This furrow tine is used in cases when the mulch cover is very dense, thereby increasing the mismatching of the furrow tines, providing increased flow. So, to adjust the furrow tine, proceed as follows:

1- Loosen the screws (2), lock washers and nuts (3).

2- Then remove the furrow tine (4) and place it in front of the support (5).

3- After, fasten it again using the screws (2), lock washers, and nuts (3).

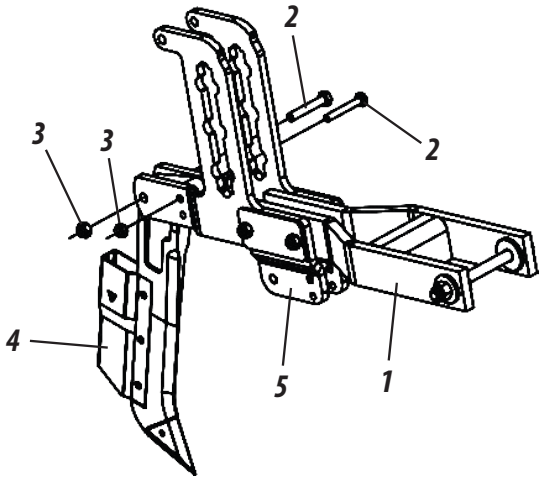

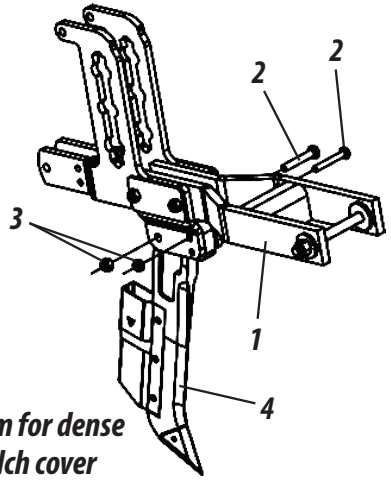

System for dense mulch cover

OPERATING RECOMMENDATIONS

01 - After the first day operating the seeder, retighten all the screws and nuts. Verify the condition of the pins and latches.

02 - Do not maneuver or go in reverse when the seed rows are lowered and in contact with the soil.

03 - Abide by the lubrication change intervals.

04 - When loading the storage compartments verify if there are no objects inside of them, such as nuts, screws, etc. Use seeds that are free of impurities.

05 - Always observe the operation of the seed spreaders and also the required adjustments at the beginning of the seeding process.

06 - Keep the seeder always leveled, the tractor traction bar must remain fastened and the operating speed must remain constant.

07 - Always verify the seed depth and the compactor wheel pressure.

08 - Observe the position of the fertilizer as related to the seeds in the soil.

09 - Whenever performing any verification or maintenance on the seeder, it must be lowered until the ground and the tractor motor must be turned off.

10 - Do not make sharp turns with the seeder while operating it, especially in direct contact while seeding. The seeding row components can be damaged.

11 - Do not activate the hydraulic cylinders partially. Always activate them completely when raising and lowering the seeder.

12 - The seeder is equipped with several adjustments, as only the local conditions can define the optimal adjustment for each condition.

13 - Only load the seeder in the location where it will be operated.

14 - Do not transport or work with excessive load in the seeder.

15 - The instructions for the right side and the left side are based on looking from behind the seeder.

16 - The **SP TOPOGRAFIC** seeder operates most efficiently at a speed range from 5 to 7 km/h.

17 - In cases of any doubts/questions, never operate or handle the seeder, consult with the After-Sales Department.

18 - Telephone: 0800-152577 or e-mail: posvenda@baldan.com.br

MAINTENANCE

TIRE PRESSURE

1- The tires must be filled correctly in order to avoid premature wear due to excess or low por excesso ou falta de pressão e assegurando precisão na distribuição.

2- The tire pressure in the **SP TOPOGRAFIC** must be **70 lb/pol²** in each tire.

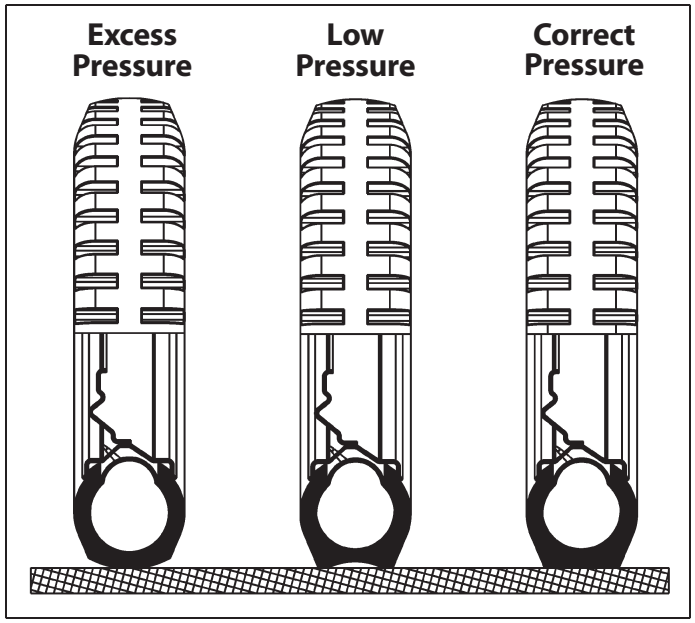

ATTENTION

When filling the tires on the seeder, do not exceed the recommended pressure. Always keep all the tires at the same pressure in order to avoid wear and maintain uniformity in the seeding.

LUBRIFICATION

3- Lubrication is essential for good performance and good durability of the moving parts in the **SP TOPOGRAFIC**, contributing to maintenance cost savings.

4- Before starting to operate it, carefully lubricate all the grease fittings always abiding by the lubrication intervals on the following pages. Certify the quality of the lubricant, regarding its efficiency and purity, avoiding contaminated products, water, dirt, and other agents.

GREASE AND EQUIVALENT TABLE (TABLE 13)

MANUFACTURER	*RECOMMENDED GREASE TYPES*
Petrobrás	Lubrax GMA 2
Atlantic	Litholine MP 2
Ipiranga	Ipiflex 2
Castrol	LM 2
Mobil	Mobilgrease MP 77
Texaco	Marfak 2
Shell	Alvania EP 2
Esso	Multi H
Bardahl	Maxlub APG-2 EP
Valvoline	Palladium MP-2
Petronas	Tutela Jota MP 2 EP
	Tutela Alfa 2K
	Tutela KP 2K

Table 13

IMPORTANT

If there are other lubricants and/or brands equivalent to those listed on this table, consult the technical manual of the lubricant of the manufacturer.

LUBRICATE AFTER EVERY 10 HOURS OF OPERATION

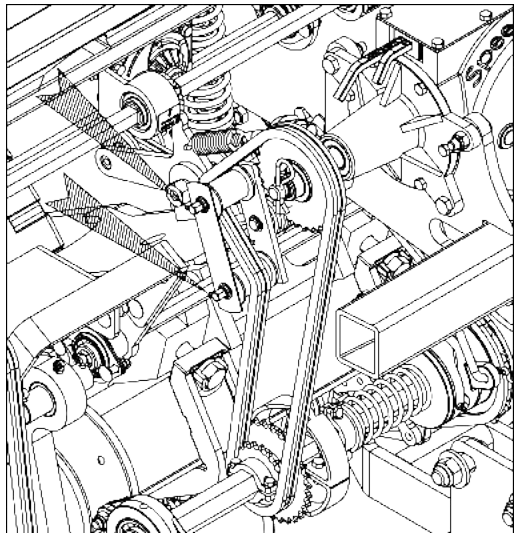

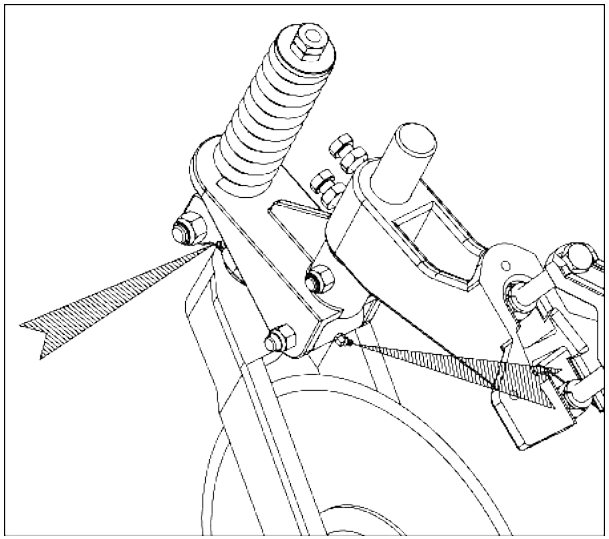

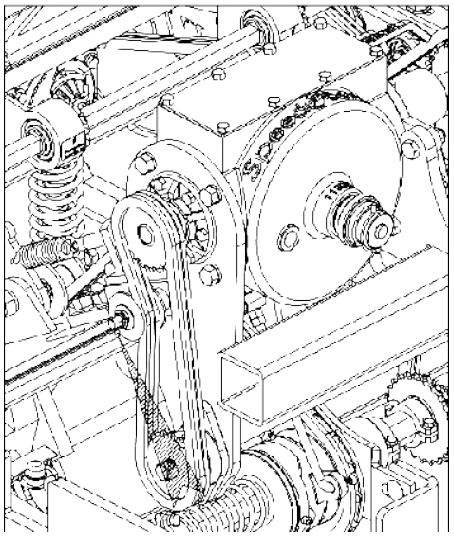

ATTENTION

Do not apply excessive grease and abide by the recommended lubrication intervals.

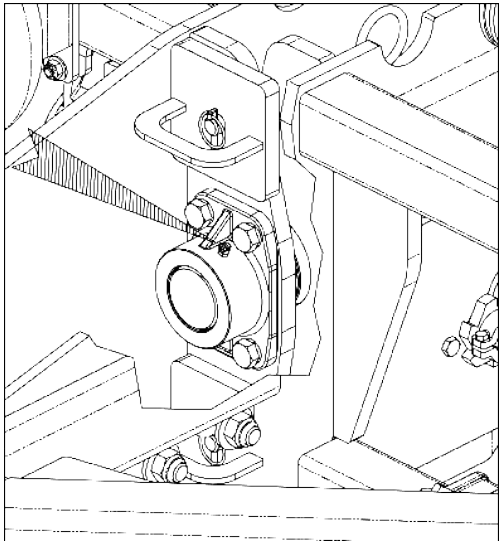

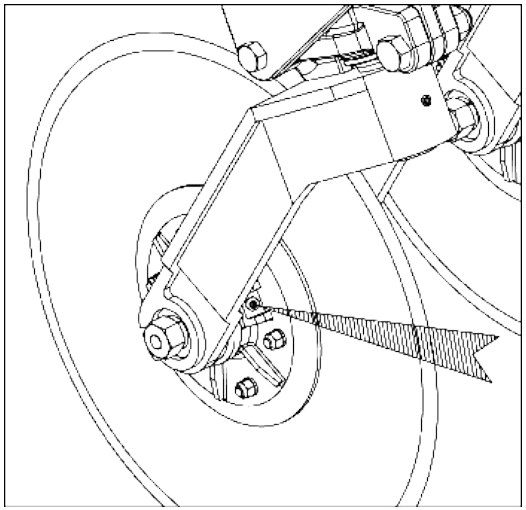

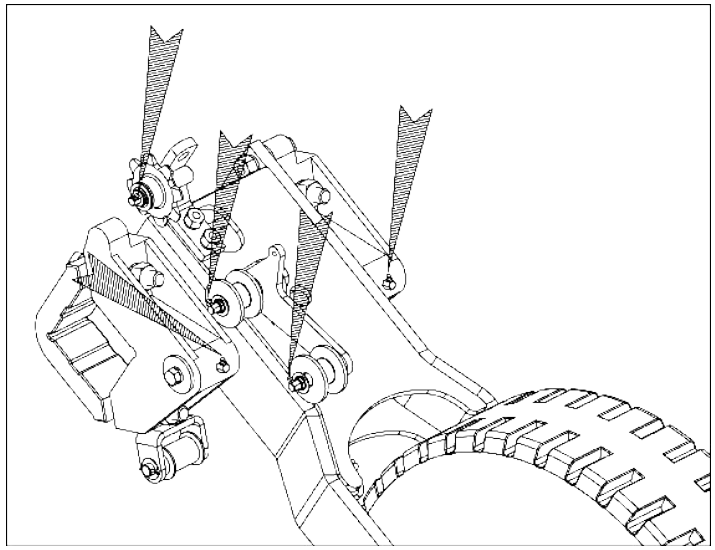

MAINTENANCE

LUBRICATE AFTER EVERY 10 HOURS OF OPERATION - CONTINUATION

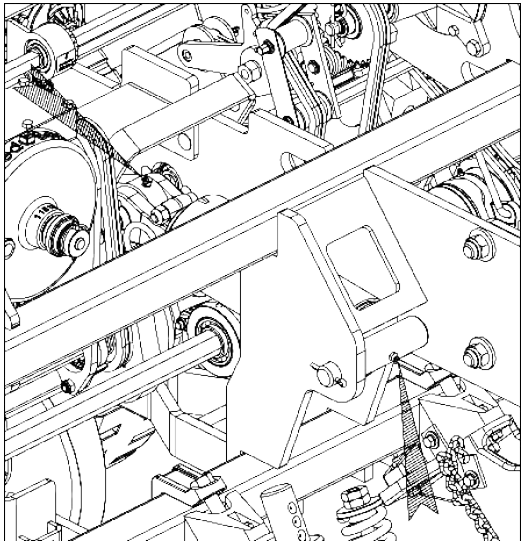

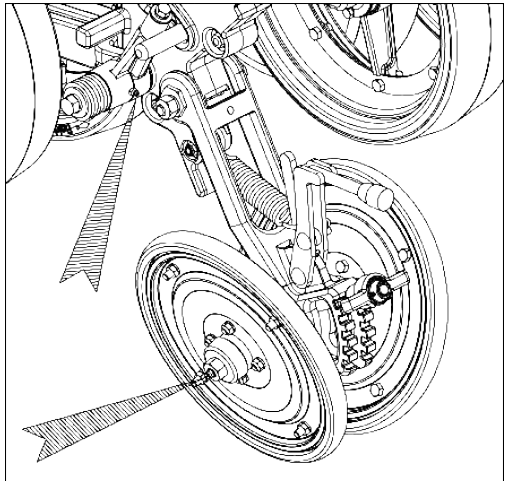

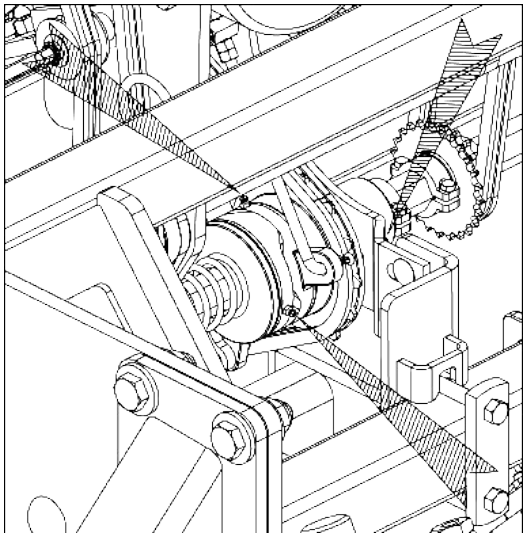

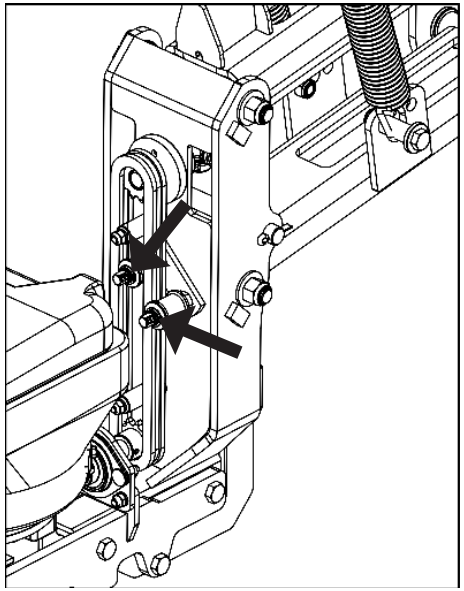

Proceed as follows to lubricate the row marker (1) hub):

1- Remove the retention ring (2) from the hub (3). Examine bearings, if there is any play; adjust that by tightening the castle nut (4). Insert new grease in the hubcap (5). Replace the hubcap (5) on the hub and fasten it using the retention ring (2).

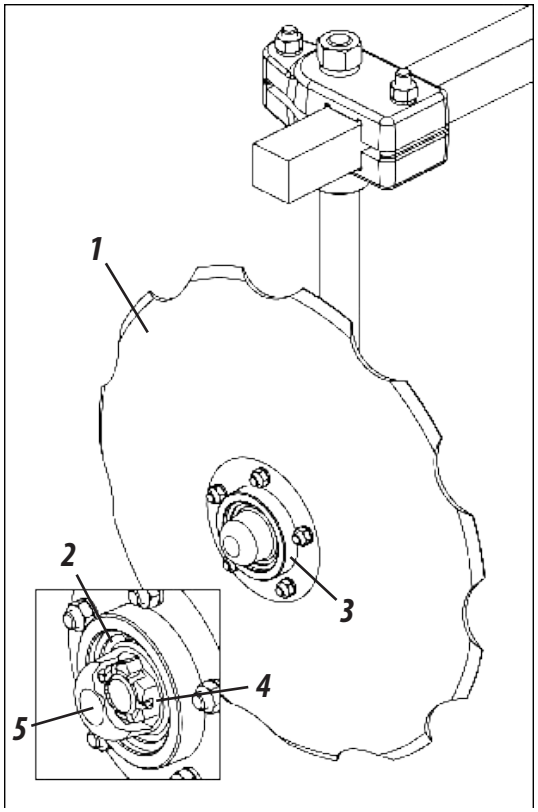

ATTENTION | ***Do not apply excessive grease and abide by the recommended lubrication intervals.***

LUBRICATE AFTER EVERY 30 HOURS OF OPERATION

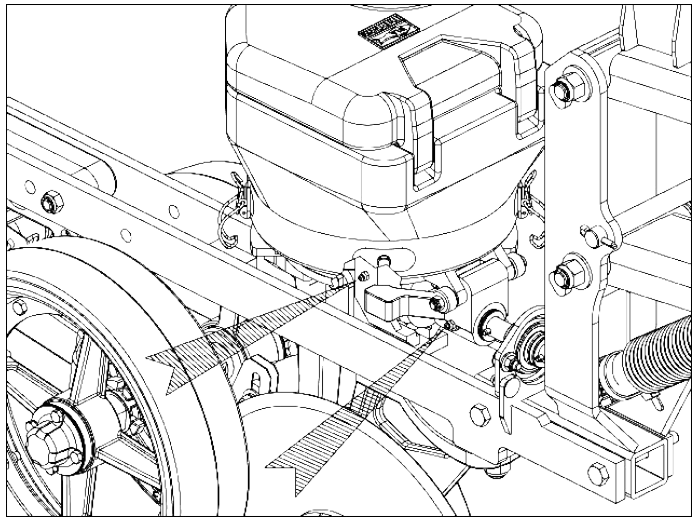

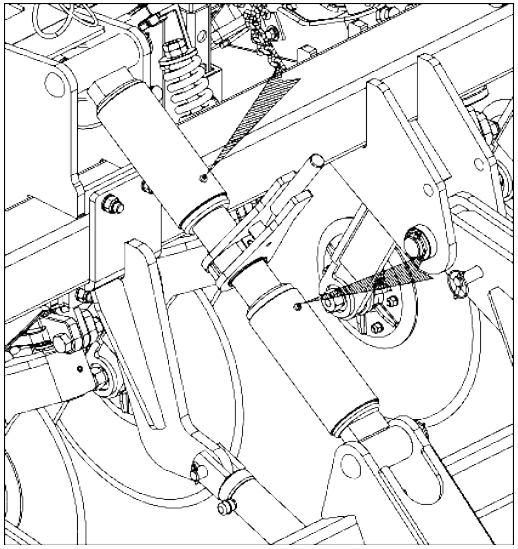

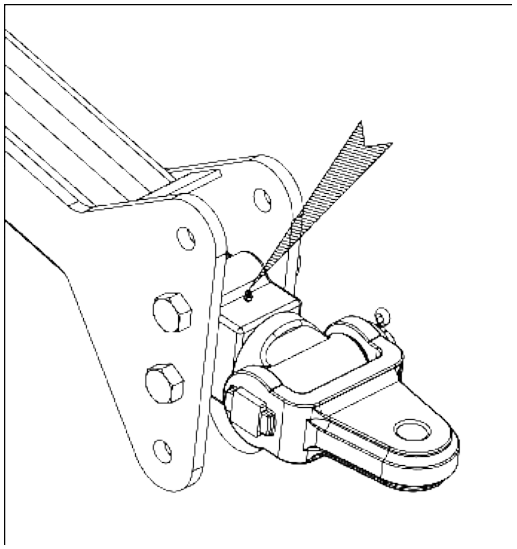

LUBRICATE AFTER EVERY 60 HOURS OF OPERATION

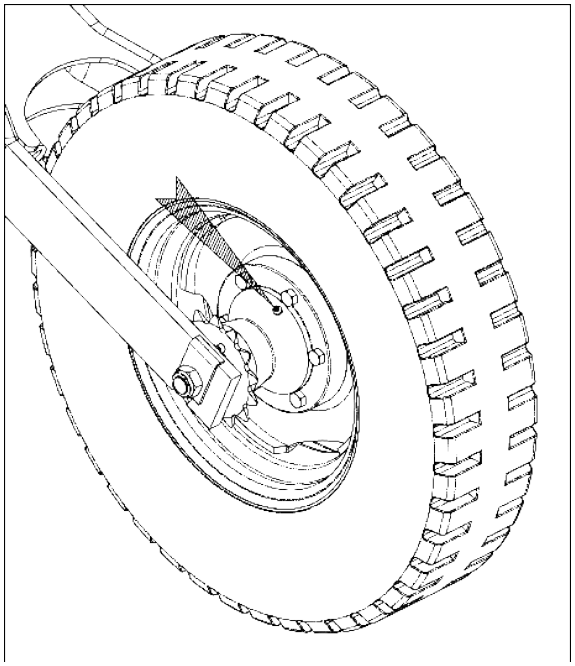

MAINTENANCE

MAINTENANCE

LUBRICATE EVERY 200 HOURS OF OPERATION

1- Periodically lubricate the compacter wheels (1) approximately every 200 hours of operation and at the end of the harvest, so to do this, proceed as follows:

2- In the compactor wheels (1) loosen the screws and washers (2), remove the hubcap (3) and insert new grease. Replace the hubcap (3) on the compactor wheels (1) and fasten them using screws and washers (2).

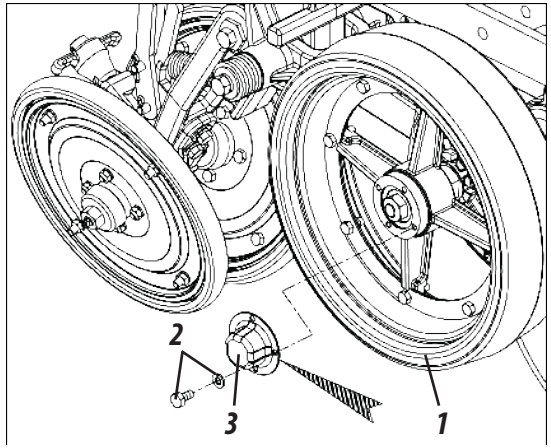

CHAIN STRETCHER

Proceed as follows for the chain stretcher:

1- Loosen the nut (1), slide the stretcher (2) adjust the chain tightness (3). Then retighten the nut (1).

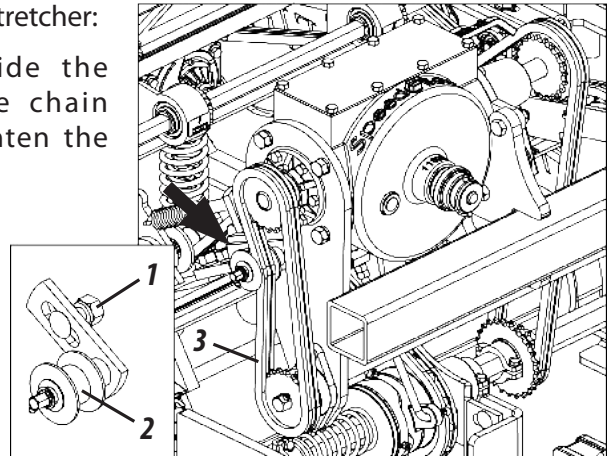

ATTENTION

Loosen the nut (1), slide the stretcher (2) adjust the chain tightness (3). Then retighten the nut (1), as shown in figure 61.

OSCILLATING STRETCHER

The stretcher (1) is equipped with a tightening spring (2) for increased flexibility. If more pressure is necessary in the chain stretcher, loosen its internal nut (3) turn the axle (4) passing the spring coupler (2) to reach another tooth of the rosette of the axle and then retighten the internal nut again (3).

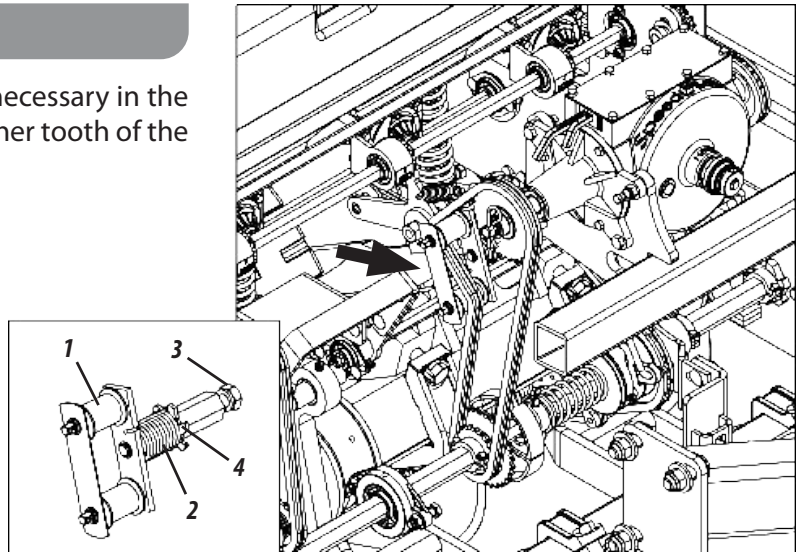

EXCHANGE OR MAINTENANCE OF THE CARDAN ON THE LINE

When changing or servicing the cardan (1) on the line (2), assemble it correctly as instructed below.

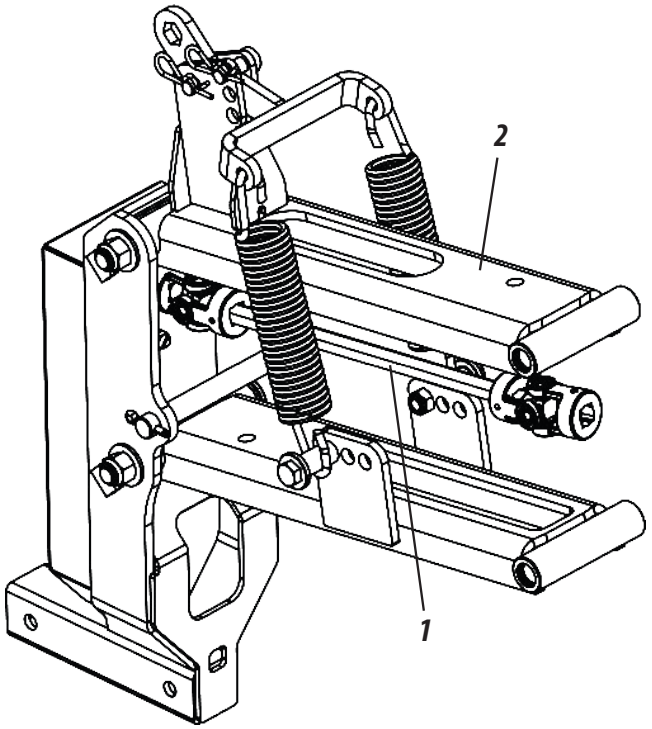

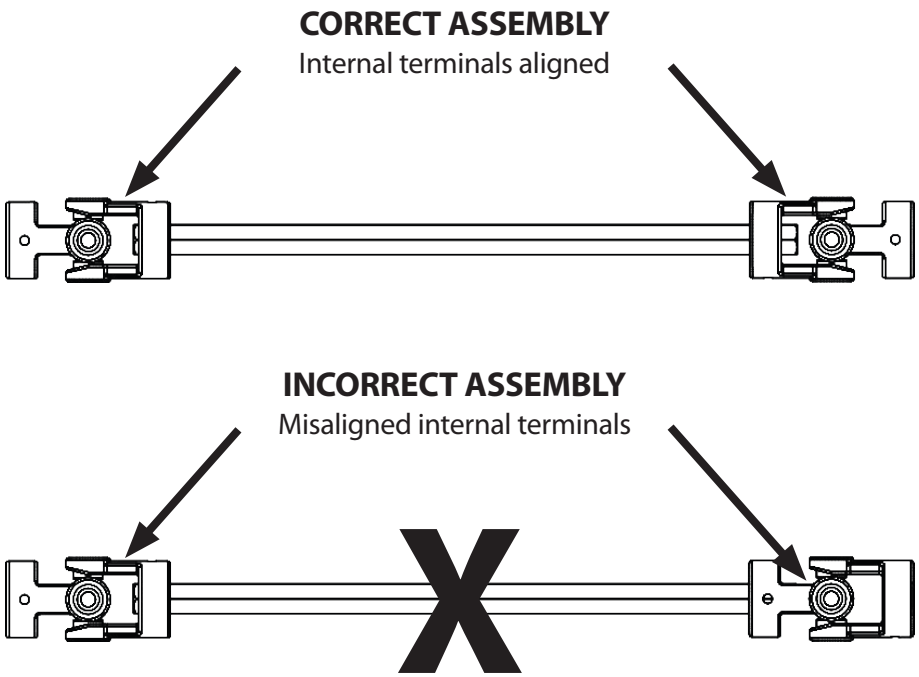

ATTENTION | ***Any misalignment between the internal terminals, the assembly must be considered incorrect. Incorrect mounting of the cardan causes excessive vibration, damaging the transmission.***

MAINTENANCE

OPERATING MAINTENANCE

PROBLEMS	PROBABLE CAUSES	SOLUTIONS
One seed row is not as deep as the others.	Adjust the pressure on the depth limiter wheels or the row springs.	Adjust all the depth wheels and the row spring pressure to be the same.
The furrow is opening too much during the seeding process.	The soil is sticky and sticks to the discs or the operating speed is too fast.	Decrease the operating speed.
There is a strange noise when operating or moving when the seeder is loaded.	The wheels are loose or there is play in the wheel hub.	Retighten the wheel nuts. Adjust the bearing in the wheel hub.
The seeder leaves the seed row, on one side or the other side in the width.	The coupling bar of the tractor is loose.	Use the pin supplied with the seeder. Fasten the tractor coupler bar in the center hole.
It is not covering the furrow.	The compactor wheels are badly adjusted or the ground is damp.	Adjust the compactor wheel, moving it sideways related to the furrow.
The hydraulic cylinders stopped operating, it lifts the seeder and then it does not lower it or vice-versa.	Use a different quick coupler, a round male type and female type coupler, or vice-versa.	Proceed in changing the quick coupler, installing two of the same type.
Broken seeds.	Fast seeding speed.	Decrease the operating speed.
	Improper disc thickness.	Use a proper disc (thickness and hole diameter).
	Disc badly installed. The seed strainer is not appropriate for the disc being used.	Install the disc properly (Observe the sentence: **THIS SIDE DOWN**).
	Using damp seeds..	Use dry seeds.

CARE

1- Verify the status of all pins and screws before starting to operate the seeder.
2- The moving speed must be carefully controlled based on the conditions of the terrain.
3- Baldan seeders are used for various applications, then knowledge and attention is required while handling the equipment.
4- Only the local conditions can define the best manner for operating the seeder.
5- Whenever assembling or disassembling any part of the seeder, employ appropriate methods and tools.
6- Carefully pay attention to the lubrication intervals, for different parts of the seeder.
7- Always check for worn out parts. If any parts needs to be replaced, **always demand original Baldan parts.**

OVERALL CLEANING

1- Whenever storing the seeder, perform overall cleaning and wash only with water. Verify if any paint is worn, if this happens, apply a coat of paint and protective oil lubricate the seeder. Do not use burnt oil and/or diesel oil for this purpose.

2- After finishing the seeding process, proceed as follows:

- Remove the power transmission chains and keep them bathed in oil until the next crop.
- Remove all conductor hoses from the seeder, washing them immediately using only water and mild soap. Do not use chemical products.

3- Completely lubricate the seeder. Check the moving parts and if there is any worn parts or play, make the necessary adjustments or replace the worn parts, making contact with the ground.

4- After all maintenance care, store the seeder in a covered and dry place, properly supported. Prevent the discs from being directly in contact with the ground.

5- Whenever connecting or disconnecting the hydraulic hoses to/from the seeder, clean the connections using a dry and clean cloth, absent from any lint **(do not use rags).**

6- Replace any labels, especially warnings that are damaged or missing. Make everyone aware of the importance of them and the dangers of accidents if the instructions are not followed.

7- We recommend washing the seeder only with water at the beginning of a new crop seeding season.

ATTENTION | ***Do not use chemical products for washing the seeder, as those can damage the paint and the labels.***

SEEDER CONSERVATION - PART I

To prolong the life and appearance of the **SP TOPOGRAFIC** for longer, follow the instructions below:

1- Fertilizers and their additives are highly corrosive and their formulation is increasingly aggressive to the seeder components.

2- Wash and clean all seeder components during and at the end of the work season.

3- Use neutral products to clean the seeder, following the safety and handling guidelines provided by the manufacturer.

4- Always carry out maintenance during the periods indicated this manual.

MAINTENANCE

SEEDER CONSERVATION - PART II

The practices and care below if adopted by the owner or operator make a difference to the conservation of the **SP TOPOGRAFIC**.

1- Be careful when performing high-pressure washing; do not direct the water jet directly into the connectors and electrical components. Isolate all electrical components;

2- Use only NEUTRAL detergent and water (pH equal to 7);

3- Apply the product, following the manufaturer's instructions strictly, on the wet surface and in the correct sequence, respecting the time of application and washing;

4- Stains and dirt not remove with the products should be removed with the aid of a spong.

5- Rinse the machine with clean water to remove any chemical residues.

6- Do not use: - Detergents with a basic active ingredient (pH greater then 7), can attack/stain the paint on the seeder.
- Detergents with acid active ingredient (pH less then a 7), act as stripper/remover of zinc coating (the protection of parts against oxidation).

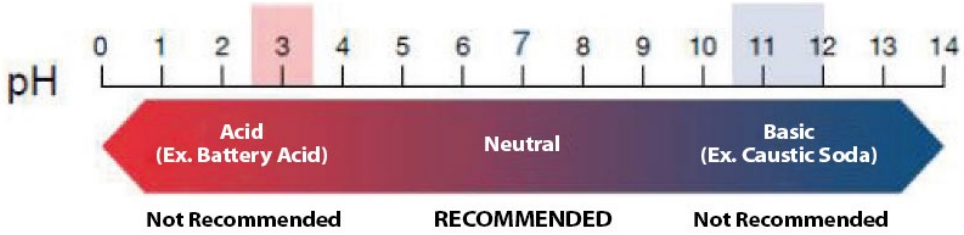

7- Let the machine dry in the shade so that water does not accumulate in its components. Drying too fast can stain your paint.

8- After drying, lubricate all chains and greases according to the recommendations in the operator's manual.

9- Spray all the machine, especially the zinc parts, with protective oil, following the manufacturer's application guidelines. The protective also prevents dirt from adhering to the machine, facilitating subsequent wasthings.

10- Observe curing (absorption) time and application intervals as recommended by the manufacturer.

⚠ ATTENTION

Do not use any other type of oil to protect the seeder (used hydraulic oil, "burnt" oil, diesel oil castor oil, kerosene, etc.).

IMPORTANT

We recommend the following protective oils:
- Bardahl: Agro protective 200 or 300
- ITWChemical: Zoxol DW - Series 4000

NOTE

Ignoring the above conservation measures may result in the loss of warranty for painted or galvanized components that may be oxidized (rust).

TITANIUM DISPENSER - OPTIONAL

The **SP TOPOGRAFIC** seeder can be purchased as an option with the **TITANIUM** seeder dispenser. See the components that are part of the **TITANIUM** below.

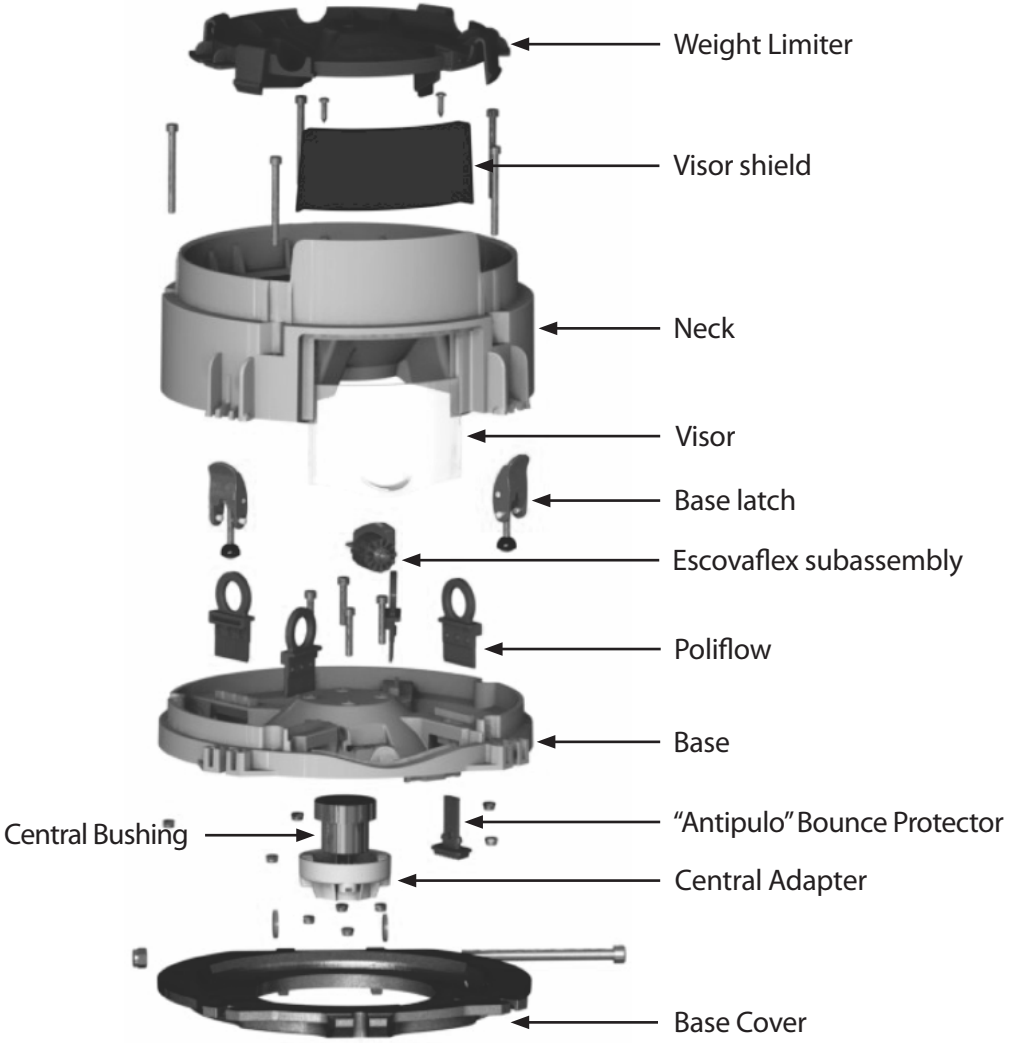

CHANGING THE POLIFLOWS IN THE TITANIUM DISPENSER OPTIONAL

The change can be done manually or using a universal set of pliers.

1st Step: Remove the weight limiter. Pull the **POLIFLOW** with your fingers or a set of pliers.

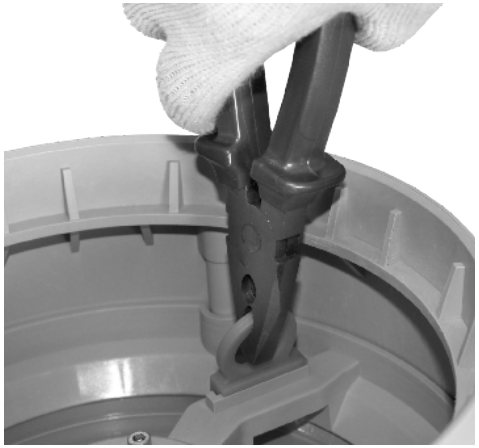

2nd Step: After fitting the **POLIFLOW** make sure it is in the correct position.

3rd Step: Insert it until the two edges meet.

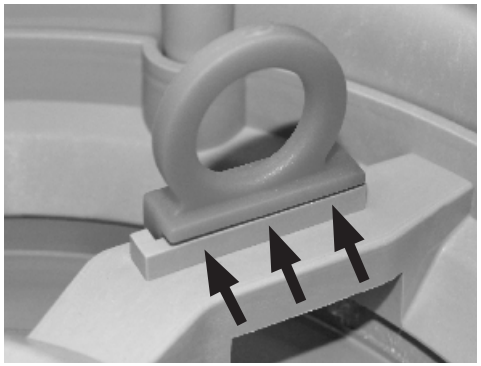

MAINTENANCE

CHANGING THE ESCOVAFLEX IN THE TITANIUM DISPENSER - OPTIONAL

Use a N. 02 Phillip's Head screwdriver to change this.
Unlatch and open the base cover. Then remove the screw.

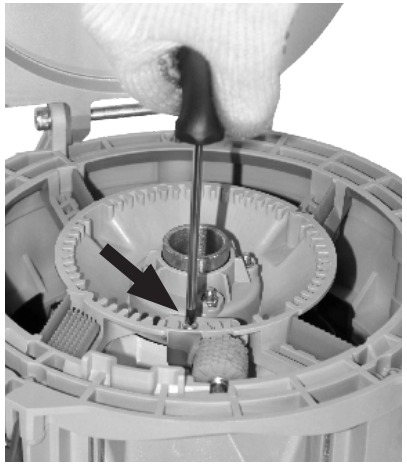

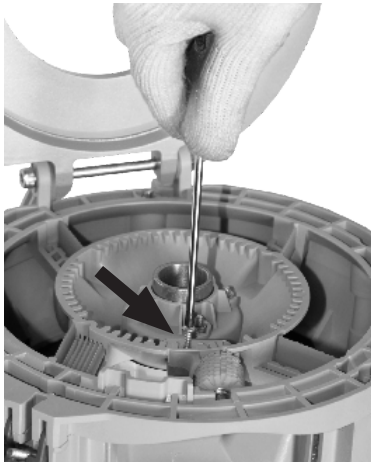

Turn the **ESCOVAFLEX** in the counter-clockwise direction and lift the rear part diagonally.

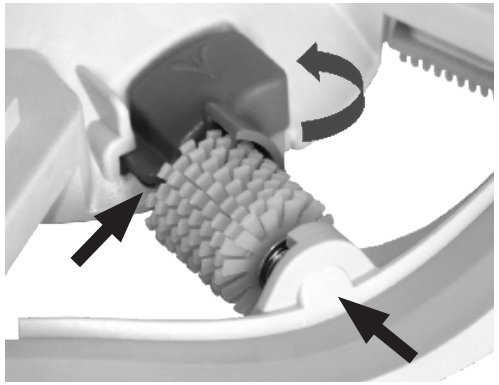

NOTE: The side support must fit in the base.

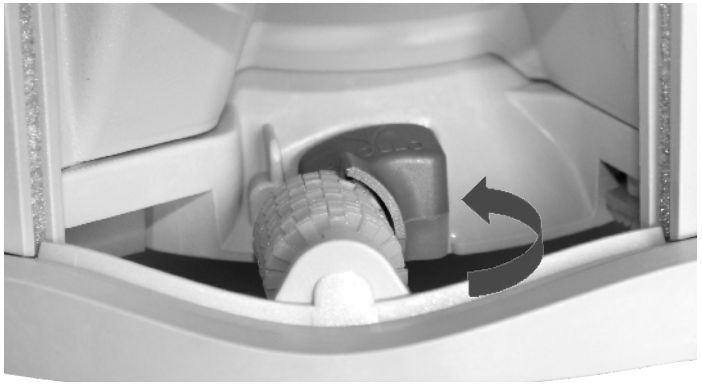

ESCOVAFLEX also fits in the base, however when replacing a used one for a new, make sure it is properly fitin.

CHANGING THE BOUNCE PROTECTOR IN THE TITANIUM DISPENSER - OPTIONAL

Use a universal set of pliers to remove the **BOUNCE PROTECTOR.**

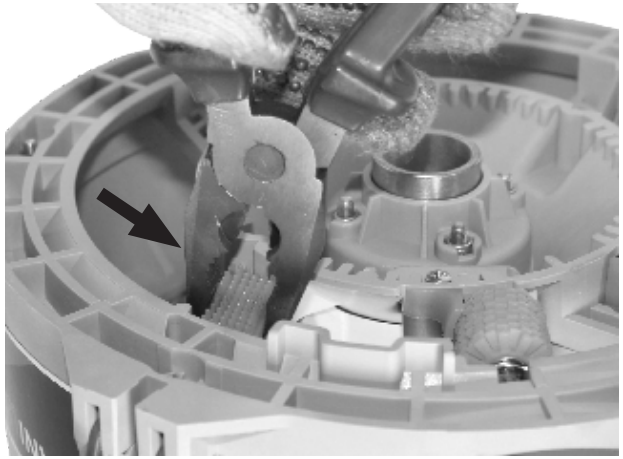

Insert the **BOUNCE PROTECTOR** using a set of pliers inside the box and pull until it fits in the base.

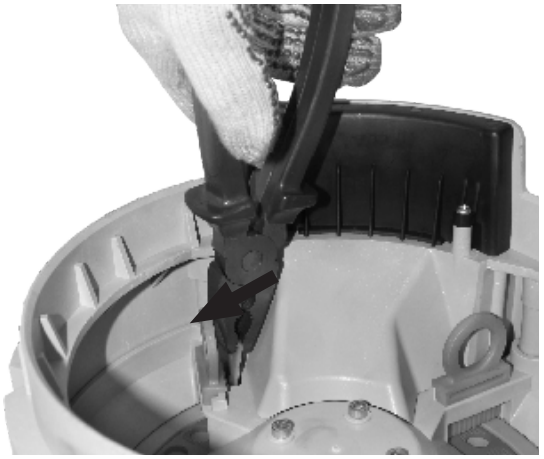

CHANGING THE DISCS AND RINGS IN THE TITANIUM DISPENSER - OPTIONAL

Proceed as follows to change or replace the discs and dispenser rings in the Titanium seeder **(optional)**:

1st Step: Open the latches (1).

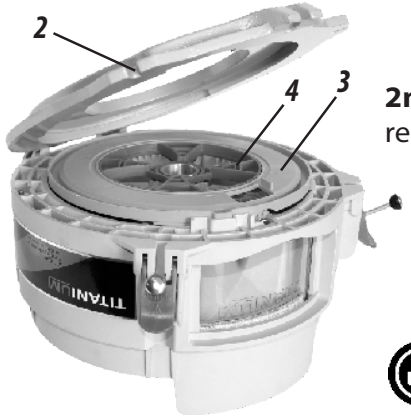

2nd Step: Shake the base cover remove the ring (3) and disc (4).

3rd Step: When installing a new disc certify it is being placed in the right position fit the middle hole of the disc in the centralizing bushing.

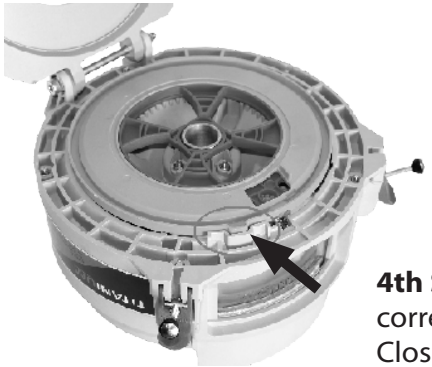

4th Step: Fit the ring adapter in the disc abiding by correct positioning.
Close the base cover, and latch the system

NOTE ***Whenever there are seeds in the storage compartment, remove them before changing the disc and ring, thereby avoiding them from spreading on the ground or blocking the closure of the system.***

PRECAUTIONS IN CLOSING THE TITANIUM DISPENSER - OPTIONAL

If you notice any problems in closing the **TITANIUM** dispenser, follow these steps:

1st Check if the disc and ring are assembled correctly in the housing.
2nd Check if there is any dirt on the base cover of the **TITANIUM** dispenser, if there is any dirt clean it following the instructions on the next page and the manufacturer's manual.
3rd Adjust the latches to facilitate opening the **TITANIUM** dispenser, also lightly tighten when closing.

ATTENTION ***Never leave the latches loose, as these directly impact the ability for planting in cases of loose discs and rings.***

MAINTENANCE

MAINTENANCE

CHANGING RINGS BEFORE EVERY NEW PLANTING SEASON TITANIUM DISPENSER - OPTIONAL

In order to maintain the excellent and efficient operation of the **TITANIUM** dispenser, it is necessary to change the rings before every new planting season, such factors as using graphite and operating hours directly impact this wear. In tests conducted, they have shown that a worn ring can increase the number of double seeds in the same hole in the disc. **See the example of the following ring.**

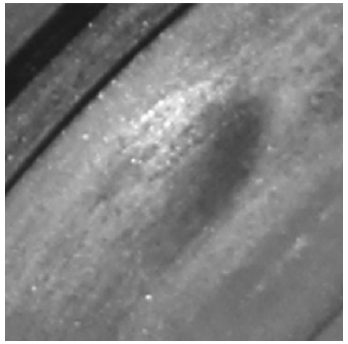

Evident wear in this area can cause double (two seeds dispensed from the same hole in the disc).

NOTE | ***After the crop is planted, disassembly of the TITANIUM dispenser is recommended.***

ATTENTION | ***For further information on the TITANIUM seed dispenser, consult the instruction manual from the manufacturer at the following site: www.assy.com.br***

CLEANING THE TITANIUM DISPENSER - OPTIONAL

After finishing the crop seeding, clean the disc and ring in the housing of the **TITANIUM** dispenser. They must be cleaned using a brush and mild detergent, do not use corrosive products, such as automotive shampoo as well as others.

See the **TITANIUM** dispenser base cover is dirty and encrusted.

Wash using a brush and mild detergent, scrubbing it well to remove all the dirt.

CLEANING THE FERTISYSTEM CONDUCTOR

After the crop season is over, do not leave fertilizer in the storage compartment. Proceed as follows to clean it:

1- Remove the nozzle (1), through the fast coupler (2).

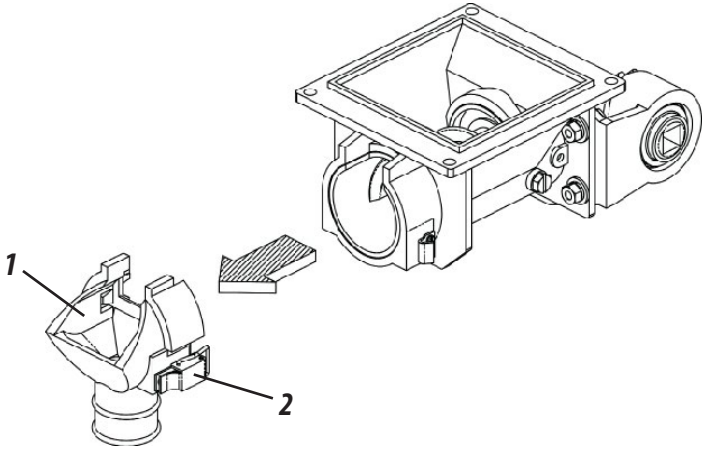

2- Remove the helical spring (3). Pulling it through the ring of the fastening tube (4), also remove the latch ring (5).

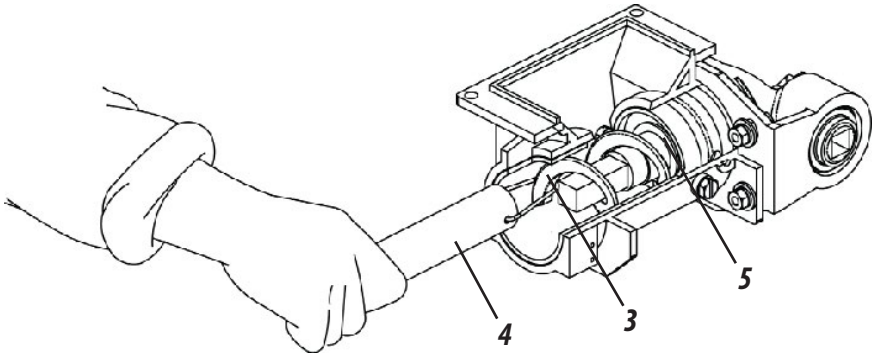

3- After cleaning, replace the helical spring (6), together with the latch ring (7), through the fastening tube (8) make sure that the helical spring (6) and the latch ring (7) are well positioned in the base of the activator axle (10).

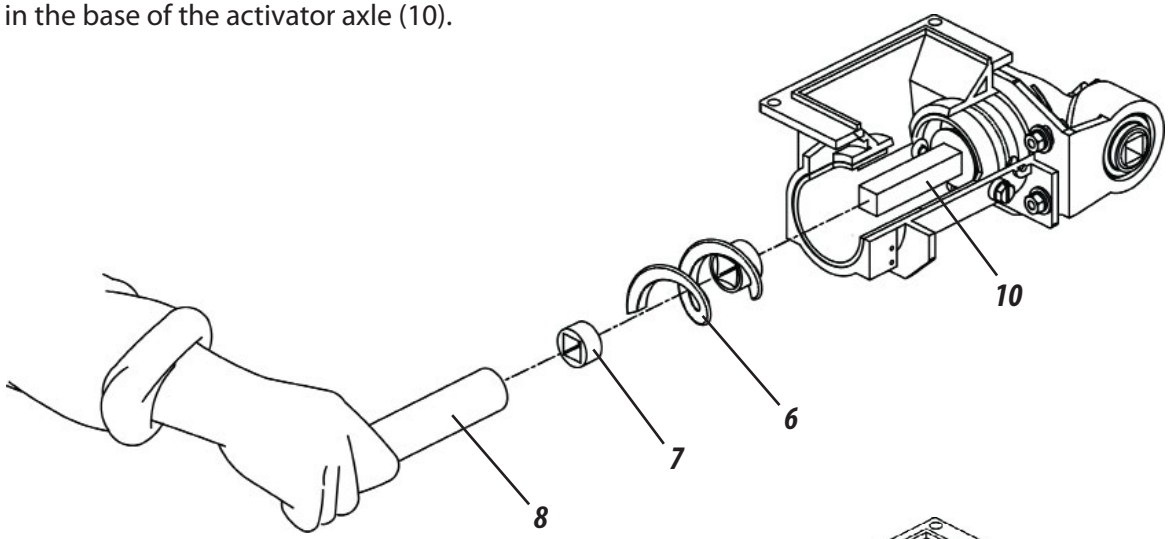

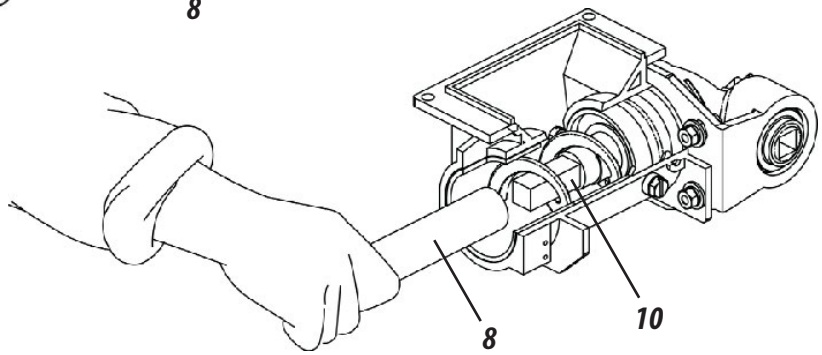

ATTENTION ***Keep the helical spring positioned using the latch ring. This procedure avoids damaging the transversal cover when not using fertilizer in the dispenser or when transporting the seeder. If the latch ring is missing, it can cause serious damage to the spreading and/or transmission systems of the seeder.***

MAINTENANCE

MAINTENANCE TUBE FOR THE FERTISYSTEM CONDUCTOR

The **SP TOPOGRAFIC** seeder when sold with the Fertisystem conductor is supplied with a maintenance tube (1) for performing maintenance or changing the helical spring, and avoids the need for removing the fertilizer storage compartment.

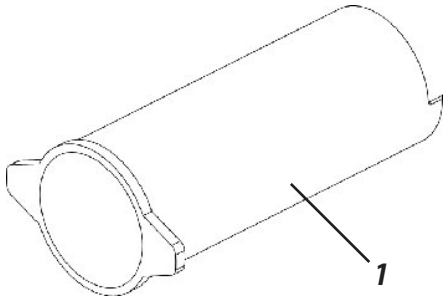

Maintenance Tube
Code: 60203900930

Proceed as follows to perform maintenance on the fertisystem conductor:

1- Remove the discharge nozzle (2) from the fertisystem conductor (3), by releasing the quick release latches (4).

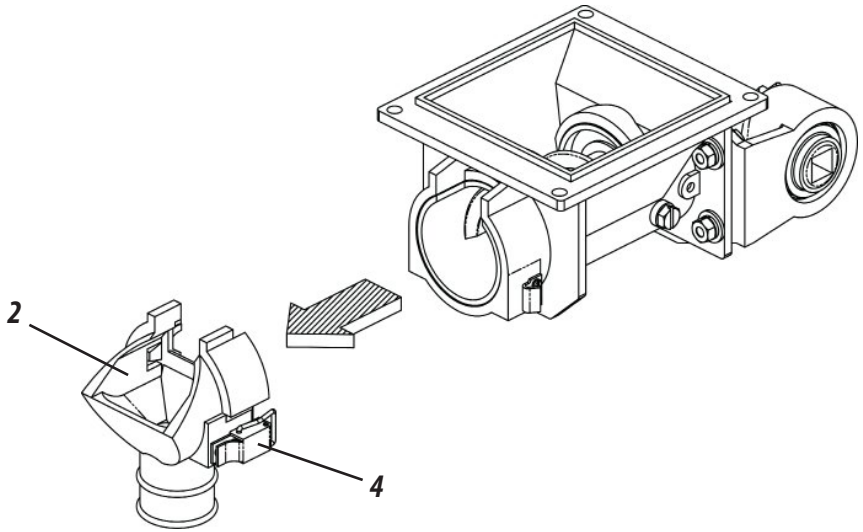

2- Then, insert the maintenance tube (1) in a turning movement, promoting the dislodging of fertilizer even from the bottom of the dispenser. Afterwards perform the necessary maintenance procedures.

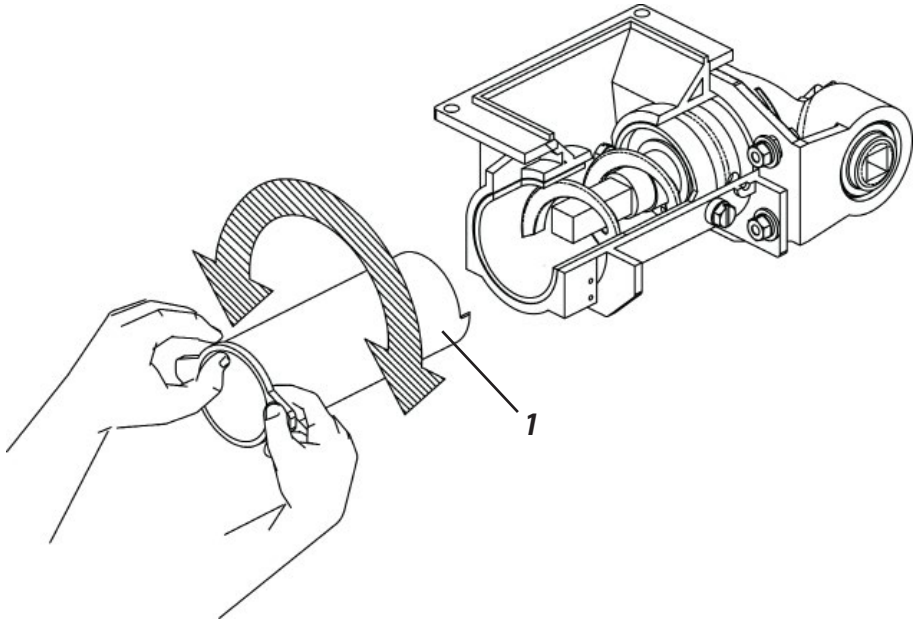

NOTE

The maintenance tube (1) is angled at the end of the tube to facilitate this cleaning procedure.

BLOCKER TUBE FOR/ FERTISYSTEM CONDUCTOR

The **SP TOPOGRAFIC** seeder when sold with the Fertisystem conductor is supplied with a blocker tube when it is necessary to isolate some seeding rows, and then fertilizer spreading does not occur. eading does not occur.

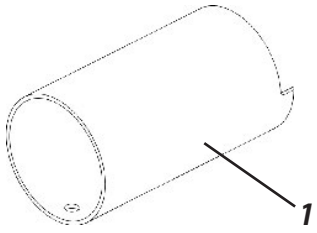

Blocker Tube
Code: 60203900913

So to do that, remove the helical spring (5) and the latch ring (6) from the Fertisystem conductor (3).

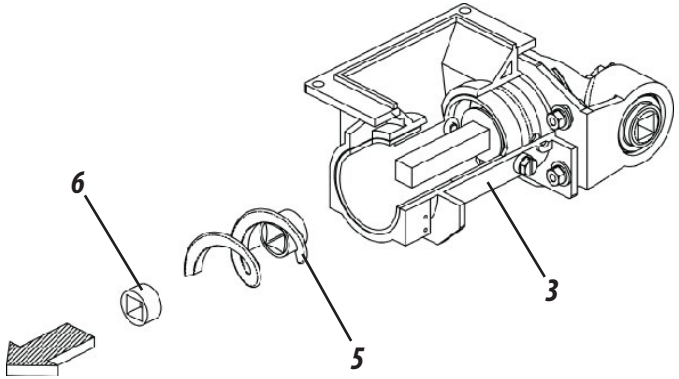

Afterwards, insert the unblocker tube (1) and replace the discharge nozzle (2).

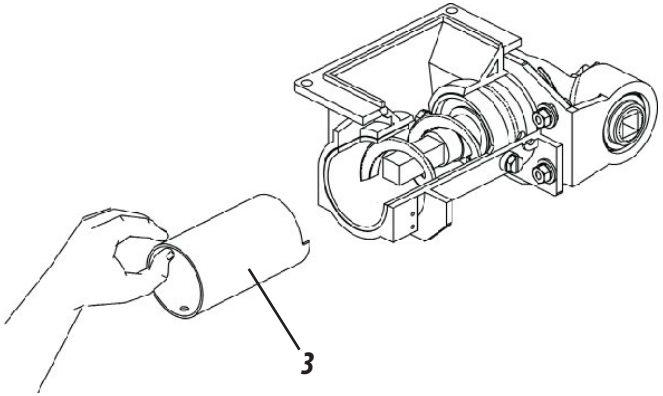

SPRING AND COVERS (OPTIONALS) CONDUTOR FERTISYSTEM

The **SP TOPOGRAFIC** seeder is shipped from the factory with the 2" helical spring mounted, however the seeder is also supplied with a 1" helical spring in its packaging. The seeder can also supplied a ¾" helical spring **(optional)**.

The **SP TOPOGRAFIC** seeder is shipped from the factory with a transversal flow cover **(standard)**, however the seeder can also be supplied with two other models of flow covers **(optional)**.

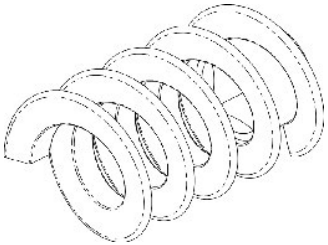

Helical Spring (Pitch 3/4")
Code: 60203700418

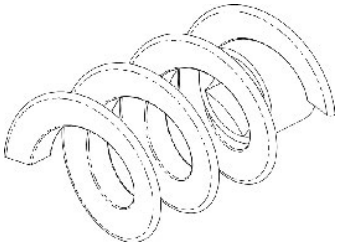

Helical Spring (Pitch 1")
Code: 60203700426

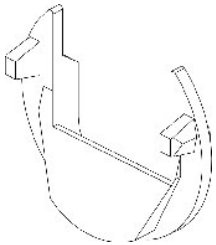

Fertipó Cover
Code: 60203900530

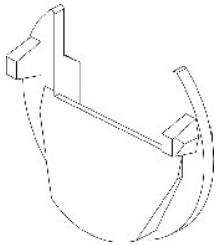

High Flow Cover
Code: 60203900522

NOTE

Always fill the fertilizer storage compartment in the operating location.
This avoids any type of impurity from entering the fertilizer storage compartment.
Perform daily dosage measurements.

MAINTENANCE

MAINTENANCE

CHANGING TIRES

Whenever necessary to change or repair a tire, proceed as follows:

1- First raise the **SP TOPOGRAFIC** from the rear so that it remains stabilized.

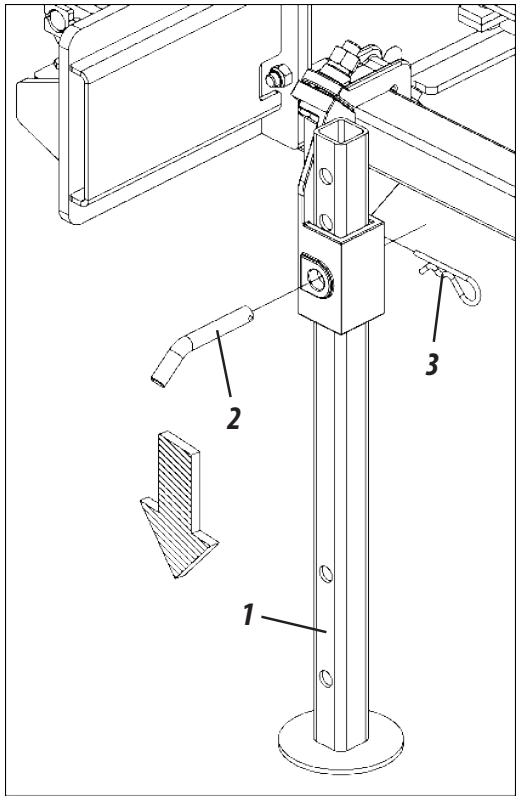

2- Then, lower the support feet (1) in front of the seeder and fasten them using the pin (2) and latch (3).

3- After that, latch the clamp (4) in the wheel support (5) using the screws (6), lock washer (7) and nut (8).

4- Following that, completely retract the hydraulic cylinder supporting the tire on the ground.

5- Finally, remove the chain (9), remove the nuts (10) and latch (11) for removing the tire.

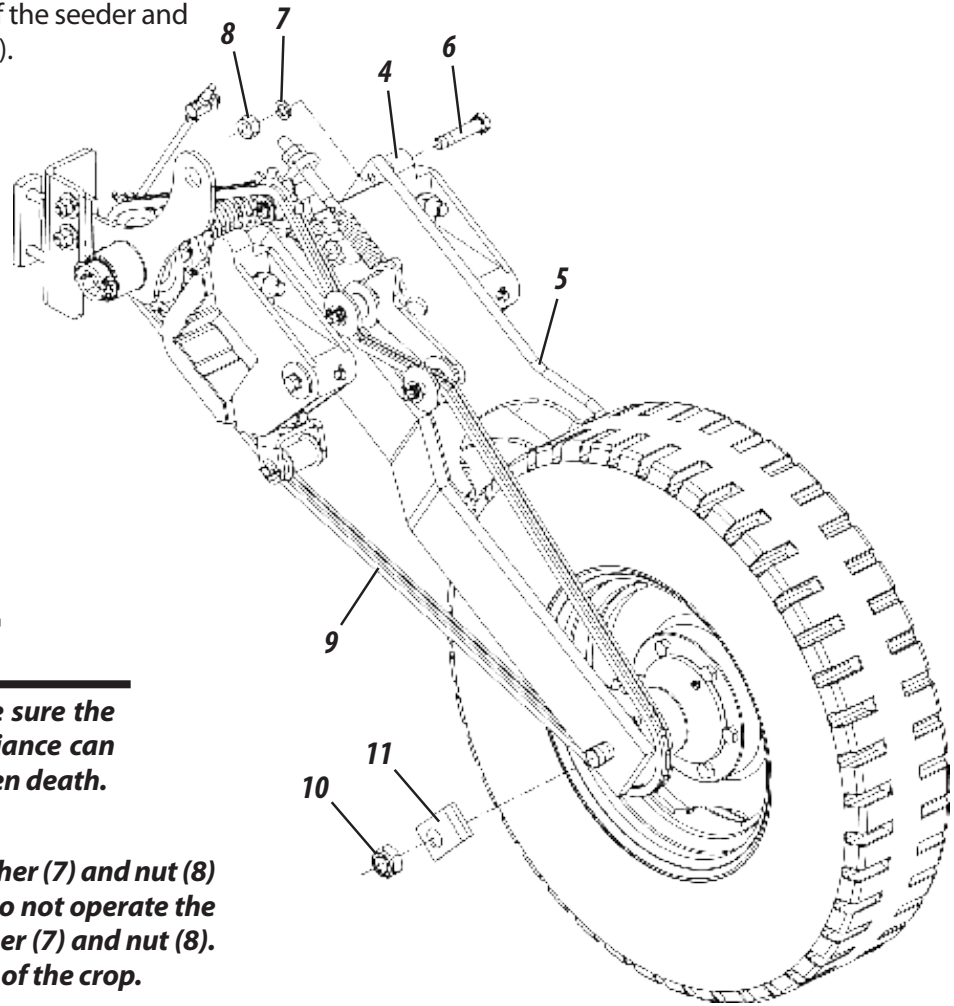

IMPORTANT

Before changing or repairing a tire, make sure the seeder is properly supported. Non-compliance can cause serious damages, accidents, and even death.

ATTENTION

After changing the tire, remove the screw (6), lock washer (7) and nut (8) loosening the clamp (4) from the wheel support (5). Do not operate the seeder without first removing the screw (6), lock washer (7) and nut (8). Ignoring this warning can cause failure in the seeding of the crop.

The **SP TOPOGRAFIC** seeder has options that can be purchased according to the need for work. Among the options available are the hydraulic system without line marker (1) and the hydraulic system with line marker (2).

HYDRAULIC SYSTEM WITHOUT/ ROW MARKER (TABLE 14)

Model	Codes
SP TOPOGRAFIC 4500	55280108110
SP TOPOGRAFIC 5500	55280107890
SP TOPOGRAFIC 6500	55280107890
SP TOPOGRAFIC 7500	55280107667
SP TOPOGRAFIC 8500	-
SP TOPOGRAFIC 9500	55280108064

Table 14

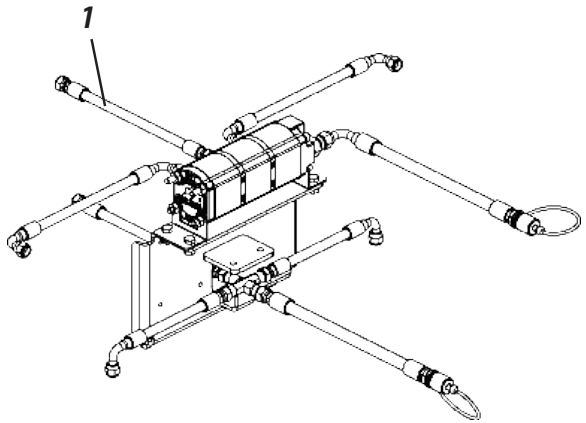

HYDRAULIC SYSTEM WITH / ROW MARKER (TABLE 15)

Model	Codes
SP TOPOGRAFIC 4500	55280108099
SP TOPOGRAFIC 5500	55280107904
SP TOPOGRAFIC 6500	55280108315
SP TOPOGRAFIC 7500	55280107874
SP TOPOGRAFIC 8500	-
SP TOPOGRAFIC 9500	55280108072

Table 15

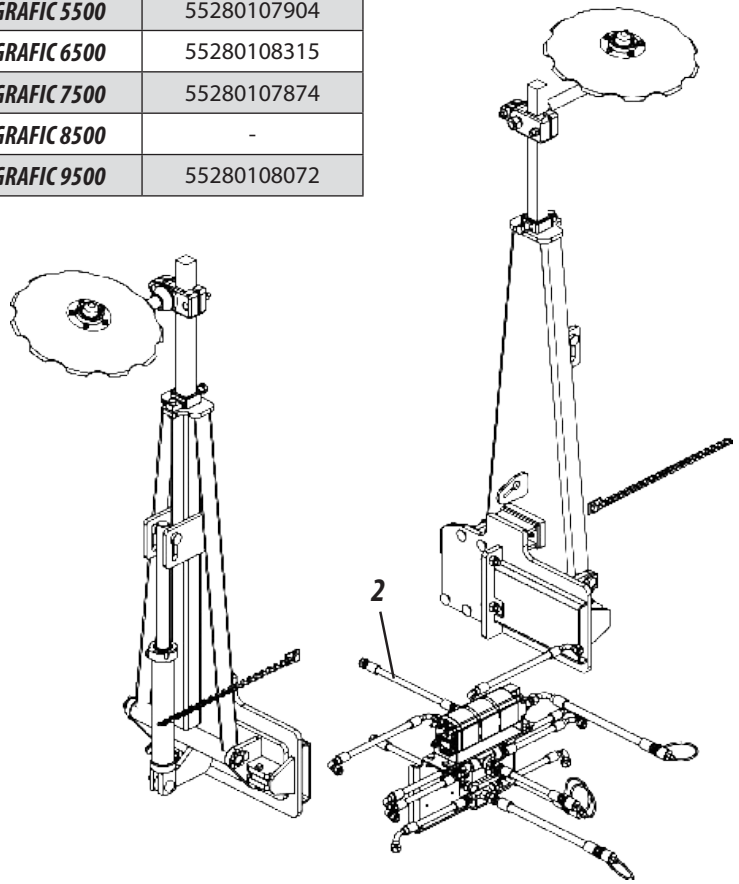

OPTIONAL

OPTIONAL

The **SP TOPOGRAFIC** seeder has options that can be purchased according to the need for work. Within the options available are:

ETD SYSTEM
(ELECTRONIC DOSING TABLE)

SP TOPOGRAFIC can be purchased optionally with the **ETD** (Electronic Dosing Table) system. The **ETD** is an electronic device that can be connected to planters, seeders and fertilizers to assist the operator in setting the best gear ratio so that the correct dosage of seeds and fertilizers occurs, according to the needs of each area / plot, based on the adjustments previously done in the field and calibrations before planting. It allows to perform other additional functions such as the registration of planted hectares, hours actually worked and planting speeds above specified, and this important information is recorded and shown on the **ETD** electronic device display.

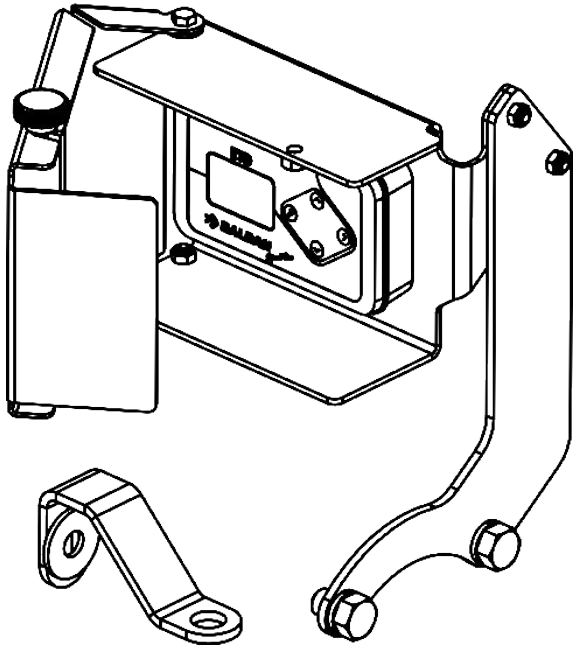

ETD (ELECTRONIC DOSING TABLE)

ATTENTION | ***To use the ETD (Electronic Dosing Table), refer to the instruction manual on the following pages.***

OPERATION MANUAL ETD (ELECTRONIC DOSING TABLE) - OPTIONAL

• Presentation

The **ETD** is an electronic device that can be connected to planters, seeders and fertilizers to assist the operator in setting the best gear ratio so that the correct dosage of seeds and fertilizers occurs, according to the needs of each area / plot, based on the adjustments previously done in the field and calibrations before planting. It allows to perform other additional functions such as the registration of planted hectares, hours actually worked and planting speeds above specified, and this important information is recorded and shown on the **ETD** electronic device display.

OPERATION MANUAL ETD (ELECTRONIC DOSING TABLE) - OPTIONAL

• Mounting the magnets on the main axis

The magnets (1) must be installed on the planter's primary axis, after the shutdown ratchet, as this will not count hours and hectares when the machine is in transport. A magnet must be installed on each face of the shaft (3), securing them with two nylon clamps (4) so that they are properly fixed and positioned (4).

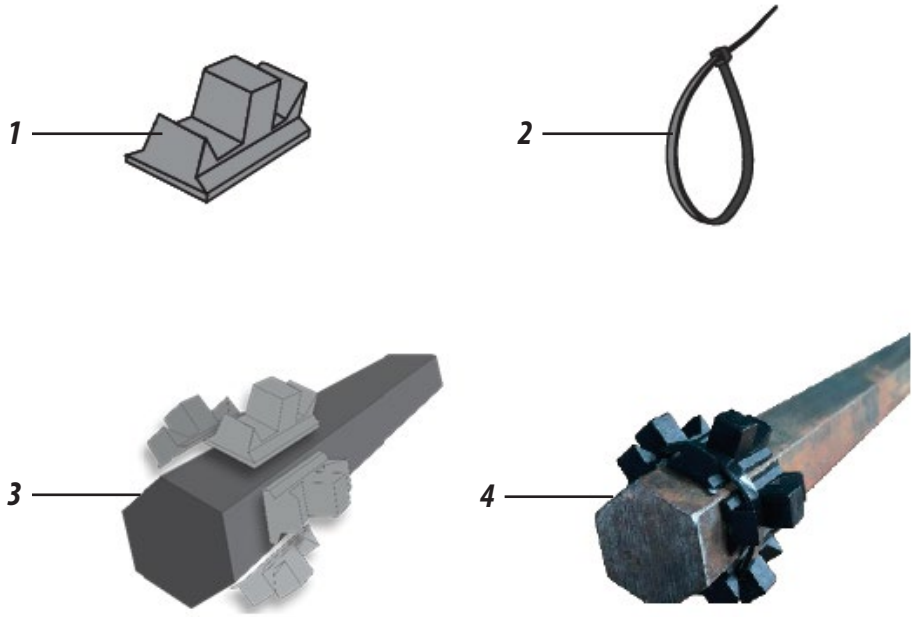

• Mounting the speed sensor

Mount the sensor (1) on the support (2) fixing by the nuts (3) according to the image (4).

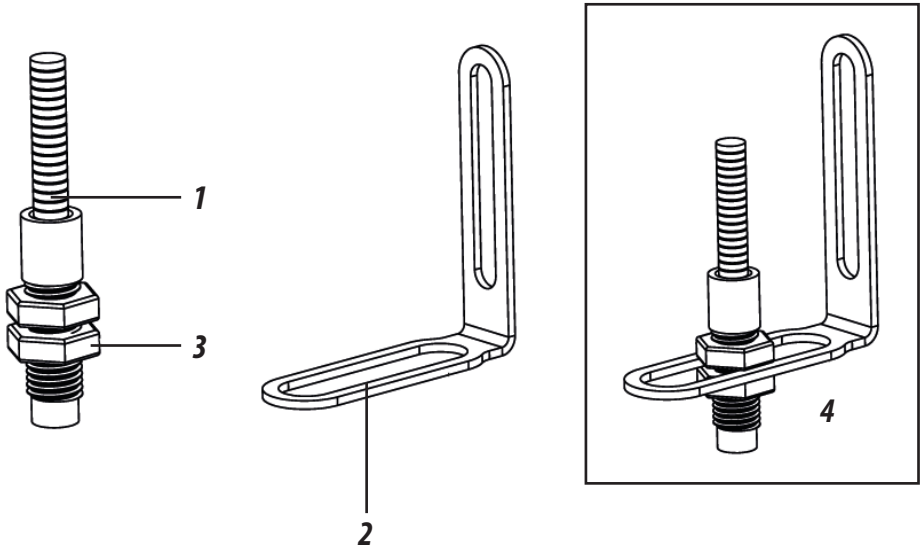

OPERATION MANUAL ETD (ELECTRONIC DOSING TABLE) - OPTIONAL

• Speed sensor installation

Attach the sensor support (1) to the machine chassis (2) using the M8x30 screw (3) making sure that the distance between the sensor and the magnets is less than 3 mm (4). It is extremely important to align the speed sensor and the magnets on the primary axis (5).

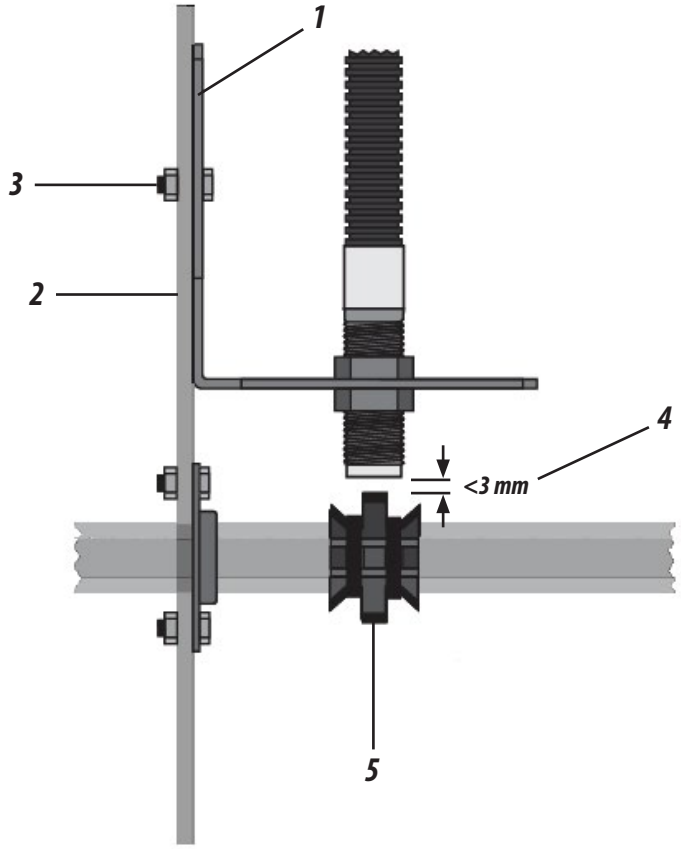

• Identification

A - Display
B - Function key
C - Decrease item
D - Enter
E - Increase item

The ETD has four keys
Function key F **The Function key F is used to change between the four main functions of the ETD, which are:** **F1: Seed rate** **F2: Fertilizer rate** **F3: Hour meter** **F4: Hectometer** **Within the menus, the Function F key assumes the "back" function, which facilitates navigation.**

Keys
The ▼ and ▲ keys are used to increase or decrease numeric items in the interface. The icon with arrows above and bellow the interface indicates the item to be controlled by the keys. 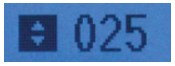   **Keys ▶** **The key ▶ is used as a "enter" function. This key allows you to enter the options that are shown in the lower right corner of the interface.**

• Settings menu

The settings menu (1) can be accessed through the Function key F, when pressed for more than 2 seconds.

The settings menu has 7 items. The keys ▲▼ (2) are used to navigate between menu items.

The Select key. ▶ (3) is used to select the highlighted item. Just click on the "F" key (4) to exit the settings menu.

To select the start of the calibration click 'Yes' ▶ (1).

• Sensor calibration

When starting the sensor calibration (2), the machine must be moved for exactly 100 meters (3) and stopped.

The number of pulses (4) counted by the sensor is shown on the screen. To complete the calibration, the operator must press the ▶ (5) "Ready" key.

The calibration of the sensor is important for the ETD to determine the number of hectares worked, the working speed of the machine and also the distance covered in the fertilizer calibration.

If, during displacement, the number of pulses corresponding to the end of the 100m is not displayed, the displacement of the sensor or magnets may have occurred, making it impossible to read the pulses during the displacement. In this case, it is necessary to adjust these components according to the assembly diagram, item 4 "INSTALLING THE SPEED SENSOR", previous page.

OPERATION MANUAL ETD (ELECTRONIC DOSING TABLE) - OPTIONAL

• Machine

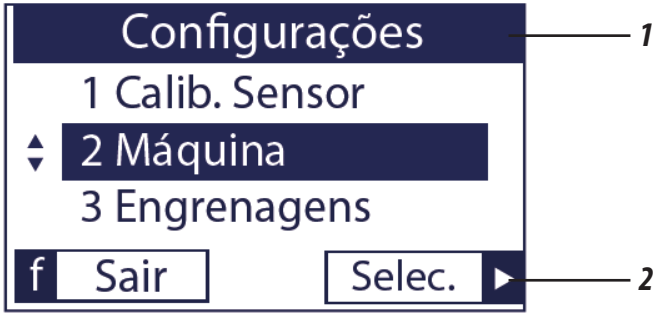

In the machine configuration (1), click on 'Select' ▶ (2) to inform the number of lines using the buttons ▲▼ (3).

Number of lines, range of values: 01 ~ 80.

After selecting the number of lines contained in the machine, press the 'Prox' ▶ key (4) to select the line spacing using the buttons ▲▼ (5).

• Sensor machine

When clicking on "Save" ▶ (6), the system saves the settings and displays the following message.

This information is very important for the presentation of the worked hectares and also for the calibration of fertilizer rates.

OPERATION MANUAL ETD (ELECTRONIC DOSING TABLE) - OPTIONAL

• Seed rate - Part I

1) Select Seed Rate and click Select.

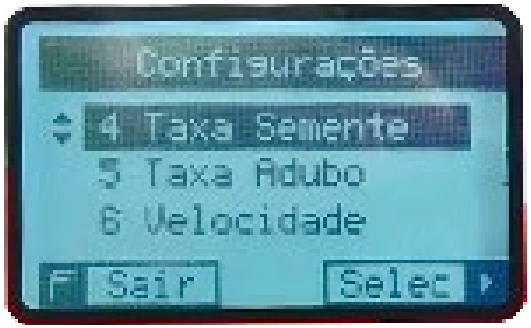

2) Then select CD Gears and click Select.

3) Then, keep the list below.

4) Click Fn to save.

5) Then select CD Gears and click Select.

6) Then select Seed Rate and click Select.

OPERATION MANUAL ETD (ELECTRONIC DOSING TABLE) - OPTIONAL

• Seed rate - Part II

7) Then select Change Disk and click Select.

8) Then, enter the number of holes in the disc according to the culture to be worked.

9) Then click save.

10) Then select Register Table and click Select.

11) IMPORTANT: Look in the physical table of Seed on the disk that will work and choose the average value. **Example:** B1.

12) Then type B1 and click Next.

• Seed rate - Part III

13) Then, keep the CxD Relationship and click next.

14) Then, keep the number of holes previously placed and click next.

15) **NOTE:** Note that the seed rate value 4.9 corresponds to the B1 ratio of the SPEED BOX table; if different, redo the previous steps.

16) Then, when the value is correct, click save.

Then, select Fn (exit) and go to the FERTILIZER settings according to the instructions on the following pages.

OPERATION MANUAL ETD (ELECTRONIC DOSING TABLE) - OPTIONAL

• Fertilizer rate

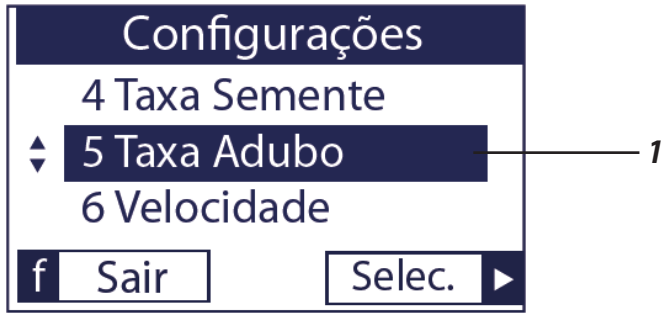

Screen F2 (1) indicates the fertilizer rate (2) in kg per hectare obtained with a specific gear ratio. Fertilizer rates are calculated according to the fertilizer calibration, the gear configuration (3) and the line spacing. The keys ▼and ▲(4) allow the user to navigate between the rate options in Kg / ha.

Taxa Adubo: ETD

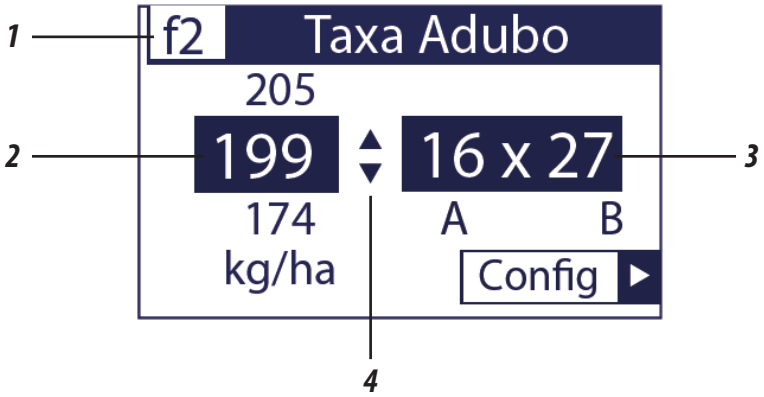

The fertilizer rate menu has two items: Total Calculation (5) and Calibrate Fertilizer (6).

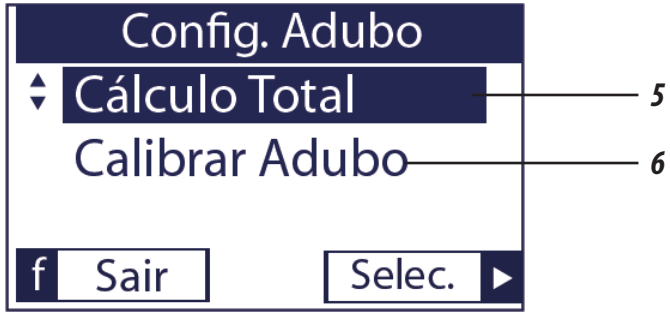

• Total calculation

In total calculation (5), the user can calculate the amount of total fertilizer in tons (8) required for planting a certain area, in hectares. The last fertilizer rate selected on the F2 function screen (9), selected using the key ▲▼ (10) is used as a reference for the calculation.

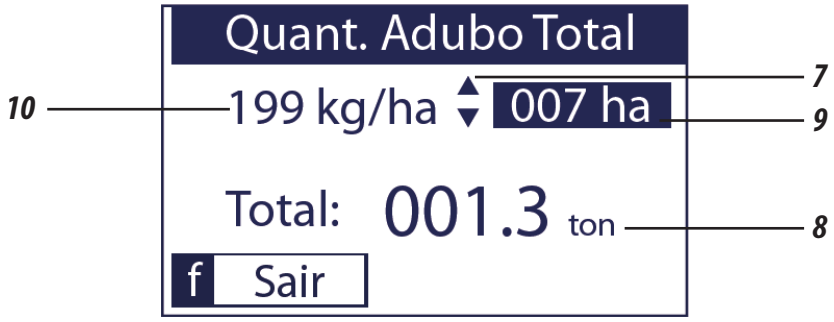

• Calibrate fertilizer - Part I

The fertilizer calibration (11) has 3 steps. First, you must inform the gear ratio (12) used on the machine at the time of calibration. **EXAMPLE:** In the SPEED BOX, configure the option Mot 6 and Mov F, then enter the same configuration in the **ETD**; then walk 50 m collecting at least 3 fertilizer outlets, make the average and enter the value in the electronic table).

On the next screen, the operator must walk with the machine collecting the fertilizer over a distance greater than 50 meters (1). It is important that the sensor is already calibrated so that the distance covered is measured correctly. The distance traveled is displayed instantly (2).

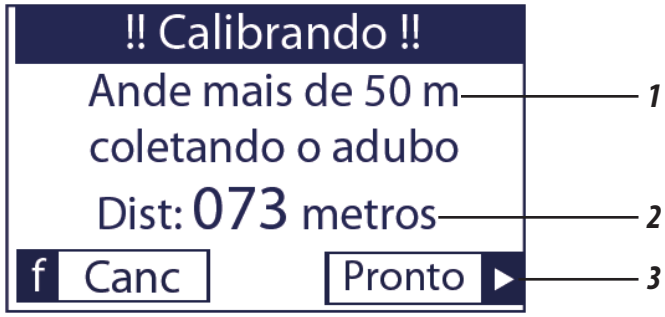

After covering the required distance, click on Ready (3).

NOTE: The minimum distance to be covered is 50 meters, if this distance is insufficient, the screen for entering the weight of the collection will not be enabled and the following warning will be displayed:

OPERATION MANUAL ETD (ELECTRONIC DOSING TABLE) - OPTIONAL

• Calibrate fertilizer - Part II

On the next screen (1), the total weight of the collected fertilizer (2) in a row or the average of the collection, always in grams, is reported.

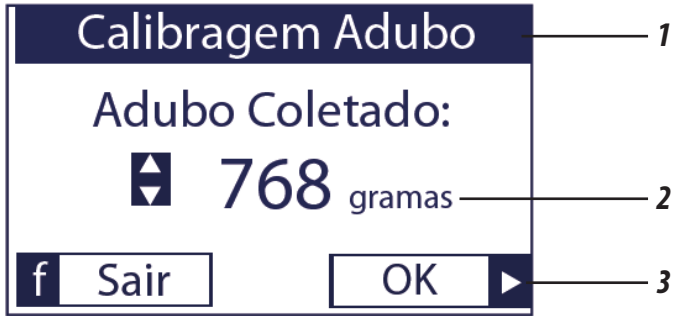

Compost collected, range of values: 10 ~ 9000 grams.

Clicking 'OK' (3) the 'calibration complete' message is displayed.

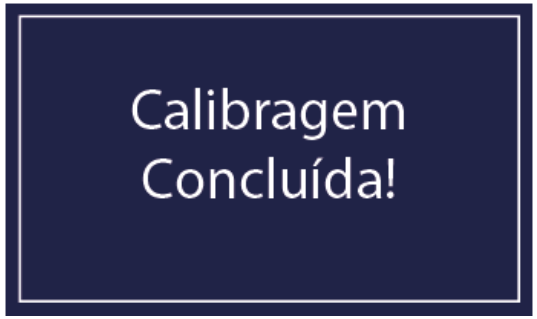

• F3 Hour meter

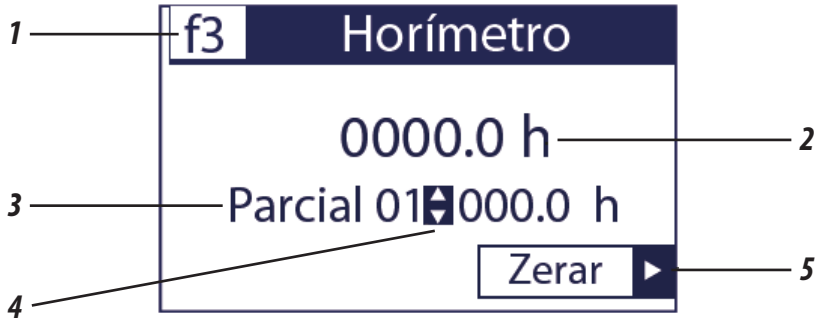

The F3 screen (1) indicates the total number of hours (2) of work with the ETD in three partials (3), which can be related to the keys ▲▼ (4).

To reset a certain partial, the Reset key (5) must be held down for more than 2 seconds.

The hours counted refer only to the time that the machine was in effective work, that is, with the ratchet on. Thus, hours of handling the ETD or traveling with the machine in the transport position will not be counted.

• F4 Hectometer

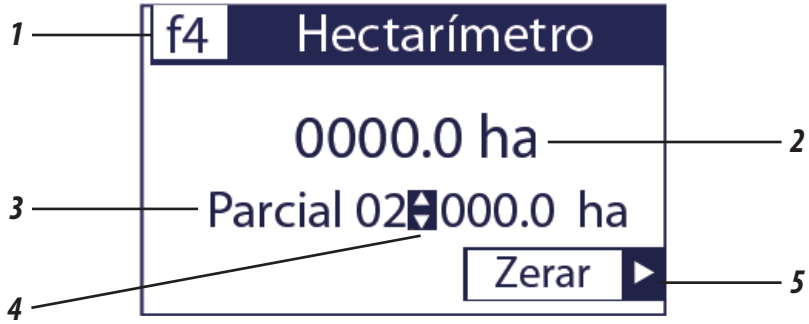

The F3 screen (1) indicates the total number of hours (2) of work with the ETD in three partials (3), which can be related to the keys ▲▼ (4).

• Settings menu - Part I

The settings menu (1) can be accessed through the Function key F, when pressed for more than 2 seconds.

The settings menu has 7 items. The keys ▲▼ (2) are used to navigate between menu items.

The Select key. ▶ (3) is used to select the highlighted item. Just click on the “F” key (4) to exit the settings menu.

OPERATION MANUAL ETD (ELECTRONIC DOSING TABLE) - OPTIONAL

• Settings menu - Part II

To select the start of the calibration click 'Yes' ▶ (1).

• Sensor calibration

When starting the sensor calibration (2), the machine must be moved for exactly 100 meters (3) and stopped.

The number of pulses (4) counted by the sensor is shown on the screen. To complete the calibration, the operator must press the ▶ (5) "Ready" key.

The calibration of the sensor is important for the ETD to determine the number of hectares worked, the working speed of the machine and also the distance covered in the fertilizer calibration.

If, during displacement, the number of pulses corresponding to the end of the 100m is not displayed, the displacement of the sensor or magnets may have occurred, making it impossible to read the pulses during the displacement. In this case, it is necessary to carry out the adjustment of these components according to the assembly diagram, item 4 "INSTALLING THE SPEED SENSOR", page 89.

OPERATION MANUAL ETD (ELECTRONIC DOSING TABLE) - OPTIONAL

• Machine

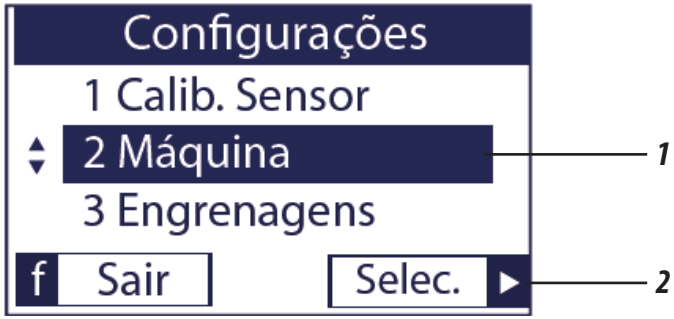

In the machine configuration (1), click on 'Select' ▶ (2) to inform theo number of lines using the buttons ▲▼ (3).

Number of lines, range of values: 01 ~ 80.

After selecting the number of lines contained in the machine, press the 'Prox' ▶ key (4) to select the line spacing using the buttons ▲▼ (5).

Espaçamento, faixa de valores: 01 ~ 99 cm.

When clicking on "Save" ▶ (6), the system saves the settings and displays the following message.

This information is very important for the presentation of the worked hectares and also for the calibration of fertilizer rates.

- **Time above maximum speed**

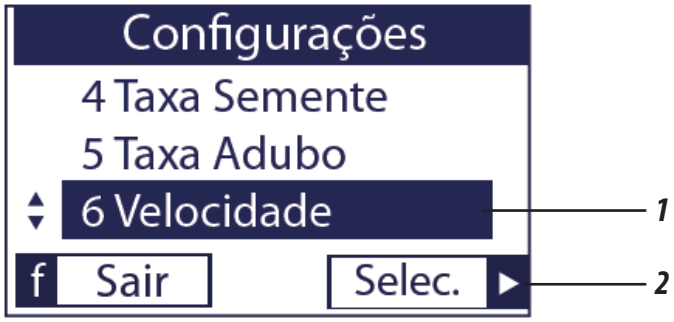

Clicking on 'Select.' ▶ (2) in the 'Speed' setting (1) will show how many hours (4) the machine has been working above the limit speed (3).

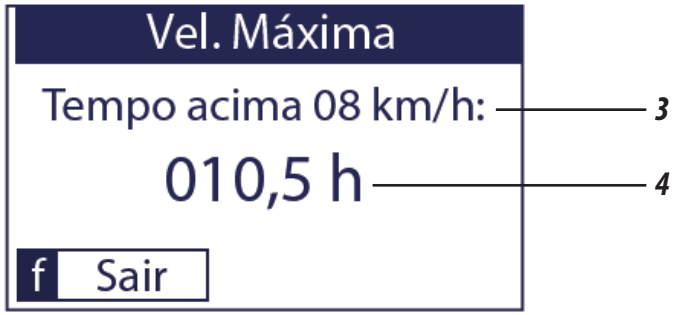

IDENTIFICATION

PRODUCT IDENTIFICATION

1- In order to consult the parts catalog or to request technical assistance from Baldan, always identify the model (1), serial number (2) and date of manufacture (3), which is located on the identification label (4) of the seeder.

2- **ALWAYS DEMAND ORIGINAL BALDAN PARTS.**

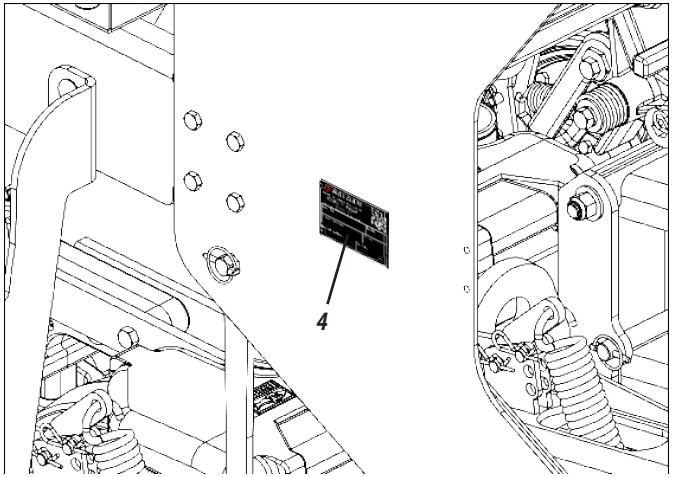

Identify the following data so that you will always have correct information available on the life of your seeder.

Owner: _____

Reseller: _____

Farm: _____

City: _____ *State:* _____

Certificate of Warranty No.: _____

Model: _____

Serial No.: _____

Date of purchase: _____ *Invoice No.:* _____

ATTENTION

The drawings in this Instruction Manual are merely illustrative. In order to provide a better overview and detailed instructions, some drawings have been removed from the manual, as well as safety shielding devices (covers, shields, etc.). Never operate the seeder without installing these devices.

PUBLICATIONS

Code: 60550106844
CPT: SPTG13121B

CONTACT

In case of any doubts/questions, consult After-Sales.
Telephone: 0800-152577
E-mail: posvenda@baldan.com.br

NOTES

NOTES

CERTIFICATE OF WARRANTY

BALDAN IMPLEMENTOS AGRÍCOLAS S/A ensures the dealer normal performance of the implement for a period of six (6) months as of the delivery date on the retail invoice to the first final consumer. During this period, **BALDAN** undertakes to repair defects in material and/or of manufacture of its liability, including labor, freight and other expenses of the dealer's liability.

In the warranty period, request and replacement of eventual defective parts shall be made to the dealer of the area, who will submit the faulty piece for **BALDAN** analysis.

When this procedure is not possible and the resolving capacity of the dealer is exhausted, the dealer will request the support of **BaALDAN Technical Assistance** through a specific form distributed to dealers. After analyzing the replaced items by Baldan Technical Assistance, and concluding that it is not a warranty, then the dealer will be responsible for the costs related to the replacement; as well as material expenses, travel including accommodation and meals, accessories, lubricant used and other expenses arising from the call out to Technical Assistance, and Baldan company is authorized to carry the respective invoice in the name of the resale. Any repair carried in the product within the dealer warranty deadline will only be authorized by **BALDAN** upon previous budget presentation describing parts and work to be performed.

The product is excluded from this term if it is repaired or modified by representatives not belonging to the **BALDAN** dealer network, as well as the application of non--genuine parts or components to the user's product. This warranty is void where it is found that the defect or damage is caused by improper use of the product, failure to follow instructions or inexperience of the operator.

It is agreed that this warranty does not cover tires, polyethylene tanks, cardan, hydraulic components, etc., which are equipment guaranteed by their manufacturers. Manufacturing and/or material defects, object of this warranty term, will not constitute, under any circumstances, grounds for termination of a purchase agreement, or for indemnification of any nature.

BALDAN reserves the right to change and/or perfect the technical characteristics of its products, without previous notice, and without obligation to proceed in the same way with the products previously manufactured.

INSPECTION AND DELIVERY CERTIFICATE

- **SERVICE BEFORE DELIVERY:** This implement was carefully prepared by the sale organization, with all its parts inspected according to the manufacturing prescriptions.
- **DELIVERY SERVICE:** The user was informed about the current warranty terms and instructed on the usage maintenance precautions.
- I confirm that the user has been informed about the current warranty terms and instructed on the usage maintenance precautions.

Implement: _____

Serial Number: _____

Date: _____ *Tax Number:* _____

Dealer: _____ *City:* _____

State: _____ *CEP:* _____

Owner: _____ *Telephone:* _____

Address: _____ *Number:* _____

City: _____ *State:* _____

E-mail: _____

Sale Date: _____

Signature / Dealer Stamp _____

1st copy - Ower

CERTIFICATE

CERTIFICATE

INSPECTION AND DELIVERY CERTIFICATE

- **SERVICE BEFORE DELIVERY:** This implement was carefully prepared by the sale organization, with all its parts inspected according to the manufacturing prescriptions.
- **DELIVERY SERVICE:** The user was informed about the current warranty terms and instructed on the usage maintenance precautions.
- I confirm that the user has been informed about the current warranty terms and instructed on the usage maintenance precautions.

Implement: _____

Serial Number: _____

Date: _____ *Tax Number:* _____

Dealer: _____ *City:* _____

State: _____ *CEP:* _____

Owner: _____ *Telephone:* _____

Address: _____ *Number:* _____

City: _____ *State:* _____

E-mail: _____

Sale Date: _____

Signature / Dealer Stamp _____

2nd copy - Dealer

INSPECTION AND DELIVERY CERTIFICATE

- **SERVICE BEFORE DELIVERY:** This implement was carefully prepared by the sale organization, with all its parts inspected according to the manufacturing prescriptions.
- **DELIVERY SERVICE:** The user was informed about the current warranty terms and instructed on the usage maintenance precautions.
- I confirm that the user has been informed about the current warranty terms and instructed on the usage maintenance precautions.

Implement: _____

Serial Number: _____

Date: _____ *Tax Number:* _____

Dealer: _____ *City:* _____

State: _____ *CEP:* _____

Owner: _____ *Telephone:* _____

Address: _____ *Number:* _____

City: _____ *State:* _____

E-mail: _____

Sale Date: _____

Signature / Dealer Stamp _____

3rd copy - Manufacture

Please send completed within 15 days.

1.74.05.0059-5

AC MATÃO
ECT/DR/SP

RESPONSE CARD

NO STAMPING IS REQUIRED

THE STAMP WILL BE PAID BY:

BALDAN

BALDAN IMPLEMENTOS AGRÍCOLAS S/A.

Av. Baldan, 1500 | Nova Matão | CEP: 15993-900 | Matão-SP | Brasil
Phone: (0**16) 3221-6500 | Fax: (0**16) 3382-6500
Home Page: www.baldan.com.br | e-mail: sac@baldan.com.br
Export: Phone: 55 16 3321-6500 | Fax: 55 16 3382-4212 | 3382-2480
e-mail: export@baldan.com.br

BALDAN

Avenida Baldan, 1500
Nova Matão
15.993-900
Matão/SP - Brasil
sac@baldan.com.br
export@baldan.com.br

+55 16 3221 6500
baldan.com.br