Parts
Catalog

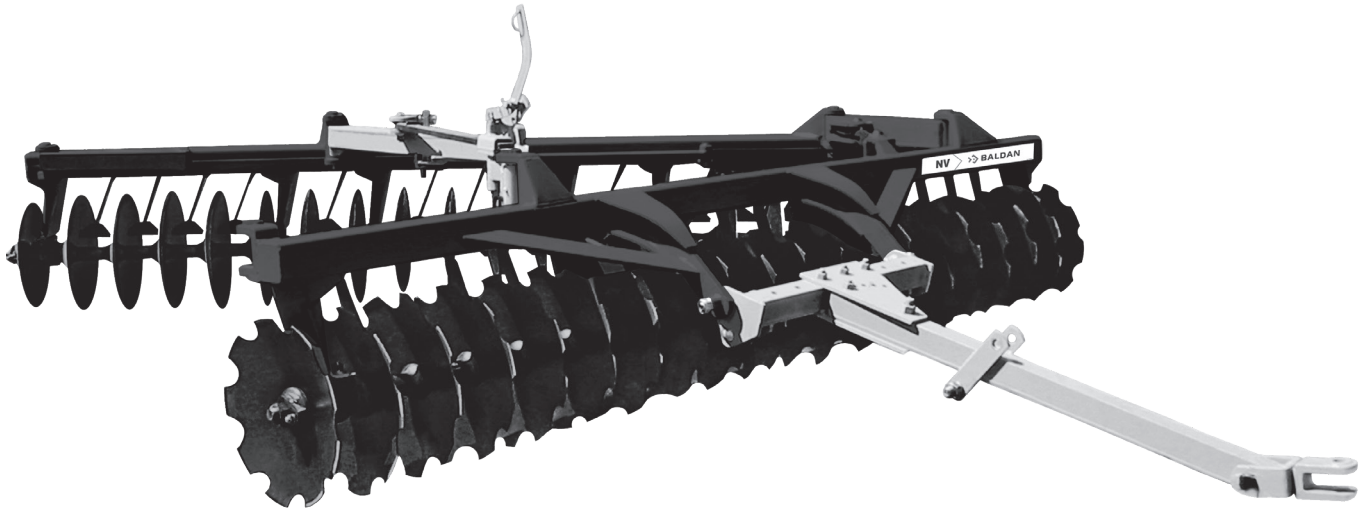

NV

Drag Type Leveling Disc Harrow

BALDAN

Index

NV Mechanical Opening (Spacing 175mm) 4
Table NV Mechanical Opening (Spacing 175mm) 5
NV Mechanical Opening (Spacing 200mm) 6
Table NV Mechanical Opening (Spacing 200mm) 7
NV Hydraulic Opening(Spacing 175mm) 8
Table NV Hydraulic Opening(Spacing 175mm) 9
NV Hydraulic Opening (Spacing 200mm) 10
Table NV Hydraulic Opening (Spacing 200mm) 11
Hitch Drawbar (Mechanical Opening) 12
Hitch Drawbar (Hydraulic Opening) 12
Hitch Transversal Bar 13
Complete Regulator 13
Complete Lock Handle 14
Hydraulic Cylinder 14
Rear Gang NV Spacing 175mm Mechanical Opening 15
Rear Gang NV Spacing 200mm Mechanical Opening 15
Rear Gang NV Spacing 200mm Hydraulic Opening 16
Rear Gang NV Spacing 175mm Hydraulic Opening 16
Discs Section (Spacing 175mm) 17
Discs Section (Spacing 200mm) 18
Grease Bearing (Spacing 175mm) 19
Grease Bearing (Spacing 200mm) 19
Oil Bearing (Radial) Spacing 175 mm 20
Oil Bearing (Radial) Spacing 200 mm 20
Axial Bearing (Spacing 175 mm) 21
Friction Bearing(Spacing 175 mm) 21
Stickers 22

• NV Mechanical Opening (Spacing 175mm)

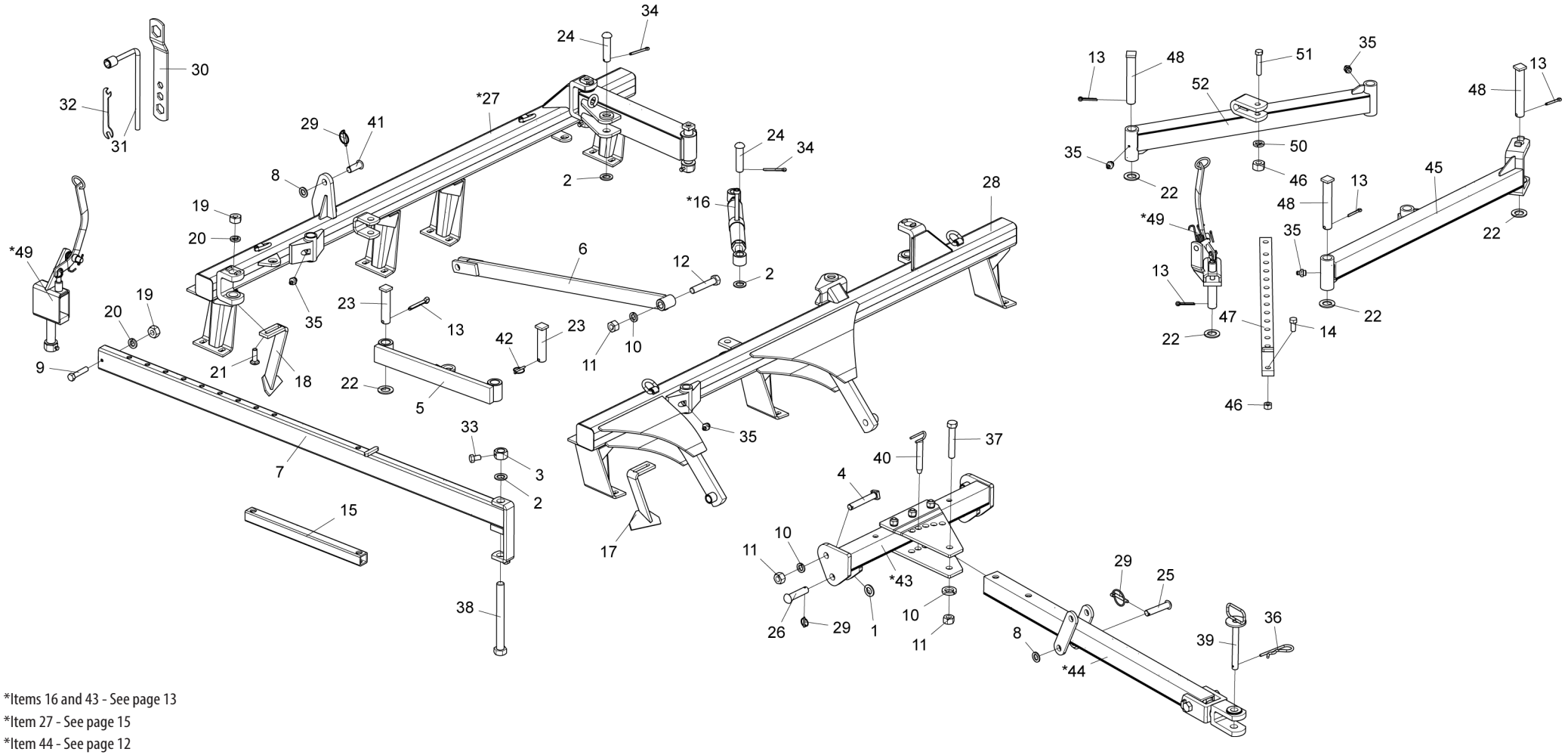

*Items 16 and 43 - See page 13
*Item 27 - See page 15
*Item 44 - See page 12
*Item 49 - See page 14

• Table NV Mechanical Opening (Spacing 175mm)

Item	Code	Product description	All	NV 28 Disco	NV 32 Disco	NV 36 Disco	NV 40 Disco	NV 42 Disco	NV 44 Disco	NV 48 Disco	NV 52 Disco	NV 56 Disco
1	5024010192-8	Smooth Washer Ø30 X Ø52 X 4,75mm(Galvanised)		2	2	2	7	2	2			
2	5024010061-1	Smooth Washer Ø33,5 X Ø53,5 X 4,75mm		3	3	2	2	2	2	2	2	2
2	5024010061-1	Smooth Washer Ø33,5 X Ø53,5 X 4,75mm		4	4	2	2	2	2	2	2	2
3	5456010022-4	Hexagonal Nut 1.1/4" 7F Unc Gr5 Key.2" With Hole R.3/8"		1	1							
4	5420070044-1	Square Head Bolt 1" X 155mm 8F Unc 1A Gr5 Rp	2									
5	5558010347-1	Lateral Lock Nv 28 A 36 Dics		1	1	1						
5	5558010004-9	Lateral Lock					1	1	1			
6	5530010771-0	Support Of Drawbar		1	1	1	1	1	1			
7	5558070009-7	Adjustment Lock		1	1							
8	5024010039-5	Smooth Washer Ø26,2 X Ø44 X 4,75mm		2	2	2		2	2			
9	6020312300-3	Hexagonal Head Bolt 1/2" X 2.1/2" 12F W Gr5 Rp		1	1							
10	6020010420-2	Pressure Washer 1" Media Industry		1	1	1	1	1	1	1	1	3
10	6020010420-2	Pressure Washer 1" Media Industry		5	3	3	3	3	3	1	1	3
11	6020310778-4	Hexagonal Nut 1" 8F Unc Gr5 Ch.1.5/8" Height 25,00mm		3	3	3	3	3	3	3	3	3
11	6020310778-4	Hexagonal Nut 1" 8F Unc Gr5 Ch.1.5/8" Height 25,00mm		4	4	4	5	4	4	3	3	3
12	6020311136-6	Hexagonal Head Bolt 1" X 5.1/2" 8F Unc1A Gr5 Rp	1									
13	6020050122-8	Cotterpin 3/8" X 2.1/2"		1	1	4	4	4	4	4	4	4
14	6020311093-9	Hexagonal Head Bolt 3/4" X 1.3/4" 10F Unc1A Gr5 Rt				1	1	1	1	1	1	1
15	5552010161-5	Tube Of Lock					1	1	1			
*16	5484010065-3	Complete Regulator	1									
17	5352050050-9	Front Scraper (Special (Without R)		10	11	13	13	14	15	17	18	20
18	5352050051-7	Rear Scraper (Special (Without R)		10	11	13	13	14	15	17	18	20
19	6020310754-7	Hexagonal Nut 1/2" 12F W Gr5 Ch.7/8" Height 12,00mm		41	45	52	52	56	60	68	72	80
20	6020010410-5	Pressure Washer 1/2" Media Industry		40	44	52	52	56	60	68	72	80
21	6020310143-3	French Head Bolt 1/2" X 1.5/8" 12F W Gr2 Rt Special		40	44	52	52	56	60	68	72	80
22	5024010130-8	Smooth Washer Ø39 X Ø66 X 4,75mm(Galvanised)		1	1	4	4	4	4	4	4	3
23	5432040014-0	Square Head Pin Ø37,5 X 150mm		2	2	2	2	2	2			
24	5432120080-2	French Head Pin Ø30,53 X 106mm		2	2							
24	6020310639-7	French Head Pin Ø30,53 x 106mm	2									
24	5432120029-2	French Head Pin Ø30,53 X 113mm		2	2	1	1	2	2			
24	5432120090-0	French Head Pin Ø30,53 X 97mm				1	1					
25	5432120089-6	French Head Pin Ø1" X 117mm		1	1	1		1	1			
26	5432120108-6	French Head Pin Ø28 X 105mm		2	2	2	2	2	2			
*27	5022013149-9	Rear Gang Nv-28 Discs Spacing 175mm Without Piston Complete		1								
*27	5022013155-3	Rear Gang Nv-28 Discs Spacing 175mm W/Hydraulic Transport		1								
*27	5022013129-4	Rear Gang Nv-32 Discs Spacing 175mm With Wheel Without Piston			1							
*27	5022013135-9	Rear Gang Nv-32 Discs Spacing 175mm W/Hydraulic Transport			1							
*27	5022013100-6	Rear Gang Nv-36 Discs Spacing 175mm With Wheel				1						
*27	5022013079-4	Rear Gang Nv-36 Discs Spacing 175mm W/Hydraulic Transport				1						
*27	5022013099-9	Rear Gang NV-40 Discs Spacing 175mm					1					
*27	5022013160-0	Rear Gang Nv-40 Discs Spacing 175mm W/Hydraulic Transport					1					
*27	5022013098-0	Rear Gang NV-42 Discs Spacing 175mm						1				
*27	5022013075-1	Rear Gang Nv-42 Discs Spacing 175mm W/Hydraulic Transport						1				
*27	5022013097-2	Rear Gang Nv-44 Discs Spacing 175mm With Wheel							1			
*27	5022013161-8	Rear Gang Nv-44 Discs Spacing 175mm W/Hydraulic Transport							1			
*27	5022013096-4	Rear Gang Nv-48 Discs Spacing 175mm With Wheel								1		
*27	5022013095-6	Rear Gang Nv-52 Discs Spacing 175mm With Wheel									1	
*27	5022013094-8	Rear Gang Nv-56 Discs Spacing 175mm With Wheel										1

Item	Code	Product description	All	NV 28 Disco	NV 32 Disco	NV 36 Disco	NV 40 Disco	NV 42 Disco	NV 44 Disco	NV 48 Disco	NV 52 Disco	NV 56 Disco
28	5022013147-2	Front Grang Nv-28 Discs Spacing 175mm Without Piston		1								
28	5022013153-7	Front Grang Nv-28 Discs Spacing 175mm W/Hydraulic Transport		1								
28	5022013126-0	Front Gang Nv-32 Discs Spacing 175mm Without Piston			1							
28	5022013133-2	Front Grang Nv-32 Discs Spacing 175mm W/Hydraulic Transport			1							
28	5022013016-6	Front Gang Nv-36 Discs Spacing 175mm Without Wheel				1						
28	5022013112-0	Front Gang Nv-36 Discs Spacing 175mm W/Hydraulic Transport				1						
28	5022013014-0	Front Gang Nv-40 Discs Spacing 175mm Without Wheel					1					
28	5022013111-1	Front Gang Nv-40 Discs Spacing 175mm W/Hydraulic Transport					1					
28	5022013012-3	Front Gang Nv-42 Discs Spacing 175mm Without Wheel						1				
28	5022013110-3	Front Grang Nv-42 Discs Spacing 175mm W/Hydraulic Transport						1				
28	5022013010-7	Front Gang Nv-44 Discs Spacing 175mm Without Wheel							1			
28	5022013109-0	Front Grang Nv-44 Discs Spacing 175mm W/Hydraulic Transport							1			
28	5022013008-5	Front Gang Nv-48 Discs Spacing 175mm Without Wheel								1		
28	5022013006-9	Front Gang Nv-52 Discs Spacing 175mm Without Wheel									1	
28	5022013004-2	Front Grang Nv-56 Discs Spacing 175mm Without Wheel										1
29	6020390293-2	Lock Ø5,75 X 40mm		4	4	4	7	4	4			
30	5138090001-0	Wrench For Hexagonal Nut 1.1/4" - 1" - 3/4" - 5/8"	2									
31	5138050005-5	Wrench "L" For Hexagonal Nut 5/8"	1									
32	5138020001-9	Wrench For Hexagonal Nut 3/8" - 1/2"	1									
33	6020311030-0	Hexagonal Head Bolt 3/8" X 5/8" 16F Unc1A Gr2 Rt		1	1	1		1	1			
33	6020310054-2	Hexagonal Head Bolt 3/8" X 1" 16F Unc1A Gr2 Rt		1	1							
34	6020050116-3	Cotterpin 1/4" X 2"		4	4	4	4	4	4	4	4	2
34	6020050116-3	Cotterpin 1/4" X 2"		2	2	2	4	2	2	4	4	2
35	6020130108-7	Grease Fitting 1/8"		2	2	3	3	3	3	3	3	3
35	6020130108-7	Grease Fitting 1/8"		5	13	11	3	3	12	12	14	3
36	6020390308-4	Lock Nma - Type "R" Ø4,5 X 80mm		1	1	1	1	1	1	1	1	4
37	6020311138-2	Hexagonal Head Bolt 1" X 6" 8F Unc1A Gr5 Rp		1	1	1	1	1	1			
38	6020310250-2	Hexagonal Head Bolt 1.1/4" X 12.1/2" 7F Unc1A Gr5 Rp		1	1							
39	5432060023-8	Pin Ø1" X 210mm	1									
40	5432010229-7	Pin Ø1" X 155mm	1									
41	5432120073-0	French Head Pin Ø1" X 62mm		1	1	1	1	1	1			
41	5432120022-5	French Head Pin Ø1" X 90mm					2	2	2			
42	6020390292-4	Lock Ø8 X 54mm		3	3	3	1	1	1			
*43	5040020033-2	Complete Hitch Transversal Bar	1									
*43	5040010135-0	Hitch Transversal Bar For Hydraulic Transport		1	1	1	1	1	1			
*44	5084030011-8	Complete Hitch Drawbar (Mechanic Opening)	1									
*44	5084010046-1	Complete Hitch Drawbar(Hydraulic Transport Without Piston)		1	1	1	1	1	1			
45	5040011238-7	Front Bar (Mechanic Opening)				1	1	1	1	1	1	
45	5040011241-7	Front Bar										1
46	6020310770-9	Hexagonal Nut 3/4" 10F Unc Gr5 Ch.1.7/32" Height 18,50mm		2		2	2	2	2	2	2	2
47	5558070011-9	Adjustment Lock(Compr.1230mm)				1	1	1	1	1	1	1
48	5432040004-2	Square Head Pin Ø37,5 X 220mm		3		3	3	3	3	3	3	3
*49	5468010006-6	Complete Lock Handle		1	1							
*49	5468010016-3	Complete Lock Handle				1	1	1	1	1	1	1
50	6020010414-8	Pressure Washer 3/4" Media Industry		1		1	1	1	1	1	1	1
51	6020311099-8	Hexagonal Head Bolt 3/4" X 4" 10F Unc1A Gr5 Rp		1		1	1	1	1	1	1	1
52	5040011240-9	Rear Stabilizer Bar				1	1	1	1	1	1	
52	5040011242-5	Rear Stabilizer Bar										1

• NV Mechanical Opening (Spacing 200mm)

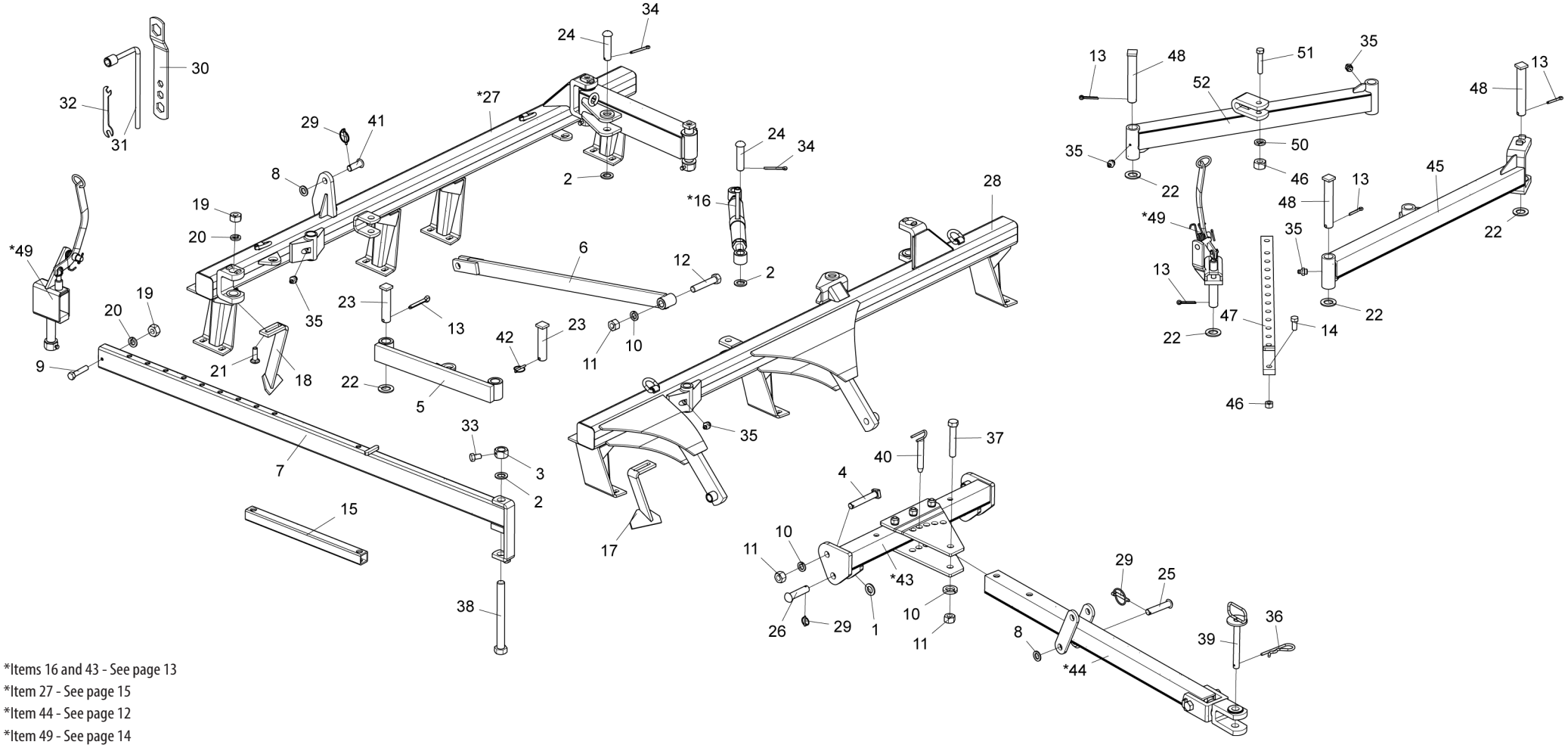

*Items 16 and 43 - See page 13
*Item 27 - See page 15
*Item 44 - See page 12
*Item 49 - See page 14

• Table NV Mechanical Opening (Spacing 200mm)

Item	Code	Product description	All	NV 28 Discs	NV 32 Discs	NV 36 Discs	NV 40 Discs	NV 42 Discs	NV 44 Discs	NV 48 Discs	NV 52 Discs	NV 56 Discs
1	5024010192-8	Smooth Washer Ø30 X Ø52 X 4,75mm(Galvanised)			2	2	2	2	1			
2	5024010061-1	Smooth Washer Ø33,5 X Ø53,5 X 4,75mm		3	3	2	2	2	2	2	2	2
2	5024010061-1	Smooth Washer Ø33,5 X Ø53,5 X 4,75mm		3	3	2	2	2	2	2	2	2
3	5456010022-4	Hexagonal Nut 1.1/4" 7F Unc Gr5 Key.2" With Hole R.3/8"		1	2							
4	5420070044-1	Square Head Bolt 1" X 155mm 8F Unc 1A Gr5 Rp	2									
5	5558010347-1	Lateral Lock Nv 28 A 36 Dics		1								
5	5558010004-9	Lateral Lock			1	1	1	1	1			
6	5530010771-0	Support Of Drawbar		1	1	1	1	1	1			
7	5558070009-7	Adjustment Lock		1	1							
8	5024010039-5	Smooth Washer Ø26,2 X Ø44 X 4,75mm		2	2	2	2	2	2			1
9	6020312300-3	Hexagonal Head Bolt 1/2" X 2.1/2" 12F W Gr5 Rp		1	1							
10	6020010420-2	Pressure Washer 1" Media Industry		1	1	1	1	1	1	1	1	3
10	6020010420-2	Pressure Washer 1" Media Industry		3	3	3	3	3	3	1	1	3
11	6020310778-4	Hexagonal Nut 1" 8F Unc Gr5 Ch.1.5/8" Height 25,00mm	3									
11	6020310778-4	Hexagonal Nut 1" 8F Unc Gr5 Ch.1.5/8" Height 25,00mm		4	4	4	4	4	4	3	3	3
12	6020311136-6	Hexagonal Head Bolt 1" X 5.1/2" 8F Unc1A Gr5 Rp	1									
13	6020050122-8	Cotterpin 3/8" X 2.1/2"		1	1	4	4	4	4	4	4	4
14	6020311093-9	Hexagonal Head Bolt 3/4" X 1.3/4" 10F Unc1A Gr5 Rt				1	1	1	1	1	1	1
15	5552010161-5	Tube Of Lock					1	1	1			
*16	5484010065-3	Complete Regulator	1									
17	5352050050-9	Front Scraper (Special (Without R)		9	11	11	13	14	15	15	17	19
18	5352050051-7	Rear Scraper (Special (Without R)		9	11	11	13	14	15	15	17	19
19	6020310754-7	Hexagonal Nut 1/2" 12F W Gr5 Ch.7/8" Height 12,00mm		37	45	44	52	56	60	60	68	76
20	6020010410-5	Pressure Washer 1/2" Media Industry		36	44	44	52	56	60	60	68	76
21	6020310143-3	French Head Bolt 1/2" X 1.5/8" 12F W Gr2 Rt Special		36	44	44	52	56	60	60	68	76
22	5024010130-8	Smooth Washer Ø39 X Ø66 X 4,75mm(Galvanised)		1	1	4	4	4	4	4	4	3
22	5024010130-8	Smooth Washer Ø39 X Ø66 X 4,75mm(Galvanised)		1	1	4	4	4	4	4	4	3
23	5432040014-0	Square Head Pin Ø37,5 X 150mm		2	2	2	2	2	2			
24	6020310639-7	Square Head Pin Ø30,53 x 106mm	2									
24	5432120029-2	French Head Pin Ø30,53 X 113mm	2									
25	5432120089-6	French Head Pin Ø1" X 117mm		1	1	1	1	1	1			
26	5432120108-6	French Head Pin Ø28 X 105mm		2	2	2	2	2	2			
*27	5022013146-4	Rear Gang Nv-28 Discs Spacing 200mm With Wheel Without Piston		1								
*27	5022013152-9	Rear Gang Nv-28 Discs Spacing 200mm Hydraulic Transport		1								
*27	5022013125-1	Rear Gang Nv-32 Discs Spacing 200mm With Wheel Without Piston			1							
*27	5022013132-4	Rear Gang Nv-32 Discs Spacing 200mm Hydraulic Transport			1							
*27	5022013091-3	Rear Gang Nv-36 Discs Spacing 200mm With Wheel				1						
*27	5022013067-0	Rear Gang Nv-36 Discs Spacing 200mm Hydraulic Transport				1						
*27	5022013090-5	Rear Gang Nv-40 Discs Spacing 200mm With Wheel					1					
*27	5022013065-4	Rear Gang Nv-40 Discs Spacing 200mm Hydraulic Transport					1					
*27	5022013089-1	Rear Gang Nv-42 Discs Spacing 200mm With Wheel						1				
*27	5022013063-8	Rear Gang Nv-42 Discs Spacing 200mm Hydraulic Transport						1				
*27	5022013088-3	Rear Gang Nv-44 Discs Spacing 200mm With Wheel							1			
*27	5022013061-1	Rear Gang Nv-44 Discs Spacing 200mm Hydraulic Transport							1			
*27	5022013087-5	Rear Gang Nv-48 Discs Spacing 200mm With Wheel								1		
*27	5022013086-7	Rear Gang Nv-52 Discs Spacing 200mm With Wheel									1	
*27	5022013085-9	Rear Gang Nv-56 Discs Spacing 200mm With Wheel										1
28	5022013144-8	Front Gang Nv-28 Discs Spacing 200mm Without Piston		1								
28	5022013150-2	Front Gang Nv-28 Discs Spacing 200mm Without Wheel		1								
28	5022013123-5	Front Gang Nv-32 Discs Spacing 200mm Without Piston			1							
28	5022013130-8	Front Gang Nv-32 Discs Spacing 200mm (Transp.Hidr.)			1							
28	5022012998-2	Front Gang Nv-36 Discs Spacing 200mm Without Wheel				1						

Item	Code	Product description	All	NV 28 Discs	NV 32 Discs	NV 36 Discs	NV 40 Discs	NV 42 Discs	NV 44 Discs	NV 48 Discs	NV 52 Discs	NV 56 Discs
28	5022013106-5	Front Gang Nv-36 Discs Spacing 200mm Hydraulic Transport				1						
28	5022012996-6	Front Gang Nv-40 Discs Spacing 200mm Without Wheel					1					
28	5022013105-7	Front Gang Nv-40 Discs Spacing 200mm Hydraulic Transport					1					
28	5022012994-0	Front Gang Nv-42 Discs Spacing 200mm Without Wheel						1				
28	5022013104-9	Front Gang Nv-42 Discs Spacing 200mm Hydraulic Transport						1				
28	5022012992-3	Front Gang Nv-44 Discs Spacing 200mm Without Wheel							1			
28	5022013103-0	Front Gang Nv-44 Discs Spacing 200mm Hydraulic Transport							1			
28	5022012990-7	Front Gang NV-48 Discs Spacing 200mm								1		
28	5022012988-5	Front Gang Nv-52 Discs Spacing 200mm Without Wheel									1	
28	5022012986-9	Front Grang Nv-56 Discs Spacing 200mm Without Wheel										1
29	6020390293-2	Lock Ø5,75 X 40mm		4	4	4	4	4	4			
30	5138090001-0	Wrench For Hexagonal Nut 1.1/4" - 1" - 3/4" - 5/8"	2									
31	5138050005-5	Wrench "L" For Hexagonal Nut 5/8"	1									
32	5138020001-9	Wrench For Hexagonal Nut 3/8" - 1/2"	1									
33	6020311030-0	Hexagonal Head Bolt 3/8" X 5/8" 16F Unc1A Gr2 Rt		1	1	1	1	1	1			
33	6020310054-2	Hexagonal Head Bolt 3/8" X 1" 16F Unc1A Gr2 Rt		1	2							
34	6020050116-3	Cotterpin 1/4" X 2"		4	4	4	4	4	4	4	4	2
34	6020050116-3	Cotterpin 1/4" X 2"		2	2	2	2	2	2	4	4	2
35	6020130108-7	Grease Fitting 1/8"		2	3	3	3	3	3	3	3	3
36	6020390308-4	Lock Nma - Type "R" Ø4,5 X 80mm		1	1	1	1	1	1	1	1	4
37	6020311138-2	Hexagonal Head Bolt 1" X 6" 8F Unc1A Gr5 Rp		1	1	1	1	1	1			
38	6020310250-2	Hexagonal Head Bolt 1.1/4" X 12.1/2" 7F Unc1A Gr5 Rp		1	1							
39	5432060023-8	Pin Ø1" X 210mm	1									
40	5432010229-7	Pin Ø1" X 155mm	1									
41	5432120073-0	French Head Pin Ø1" X 62mm		1	1	1	1	1	1			
41	5432120022-5	French Head Pin Ø1" X 90mm					2	2	2			
42	6020390292-4	Lock Ø8 X 54mm		1	1	1	1	1	1			
*43	5040020033-2	Complete Hitch Transversal Bar	1									
*43	5040010135-0	Hitch Transversal Bar For Hydraulic Transport		1	1	1	1	1	1			
*44	5084030011-8	Complete Hitch Drawbar (Mechanic Opening)	1									
*44	5084010046-1	Complete Hitch Drawbar(Hydraulic Transport Without Piston)		1	1	1	1	1	1			
45	5040040002-1	Front Bar (Mechanic Opening)				1	1	1	1	1	1	
45	5040010291-8	Front Bar										1
46	6020310770-9	Hexagonal Nut 3/4" 10F Unc Gr5 Ch.1.7/32" Height 18,50mm				2	2	2	2	2	2	2
47	5558070011-9	Adjustment Lock(Compr.1230mm)				1	1	1	1	1	1	
47	5558010266-1	Adjustment Lock(Compr.1230mm)										1
48	5432040004-2	Square Head Pin Ø37,5 X 220mm	3									
*49	5468010006-6	Complete Lock Handle		1	1							
*49	5468010016-3	Complete Lock Handle				1	1	1	1	1	1	1
50	6020010414-8	Pressure Washer 3/4" Media Industry				1	1	1	1	1	1	1
51	6020311099-8	Hexagonal Head Bolt 3/4" X 4" 10F Unc1A Gr5 Rp				1	1	1	1	1	1	1
52	5040040001-3	Rear Stabilizer Bar				1	1	1	1	1	1	
52	5040010290-0	Rear Stabilizer Bar										1

• NV Hydraulic Opening(Spacing 175mm)

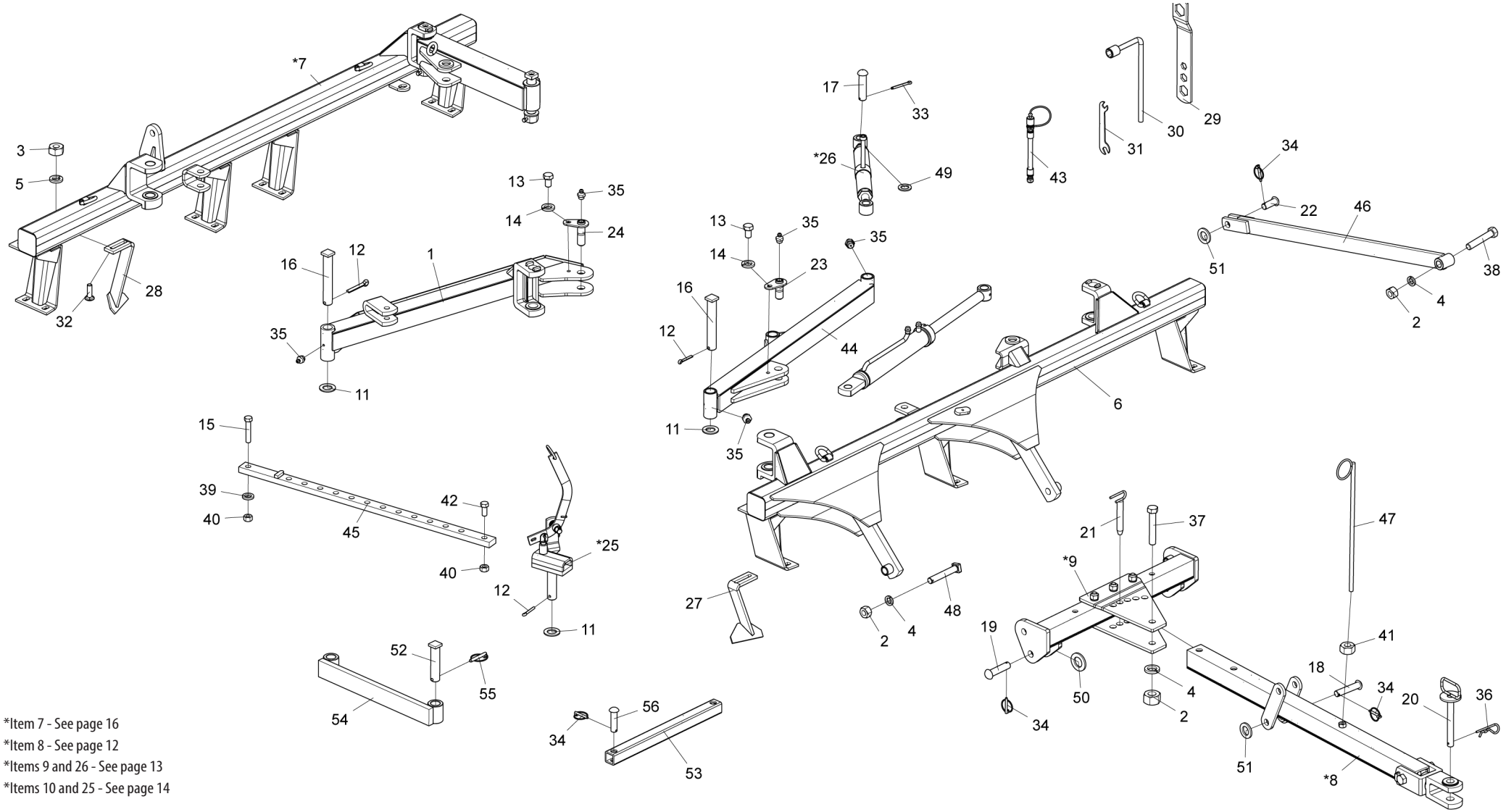

*Item 7 - See page 16
*Item 8 - See page 12
*Items 9 and 26 - See page 13
*Items 10 and 25 - See page 14

• Table NV Hydraulic Opening(Spacing 175mm)

Item	Code	Product description	All	NV 28 Discs	NV 32 Discs	NV 36 Discs	NV 40 Discs	NV 42 Discs	NV 44 Discs	NV 48 Discs	NV 52 Discs	NV 56 Discs
1	5040011237-9	Rear Stabilizer Bar		1	1							
1	5040011235-2	Rear Stabilizer Bar(Hydraulic Opening)				1	1	1	1	1	1	
1	5040011228-0	Rear Stabilizer Bar										1
2	6020310778-4	Hexagonal Nut 1" 8F Unc Gr5 Ch.1.5/8" Height 25,00mm	3									
2	6020310778-4	Hexagonal Nut 1" 8F Unc Gr5 Ch.1.5/8" Height 25,00mm		4	4	4	4	4	4			
3	6020310754-7	Hexagonal Nut 1/2" 12F W Gr5 Ch.7/8" Height 12,00mm		41	45	52	52	56	60	68	72	80
3	6020310754-7	Hexagonal Nut 1/2" 12F W Gr5 Ch.7/8" Height 12,00mm		40	45	52	52	56	60			
4	6020010420-2	Pressure Washer 1" Media Industry	1									
4	6020010420-2	Pressure Washer 1" Media Industry		4	5	4	4	4	4	1	1	3
5	6020010410-5	Pressure Washer 1/2" Media Industry		40	45	52	52	56	60	68	72	80
6	5022013020-4	Front Grang Nv-28 Discs Spacing 175mm With Piston		1								
6	5022013114-6	Front Grang Nv-28 Discs Spacing 175mm With Piston W/ Transport		1								
6	5022013018-2	Front Gang Nv-32 Disc Spacing 175mm Without Wheel W/Piston			1							
6	5022013158-8	Front Grang Nv-32 Discs Spacing 175mm W/Pist W/Transport			1							
6	5022120176-8	Front Gang Nv-36 Disc Spacing 175mm Without Wheel				1						
6	5022010990-6	Front Gang Nv-36 Discs Spacing 175mm W/Hydraulic Transport				1						
6	5022120096-6	Front Gang Nv-40 Disc Spacing 175mm Without Wheel					1					
6	5022010987-6	Front Gang Nv-40 Discs Spacing 175mm W/Hydraulic Transport					1					
6	5022120104-0	Front Gang Nv-42 Disc Spacing 175mm Without Wheel						1				
6	5022010932-9	Front Grang Nv-42 Discs Spacing 175mm W/Hydraulic Transport						1				
6	5022120097-4	Front Gang Nv-44 Disc Spacing 175mm Without Wheel							1			
6	5022010929-9	Front Grang Nv-44 Discs Spacing 175mm W/Hydraulic Transport							1			
6	5022120177-6	Front Gang Nv-48 Disc Spacing 175mm Without Wheel								1		
6	5022120106-7	Front Gang Nv-52 Disc Spacing 175mm Without Wheel									1	
6	5022010868-3	Front Grang Nv-56 Discs Spacing 175mm Without Wheel										1
*7	5022013102-2	Rear Gang Nv-28 Discs Spacing 175mm With Piston Complete		1								
*7	5022013083-2	Rear Gang Nv-28 Discs Spacing 175mm Transport W/Piston		1								
*7	5022013101-4	Rear Gang Nv-32 Disc Spacing 175mm With Wheel With Piston			1							
*7	5022013081-6	Rear Gang Nv-32 Disc Spacing 175mm W/Piston W/ Transport			1							
*7	5022090396-3	Rear Gang Nv-36 Disc Spacing 175mm With Wheel				1						
*7	5022010992-2	Rear Gang Nv-36 Discs Spacing 175mm W/Hydraulic Transport				1						
*7	5022090397-1	Rear Gang NV-40 Discs Spacing 175mm					1					
*7	5022010989-2	Rear Gang Nv-40 Discs Spacing 175mm W/Hydraulic Transport					1					
*7	5022090398-0	Rear Gang NV-42 Discs Spacing 175mm						1				
*7	5022010934-5	Rear Gang Nv-42 Discs Spacing 175mm W/Hydraulic Transport						1				
*7	5022090399-8	Rear Gang Nv-44 Disc Spacing 175mm With Wheel							1			
*7	5022010931-0	Rear Gang Nv-44 Discs Spacing 175mm W/Hydraulic Transport							1			
*7	5022090400-5	Rear Gang Nv-48 Disc Spacing 175mm With Wheel								1		
*7	5022090401-3	Rear Gang Nv-52 Disc Spacing 175mm With Wheel									1	
*7	5022010867-5	Rear Gang Nv-56 Disc Spacing 175mm With Wheel										1
*8	5084010059-3	Hitch Drawbar(Hydraulic Transport W/Piston)		1	1	1	1	1	1			
*8	5084030024-0	Hitch Drawbar With Piston	1									
*9	5040010135-0	Hitch Transversal Bar For Hydraulic Transport		1	1	1	1	1	1			
*9	5040020033-2	Complete Hitch Transversal Bar	1									
*10	6020055723-1	Hydr. Cylinder "O.D" Ø1.5/8" X Ø2.1/2" X 346mm(C) X 680mm(C)	1									
11	5024010130-8	Smooth Washer Ø39 X Ø66 X 4,75mm(Galvanised)		4	4	4	4	4	4	4	4	3
11	5024010130-8	Smooth Washer Ø39 X Ø66 X 4,75mm(Galvanised)		4	1	1	1	1	1	4	4	3
12	6020050122-8	Cotterpin 3/8" X 2.1/2"	4									
13	6020310183-2	Hexagonal Head Bolt 5/8" X 1" 11F Unc1A Gr2 Rt	2									

Item	Code	Product description	All	NV 28 Discs	NV 32 Discs	NV 36 Discs	NV 40 Discs	NV 42 Discs	NV 44 Discs	NV 48 Discs	NV 52 Discs	NV 56 Discs
14	6020010412-1	Pressure Washer 5/8" Media Industry	2									
15	6020311099-8	Hexagonal Head Bolt 3/4" X 4" 10F Unc1A Gr5 Rp	1									
16	5432040004-2	Square Head Pin Ø37,5 X 220mm	3									
17	6020310639-7	Square Head Pin Ø30,53 x 106mm	2									
17	5432120090-0	French Head Pin Ø30,53 X 97mm					1					
18	5432120089-6	French Head Pin Ø1" X 117mm			1	1	1	1	1			
19	5432120108-6	French Head Pin Ø28 X 105mm		2	2	2	2	2	2			
20	5432060023-8	Pin Ø1" X 210mm	1									
21	5432010229-7	Pin Ø1" X 155mm	1									
22	5432120073-0	French Head Pin Ø1" X 62mm		1	1	1	1	1	1			
23	5432080013-0	Lock Pin Ø31 X 70mm Without Grease Fitting(Hydraulic Opening)	1									
24	5432080008-3	Lock Pin Ø31 X 95mm Without Grease Fitting(Hydraulic Opening)	1									
*25	5468010016-3	Complete Lock Handle	1									
*26	5484010065-3	Complete Regulator	1									
27	5352050050-9	Front Scraper (Special (Without R)		10	11	13	13	14	15	17	18	20
28	5352050051-7	Rear Scraper (Special (Without R)		10	11	13	13	14	15	17	18	20
29	5138090001-0	Wrench For Hexagonal Nut 1.1/4" - 1" - 3/4" - 5/8"	2									
30	5138050005-5	Wrench "L" For Hexagonal Nut 5/8"	1									
31	5138020001-9	Wrench For Hexagonal Nut 3/8" - 1/2"	1									
32	6020310143-3	French Head Bolt 1/2" X 1.5/8" 12F W Gr2 Rt Special		40	44	52	52	56	60	68	72	80
33	6020050116-3	Cotterpin 1/4" X 2"		4	4	4	4	4	4	4	4	2
33	6020050116-3	Cotterpin 1/4" X 2"		2	2	2	4	2	2	4	4	2
34	6020390293-2	Lock Ø5,75 X 40mm			4	4	4	4	4			
35	6020130108-7	Grease Fitting 1/8"	5									
35	6020130108-7	Grease Fitting 1/8"		5	17	13	5	17	17	17	19	5
36	6020390308-4	Lock Nma - Type "R" Ø4,5 X 80mm		1	1	1	1	1	1	1	1	4
37	6020311138-2	Hexagonal Head Bolt 1" X 6" 8F Unc1A Gr5 Rp		3	2	2	2	2	2			
38	6020311136-6	Hexagonal Head Bolt 1" X 5.1/2" 8F Unc1A Gr5 Rp	1									
39	6020010414-8	Pressure Washer 3/4" Media Industry		2	2	1	1	1	1	1	1	1
40	6020310770-9	Hexagonal Nut 3/4" 10F Unc Gr5 Ch.1.7/32" Height 18,50mm	2									
41	6020310760-1	Hexagonal Nut 5/8" 11F Unc Gr5 Ch.1.1/16" Height 15,00mm		1	1	1	1	1	1	1	1	2
42	6020311093-9	Hexagonal Head Bolt 3/4" X 1.3/4" 10F Unc1A Gr5 Rt	1									
42	6020311094-7	Hexagonal Head Bolt 3/4" X 2.1/4" 10F Unc1A Gr5 Rt		1								
43	5372012774-8	Hose Ø3/8"X 4500mm 1 Braid W/1Trg And 1Trf W/Male Quick Coupl.	2									
44	5040011239-5	Front Bar(Hydraulic Opening)		1	1	1	1	1	1	1	1	
44	5040011229-8	Front Bar										1
45	5558070011-9	Adjustment Lock(Compr.1230mm)	1									
46	5530010771-0	Support Of Drawbar		1	1	1	1	1	1			
47	5530060020-3	Hoses Support	1									
48	5420070044-1	Square Head Bolt 1" X 155mm 8F Unc 1A Gr5 Rp	2									
49	5024010061-1	Smooth Washer Ø33,5 X Ø53,5 X 4,75mm	2									
50	5024010192-8	Smooth Washer Ø30 X Ø52 X 4,75mm(Galvanised)		4	2	2	2	2	2			
51	5024010039-5	Smooth Washer Ø26,2 X Ø44 X 4,75mm			2	2	2	2	2			
52	5432040014-0	Square Head Pin Ø37,5 X 150mm			2	2	2	2	2			
53	5552010161-5	Tube Of Lock					1	1	1			
54	5558010347-1	Lateral Lock Nv 28 A 36 Dics			1	1						
54	5558010004-9	Lateral Lock					1	1	1			
55	6020390292-4	Lock Ø8 X 54mm			2							
56	5432120022-5	French Head Pin Ø1" X 90mm					2	2	2			

• NV Hydraulic Opening (Spacing 200mm)

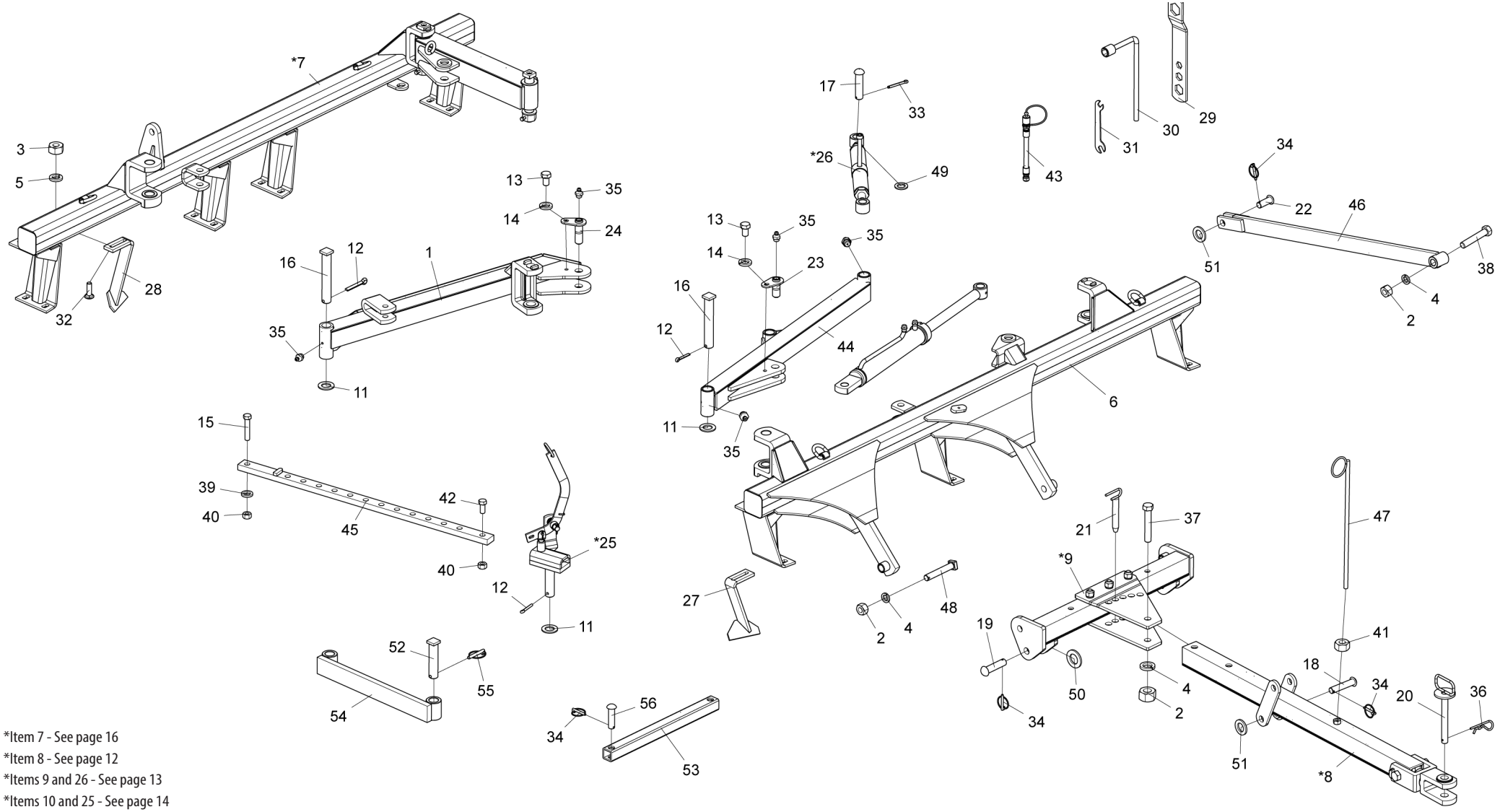

*Item 7 - See page 16
*Item 8 - See page 12
*Items 9 and 26 - See page 13
*Items 10 and 25 - See page 14

• Table NV Hydraulic Opening (Spacing 200mm)

Item	Code	Product description	All	NV 28 Discs	NV 32 Discs	NV 36 Discs	NV 40 Discs	NV 42 Discs	NV 44 Discs	NV 48 Discs	NV 52 Discs	NV 56 Discs
1	5040040030-7	Rear Stabilizer Bar		1	1							
1	5040040015-3	Rear Stabilizer Bar(Hydraulic Opening)				1	1	1	1	1	1	
2	6020310778-4	Hexagonal Nut 1" 8F Unc Gr5 Ch.1.5/8" Height 25,00mm		3	3	3	3	4	3	3	3	3
2	6020310778-4	Hexag. Nut 1" 8F Unc Gr5 Ch.1.5/8" H. 25,00mm (For Hydr. Transp.)		4	4	4	4	4	4			
3	6020310754-7	Hexagonal Nut 1/2" 12F W Gr5 Ch.7/8" Height 12,00mm		37	45	44	52	56	60	60	68	76
3	6020310754-7	Hexagonal Nut 1/2" 12F Ch.7/8" Height 12,00mm W/ Hydr.Transp.		36	44	52	52	56	60			
4	6020010420-2	Pressure Washer 1" Media Industry		1	1	1	1	4	1	1	1	3
4	6020010420-2	Pressure Washer 1" Media Industry (For Hydraulic Transp.)		4	4	4	4	4	4			
5	6020010410-5	Pressure Washer 1/2" Media Industry		36	44	44	52	56	60	60	68	76
6	5022013002-6	Front Gang Nv-28 Discs Spacing 200mm Without Wheel With Piston		1								
6	5022013108-1	Front Gang Nv-28 Discs Spacing 200mm Hydraulic Transport		1								
6	5022013000-0	Front Gang Nv-32 Discs Spacing 200mm Without Wheel With Piston			1							
6	5022013107-3	Front Gang Nv-32 Discs Spacing 200mm Hydraulic Transport			1							
6	5022120150-4	Front Gang Nv-36 Discs Spacing 200mm Without Wheel				1						
6	5022010690-7	Front Gang Nv-36 Discs Spacing 200mm Hydraulic Transport				1						
6	5022120151-2	Front Gang Nv-40 Discs Spacing 200mm Without Wheel					1					
6	5022010679-6	Front Gang Nv-40 Discs Spacing 200mm Hydraulic Transport					1					
6	5022120152-0	Front Gang Nv-42 Discs Spacing 200mm Without Wheel						1				
6	5022010693-1	Front Gang Nv-42 Discs Spacing 200mm Hydraulic Transport						1				
6	5022120149-0	Front Gang Nv-44 Discs Spacing 200mm Without Wheel							1			
6	5022010695-8	Front Gang Nv-44 Discs Spacing 200mm Hydraulic Transport							1			
6	5022120093-1	Front Gang NV-48 Discs Spacing 200mm								1		
6	5022120103-2	Front Gang Nv-52 Discs Spacing 200mm Without Wheel									1	
6	5022010865-9	Front Gang Nv-56 Discs Spacing 200mm Without Wheel										1
*7	5022013093-0	Rear Gang Nv-28 Discs Spacing 200mm With Wheel With Piston		1								
*7	5022013071-9	Rear Gang Nv-28 Discs Spacing 200mm Hydra. Transport W/Piston		1								
*7	5022013092-1	Rear Gang Nv-32 Discs Spacing 200mm With Wheel With Piston			1							
*7	5022013069-7	Rear Gang Nv-32 Discs Spacing 200mm Hydra. Transport W/Piston			1							
*7	5022090404-8	Rear Gang Nv-36 Discs Spacing 200mm With Wheel				1						
*7	5022010703-2	Rear Gang Nv-36 Discs Spacing 200mm Hydraulic Transport				1						
*7	5022090405-6	Rear Gang Nv-40 Discs Spacing 200mm With Wheel					1					
*7	5022010677-0	Rear Gang Nv-40 Discs Spacing 200mm Hydraulic Transport					1					
*7	5022090406-4	Rear Gang Nv-42 Discs Spacing 200mm With Wheel						1				
*7	5022010691-5	Rear Gang Nv-42 Discs Spacing 200mm Hydraulic Transport						1				
*7	5022090407-2	Rear Gang Nv-44 Discs Spacing 200mm With Wheel							1			
*7	5022010696-6	Rear Gang Nv-44 Discs Spacing 200mm Hydraulic Transport							1			
*7	5022090408-0	Rear Gang Nv-48 Discs Spacing 200mm With Wheel								1		
*7	5022090409-9	Rear Gang Nv-52 Discs Spacing 200mm With Wheel									1	
*7	5022010864-0	Rear Gang Nv-56 Discs Spacing 200mm With Wheel										1
*8	5084030024-0	Hitch Drawbar With Piston	1									
*8	5084010059-3	Hitch Drawbar(Hydraulic Transport W/Piston)		1	1	1	1	1	1			
*9	5040020033-2	Hitch Transversal Bar	1									
*9	5040010135-0	Hitch Transversal Bar For Hydraulic Transport		1	1	1	1	1	1			
*10	6020060477-9	Hydr. Cylinder "O.D" Ø1.5/8" X Ø2.1/2" X 346mm(C) X 680mm(C)	1									
11	5024010130-8	Smooth Washer Ø39 X Ø66 X 4,75mm (For Hydraulic Transp.)		4	3	4	4	1	4	4	4	3
11	5024010130-8	Smooth Washer Ø39 X Ø66 X 4,75mm (For Hydraulic Transp.)		4	1	1	1	1	1			
12	6020050122-8	Cotterpin 3/8" X 2.1/2"		4	3	4	4	3	4	4	4	4
12	6020050122-8	Cotterpin 3/8" X 2.1/2"		3	3	3	3	3	3	4	4	4
13	6020310183-2	Hexagonal Head Bolt 5/8" X 1" 11F Unc1A Gr2 Rt	2									

Item	Code	Product description	All	NV 28 Discs	NV 32 Discs	NV 36 Discs	NV 40 Discs	NV 42 Discs	NV 44 Discs	NV 48 Discs	NV 52 Discs	NV 56 Discs
14	6020010412-1	Pressure Washer 5/8" Media Industry	2									
15	6020311099-8	Hexagonal Head Bolt 3/4" X 4" 10F Unc1A Gr5 Rp	1									
16	5432040004-2	Square Head Pin Ø37,5 X 220mm	3									
17	6020310639-7	Square Head Pin Ø30,53 x 106mm	2									
18	5432120089-6	French Head Pin Ø1" X 117mm (For Hydraulic Transp.)		1	1	1	1	1	1			
19	5432120108-6	French Head Pin Ø28 X 105mm (For Hydraulic Transp.)		2	2	2	2	2	2			
20	5432060023-8	Pin Ø1" X 210mm	1									
21	5432010229-7	Pin Ø1" X 155mm	1									
22	5432120073-0	French Head Pin Ø1" X 62mm		1	1	1	1	1	1			
23	5432080013-0	Lock Pin Ø31 X 70mm Without Grease Fitting(Hydraulic Opening)	1									
24	5432080008-3	Lock Pin Ø31 X 95mm Without Grease Fitting(Hydraulic Opening)	1									
25	5468010016-3	Complete Lock Handle	1									
*26	5484010065-3	Complete Regulator	1									
27	5352050050-9	Front Scraper (Special (Without R)		9	11	11	13	14	15	15	17	19
28	5352050051-7	Rear Scraper (Special (Without R)		9	11	11	13	14	15	15	17	19
29	5138090001-0	Wrench For Hexagonal Nut 1.1/4" - 1" - 3/4" - 5/8"	2									
30	5138050005-5	Wrench "L" For Hexagonal Nut 5/8"	1									
31	5138020001-9	Wrench For Hexagonal Nut 3/8" - 1/2"	1									
32	6020310143-3	French Head Bolt 1/2" X 1.5/8" 12F W Gr2 Rt Special		36	44	44	52	56	60	60	68	76
33	6020050116-3	Cotterpin 1/4" X 2"		4	4	4	4	2	4	4	4	4
33	6020050116-3	Cotterpin 1/4" X 2" (For Hydraulic Transp.)		2	2	2	2	2	2	4	4	4
34	6020390293-2	Lock Ø5,75 X 40mm (For Hydraulic Transp.)		4	4	4	4	4	4			
35	6020130108-7	Grease Fitting 1/8"		5	6	5	5	5	5	5	5	5
36	6020390308-4	Lock Nma - Type "R" Ø4,5 X 80mm		1	1	1	1	1	1	1	1	4
37	6020311138-2	Hexagonal Head Bolt 1" X 6" 8F Unc1A Gr5 Rp (For Hydraulic Transp.)		1	1	2	1	1	1			
38	6020311136-6	Hexagonal Head Bolt 1" X 5.1/2" 8F Unc1A Gr5 Rp	1									
39	6020010414-8	Pressure Washer 3/4" Media Industry		2	2	1	1	1	1	1	1	1
39	6020010414-8	Pressure Washer 3/4" Media Industry (For Hydraulic Transp.)		1	1	1	1	1	1	1	1	1
40	6020310770-9	Hexagonal Nut 3/4" 10F Unc Gr5 Ch.1.7/32" Height 18,50mm	2									
41	6020310760-1	Hexagonal Nut 5/8" 11F Unc Gr5 Ch.1.1/16" Height 15,00mm	1									
42	6020311093-9	Hexagonal Head Bolt 3/4" X 1.3/4" 10F Unc1A Gr5 Rt		1	1	1	1	1	1	1	1	1
43	5372012774-8	Hose Ø3/8" X 4500mm 1 Braid W/1Trg And 1Trf W/Male Quick Coupl.	2									
44	5040011220-4	Front Bar(Hydraulic Opening)		1	1	1	1	1	1	1	1	
44	5040010283-7	Front Bar										1
45	5558070011-9	Adjustment Lock(Compr.1230mm)				1	1	1	1	1	1	
45	5558010266-1	Adjustment Lock(Compr.1230mm)										1
46	5530010771-0	Support Of Drawbar (For Hydraulic Transp.)		1	1	1	1	1	1			
47	5530060020-3	Hoses Support	1									
48	5420070044-1	Square Head Bolt 1" X 155mm 8F Unc 1A Gr5 Rp		2	2	2	2	2	2	2	2	2
49	5024010061-1	Smooth Washer Ø33,5 X Ø53,5 X 4,75mm		2	2	2	2	2	2	2	2	2
50	5024010192-8	Smooth Washer Ø30 X Ø52 X 4,75mm(Galvanised)		2	2	2	2	2	2			
51	5024010039-5	Smooth Washer Ø26,2 X Ø44 X 4,75mm (For Hydraulic Transp.)		2	2	2	2	2	2			
52	5432040014-0	Square Head Pin Ø37,5 X 150mm (For Hydraulic Transp.)			2	2	2	2	2			
53	5552010161-5	Tube Of Lock (For Hydraulic Transp.)					1	1	1			
54	5558010347-1	Lateral Lock Nv 28 A 36 Dics (For Hydraulic Transp.)			1	1						
54	5558010004-9	Lateral Lock (For Hydraulic Transp.)					1	1	1			
55	6020390292-4	Lock Ø8 X 54mm (For Hydraulic Transp.)			2							
56	5432120022-5	French Head Pin Ø1" X 90mm (For Hydraulic Transp.)					2	2	2			

• Hitch Drawbar (Mechanical Opening)

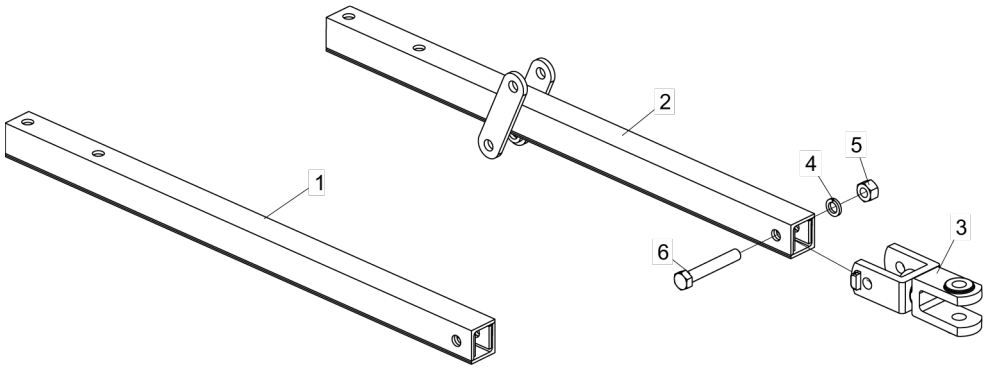

Item	Code	Product description	All	Without Hydraylic Transport	For Hydraylic Transport
1	5084030003-7	Hitch Drawbar (10 To 20 Discs W/ Mechanic Opening)		1	
2	5084010047-0	Hitch Drawbar			1
3	5332010008-5	Hitch Shackle	1		
4	6020010420-2	Pressure Washer 1" Media Industry	1		
5	6020310778-4	Hexagonal Nut 1" 8F Unc Gr5 Ch.1.5/8" Height 25,00Mm	1		
6	6020311139-0	Hexagonal Head Bolt 1" X 6.1/2" 8F Unc1A Gr5 Rp	1		

• Hitch Drawbar (Hydraulic Opening)

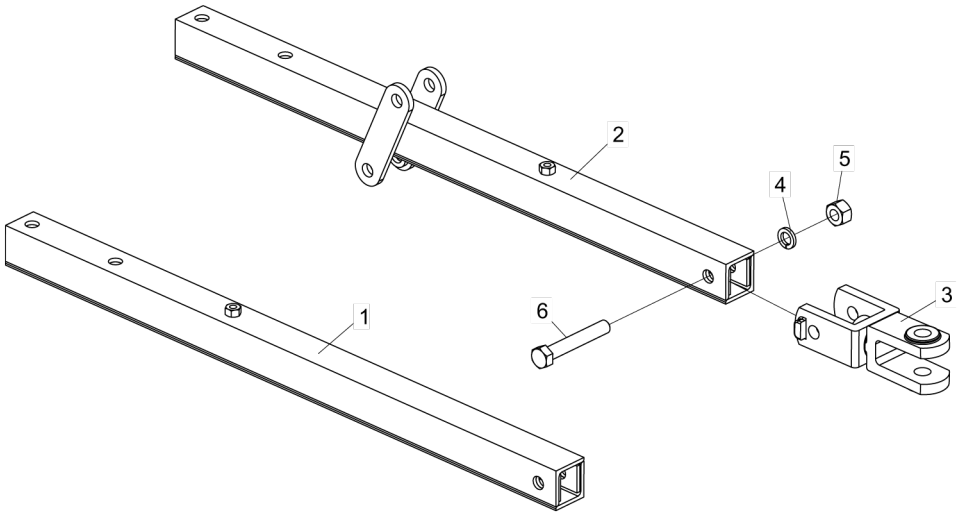

Item	Code	Product description	All	Without Hydraylic Transport	For Hydraylic Transport
1	5084030014-2	Hitch Drawbar		1	
2	5084010058-5	Hitch Drawbar(Hydraulic Transport W/Piston)			1
3	5332010008-5	Hitch Shackle	1		
4	6020010420-2	Pressure Washer 1" Media Industry	1		
5	6020310778-4	Hexagonal Nut 1" 8F Unc Gr5 Ch.1.5/8" Height 25,00Mm	1		
6	6020311139-0	Hexagonal Head Bolt 1" X 6.1/2" 8F Unc1A Gr5 Rp	1		

• Hitch Transversal Bar

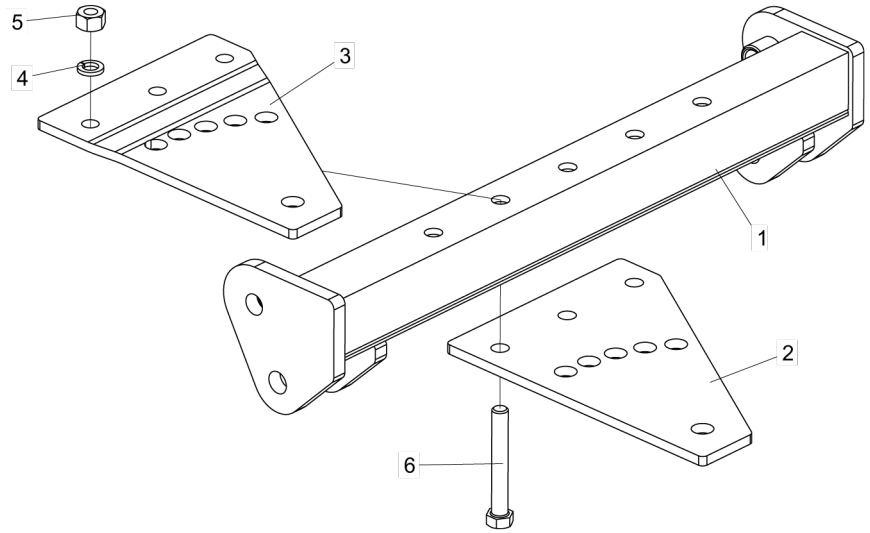

Item	Code	Product description	All	Without Hydraylic Transport	For Hydraylic Transport
1	5040020022-7	Hitch Transversal Bar		1	
1	5040010134-2	Hitch Transversal Bar			1
2	5136012684-0	Adjustement Lower Plate		1	
2	5136012685-8	Adjustment Plate			1
3	5136012686-6	Adjustement Upper Plate	1		
4	6020010414-8	Pressure Washer 3/4" Media Industry	3		
5	6020310770-9	Hexagonal Nut 3/4" 10F Unc Gr5 Ch.1.7/32" Height 18,50Mm	3		
6	6020311104-8	Hexagonal Head Bolt 3/4" X 5.1/2" 10F Unc1A Gr5 Rp	3		

• Complete Regulator

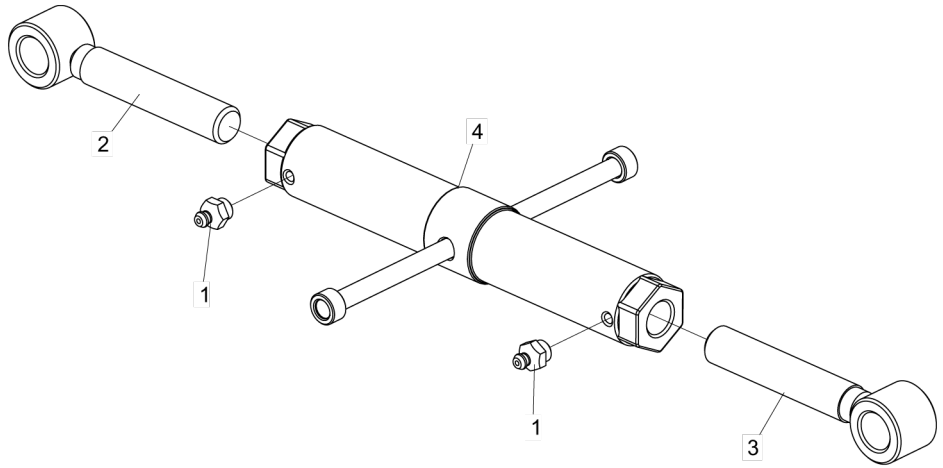

Item	Code	Product description	All
1	6020130108-7	Grease Fitting 1/8"	2
2	5484040003-7	Regulator R.1.1/4"Unc X 197Mm With Bushing	1
3	5484040002-9	Regulator R.1.1/4"Unc Left X 197Mm	1
4	5484010014-9	Draw Bar Regulator	1

• Complete Lock Handle

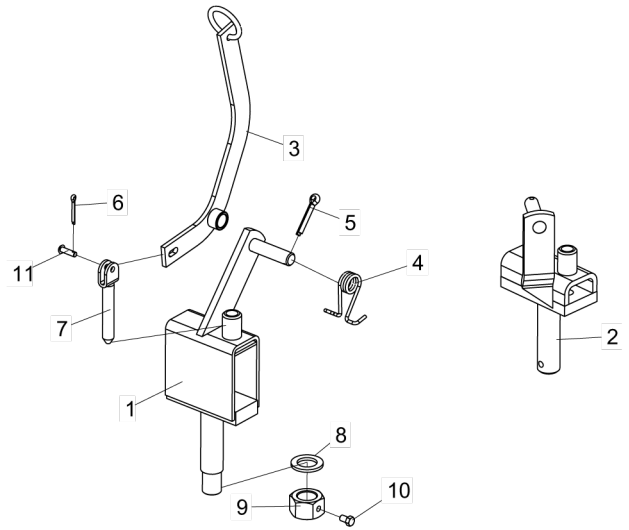

Item	Code	Product description	All	NV 28 and 32 Discs	NV 36 to 56 Discs
1	5170020028-4	Lock Handle Support		1	
2	5170020008-0	Corpo Do Puxador De Trava			1
3	5090020011-8	Complete Lock Handle	1		
4	6020250372-4	Torsion Helical Spring Ø26 X Ø36 X 78Mm	1		
5	6020050114-7	Cotterpin 1/4" X 1.1/2"	1		
6	6020050101-5	Cotterpin 1/8" X 1"	1		
7	5432060017-3	Pin Of Ø19 X 110Mm With Plate	1		
8	6020010453-9	Smooth Washer M33 Ø34,00 X Ø60,00 X 5,00mm (Din 125A)		1	
9	5456010022-4	Hexagonal Nut 1.1/4" 7F Unc Gr5 Key.2" Height.31,00Mm With Hole R.3/8"		1	
10	6020311030-0	Hexagonal Head Bolt 3/8" X 5/8" 16F Unc1A Gr2 Rt		1	
11	6020310825-0	French Head Pin Ø8,3 X 25mm	1		

• Hydraulic Cylinder

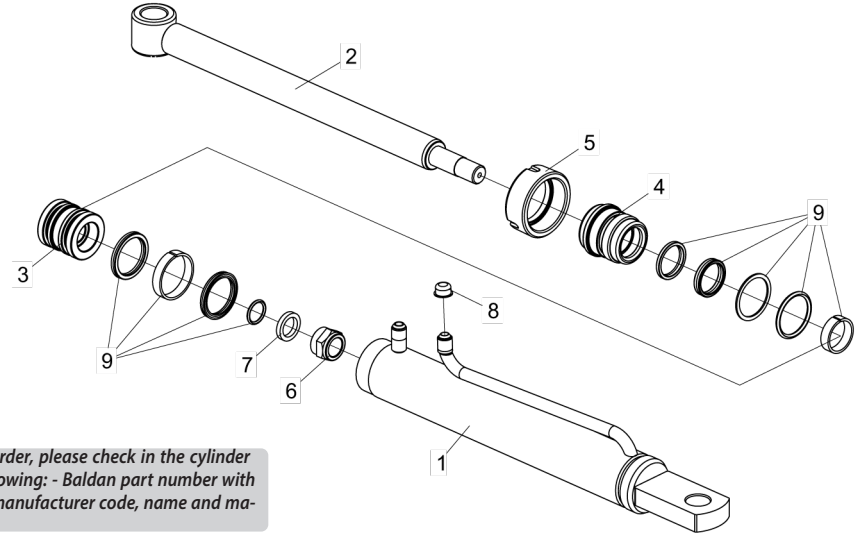

Item	Code	Product description	All
1	5144010588-6	Jacket Ø63,50(2.1/2") x 574mm	1
2	5326020008-5	Piston Rod Ø41.27 (1.5/8") x 501.5mm	1
3	5236010005-7	Piston Plung de Ø26,72 x Ø62,90 x 60mm	1
4	5152010005-2	Piston Coupling Ø41,10 X Ø70 X 68MM	1
5	5456050005-2	Cylindric Nut 73,75 12F (Piston)	1
6	5456140002-7	Nut W/Nylon R.1" Uns 14Fpp - Wrench 1.1/2" - Height 28,0Mm Special	1
7	5024010110-3	Smooth Washer Ø27 X Ø38 X 1/4"	1
8	6020390042-5	Plastic Cover Bt-21	2
9	6020190065-7	Repair Kit For Hydraulic Cylinders "D.A" 1.5/8" X 2.1/2"	2

For spare parts order, please check in the cylinder jacket (1), the following: - Baldan part number with 11 numbers, the manufacturer code, name and manufacturer date.

• Rear Gang NV Spacing 175mm Mechanical Opening

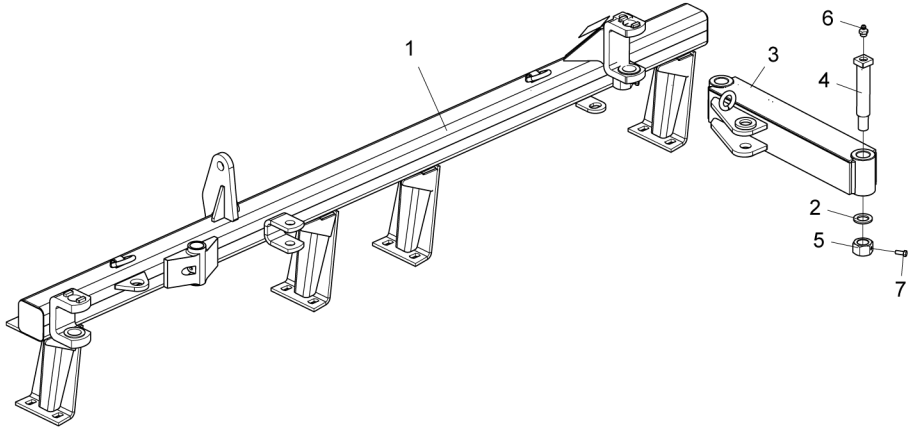

Item	Code	Product description	All	NV 28 Discs	NV 32 Discs	NV 36 Discs	NV 40 Discs	NV 42 Discs	NV 44 Discs	NV 48 Discs	NV 52 Discs	NV 56 Discs
1	5022013148-0	Rear Gang Nv-28 Discs Without Piston		1								
1	5022013154-5	Rear Gang NV-28 Discs Spacing 175mm W/Hydraulic Transport		1								
1	5022013127-8	Rear Gang Nv-32 Discs Spacing 175Mm Without Piston			1							
1	5022013134-0	Rear Gang NV-32 Discs Spacing 175mm W/Hydraulic Transport			1							
1	5022013017-4	Rear Gang Nv-36 Discs Spacing 175Mm				1						
1	5022013080-8	Rear Gang NV-36 Discs Spacing 175mm Transporte Hidraulico				1						
1	5022013015-8	Rear Gang Nv-40 Discs					1					
1	5022013159-6	Rear Gang Nv-40 Discs Spacing 175Mm W/Hydraulic Transport					1					
1	5022013013-1	Rear Gang NV-42 Discs Spacing 175mm						1				
1	5022013076-0	Rear Gang Nv-42 Discs Spacing 175Mm W/Hydraulic Transport						1				
1	5022013011-5	Rear Gang Nv-44 Discs							1			
1	5022013157-0	Rear Gang Nv-44 Discs Spacing 175Mm W/Hydraulic Transport							1			
1	5022013009-3	Rear Gang Nv-48 Discs Spacing 175Mm								1		
1	5022013007-7	Rear Gang NV-52 Discs Spacing 175mm									1	
1	5022013005-0	Rear Gang NV-56 Discs Spacing 175mm										1
2	5024010061-1	Smooth Washer Ø33,5 X Ø53,5 X 4,75Mm	2									
3	5040070002-5	Union Bar Of Front And Rear Gang		1	1							1
3	5040070004-1	Union Bar Of Front And Rear Gang				1	1	1	1	1	1	
4	5420070022-0	Square Head Bolt Ø37,5 X 210Mm W/Hole For Grease Fitting	2									
5	5456010022-4	Hexagonal Nut 1.1/4" 7F Unc Gr5 Key.2" Height.31,00Mm	2									
6	6020130108-7	Grease Fitting 1/8"		3	3	2	2	2	2	2	2	2
7	6020310054-2	Hexagonal Head Bolt 3/8" X 1" 16F Unc1A Gr2 Rt		2	2	2	2	2	2	2	2	
7	6020310021-6	Hexagonal Head Bolt 3/8" X 1" 16F Unc1A Gr5 Rt										2

• Rear Gang NV Spacing 200mm Mechanical Opening

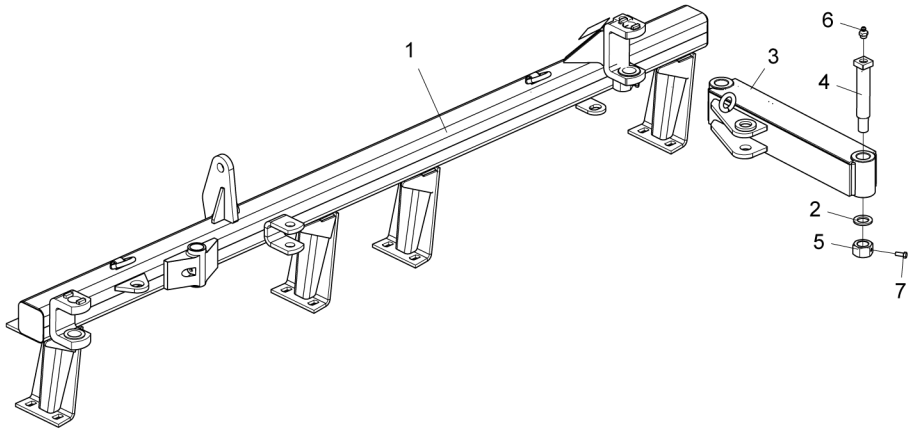

Item	Code	Product description	All	NV 28 Discs	NV 32 Discs	NV 36 Discs	NV 40 Discs	NV 42 Discs	NV 44 Discs	NV 48 Discs	NV 52 Discs	NV 56 Discs
1	5022013145-6	Rear Gang Nv - 28 Discs Spacing 200Mm		1								
1	5022013151-0	Rear Gang Nv-28 Disc Spacing 200Mm W/Hydraulic Transport		1								
1	5022013124-3	Rear Gang Nv - 32 Discs Spacing 200Mm			1							
1	5022013131-6	Rear Gang Nv-32 Disc Spacing 200Mm Hydraulic Transport			1							
1	5022012999-0	Rear Gang Nv - 36 Discs Spacing 200Mm				1						
1	5022013068-9	Rear Gang Nv-36 Disc Spacing 200Mm Hydraulic Transport				1						
1	5022012997-4	Rear Gang Nv - 40 Discs Spacing 200Mm					1					
1	5022013066-2	Rear Gang Nv-40 Disc Spacing 200Mm Hydraulic Transport					1					
1	5022012995-8	Rear Gang Nv - 42 Discs Spacing 200Mm						1				
1	5022013064-6	Rear Gang Nv-42 Disc Spacing 200Mm Hydraulic Transport						1				
1	5022012993-1	Rear Gang Nv - 44 Discs Spacing 200Mm							1			
1	5022013062-0	Rear Gang Nv-44 Disc Spacing 200Mm Hydraulic Transport							1			
1	5022012991-5	Rear Gang Nv - 48 Discs Spacing 200Mm								1		
1	5022012989-3	Rear Gang Nv - 52 Discs Spacing 200Mm									1	
1	5022012987-7	Rear Gang NV-56 Discs Spacing 200mm										1
2	5024010061-1	Smooth Washer Ø33,5 X Ø53,5 X 4,75Mm	2									
3	5040070002-5	Union Bar Of Front And Rear Gang		1	1							1
3	5040070004-1	Union Bar Of Front And Rear Gang				1	1	1	1	1	1	
4	5420070022-0	Square Head Bolt Ø37,5 X 210Mm	2									
5	5456010022-4	Hexagonal Nut 1.1/4" 7F Unc Gr5 Key.2" With Hole R.3/8"	2									
6	6020130108-7	Grease Fitting 1/8"	2									
7	6020310021-6	Hexagonal Head Bolt 3/8" X 1" 16F Unc1A Gr5 Rt	2									

• Rear Gang NV Spacing 175mm Hydraulic Opening

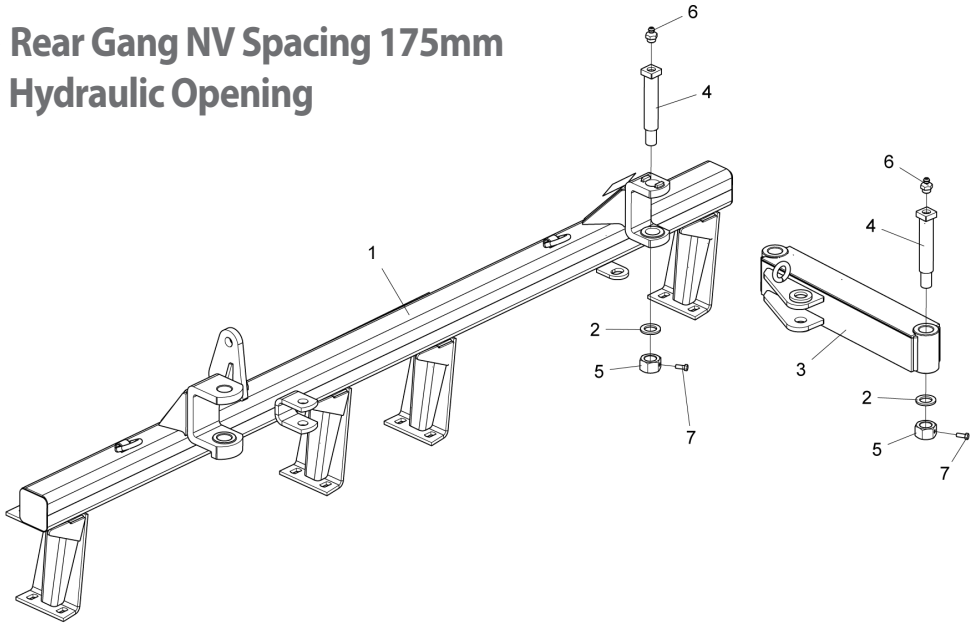

Item	Code	Product description	All	Nv 28 Discs	Nv 32 Discs	Nv 36 Discs	Nv 40 Discs	Nv 42 Discs	Nv 44 Discs	Nv 48 Discs	Nv 52 Discs	Nv 56 Discs
1	5022013021-2	Rear Gang Nv-28 Discs Spacing 175Mm With Piston		1								
1	5022013084-0	Rear Gang NV-28 Discs Spacing 175mm W/Hydraulic Transport		1								
1	5022013019-0	Rear Gang Nv-32 Discs(Spacing 175Mm) With Piston			1							
1	5022013082-4	Rear Gang Nv-32 Disc Spacing 175Mm W/Piston W/Hydra. Transport			1							
1	5022090249-5	Rear Gang Nv-36 Discs(Spacing 175Mm) W/Hydraulic Transport				1						
1	5022010991-4	Rear Gang NV-36 Discs Spacing 175mm TW/Hydraulic Transport				1						
1	5022090238-0	Rear Gang Nv-40 Discs					1					
1	5022010988-4	Rear Gang Nv-40 Discs Spacing 175Mm W/Hydraulic Transport					1					
1	5022090250-9	Rear Gang NV-42 Discs Spacing 175mm						1				
1	5022010933-7	Rear Gang Nv-42 Discs Spacing 175Mm W/Hydraulic Transport						1				
1	5022090239-8	Rear Gang Nv-44 Discs							1			
1	5022010930-2	Rear Gang Nv-44 Discs Spacing 175Mm W/Hydraulic Transport							1			
1	5022090251-7	Rear Gang Nv-48 Discs(Spacing 175Mm)								1		
1	5022090252-5	Rear Gang NV-52 Discs Spacing 175mm									1	
1	5022010869-1	Rear Gang NV-56 Discs Spacing 175mm										1
2	5024010061-1	Smooth Washer Ø33,5 X Ø53,5 X 4,75Mm	2									
3	5040070002-5	Union Bar Of Front And Rear Gang		1	1							1
3	5040070004-1	Union Bar Of Front And Rear Gang				1	1	1	1	1	1	
4	5420070022-0	Square Head Bolt Ø37,5 X 210Mm	2									
5	5456010022-4	Hexagonal Nut 1.1/4" 7F Unc Gr5 Key.2" With Hole R.3/8"	2									
6	6020130108-7	Grease Fitting 1/8"	2									
7	6020310021-6	Hexagonal Head Bolt 3/8" X 1" 16F Unc1A Gr5 Rt										2
7	6020310054-2	Hexagonal Head Bolt 3/8" X 1" 16F Unc1A Gr2 Rt		2	2	2	2	2	2	2	2	

• Rear Gang NV Spacing 200mm Hydraulic Opening

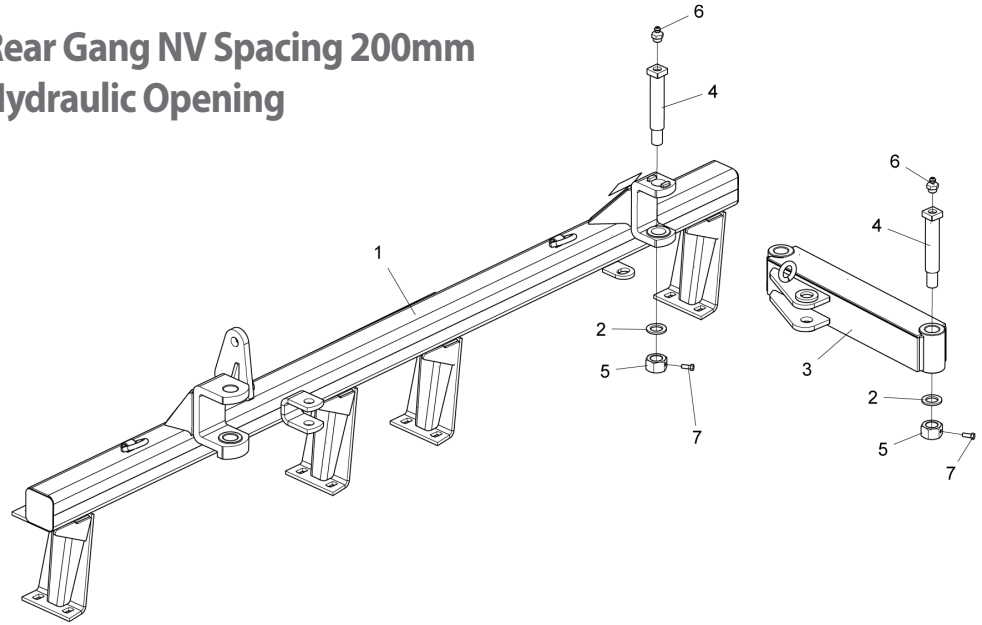

Item	Code	Product description	All	Nv 28 Discs	Nv 32 Discs	Nv 36 Discs	Nv 40 Discs	Nv 42 Discs	Nv 44 Discs	Nv 48 Discs	Nv 52 Discs	Nv 56 Discs
1	5022013003-4	Rear Gang Nv-28 Disc Spacing 200Mm With Piston.		1								
1	5022013072-7	Rear Gang Nv-28 Disc Spacing 200Mm Hydraulic Transport W/Piston		1								
1	5022013001-8	Rear Gang Nv-32 Disc Spacing 200Mm Without Wheel With Piston			1							
1	5022013070-0	Rear Gang Nv-32 Disc Spacing 200Mm Hydraulic Transport W/Piston			1							
1	5022090312-2	Rear Gang Nv - 36 Discs Spacing 200Mm				1						
1	5022010689-3	Rear Gang Nv-36 Disc Spacing 200Mm Hydraulic Transport				1						
1	5022090315-7	Rear Gang Nv - 40 Discs Spacing 200Mm					1					
1	5022010678-8	Rear Gang Nv-40 Disc Spacing 200Mm Hydraulic Transport					1					
1	5022090316-5	Rear Gang Nv - 42 Discs Spacing 200Mm						1				
1	5022010692-3	Rear Gang Nv-42 Disc Spacing 200Mm Hydraulic Transport						1				
1	5022090311-4	Rear Gang Nv - 44 Discs Spacing 200Mm							1			
1	5022010694-0	Rear Gang Nv-44 Disc Spacing 200Mm Hydraulic Transport							1			
1	5022090036-0	Rear Gang Nv - 48 Discs Spacing 200Mm								1		
1	5022090065-4	Rear Gang Nv - 52 Discs Spacing 200Mm									1	
1	5022010866-7	Rear Gang NV-56 Discs Spacing 200Mm										1
2	5024010061-1	Smooth Washer Ø33,5 X Ø53,5 X 4,75Mm	2									
3	5040070002-5	Union Bar Of Front And Rear Gang		1	1							1
3	5040070004-1	Union Bar Of Front And Rear Gang				1	1	1	1	1	1	
4	5420070022-0	Square Head Bolt Ø37,5 X 210Mm	2									
5	5456010022-4	Hexagonal Nut 1.1/4" 7F Unc Gr5 Key.2" With Hole R.3/8"	2									
6	6020130108-7	Grease Fitting 1/8"	2									
7	6020310021-6	Hexagonal Head Bolt 3/8" X 1" 16F Unc1A Gr5 Rt	2									

• Discs Section (Spacing 175mm)

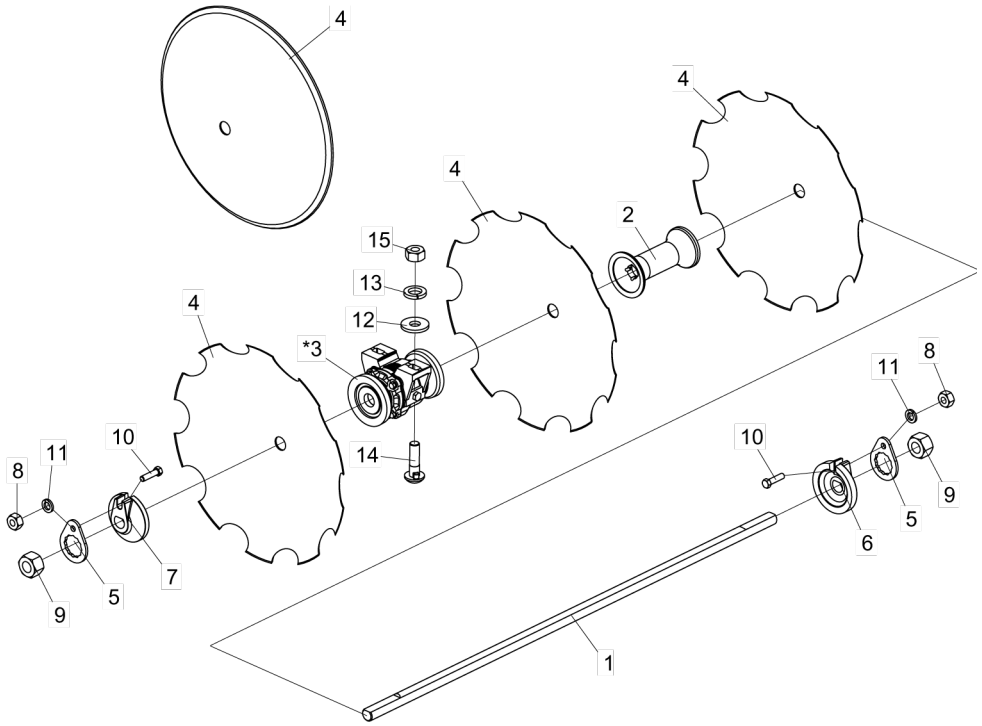

Item	Code	Product description	NV 28 Discs	NV 32 Discs	NV 36 Discs	NV 40 Discs	NV 42 Discs	NV 44 Discs	NV 48 Discs	NV 52 Discs	NV 56 Discs
1	5232050063-0	Shaft Ø1.1/4" X 2500Mm	2								
1	5232050056-7	Shaft Ø1.1/4" X 1425Mm		4				2	6		4
1	5232050058-3	Shaft Ø1.1/4" X 1600Mm			4						
1	5232050034-6	Shaft Ø1.1/4" X 1080Mm				2					
1	5232050055-9	Shaft Ø1.1/4" X 1255Mm				4		4			
1	5232050035-4	Shaft Ø1.1/4" X 1245Mm					6			4	
1	5232050055-9	Shaft Ø1.1/4" X 1255Mm					6				
1	5232050061-3	Shaft Ø1.1/4" X 2155Mm								2	2
2	5120010013-5	Spool 172Mm For Shaft ø1.1/4"	20	20	24	22	24	26	30	32	36
*3	5368010129-5	Front/Rear Grease Bearing Of 190Mm Without Protection For Shaft Ø1.1/4"	6	8	8	12	12	12	12	14	14
*3	5368010131-7	Front/Rear Oil Bearing Of 190Mm Without Protection For Shaft Ø1.1/4"	6	8	8	12	12	12	12	14	14
*3	5368010489-8	Front/Rear Oil Bearing Of 190Mm W/Protection For Shaft Ø1.1/4"	6	8	8	12	12	12	12	14	14
*3	5368020013-7	Friction Bearing Of 190Mm With Shaft Ø1.1/4"	6	8	8	12	12	12	12	14	
*3	5368010405-7	Axial (Oil) Front/Rear Bearing Of 190Mm Without Protection For Shaft Ø1.1/4"	6	8	8	12	12	12	12	14	14
4	2659340181-1	Concave Plain Disc Blade 16 X 3,00 Hc Rd 1.1/4 Single Bevel	28	32	36	40	42	44	48	52	56
4	2661340181-3	Concave Plain Disc Blade 18 X 3,00 Hc Rd 1.1/4 Single Bevel	28	32	36	40	42	44	48	52	56
4	2661360181-2	Concave Plain Disc Blade 18 X 3,50 Hc Rd 1.1/4 Single Bevel	28	32	36	40	42	44	48	52	56
4	2661390181-6	Concave Plain Disc Blade 18 X 4,00 Hc Rd 1.1/4 Single Bevel	28	32	36	40	42	44	48	52	56
4	2663360181-9	Concave Plain Disc Blade 20 X 3,50 Hc Rd 1.1/4 Single Bevel	28	32	36	40	42	44	48	52	56
4	2663390181-2	Concave Plain Disc Blade 20 X 4,00 Hc Rd 1.1/4 Single Bevel	28	32	36	40	42	44	48	52	56
4	2663400181-5	Concave Plain Disc Blade 20 X 4,50 Hc Rd 1.1/4 Single Bevel	28	32	36	40	42	44	48	52	56
4	2665360181-5	Concave Plain Disc Blade 22 X 3,50 Hc Rd 1.1/4 Single Bevel	28	32	36	40	42	44	48	52	56
4	2665390181-9	Concave Plain Disc Blade 22 X 4,00 Hc Rd 1.1/4 Single Bevel	28	32	36	40	42	44	48	52	56
4	2665400181-1	Concave Plain Disc Blade 22 X 4,50 Hc Rd 1.1/4 Single Bevel	28	32	36	40	42	44	48	52	56
4	2761340181-0	Concave Notched Disc Blade 18 X 3,00 Hc Rd 1.1/4 Single Bevel	28	32	36	40	42	44	48	52	56
4	2761390181-2	Concave Notched Disc Blade 18 X 4,00 Hc Rd 1.1/4 Single Bevel	28	32	36	40	42	44	48	52	56
4	2763360181-5	Concave Notched Disc Blade 20 X 3,50 Hc Rd 1.1/4 Single Bevel	28	32	36	40	42	44	48	52	56
4	2763390181-9	Concave Notched Disc Blade 20 X 4,00 Hc Rd 1.1/4 Single Bevel	28	32	36	40	42	44	48	52	56
4	2763400181-1	Concave Notched Disc Blade 20 X 4,50 Hc Rd 1.1/4 Single Bevel	28	32	36	40	42	44	48	52	56
4	2765360181-1	Concave Notched Disc Blade 22 X 3,50 Hc Rd 1.1/4 Single Bevel	28	32	36	40	42	44	48	52	56
4	2765390181-5	Concave Notched Disc Blade 22 X 4,00 Hc Rd 1.1/4 Single Bevel	28	32	36	40	42	44	48	52	56
4	2765400181-8	Concave Notched Disc Blade 22 X 4,50 Hc Rd 1.1/4 Single Bevel	28	32	36	40	42	44	48	52	56
5	5558050004-7	Lock Of Nut Of Shaft	4	8	8	12	12	12	12	12	12
6	6010601053-9	Concave Stop Washer For Shaft Ø1.1/4"	2	4	4	6	6	6	6	6	6
7	6010601054-7	Convex Stop Washer For Shaft Ø1.1/4"	2	4	4	6	6	6	6	6	6
8	6020310754-7	Hexagonal Nut 1/2" 12F W Gr5 Ch.7/8" Height 12,00Mm	4	8	8	12	12	12	12	12	12
9	6020310793-8	Hexagonal Nut 1.1/4" 7F Unc Gr5 Ch.2" Height 31,00Mm	4	8	8	12	12	12	12	12	12
10	6020312060-8	Hexagonal Head Bolt 1/2" X 2.1/4" 12F W Gr5 Rp	4	8	8	12	12	12	12	12	12
11	6020010410-5	Pressure Washer 1/2" Media Industry	4	8	8	12	12	12	12	12	12
12	5024010298-3	Smooth Washer Ø17 X Ø44 X 4,75Mm	12	16	16	24	24	24	24	28	28
13	6020010412-1	Pressure Washer 5/8" Media Industry	12	16	16	24	24	24	24	28	28
14	6020312010-1	French Head Bolt 5/8" X 2.1/4" 11F Unc1A Gr5 Rp With Lock	12	16	16	24	24	24	24	28	28
15	6020310760-1	Hexagonal Nut 5/8" 11F Unc Gr5 Ch.1.1/16" Height 15,00Mm	12	16	16	24	24	24	24	28	28

*Item 3:

Grease Bearing - See page 19
Oil Bearing (Radial) - See page 20
Friction and Axial Bearings - See page 21

Disc Harrows W/Friction Bearing do not use Items 12 through 15.

BALDAN

• Discs Section (Spacing 200mm)

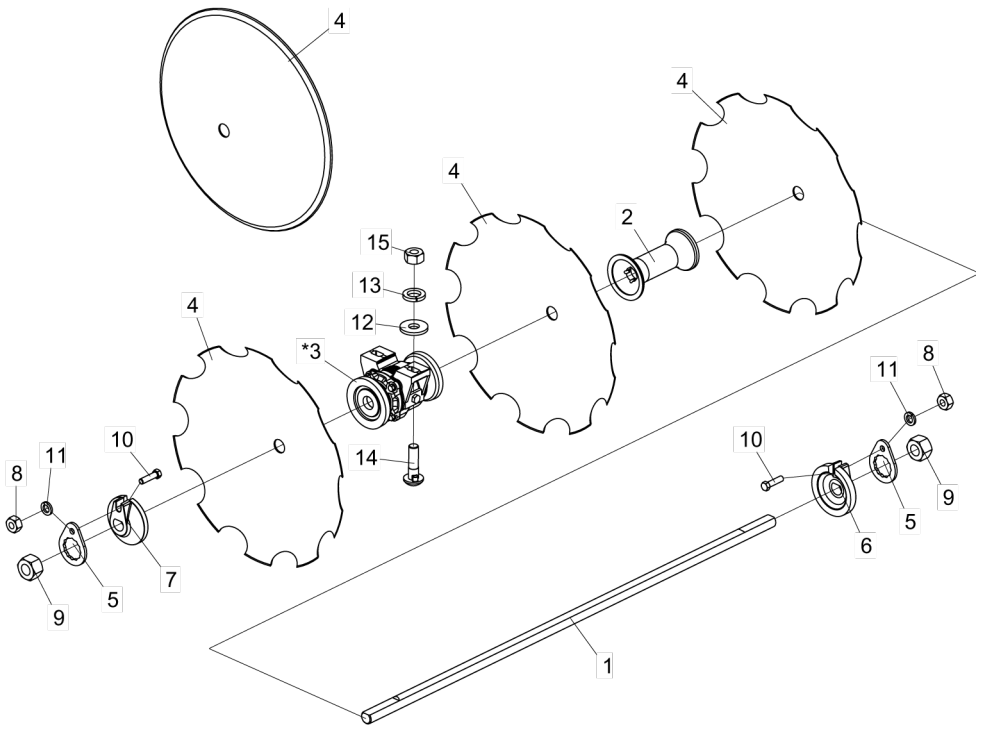

Item	Code	Product description	NV 28 Discs	NV 32 Discs	NV 36 Discs	NV 40 Discs	NV 42 Discs	NV 44 Discs	NV 48 Discs	NV 52 Discs	NV 56 Discs
1	5232050058-3	Shaft Ø1.1/4" X 1600Mm		4				2			
1	5232050136-9	Shaft Ø1.1/4" X 1180Mm			6	2			8	4	4
1	5232050137-7	Shaft Ø1.1/4" X 1390Mm	4			4	6	4		4	
1	5232010844-6	Shaft Ø1.1/4" X 1580Mm									4
2	5120010019-4	Spool 200Mm For Shaft ø1.1/4"	16	20	18	22	24	26	24	28	32
*3	5368010137-6	Front/Rear Grease Bearing Of 200Mm Without Protection For Shaft Ø1.1/4"	8	8	12	12	12	12	16	16	16
*3	5368010139-2	Front/Rear Oil Bearing Of 200Mm Without Protection For Shaft Ø1.1/4"	8	8	12	12	12	12	16	16	16
4	2659340181-1	Concave Plain Disc Blade 16 X 3,00 Hc Rd 1.1/4 Single Bevel	28	32	36	40	42	44	48	52	56
4	2661340181-3	Concave Plain Disc Blade 18 X 3,00 Hc Rd 1.1/4 Single Bevel	28	32	36	40	42	44	48	52	56
4	2661360181-2	Concave Plain Disc Blade 18 X 3,50 Hc Rd 1.1/4 Single Bevel	28	32	36	40	42	44	48	52	56
4	2661390181-6	Concave Plain Disc Blade 18 X 4,00 Hc Rd 1.1/4 Single Bevel	28	32	36	40	42	44	48	52	56
4	2663360181-9	Concave Plain Disc Blade 20 X 3,50 Hc Rd 1.1/4 Single Bevel	28	32	36	40	42	44	48	52	56
4	2663390181-2	Concave Plain Disc Blade 20 X 4,00 Hc Rd 1.1/4 Single Bevel	28	32	36	40	42	44	48	52	56
4	2663400181-5	Concave Plain Disc Blade 20 X 4,50 Hc Rd 1.1/4 Single Bevel	28	32	36	40	42	44	48	52	56
4	2665360181-5	Concave Plain Disc Blade 22 X 3,50 Hc Rd 1.1/4 Single Bevel	28	32	36	40	42	44	48	52	56
4	2665390181-9	Concave Plain Disc Blade 22 X 4,00 Hc Rd 1.1/4 Single Bevel	28	32	36	40	42	44	48	52	56
4	2665400181-1	Concave Plain Disc Blade 22 X 4,50 Hc Rd 1.1/4 Single Bevel	28	32	36	40	42	44	48	52	56
4	2761340181-0	Concave Notched Disc Blade 18 X 3,00 Hc Rd 1.1/4 Single Bevel	28	32	36	40	42	44	48	52	56
4	2761390181-2	Concave Notched Disc Blade 18 X 4,00 Hc Rd 1.1/4 Single Bevel	28	32	36	40	42	44	48	52	56
4	2763360181-5	Concave Notched Disc Blade 20 X 3,50 Hc Rd 1.1/4 Single Bevel	28	32	36	40	42	44	48	52	56
4	2763390181-9	Concave Notched Disc Blade 20 X 4,00 Hc Rd 1.1/4 Single Bevel	28	32	36	40	42	44	48	52	56
4	2763400181-1	Concave Notched Disc Blade 20 X 4,50 Hc Rd 1.1/4 Single Bevel	28	32	36	40	42	44	48	52	56
4	2765360181-1	Concave Notched Disc Blade 22 X 3,50 Hc Rd 1.1/4 Single Bevel	28	32	36	40	42	44	48	52	56
4	2765390181-5	Concave Notched Disc Blade 22 X 4,00 Hc Rd 1.1/4 Single Bevel	28	32	36	40	42	44	48	52	56
4	2765400181-8	Concave Notched Disc Blade 22 X 4,50 Hc Rd 1.1/4 Single Bevel	28	32	36	40	42	44	48	52	56
5	5558050004-7	Lock Of Nut Of Shaft	8	8	12	12	12	12	16	16	16
6	6010601053-9	Concave Stop Washer For Shaft Ø1.1/4"	4	4	6	6	6	6	8	8	8
7	6010601054-7	Convex Stop Washer For Shaft Ø1.1/4"	4	4	6	6	6	6	8	8	8
8	6020310754-7	Hexagonal Nut 1/2" 12F W Gr5 Ch.7/8" Height 12,00Mm	8	8	12	12	12	12	16	16	16
9	6020310793-8	Hexagonal Nut 1.1/4" 7F Unc Gr5 Ch.2" Height 31,00Mm	8	8	12	12	12	12	16	16	16
10	6020312060-8	Hexagonal Head Bolt 1/2" X 2.1/4" 12F W Gr5 Rp	8	8	12	12	12	12	16	16	16
11	6020010410-5	Pressure Washer 1/2" Media Industry	8	8	12	12	12	12	16	16	16
12	5024010298-3	Smooth Washer Ø17 X Ø44 X 4,75Mm	16	16	24	24	24	24	32	32	32
13	6020010412-1	Pressure Washer 5/8" Media Industry	16	16	24	24	24	24	32	32	32
14	6020312010-1	French Head Bolt 5/8" X 2.1/4" 11F Unc1A Gr5 Rp With Lock	16	16	24	24	24	24	32	32	32
15	6020310760-1	Hexagonal Nut 5/8" 11F Unc Gr5 Ch.1.1/16" Height 15,00Mm	16	16	24	24	24	24	32	32	32

*Item 3:
Grease Bearing - See page 19
Oil Bearing (Radial) - See page 20

Disc Harrows W/Friction Bearing do not use Items 12 through 15.

• Grease Bearing (Spacing 175mm)

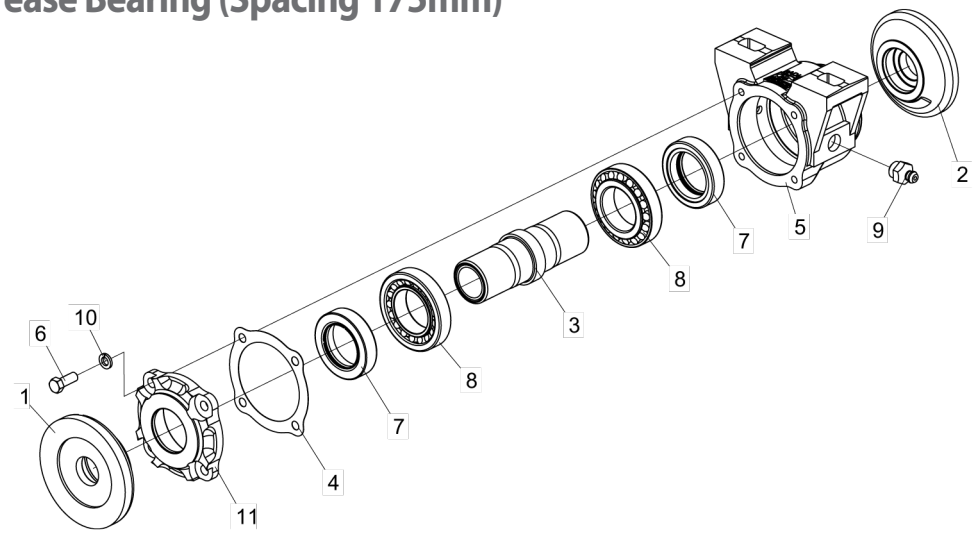

Item	Code	Product description	All
1	5024060042-8	Concave thrust washer	
2	5024060043-6	Convex thrust washer	
3	5080010284-4	Bearing bushing for axle Ø1.1/4"	1
4	6020190104-1	Paper Joint Ø90 x Ø134 x 1/64"	3
5	5368010079-5	Dnt/Trs Single Bearing To Grease W/O Protection	1
6	6020310021-6	Hex Cab Screw 3/8" X 1" 16F Unc1A Gr5 Rt	4
7	6020350236-5	Retainer Ø49.00 X Ø76.10 X 17.50Mm (Arca 5282 Gb/ Sabo 01199 Gb)	2
8	6020350054-0	Tapered Bearing 30210	2
9	6020130108-7	Grease Nipple 1/8" Straight Bsp-28F	2
10	6020010406-7	Pressure Washer 3/8" Medium	4
12	5538010031-1	Bearing Cover	1

• Grease Bearing (Spacing 200mm)

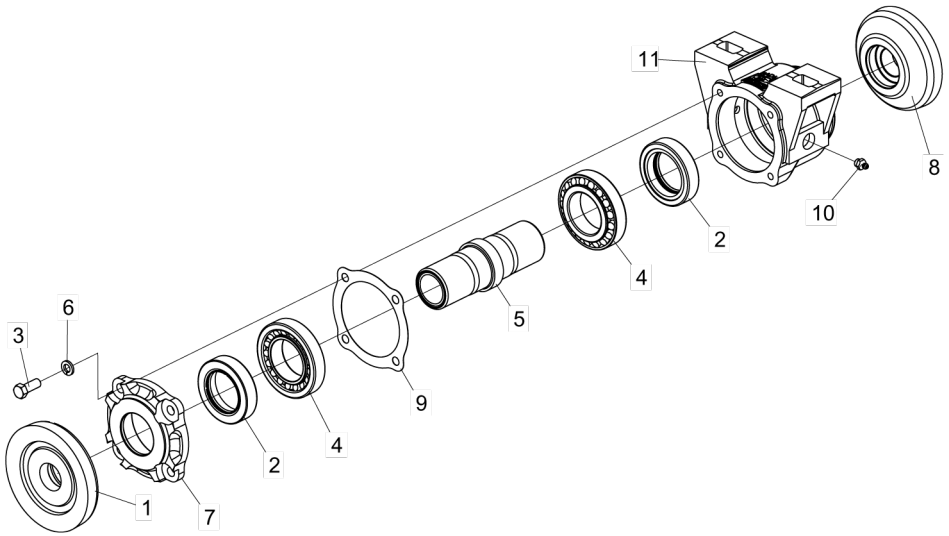

Item	Code	Product description	All
1	5024060035-5	Concave Back Washer 200Mm	1
2	6020350236-5	Retainer Ø49,00 X Ø76,10 X 17,50Mm	2
3	6020310021-6	Hexagonal Head Bolt 3/8" X 1" 16F Unc1A Gr5 Rt	4
4	6020350054-0	Bearing 30210	2
5	5080010284-4	Bearing Bushing For Shaftø1.1/4"	1
6	6020010406-7	Pressure Washer 3/8" Media Industry	4
7	5538010031-1	Bearing Cover	1
8	5024060036-3	Washer Of 200Mm	1
9	6020190104-1	Gascket Ø90 X Ø134 X 1/64"	4
10	6020130108-7	Grease Fitting 1/8"	2
11	5368010079-5	Spare Front/Rear Grease Bearing (Without Protection	1

• Oil Bearing (Radial) Spacing 175 mm

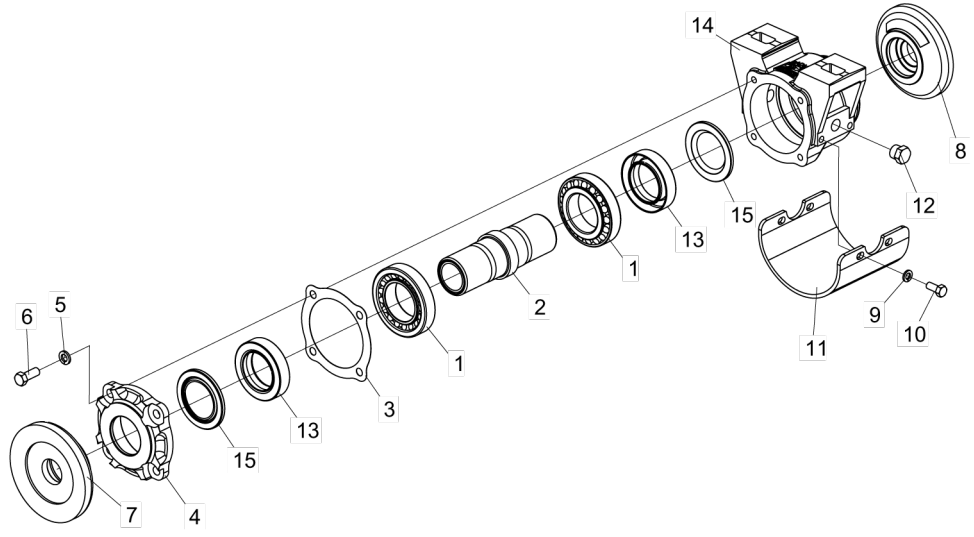

Item	Code	Product description	All	Without Protection	With Protection
1	6020350054-0	Bearing 30210	2		
2	5080010284-4	Bearing Bushing For Shaftø1.1/4"	1		
3	6020190104-1	Gascket Ø90 X Ø134 X 1/64"	4		
4	5538010031-1	Bearing Cover	1		
5	6020010406-7	Pressure Washer 3/8" Media Industry	4		
6	6020310021-6	Hexagonal Head Bolt 3/8" X 1" 16F Unc1A Gr5 Rt	4		
7	5024060042-8	Concave Washer	1		
8	5024060043-6	Convex Washer	1		
9	6020010404-0	Pressure Washer 5/16" Media Industry			4
10	6020312020-9	Hexagonal Head Bolt 5/16" X 3/4" 18F Unc1A Gr5 Rt			4
11	5464010078-0	Bearing Protection			1
12	5081010007-6	Hexagonal Head Plug 3/4" - R.3/8" - 19F - Bspt(Gas)	2		
13	6020350291-8	Retainer Ø49,00 X Ø76,00 X 17,50Mm	2		
14	5368010077-9	Spare Front/Rear Oil Bearing (Without Protection		1	
14	5368010482-0	Spare Front/Rear Oil Bearing W/Protection			1
15	6020010472-5	Washer 1199(Joinseal)-1002(Arca)	2		

• Oil Bearing (Radial) Spacing 200 mm

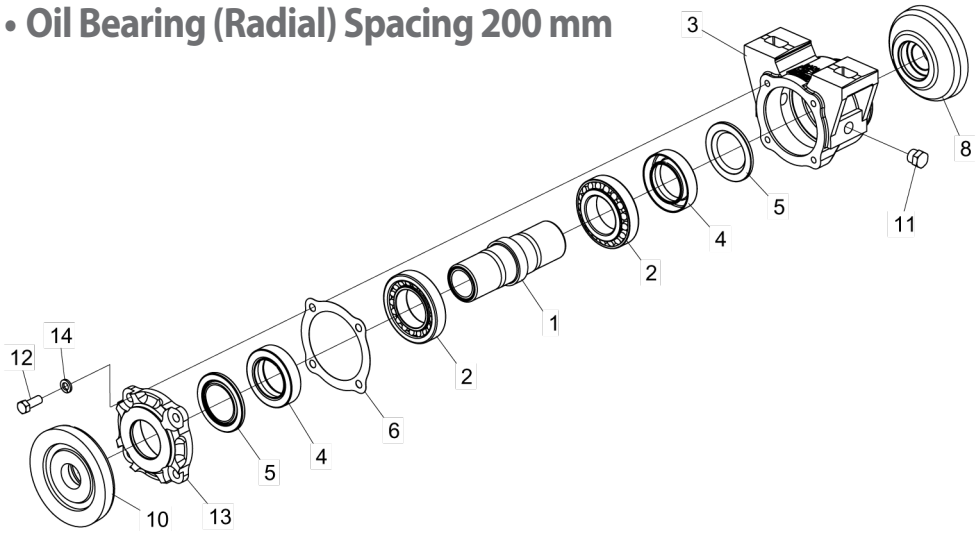

Item	Code	Product description	All
1	5080010284-4	Bearing Bushing For Shaftø1.1/4"	1
2	6020350054-0	Bearing 30210	2
3	5368010077-9	Spare Front/Rear Oil Bearing (Without Protection	1
4	6020350291-8	Retainer Ø49,00 X Ø76,00 X 17,50Mm	2
5	6020010472-5	Washer 1199(Joinseal)-1002(Arca)	2
6	6020190104-1	Gascket Ø90 X Ø134 X 1/64"	4
8	5024060036-3	Washer Of 200Mm	1
10	5024060035-5	Concave Back Washer 200Mm	1
11	5081010007-6	Hexagonal Head Plug 3/4" - R.3/8" - 19F - Bspt(Gas)	2
12	6020310021-6	Hexagonal Head Bolt 3/8" X 1" 16F Unc1A Gr5 Rt	4
13	5538010031-1	Bearing Cover	1
14	6020010406-7	Pressure Washer 3/8" Media Industry	4

• Axial Bearing (Spacing 175 mm)

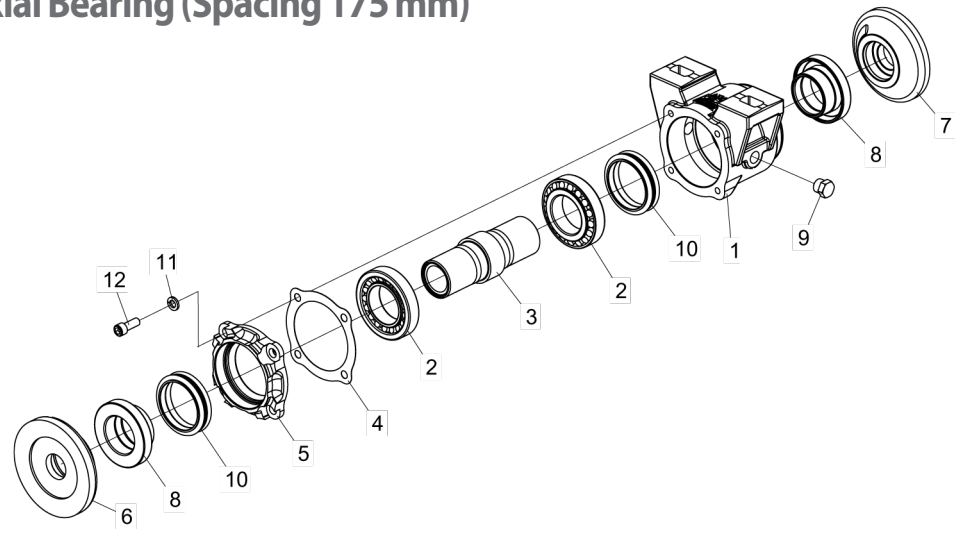

Item	Code	Product description	All
1	5368010406-5	Dnt/trs Single Axial Bearing Without Protection	1
2	6020350054-0	Tapered Bearing 30210	2
3	5080010320-4	Thrust Bearing Bushing	1
4	6020190104-1	Paper Joint Ø90 x Ø134 x 1/64"	3
5	5538016078-0	Bearing Cover	1
6	5024010743-8	190Mm Concave thrust washer	1
7	5024010742-0	190Mm Convex Stop Washer	1
8	5080010319-0	Axial Overlapping Bushing	2
9	5081010007-6	Hex Plug 3/4" - R.3/8" - 19F - Bspt(Gas)	2
10	6020010992-1	Axial sealing ring Ø62 x Ø78Mm	2
11	6020010406-7	Pressure Washer 3/8" Medium Industrial	4
12	6020310189-1	Allen Screw C/C 3/8" X 1" 16F Unc1A Rt	4

• Friction Bearing(Spacing 175 mm)

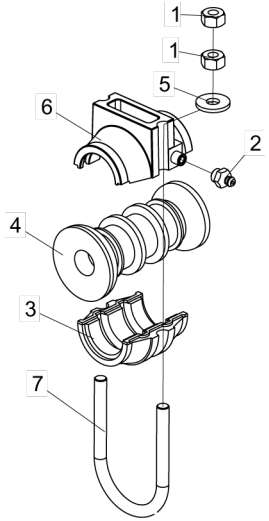

Item	Code	Product description	All
1	6020310760-1	Hexagonal Nut 5/8" 11F Unc Gr5 Ch.1.1/16" Height 15,00Mm	4
2	6020130108-7	Grease Fitting 1/8"	1
3	6010600061-4	Lower Friction Bearing	1
4	6010600101-7	Spool With Ring	1
5	5024010298-3	Smooth Washer Ø17 X Ø44 X 4,75Mm	2
6	5368020014-5	Upper Friction Bearing	1
7	5068010059-1	Clamp Ø5/8" X 111Mm	1

• Stickers

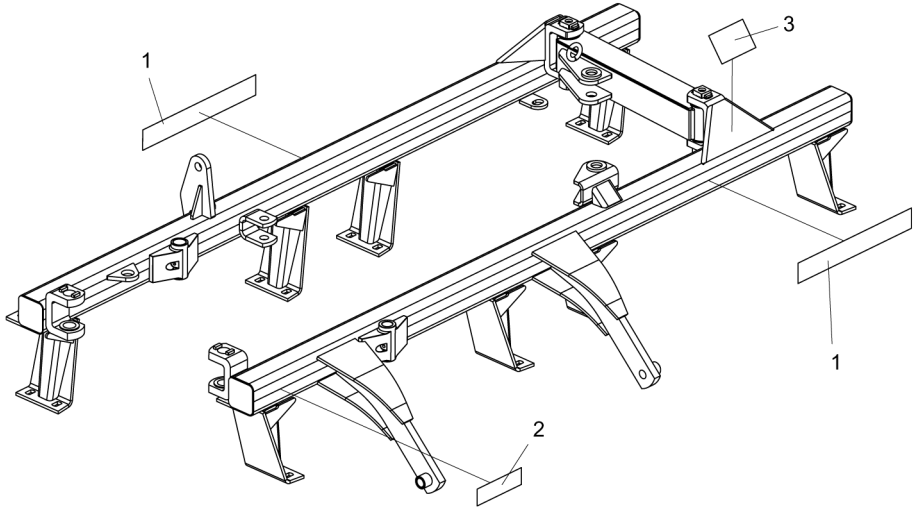

Item	Code	Product description	All
1	6020071111-7	Sticker Nv-Baldan (500 X 70Mm)	2
2	6020070886-8	Sticker Lubricate And Retighten (58 X 195Mm)	1
3	5206010310-0	Sticker Disc Warning (150 X 95Mm)	1

Item 1

Item 2

Item 3

BALDAN

Avenida Baldan, 1500
Nova Matão
15.993-900
Matão/SP - Brasil
sac@baldan.com.br
export@baldan.com.br

+55 16 3221 6500
baldan.com.br