Parts Catalog

FERTILIZA

Fertilizer Spreader
Suitable For Precision Agriculture

BALDAN

Index

Fertiliza 9000 and 12000 4
Table Fertiliza 9000 and 12000 5
Main Frame 9000 and 12000 6
Complete Gang (Inox) 7
Wheel Support 8
Front Wheel Support 9
Rear Wheel Support 10
Complete Wheel Hub 11
Hitch Drawbar 12
Rod of Chains 12
Support W/Adjustment Cover 13
Conveyor 14
Small Roller Of Conveyor 5502010140-6 15
Small Roller Of Conveyor 5502010062-0 15
Complete Hydraulic System (Var. Rate) 16
Table Complete Hydraulic System (Var. Rate) 17
Complete Command Block 18
Complete Hydraulic Pump Of Gear 18
Complete Oil Hopper 19
Stair 19
Complete Grainy Disc 20
Complete Disc For Fertilizer Powder 20
Pipe For Ply 21
Complete Screen 21
Radiator Protection With Cover 21
Complete Fixation Support Of Discs 22
Fertilizer Rightection Support 22
Central Rightection Support 23
Conductor Support 23
Finish Cover W/ Inox Fixation Support 24
Complete Transmission System 25
Complete Triple Box 26
Table Complete Triple Box 27
Complete Reduction Box 28
Table Complete Reduction Box 29
Assembled ISOBUS Box Agrosystem 30
IsoView Fertilizer Control Assembly – Agres 30
Agrosystem ISOBUS Fertilizer Distributor Control Assembly 31
Electronic System AgroSystem Fix Rate 32
Electronic System Raven Var. Rate 33
Electronic System Trimble Var. Rate 34
IsoView Fertilizer Control Monitor Kit – Agres 35
Electronic System Raven Isobus 36
Stickers Fertiliza 9000 37
Stickers Fertiliza 12000 38
Stickers 39
Warning Stickers 40

• Fertiliza 9000 and 12000

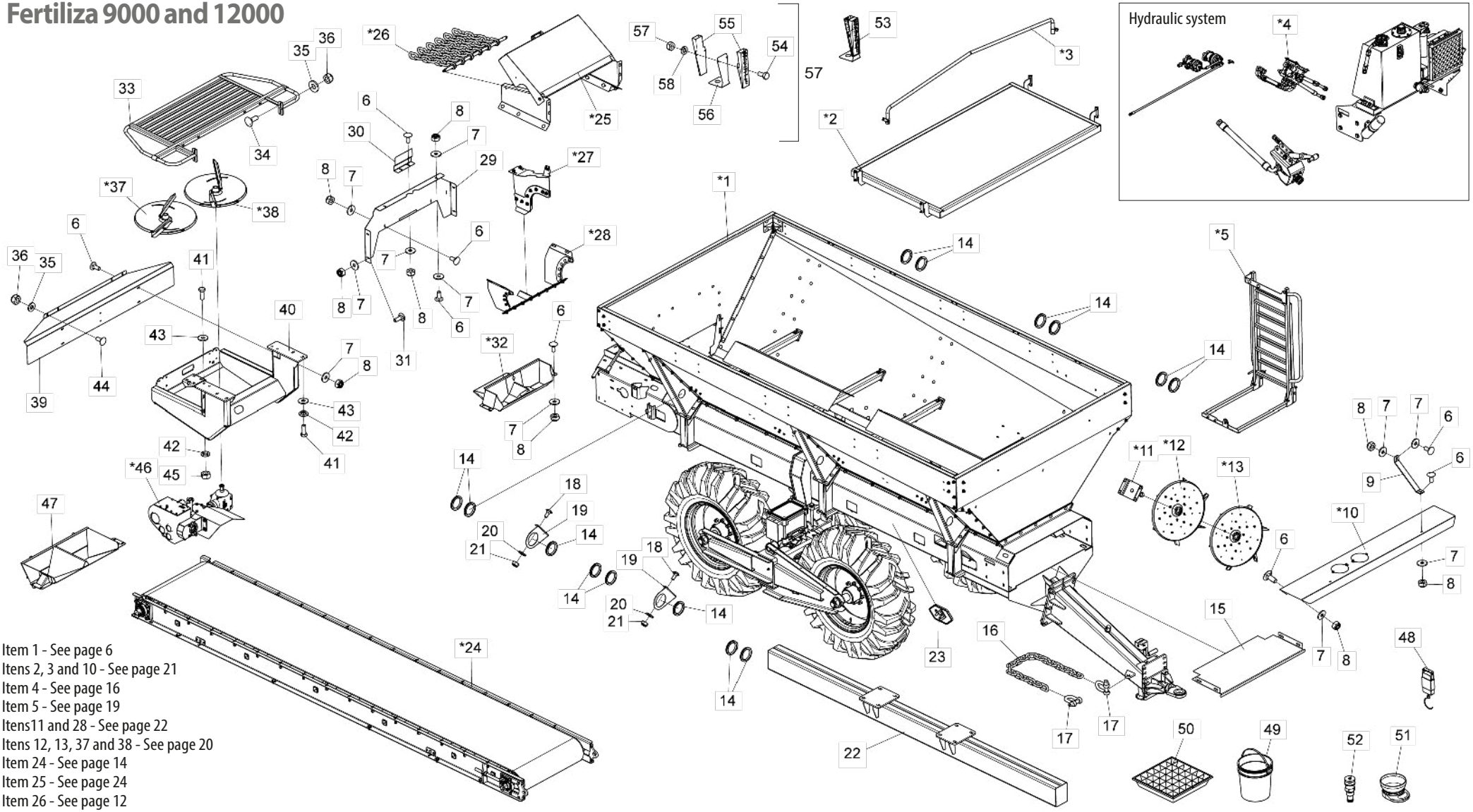

* Item 1 - See page 6
* Itens 2, 3 and 10 - See page 21
* Item 4 - See page 16
* Item 5 - See page 19
* Itens11 and 28 - See page 22
* Itens 12, 13, 37 and 38 - See page 20
* Item 24 - See page 14
* Item 25 - See page 24
* Item 26 - See page 12
* Itens 27 and 32 - See page 23
* Item 46 - See page 25

• Table Fertiliza 9000 and 12000

Item	Code	Product description	All	9000 W/Tire 12.5/80-18" TL 10 Tarps	9000 W/Tire 12.4"-24"	12000 W/Tire 14.9.24 12 Tarps
*1	5404011249-1	Complete Main Frame Dfapb (Fertiliza 9000 Inox)		1		
*1	5404011272-6	Complete Amount Dfapb (Fertiliza 9000 Inox)			1	
*1	5404011237-8	Complete Main Frame Dfapb (Fertiliza 12000 Inox)				1
*2	5542010044-1	Complete Screen		3	3	4
*3	5108010933-8	Complete Pipe For Ply		4	4	5
*4	5528011122-7	Sistema Hidráulico Completo Taxa Variável		1	1	
*4	5528011121-9	Sistema Hidráulico Completo Taxa Variável				1
5	5259010111-7	Complete Ladder Fertilizes	1			
6	6020310172-7	French Head Bolt Inox M10 X 1,50 X 25mm Ma Rt		23	23	25
7	6020015800-0	Plain Inox Washer Ø10,5 X Ø30 X 3,00mm		27	31	34
8	6020310815-2	Self-Locking Inox Hexagonal Nut With Nylon Low M10 X 1,50 Ma Ch.17mm		23	25	25
9	5530019546-5	Protection Stabilizer Support	2			
*10	5464010368-2	Radiator Protection With Cover	1			
*11	5530016315-6	Complete Fixation Support Of Discs	1			
*12	5220010147-2	Complete Right Disc For Fertilizer Powder	1			
*13	5220010148-0	Complete Left Distributor Fertilizer Powder Disc	1			
14	5464010359-3	Protection With Hose	14			
15	5464010786-6	Front Protection	1			
16	6020055442-9	Chain 3/4" Galvanised Peca S/18 Links 110 X 69	1			
17	6020250563-8	Straight Handle 7/8" Pin With Thread	2			
18	6020311192-7	French Head Bolt Inox M8 X 1,25 X 20mm Ma Rt (Without Nut)	4			
19	5530016651-1	Back Support of Hoses	2			
20	6020010431-8	Plain Inox Washer Ø8,5 X Ø18 X 1,8mm	4			
21	6020310850-0	Self-Locking Inox Hexagonal Nut With Nylon Low M8 X 1,25 Ma Ch.13mm	4			
22	5530020321-2	Rocker Arm Fixing Bracket (Maximum Gauge 3200)	1			
23	6020095955-0	Emblem 99.8 X 189.1mm	2			
*24	5265010020-4	Complete Conveyor (Fertiliza 9000)		1	1	
*24	5265010021-2	Complete Conveyor (Fertiliza 12000)				1
*25	5538015934-0	Finishing Lid With Stainless Steel Fixing Bracket	1			
*26	5566010290-5	Complete Rod With Chain	1			
*27	5530016034-3	Complete Central Rightection Support	1			
*28	5530019579-1	Fertilizer Rightecting Support	1			
29	5136017046-6	Complete Back Plate	1			
30	5136016974-3	Deflector Plate For Fertilizer Powder	1			

Item	Code	Product description	All	9000 W/Tire 12.5/80-18" TL 10 Tarps	9000 W/Tire 12.4"-24"	12000 W/Tire 14.9.24 12 Tarps
31	6020310061-5	French Head Bolt Inox M10 X 1,50 X 30mm Ma Rt	4			
*32	5530016238-9	Complete Conductor Support	1			
33	5464010440-9	Rotating Disc Protection	1			
34	6020311198-6	French Head Bolt Inox M12 X 1,75 X 35mm Ma Rt (Without Nut)	4			
35	6020015801-9	Plain Inox Washer Ø12,5 X Ø27 X 3,00mm	8			
36	6020310851-9	Self-Locking Inox Hexagonal Nut With Nylon Low M12 X 1,75 Ma Ch.19mm	8			
*37	5220010143-0	Disco Complete Righteito Granualdo	1			
*38	5220010145-6	Complete Left Disc Granualdo	1			
39	5572016609-6	Beam "U" Of Inox Protection	1			
40	5530016025-4	Rear Support Of Triple Box	1			
41	6020311270-2	Hexagonal Head Bolt M16 X 2,00 X 45mm Cl8.8 Rt	8			
42	6020010124-6	Pressure Washer M16 Media	8			
43	5024010298-3	Smooth Washer Ø17 X Ø44 X 4,75mm	8			
44	6020311193-5	French Head Bolt Inox M12 X 1,75 X 30mm Ma Rt (Without Nut)	4			
45	6020310818-7	Hexagonal Nut M16 X 2,00 Ma Cl8 Ch.24mm H.13,00mm	4			
*46	5528010911-7	Complete Transmiion System	1			
47	5294010002-0	Funnel Collector	1			
48	6020030776-6	Albatroz Portable Digital Balance - Hook 40Kg	1			
49	6020030778-2	Plastic Bucket 18 Liters	2			
50	6020030772-3	Tray With Grid For Harvesting	8			
51	6020030777-4	Cooking Digital Balance With Bowl 5Kg	1			
52	6020430307-2	Flow Adjustment Mec+A8916:D44056Hanic Valve(Nv12-20B-0-N)	1			
53	5530016391-1	Complete Pluviometer Support	1			
54	6020310889-6	Inox Head Hexagonal Bolt 1/4" X 5/8" 20F Unc2A RT	2			
55	6020310344-4	Wedge Pluviometer (Batcher Cup)	2			
56	5136016518-7	Support Plate Of Pluviometer	1			
57	6020310766-0	Brass Hexagonal Nut 1/4" 20F Unc Ch.7/16" H.5,50mm	2			
58	6020010402-4	Pressure Washer 1/4" Media Industry	2			

• Main Frame 9000 and 12000

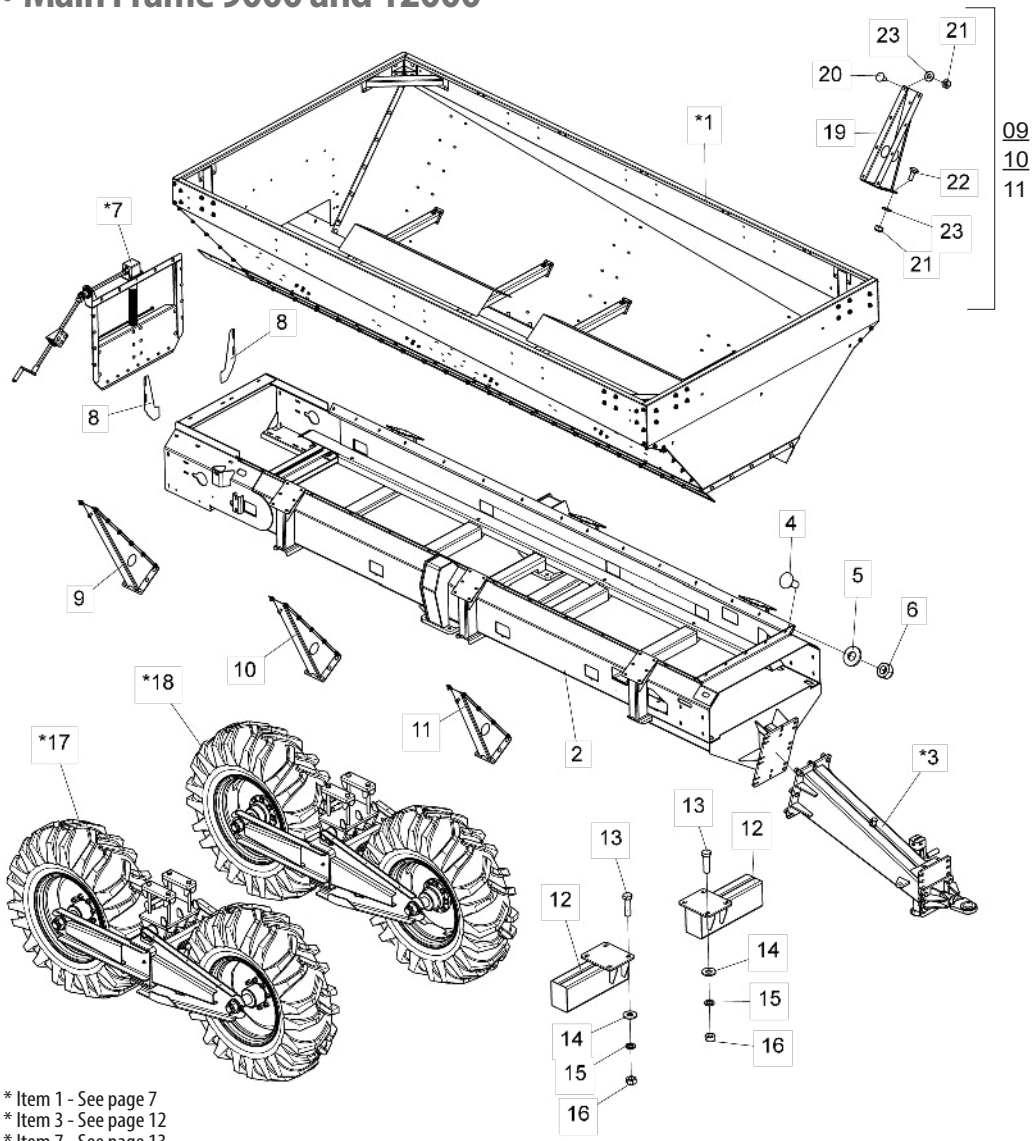

* Item 1 - See page 7
* Item 3 - See page 12
* Item 7 - See page 13
* Itens 17 and 18 - See page 8

Item	Code	Product description	All	9000 W/Tire 12.5/80-18" TL 10 Tarps	9000 W/Tire 12.4"-24"	12000 W/Tire 14.9.24 12 Tarps
*1	5091010164-9	Complete Bucket (Inox) Fertiliza 9000		1	1	
*1	5091010162-2	Complete Bucket (Inox) Fertiliza 12000				1
2	5404011250-5	Main Frame (Fertiliza 9000)		1		
2	5404011273-4	Amount (Fertiliza 9000)			1	
2	5404011238-6	Main Frame (Fertiliza 12000)				1
*3	5084010229-4	Complete Hitch Drawbar	1			
4	6020310140-9	French Head Bolt M12 X 1,75 X 35mm Cl8.8 Rp		22	22	30
5	6020015801-9	Plain Inox Washer Ø12,5 X Ø27 X 3,00mm		22	22	30
6	6020310851-9	Self-Locking Inox Hexagonal Nut With Nylon Low M12 X 1,75 Ma Ch.19mm		22	22	30
*7	5530019538-4	Support With Adjustment Cover	1			
8	5136023301-8	Bucket Support Plate	2			
9	5530019530-9	Complete Bucket Support Bracket	2			
10	5530019529-5	Complete Bucket Support Bracket	2			
11	5530019934-7	Complete Front Bucket Support Bracket		2	2	
11	5530019532-5	Complete Bucket Support Bracket				2
12	5530020322-0	Transport Support	2			
13	6020310177-8	Hex Head Screw M20 X 2.50 X 70mm Cl10.9 Rp	8			
14	5024010314-9	Smooth Washer Ø21 X Ø46 X 4,75mm		8	16	8
15	6020010403-2	Pressure Washer M20 Media		8		8
16	6020311265-6	Hexagonal Nut M20 X 2,50 Ma Cl8 Ch.30mm H.16,00mm	8			
*17	5530020369-7	Complete Right Wheel Support		1		
*17	5530020413-8	Complete Right Wheel Support			1	
*17	5530019966-5	Complete Right Wheel Support				1
*18	5530020370-0	Complete Left Wheel Support		1		
*18	5530020414-6	Complete Left Wheel Support			1	
*18	5530019957-6	Complete Left Wheel Support				1
19	5530019528-7	Gang Back Support	2			
19	5530019531-7	Gang Back Support	2			
19	5530019533-3	Gang Back Support	2			
20	6020310172-7	French Head Bolt Inox M10 X 1,50 X 25mm Ma Rt	60			
21	6020310815-2	Self-Locking Inox Hexagonal Nut With Nylon Low M10 X 1,50 Ma Ch.17mm	48			
22	6020310061-5	French Head Bolt Inox M10 X 1,50 X 30mm Ma Rt	36			
23	6020015801-9	Plain Inox Washer Ø12,5 X Ø27 X 3,00mm	48			

• Complete Gang (Inox)

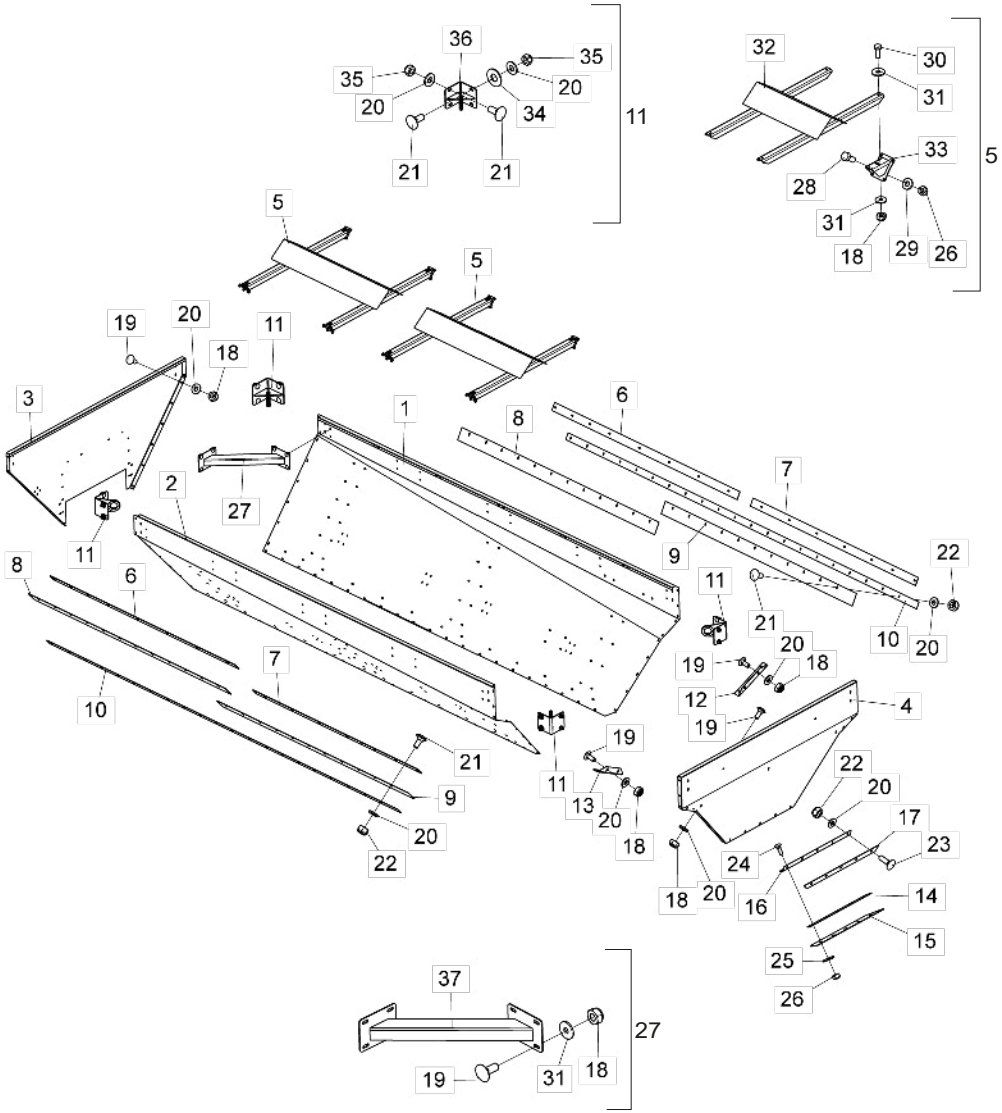

Item	Code	Product description	All	Fertiliza 9000	Fertiliza 12000
1	5136023485-5	Bucket Right Side Plate		1	
1	5136023287-9	Bucket Right Side Plate			1
2	5136023484-7	Bucket Right Side Plate		1	
2	5136023288-7	Bucket Right Side Plate			1
3	5136023286-0	Rear Bucket Plate	1		
4	5136023289-5	Front Bucket Plate	1		
5	5207010085-1	Complete Load Deflector		2	
5	5207010081-9	Complete Load Deflector			2
6	6020310360-6	Protection 76 X 1/4" X 3308mm		2	
6	6020317568-2	Protection 76 X 2309mm X 1/4"			2
7	6020317567-4	Protection 76 X 2058mm X 1/4"			2
8	6020317936-0	Rubber protection of 120 X 3/16″X 3773mm		2	
8	6020317928-9	Protection Of 110 X 3/16″X 2450mm			2
9	6020317927-0	Protection Of 120 X 3/16″X 2384mm			2
10	5136023486-3	Protection Fixing Plate		2	
10	5136023297-6	Protection Fixing Plate			2
11	5530019599-6	Complete Lifting Support	4		
12	5136023302-6	Left Union Plate	1		
13	5136023303-4	Right Union Plate	1		
14	5136023294-1	Support Plate From Rubber	1		
15	6020317926-2	Bucket Front Protection	1		
16	5136023295-0	Front Rubber Fixing Plate	1		
17	6020317931-9	Rubber Protection 50 X 930mm X 1/4″	1		
18	6020310815-2	Self-Locking Inox Hexagonal Nut With Nylon Low M10 X 1,50 Ma Ch.17mm	52		
19	6020310172-7	French Head Bolt Inox M10 X 1,50 X 25mm Ma Rt	44		
20	6020015801-9	Plain Inox Washer Ø12,5 X Ø27 X 3,00mm		93	99
21	6020311193-5	French Head Bolt Inox M12 X 1,75 X 30mm Ma Rt (Without Nut)		52	58
22	6020310851-9	Self-Locking Inox Hexagonal Nut With Nylon Low M12 X 1,75 Ma Ch.19mm		41	47
23	6020310148-4	French Head Bolt Inox M12 X 1,75 X 40mm Ma Rt	5		
24	6020310069-0	French Head Bolt Inox M8 X 1,25 X 25mm Ma Rt (Without Nut)	5		
25	5024010428-5	Stainless Smooth Washer Of Ø10,50 X Ø40 X 2,50mm	5		
26	6020310850-0	Self-Locking Inox Hexagonal Nut With Nylon Low M8 X 1,25 Ma Ch.13mm	37		
27	5558010688-8	Complete Bucket Lock	4		
28	6020310170-0	Hexagonal Head Bolt Inox M8 X 1,25 X 20mm Cl 8.8 Rt	32		
29	6020015799-3	Plain Inox Washer Ø8,5 X Ø18 X 3,00mm	32		
30	6020310171-9	Hexagonal Head Bolt Inox M10 X 1,50 X 30mm Ma Rt	8		
31	6020015800-0	Plain Inox Washer Ø10,5 X Ø30 X 3,00mm	24		
32	5207010080-0	Load Deflector		2	
32	5207010082-7	Load Deflector			2
33	5530019536-8	Deflector Fixing Support	8		
34	5024010639-3	Stainless Smooth Washer Of Ø17 X Ø30 X 4,00mm	4		
34	6020015987-2	Smooth Washer Ø17,00 X Ø38,00 X 2,50mm (Din 994 Ø5/8″)	4		
35	6020310847-0	Self-Locking Nut With Nylon M12 X 1 ,75 Ma Cl8 Ch.19mm H.12,00mm	16		
36	5530015244-8	Lifting Support	4		
37	5558010687-0	Bucket Lock	1		

• Wheel Support

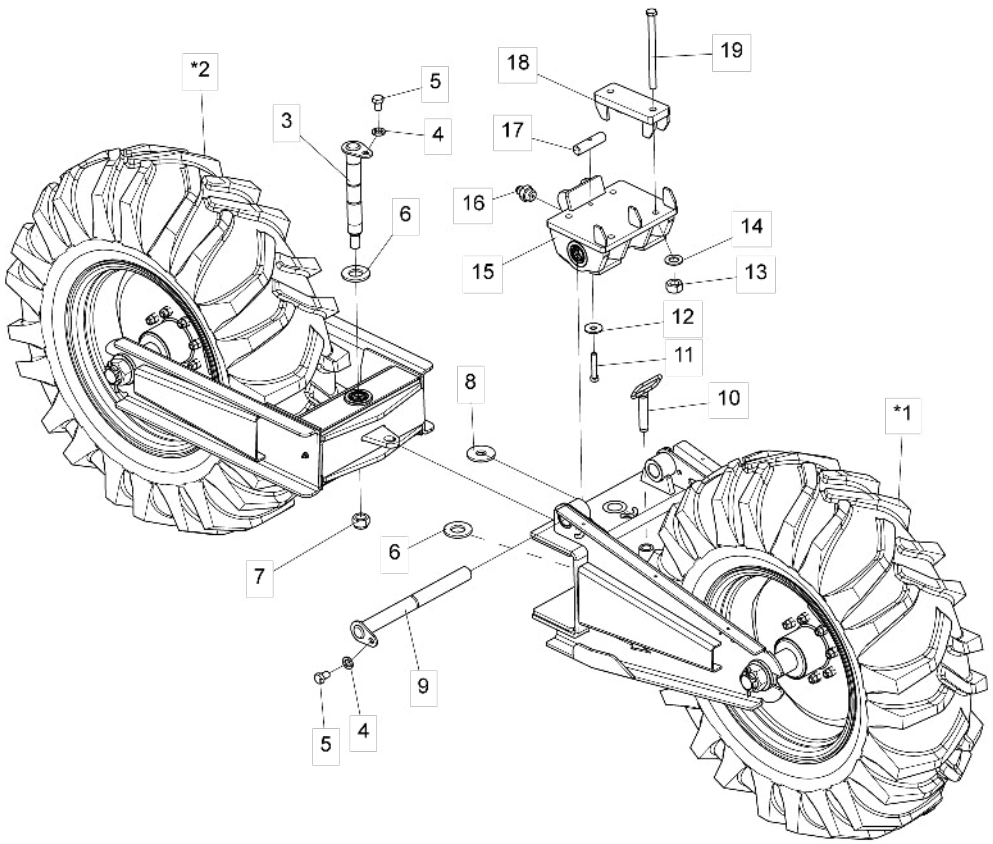

Item	Code	Product description	All	Right 9000 W/Tire 12.5/80-18"TL 10 Tarps	Right 9000 W/Tire 12.4"-24"	Right 12000 W/Tire 14.9.24 12 Tarps	Left 9000 W/Tire 12.5/80-18"TL 10 Tarps	Left 9000 W/Tire 12.4"-24"	Left 12000 W/Tire 14.9.24 12 Tarps
*1	5530020371-9	Front Right Wheel Support		1					
*1	5530020411-1	Front Right Wheel Support			1				
*1	5530019964-9	Front Right Wheel Support				1			
*1	5530020372-7	Front Left Wheel Support					1		
*1	5530020412-0	Front Left Wheel Support						1	
*1	5530019958-4	Front Left Wheel Support							1
*2	5530020373-5	Rear Right Wheel Support		1					
*2	5530020409-0	Rear Right Wheel Support			1				
*2	5530019965-7	Rear Right Wheel Support				1			
*2	5530020374-3	Rear Left Wheel Support					1		
*2	5530020410-3	Rear Left Wheel Support						1	
*2	5530019954-1	Rear Left Wheel Support							1
3	5432011244-6	Wheel Support Center Pin	1						
4	6020010124-6	Pressure Washer M16 Media	2						
5	6020310897-7	Hexagonal Head Bolt M16 X 2,00 X 25mm Cl8.8 Rt	2						
6	5024010624-5	Smooth Washer Ø45,20 X Ø87 X 7,50mm	2						
7	6020310451-3	Self-locking Hex Nut with Nylon High M30 X 3.50 Ma Cl8 Ch.46mm Alt.32.00mm	1						
8	5024010948-1	Washer Ø30.3 X Ø87 X 7.5mm	1						
9	5432010457-5	Articulation Lateral Pin		1	1		1	1	
9	5432010491-5	Articulation Lateral Pin				1			1
10	5432010574-1	Pin with handle	1						
11	6020310978-7	Hex Socket Cap Screw M12 X 1.75 X 70mm Cl8.8 Rt	1						
12	6020010442-3	Flat Washer M12 Ø13.00 X Ø37.00 X 3.00mm	1						
13	6020311265-6	Hexagonal Nut M20 X 2,50 Ma Cl8 Ch.30mm H.16,00mm	4						
14	6020015986-4	Smooth Washer M20 (Ø21 x Ø37 x 3mm) Standart DIN 125	4						
15	5530019955-0	Wheelset Joint Support	1						
16	6020130108-7	Grease Fitting 1/8"	1						
17	5232012851-0	Support Axis	1						
18	5044010549-9	Fixing Support Base	2						
19	6020310045-3	Hexagonal Head Bolt M20 X 2,50 X 270mm Cl8.8 Rp	4						

* Item 1 - See page 9
* Item 2 - See page 10

• Front Wheel Support

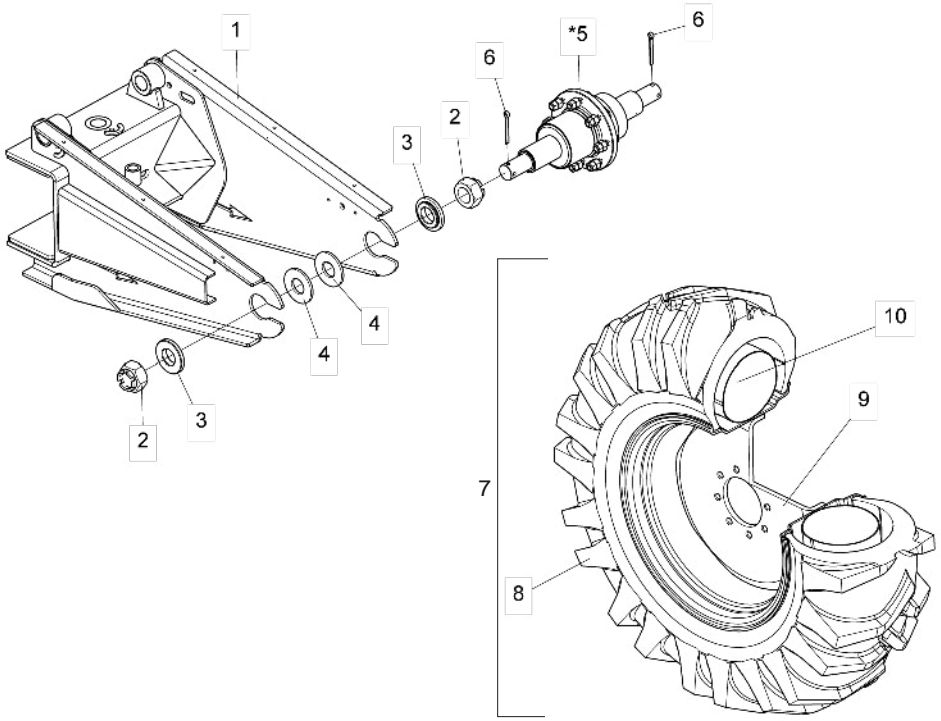

Item	Code	Product description	All	Right 9000 W/Tire 12.5/80-18" TL 10 Tarps	Right 9000 W/Tire 12.4"-24"	Right 12000 W/Tire 14.9.24 12 Tarps	Left 9000 W/Tire 12.5/80-18" TL 10 Tarps	Left 9000 W/Tire 12.4"-24"	Left 12000 W/Tire 14.9.24 12 Tarps
1	5530020375-1	Front Wheel Support		1			1		
1	5530020415-4	Front Wheel Support			1			1	
1	5530019959-2	Front Wheel Support				1			1
2	6020310836-5	Nut M48 X 5,00 Ma Cl8 Ch.75mm Height 50,00mm With Crown	2						
3	5080011278-5	Cube Bushing	2						
4	5024010561-3	Smooth Washer Ø49 X Ø106 X 8,00mm	2						
*5	5204010420-8	Complete Wheel Hub		1	1		1	1	
*5	5204010427-5	Complete Wheel Hub				1			1
6	6020050126-0	Cotterpin 3/8" X 3.1/2"	2						
7	5498010205-2	Wheel 12.5/80-18 Tl 10 Right Complete Ply		1					
7	5498010206-0	Wheel 12.5/80-18 Tl 10 Left Complete Ply					1		
7	5498010193-5	Right Wheel (12.4"-24)			1				
7	5498010194-3	Left Wheel (12.4"-24)						1	
7	5498010325-3	Full Wheel Right				1			
7	5498010326-1	Left Complete Wheel							1
8	6020310385-1	Tyre 12.5/80-18 Tl 10 Linings		1	1				
8	6020310383-5	Tire 12.4.24 for W10" Wheel (10 Plies)				1	1		
8	6020310384-3	Tyre R1 14.9-24 (378 X 1265 12 Linings)						1	1
9	6020350925-4	Wheel W9" X 18" For Tyre 12.5/80-18 Central Hole Ø153 Centralized Flange		1	1				
9	6020350921-1	W10" X 24" Wheel for Tire 12.4.24				1	1		
9	6020350996-3	Wheel W5" x 12" x 24" OffSet 8mm For Tire 14.9.24 With Central Hole Ø153mm						1	1
10	6020055397-0	Air Chamber 12.4.24				1	1		
10	6020055426-7	Inner Tube 14.9-24 Valve Tr 15						1	1

* Item 5 - See page 11

• Rear Wheel Support

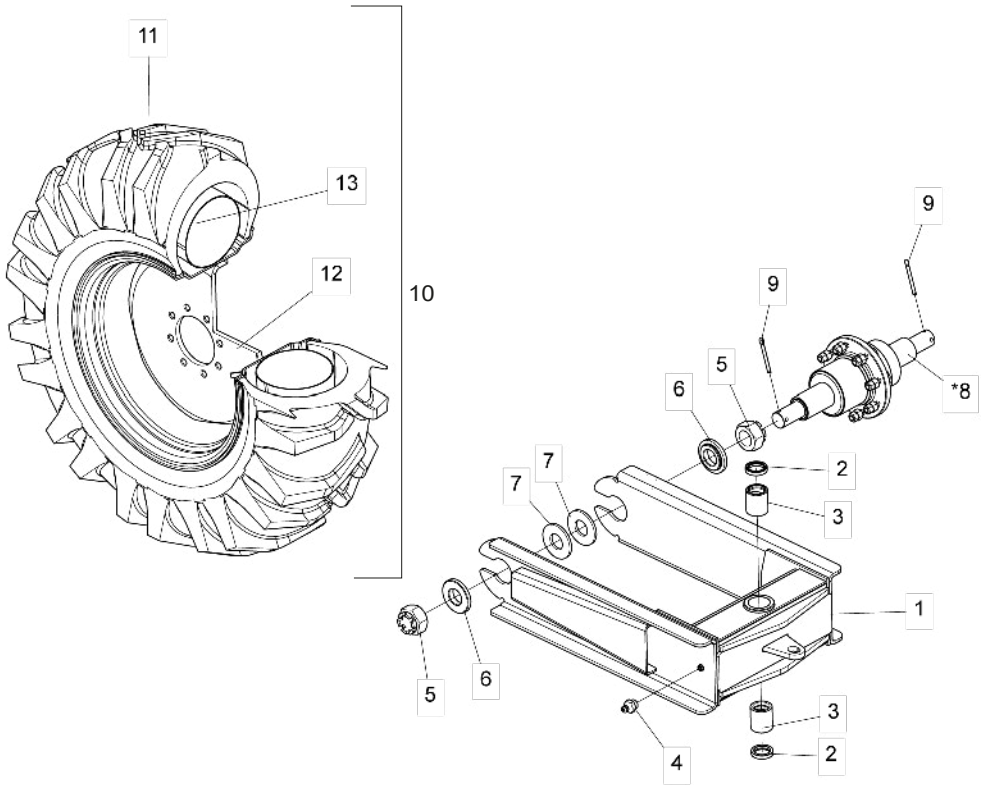

Item	Code	Product description	All	Rlight 9000 W/Tire 12.5/80-18" TL 10 Tars	Rlight 9000 W/Tire 12.4"-24"	Rlight 12000 W/Tire 14.9.24 12 Tars	Left 9000 W/Tire 12.5/80-18" TL 10 Tars	Left 9000 W/Tire 12.4"-24"	Left 12000 W/Tire 14.9.24 12 Tars
1	5530020377-8	Rear Wheel Support		1			1		
1	5530020416-2	Rear Wheel Support			1			1	
1	5530020366-2	Rear Wheel Support				1			
1	5530024641-8	Rear Wheel Support							1
2	6020351142-9	Retainer Ø44.5 X Ø62 X 11.00mm (Arca 5078 Br/Sabo 01095Br)	2						
3	5080013236-0	Bushing Ø44.50 X Ø61.8 X 70mm	2						
4	6020130108-7	Grease Fitting 1/8"	1						
5	6020310836-5	Nut M48 X 5,00 Ma Cl8 Ch.75mm Height 50,00mm With Crown	2						
6	5080011278-5	Cube Bushing	2						
7	5024010561-3	Smooth Washer Ø49 X Ø106 X 8,00mm	2						
*8	5204010420-8	Complete Wheel Hub		1	1		1	1	
*8	5204010427-5	Complete Wheel Hub				1			1
9	6020050126-0	Cotterpin 3/8" X 3.1/2"	2						
10	5498010205-2	Wheel 12.5/80-18 Tl 10 Right Complete Ply		1					
10	5498010206-0	Wheel 12.5/80-18 Tl 10 Left Complete Ply					1		
10	5498010193-5	Right Wheel (12.4"-24)			1				
10	5498010194-3	Left Wheel (12.4"-24)						1	
10	5498010325-3	Full Wheel Right				1			
10	5498010326-1	Left Complete Wheel							1
11	6020310385-1	Tyre 12.5/80-18 Tl 10 Linings		1	1				
11	6020310383-5	Neumatico 12.4.24 P/Rueda W10" (10 Lonas)				1	1		
11	6020310384-3	Tyre R1 14.9-24 (378 X 1265 12 Linings)						1	1
12	6020350925-4	Wheel W9" X 18" For Tyre 12.5/80-18 Central Hole Ø153 Centralized Flange		1	1				
12	6020350921-1	Rueda W10" X 24" P/Neumatico 12.4.24				1	1		
12	6020350996-3	Wheel W5" x 12" x 24" OffSet 8mm For Tire 14.9.24 With Central Hole Ø153mm						1	1
13	6020055397-0	Air Chamber 12.4.24				1	1		
13	6020055426-7	Inner Tube 14.9-24 Valve Tr 15						1	1

* Item 8 - See page 11

• Complete Wheel Hub

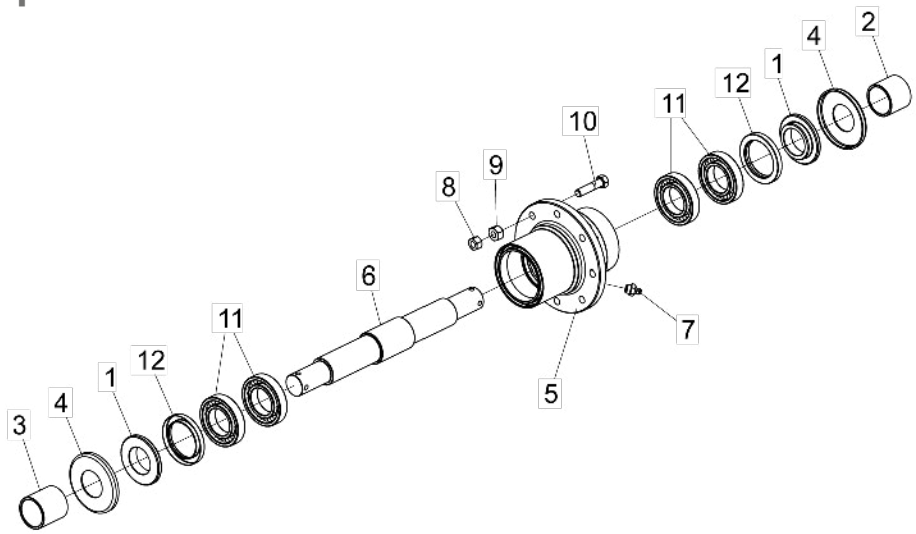

Item	Code	Product description	All	9000	12000
1	5080010379-4	Back Bushing	2		
2	5080011212-2	Backrest Small Bushing Of Wheel Hub		1	
2	5080011279-3	Backrest Small Bushing Of Wheel Hub			1
3	5080011213-0	Backrest Large Bushing Of Wheel Hub		1	
3	5080011280-7	Backrest Large Bushing Of Wheel Hub			1
4	5096010041-4	Cube Protective Cover	2		
5	5204010421-6	Wheel Hub	1		
6	5232011469-1	Wheel Hub Shaft		1	
6	5232011516-7	Wheel Hub Shaft			1
7	6020130108-7	Grease Fitting 1/8"	1		
8	6020310762-8	Hexagonal Nut 5/8" 18F Unf Gr5 Ch.15/16" Height 15,00mm	8		
9	6020310807-1	Conic Hexagonal Nut Of Wheel 5/8" 18F Unf Gr5 Ch.1.1/16" Height 19,00mm	8		
10	6020311078-5	Hexagonal Head Bolt 5/8" X 2.3/4" 18F Unf1A Gr5 Rp	8		
11	6020350070-2	Bearing 6212	4		
12	6020350837-1	Retainer Ø80,00 X Ø110,00 X 12,00mm	2		

• Hitch Drawbar

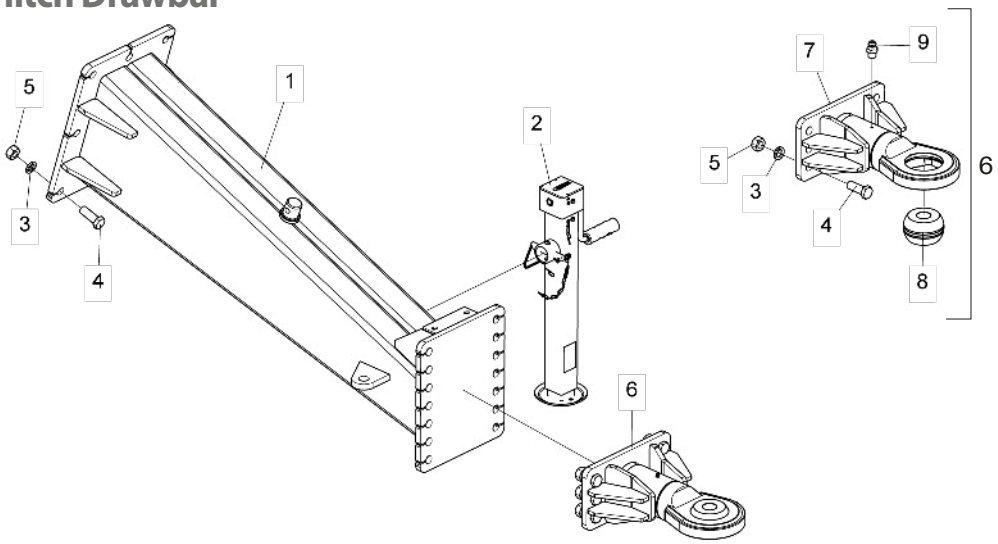

Item	Code	Product description	All
1	5084010230-8	Hitch Drawbar	1
2	6020370264-0	Complete Support Of Lifting	1
3	6020010403-2	Pressure Washer M20 Media	14
4	6020310992-2	Hexagonal Head Bolt M20 X 2,50 X 55mm Cl8.8 Rp	14
5	6020311265-6	Hexagonal Nut M20 X 2,50 Ma Cl8 Ch.30mm H.16,00mm	14
6	5332010145-6	Complete Hitch Shackle	1
7	5332010144-8	Coupling Coupler	1
8	5080013240-9	Nut Bushing Ø35 X Ø4 X 63mm	1
9	6020130100-1	Grease Fitting 1/4" Recta Unf - 28F Alt.14mm Hex. 5/16"	2

• Rod of Chains

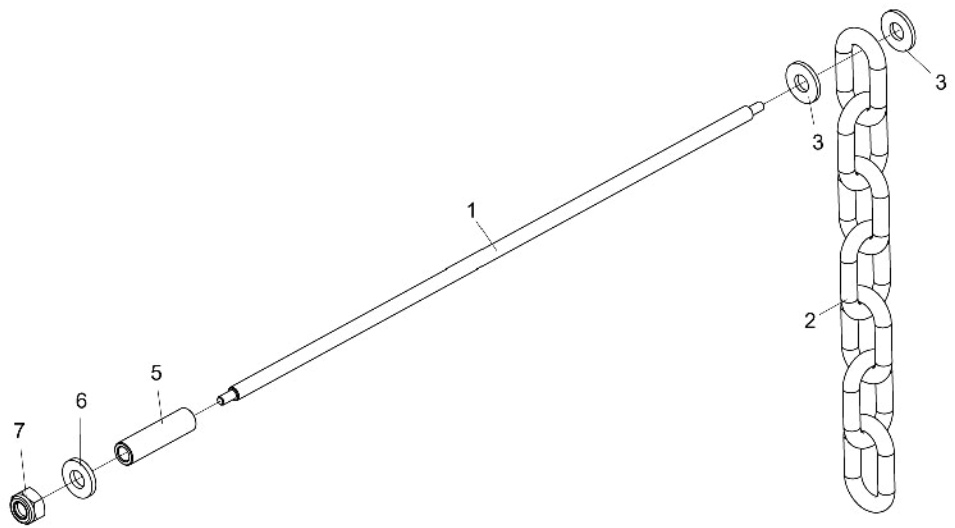

Item	Code	Product description	All
1	5566010291-3	Rod Of Ø5/8" X 830mm	1
2	6020058159-0	Chain 3/4" Galvanised 07 Links 110 X 69	6
3	5024010007-7	Smooth Washer Ø20,3 X Ø46,5 X 4,75mm	12
4	5080010616-5	Bushing Ø16,2 X Ø26,5 X 85mm	5
5	5080011589-0	Rod Spacer Bushing Of Chains	2
6	6020015802-7	Plain Inox Washer Ø10,5 X Ø22 X 3,00mm	2
7	6020310815-2	Self-Locking Inox Hexagonal Nut With Nylon Low M10 X 1,50 Ma Ch.17mm	2

• Support W/Adjustment Cover

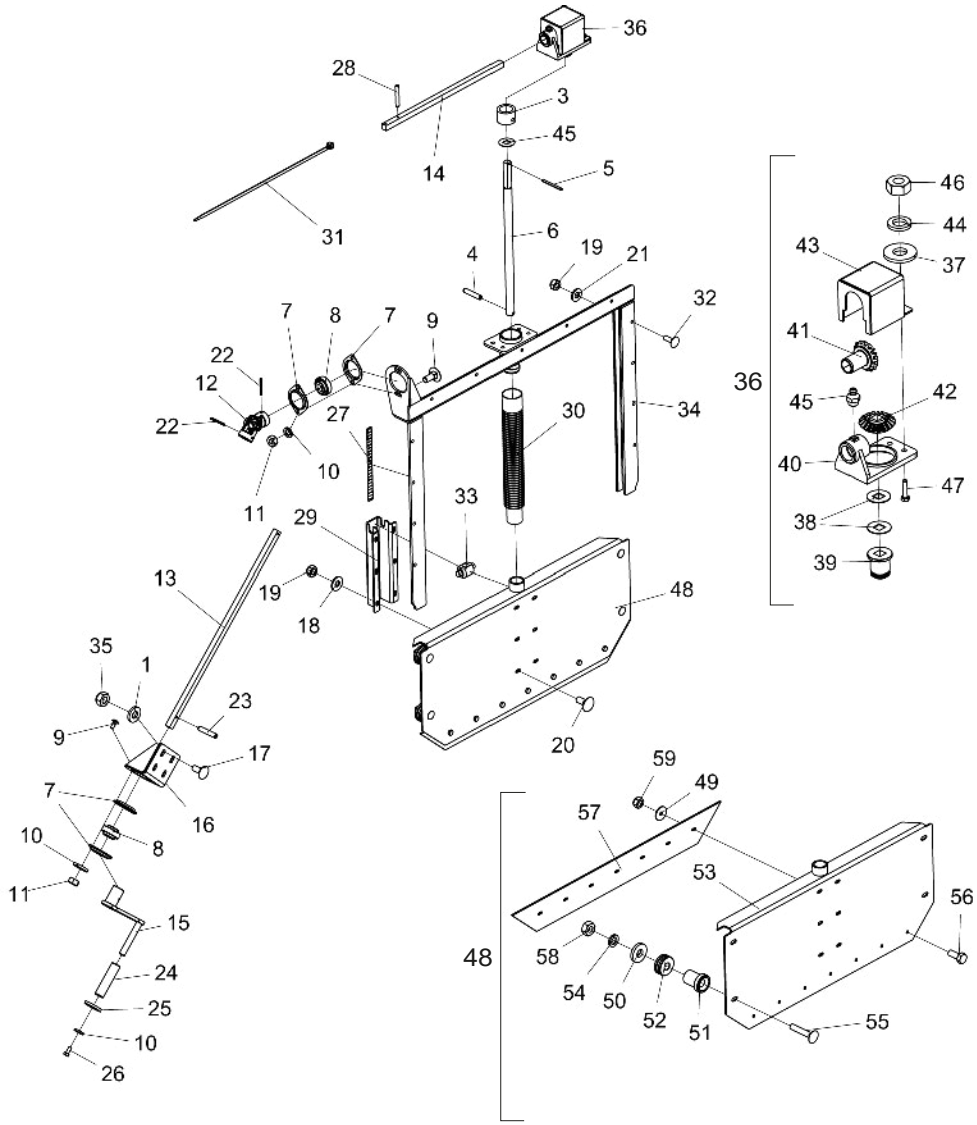

Item	Code	Product description	All
1	6020015802-7	Plain Inox Washer Ø10,5 X Ø22 X 3,00mm	4
2	5024010342-4	Smooth Washer Sq.16,5 X Ø46 X 1,50mm	1
3	6020030084-2	Bushing Ø50 X 35mm Large	1
4	6020310471-8	Heavy Elastic Pin Ø6 X 30mm	1
5	6020310539-0	Heavy Elastic Pin Ø3 X 36mm	1
6	5566010242-5	Rod Of Support Of 482mm	1
7	6020250412-7	Steel Plate Bearing 03.52 Mst	4
8	6020250117-9	Bearing Assy F-110934.1	2
9	6020317452-0	French Head Bolt M8 X 1,25 X 20mm Cl8.8 Rt	4
10	6020010004-5	Pressure Washer M8 Media	5
11	6020310454-8	Hexagonal Nut M8 X 1,25 Ma Cl8 Ch.13mm H.6,50mm	4
12	6020190088-6	Joint Crp-18 Q.16 X 16mm	1
13	5232011486-1	Large Articulation Shaft	1
14	5232011487-0	Small Shaft Of Articulation	1
15	5382010025-1	Complete Handle	1
16	5530015077-1	Guide Support	1
17	6020310172-7	French Head Bolt Inox M10 X 1,50 X 25mm Ma Rt	4
18	5024010073-5	Smooth Washer Ø8,5 X Ø20 X 2,00mm	6
19	6020310850-0	Self-Locking Inox Hexagonal Nut With Nylon Low M8 X 1,25 Ma Ch.13mm	18
20	6020311192-7	French Head Bolt Inox M8 X 1,25 X 20mm Ma Rt (Without Nut)	6
21	6020010431-8	Plain Inox Washer Ø8,5 X Ø18 X 1,8mm	12
22	6020310540-4	Heavy Elastic Pin Ø5 X 50mm	2
23	6020310488-2	Heavy Elastic Pin Ø6 X 32mm	1
24	5080010975-0	Bushing Ø16 X Ø25 X 97mm	1
25	5024010556-7	Smooth Washer Ø8,5 X Ø25 X 3,00mm	1
26	6020311269-9	Hexagonal Head Bolt M8 X 1,25 X 20mm Cl8.8 Rt	1
27	6020090569-8	Graduated Scale - 0 To 22	1
28	6020310501-3	Heavy Elastic Pin Ø5 X 32mm	1
29	5572016376-3	Beam Type "U"(Inox)	1
30	6020250111-0	Rubber Tube Ø38 X Ø50,8 X 400mm	1
31	6020010717-1	Nylon Clamp K-80 (L.540 X W.8,9 X T.2,1mm)	2
32	6020310069-0	French Head Bolt Inox M8 X 1,25 X 25mm Ma Rt (Without Nut)	12
33	5530015935-3	Regulator Support	1
34	5530019539-2	Support Guide Of the Adjustment Cap	1
35	6020310815-2	Self-Locking Inox Hexagonal Nut With Nylon Low M10 X 1,50 Ma Ch.17mm	4
36	5092010500-6	Complete Transmission Box Without Hole	1
37	5024010073-5	Smooth Washer Ø8,5 X Ø20 X 2,00mm	4
38	5024010342-4	Smooth Washer Sq.16,5 X Ø46 X 1,50mm	3
39	5080010286-0	Large Bushing Of Conductor Of Fertilizer	1
40	5092010164-7	Transmission Box	1
41	6020310481-5	Pinion 16 Teeths	1
42	6020310495-5	Pinion 18 Teeths	1
43	5464010369-0	Transmission Protection Of Without Hole	1
44	6020010004-5	Pressure Washer M8 Media	4
45	6020130108-7	Grease Fitting 1/8"	1
46	6020310454-8	Hexagonal Nut M8 X 1,25 Ma Cl8 Ch.13mm H.6,50mm	4
47	6020310560-9	Hexagonal Head Bolt M8 X 1,25 X 35mm Cl8.8 Rt	4
48	5538015932-4	Full Stainless Steel Opening Adjustment Cover	1
49	5024010428-5	Stainless Smooth Washer Of Ø10,50 X Ø40 X 2,50mm	7
50	5024010464-1	Smooth Washer Ø11 X Ø27 X 4,00mm	4
51	5080011222-0	Pulley Bushing	4
52	5506010042-9	Roller Of Cover	4
53	5538015933-2	Stainless Steel Opening Adjustment Cover	1
54	6020010394-0	Pressure Washer M10 Media	4
55	6020310010-0	French Head Bolt M10 X 1,50 X 55mm Cl8.8 Rp	4
56	6020310170-0	Hexagonal Head Bolt Inox M8 X 1,25 X 20mm Cl 8.8 Rt	7
57	6020317929-7	Protection From the Regulatory Port	1
58	6020310822-5	Hexagonal Nut M10 X 1,50 Ma Cl8 Ch.17mm H.8,00mm	4
59	6020310850-0	Self-Locking Inox Hexagonal Nut With Nylon Low M8 X 1,25 Ma Ch.13mm	7

• Conveyor

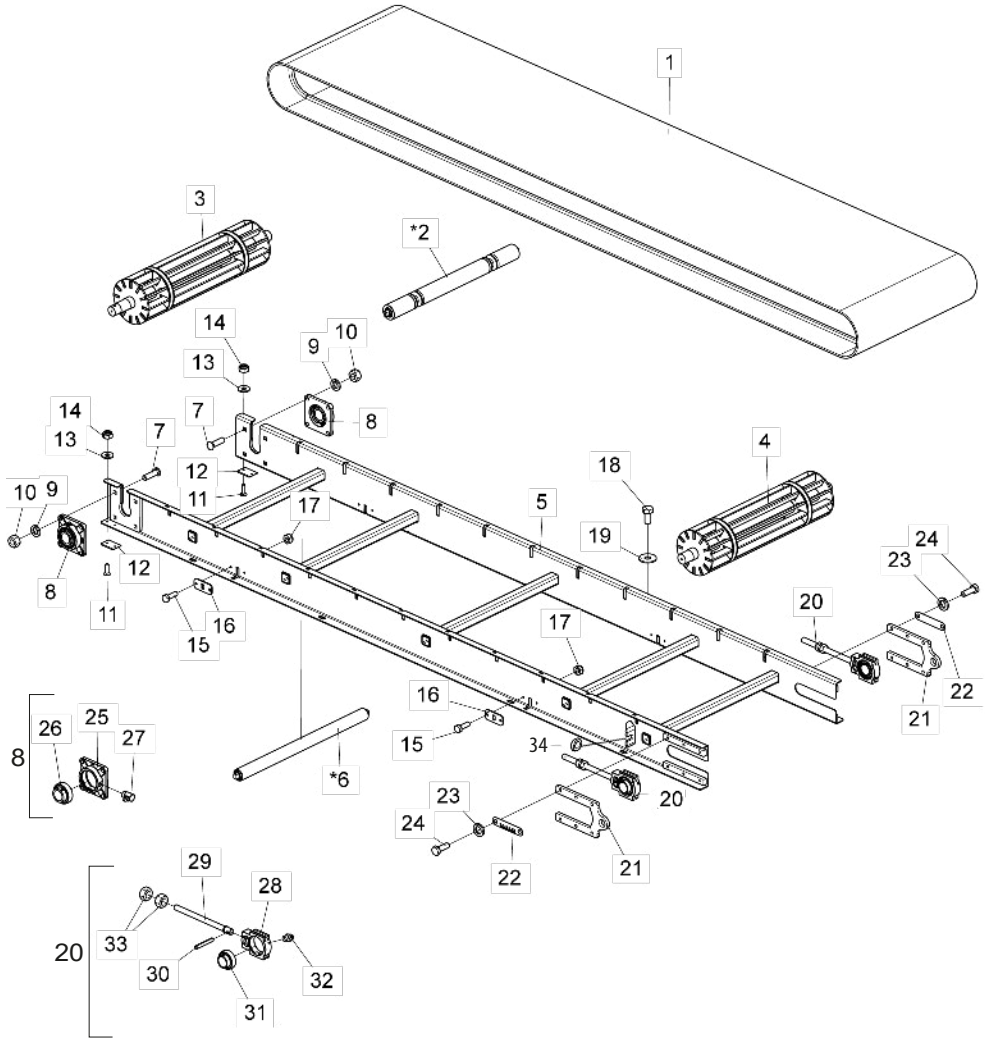

Item	Code	Product description	All	9000	12000
1	6020059322-0	Fertilizer Conveyor Belt		1	
1	6020059323-8	Fertilizer Conveyor Belt			1
*2	5502010140-6	Minor Roller From the Belt Complete		11	15
3	5502010141-4	Complete Front Roller	1		
4	5502010142-2	Complete Rear Roller	1		
5	5530018071-9	Support Of Coneyor		1	
5	5530018072-7	Support Of Coneyor			1
*6	5502010062-0	Small Roller Of Conveyor	2		
7	6020311185-4	French Head Bolt 5/8" X 2.1/4" 11F Unc1A Gr5 Rp	8		
8	5368010645-9	Bearing Fx-10	2		
9	6020010412-1	Pressure Washer 5/8" Media Industry	8		
10	6020310765-2	Hexagonal Nut 5/8" 11F Unc Gr5 Ch.15/16" Height 14,00mm	8		
11	6020317441-4	Machine Thread Screw Flat Head Single Slot M6 X 1.00 X 20mm Cl8.8 Rt	4		
12	5044010346-1	Support Base Of Conveyor	2		
13	5024010161-8	Smooth Washer Ø7 X Ø18 X 2,00mm	4		
14	6020317442-2	Self-Locking Nut With Nylon Low M6 X 1,00 Ma Cl8 Ch.10mm H.6,00mm	4		
15	6020310448-3	Hexagonal Head Bolt M8 X 1,25 X 25mm Cl8.8 Rt	8		
16	5558010579-2	Lower Lock Of Roller	4		
17	6020317449-0	Self-Locking Nut With Nylon Low M8 X 1,25 Ma Cl8 Ch.13mm H.8,00mm	8		
18	6020317553-4	Hexagonal Head Bolt M14 X 2,00 X 30mm Cl8.8 Rt		8	10
19	5024010625-3	Smooth Washer Ø14,30 X Ø40 X 3,00mm		8	10
20	5368010893-1	Complete Lower Adjustment Bearing	2		
21	5136019648-1	Bearing Adjustment Plate	2		
22	5136019646-5	Plate Regulation From the Belt	2		
23	6020010395-8	Pressure Washer M12 Media	12		
24	6020310439-4	Hexagonal Head Bolt M12 X 1,75 X 35mm Cl8.8 Rt	12		
25	6020250584-0	Bearing Msf-50 De Ø2"	2		
26	6020350905-0	Bearing Y211-32V22	2		
27	6020130112-5	Grease Fitting 1/8"	2		
28	6020250585-9	Bearing T210 De Ø2"	2		
29	5296010052-2	Spindle Lower Bearing Adjustment	2		
30	6020311252-4	Heavy Elastic Pin Ø8 X 55mm	2		
31	6020350906-8	Bearing Y210-32V22	2		
32	6020130100-1	Grease Fitting 1/4" 28F Alt.14mm Hex. 5/16"	2		
33	6020310457-2	Hexagonal Nut M24 X 3,00 Ma Cl8 Ch.36mm H.19,00mm	4		
34	5080013225-5	Bronze Bushing Ø38.1 X Ø32 X 11.5mm	4		

* Itens 2 and 6 - See page 15

• Small Roller Of Conveyor 5502010140-6

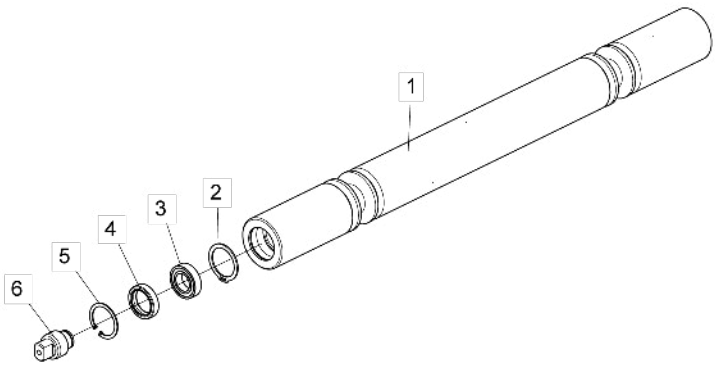

Item	Code	Product description	All
1	5502010134-1	Small Roller Of Conveyor	1
2	6020010013-4	Retaining Oring	2
3	6020350185-7	Bearing 6005 2Rs(1º Line)	2
4	6020350255-1	Retainer Ø35,00 X Ø47,00 X 10,00mm	2
5	6020011053-9	Retaining Ring I-047	2
6	5232012449-2	Shaft of Small Roller	2

• Small Roller Of Conveyor 5502010062-0

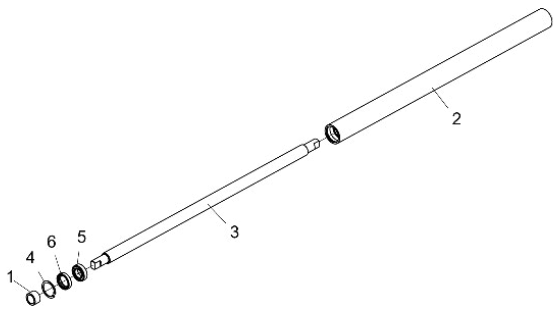

Item	Code	Product description	All
1	5024010662-8	Spacer Washer Of The Roller	2
2	5144010815-0	Protection Of Small Roller	1
3	5232011574-4	Small Roller Shaft	1
4	6020011053-9	Retaining Ring I-047	2
5	6020350185-7	Bearing 6005 2Rs(1º Line)	2
6	6020350255-1	Retainer Ø35,00 X Ø47,00 X 10,00mm	2

• Complete Hydraulic System (Var. Rate)

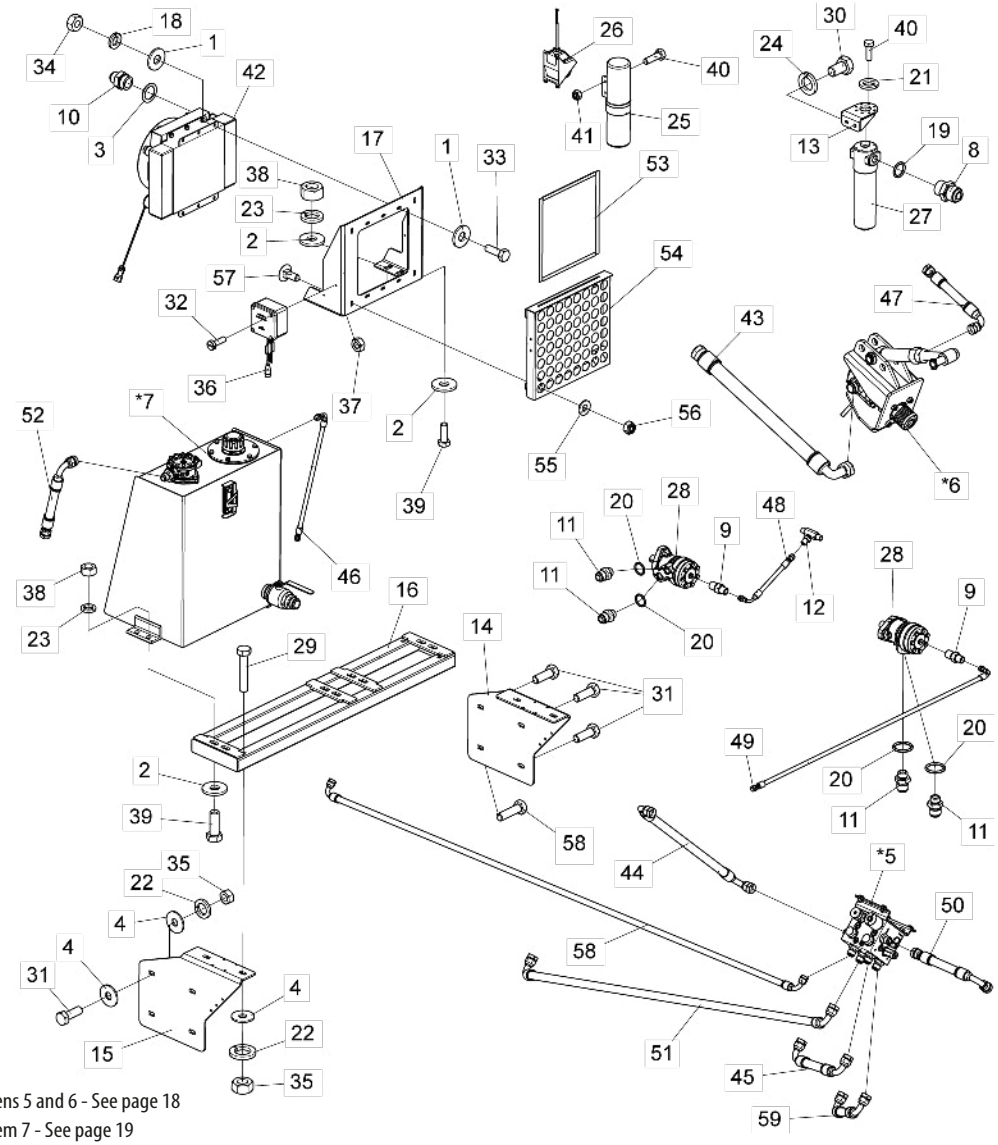

* Itens 5 and 6 - See page 18

* Item 7 - See page 19

Item	Code	Product description	All	9000	12000
1	5024010073-5	Smooth Washer Ø8,5 X Ø20 X 2,00mm	12		
2	5024010298-3	Smooth Washer Ø17 X Ø44 X 4,75mm	12		
3	5024010608-3	Washer Ø33,4 X Ø47 X 2,00Mm	2		
4	5024010625-3	Smooth Washer Ø14,30 X Ø40 X 3,00mm	20		
*5	5056010003-2	Complete Command Block	1		
*6	5064010088-2	Complete Hydraulic Pump Of Gear	1		
*7	5208012296-9	Complete Oil Hopper	1		
8	5412010135-0	Nipple R.1.1/16" Un X R.3/4" Bsp X 48mm Hexagonal 1.1/4"	2		
9	5412010290-0	Nipple R.1/4" Bsp X M12 X 1,5 X 35mm - Hexagonal 5/8"	2		
10	5412010165-2	Nipple R.1.1/16"Un X R.1"Bsp X 50mm - Hexagonal 1.1/2"	2		
11	5412010203-9	Nipple Ø1.1/16" Un X Ø7/8" Unf X 50mm Hexagonal 1.1/4"	4		
12	5412010229-2	Type Nipple "T" R.M12 X 1,5mm	1		
13	5530015032-1	Complete Pressure Filter Support	1		
14	5530018414-5	Fixation Right Support	1		
15	5530018415-3	Fixation Left Support	1		
16	5530016317-2	Hopper Support Of Oil/Radiator	1		
17	5530016319-9	Radiator Support	1		
18	6020010004-5	Pressure Washer M8 Media	7		
19	6020010030-4	O´Ring 2-212 N3006-90Nbr (21,82)	2		
20	6020010063-0	O´Ring 2-116 N3006-90Nbr (18,72)	4		
21	6020010122-0	Pressure Washer M6 Media	4		
22	6020010123-8	Pressure Washer M14 Media	12		
23	6020010124-6	Pressure Washer M16 Media	8		
24	6020010395-8	Pressure Washer M12 Media	2		
25	6020050642-4	Container For Instruction Manual	1		
26	6020055531-0	Main Cable Set (Fertiliza)	1		
27	6020110055-3	Pressure Filter Hda - Fp20010Fv06B-Lv6	1		
28	6020251739-3	Motor Omr-80-Cil A2-7/8-7/16(151-7241)	2		
29	6020310046-1	Hexagonal Head Bolt M14 X 2,00 X 75mm Cl8.8 Rt	4		
30	6020310071-2	Hexagonal Head Bolt M12 X 1,75 X 20mm Cl8.8 Rt	2		
31	6020310165-4	Hexagonal Head Bolt M14 X 2,00 X 40mm Cl8.8 Rt	7		
32	6020310271-5	Bolt Inox M3 X 0,50 X 10mm Ma Rt	4		
33	6020310448-3	Hexagonal Head Bolt M8 X 1,25 X 25mm Cl8.8 Rt	6		
34	6020310454-8	Hexagonal Nut M8 X 1,25 Ma Cl8 Ch.13mm H.6,50mm	6		
35	6020310455-6	Hexagonal Nut M14 X 2,00 Ma Cl8 Ch.22mm H.11,00mm	12		
36	6020310686-9	Switch Panel Of Heat Exchanger Bce	1		
37	6020310777-6	Inox Hexagonal Nut M3 X 0,50 Ma Ch.5,5mm Alt.2,40mm	4		
38	6020310818-7	Hexagonal Nut M16 X 2,00 Ma Cl8 Ch.24mm H.13,00mm	8		
39	6020311270-2	Hexagonal Head Bolt M16 X 2,00 X 45mm Cl8.8 Rt	8		
40	6020312403-4	Hexagonal Head Bolt M6 X 1,00 X 20mm Cl8.8 Rt	6		
41	6020317442-2	Self-Locking Nut With Nylon Low M6 X 1,00 Ma Cl8 Ch.10mm H.6,00mm	2		
42	6020395038-4	Heat Exchanger (Hs21205A00 Oesse)	1		
43	6020250619-7	High Pressure Hydraulic Hose 1.1/4" X 2500mm W/1Tcg and 1Trg	1		
44	6020251278-2	High Pressure Hydraulic Hose 3/4" X 3300mm W/2Tcg		1	
44	6020251165-4	High Pressure Hydraulic Hose 3/4" X 4100mm W/2Tcg			1
45	6020251298-7	High Pressure Hydraulic Hose 3/4" X 1800mm W/2Tcg		2	
45	6020251303-7	High Pressure Hydraulic Hose 3/4" X 2200mm W/2Tcg			2
46	6020251729-6	High Pressure Hydraulic Hose 1/4" X 5000mm W/1Tcg and 1Trg		1	
46	6020251730-0	High Pressure Hydraulic Hose 1/4" X 5500mm W/1Tcg and 1Trg			1

• Table Complete Hydraulic System (Var. Rate)

Item	Code	Product description	All	9000	12000
47	6020251341-0	High Pressure Hydraulic Hose 3/4" X 2600mm W/1Tcg and 1Trg	1		
48	6020251732-6	High Pressure Hydraulic Hose 1/4" X 170mm W/1Tcg and 1Trg	1		
49	6020251734-2	High Pressure Hydraulic Hose 1/4" X 1150mm W/1Tcg and 1Trg	1		
50	6020251296-0	High Pressure Hydraulic Hose 3/4" X 3000mm W/1Tcg(7/8" Unf) and 1Trg (1.1/16"Unf)		1	
50	6020251737-7	High Pressure Hydraulic Hose 3/4" X 3600mm W/1Tcg and 1Trg			1
51	6020251363-0	High Pressure Hydraulic Hose 3/4" X 2800mm W/2Tcg		2	
51	6020251738-5	High Pressure Hydraulic Hose 3/4" X 3200mm W/2Tcg			2
52	6020251337-1	High Pressure Hydraulic Hose 3/4" X 1800mm W/1Tcg and 1Trg	1		
53	5542010042-5	Gang Protection	1		
54	5530016653-8	Radiator Support	1		
55	6020010431-8	Plain Inox Washer Ø8,5 X Ø18 X 1,8mm	4		
56	6020310850-0	Self-Locking Inox Hexagonal Nut With Nylon Low M8 X 1,25 Ma Ch.13mm	4		
57	6020311192-7	French Head Bolt Inox M8 X 1,25 X 20mm Ma Rt (Without Nut)	4		
58	6020310168-9	Hexagonal Head Bolt M14 X 2,00 X 50mm Cl8.8 Rt	1		

• Complete Command Block

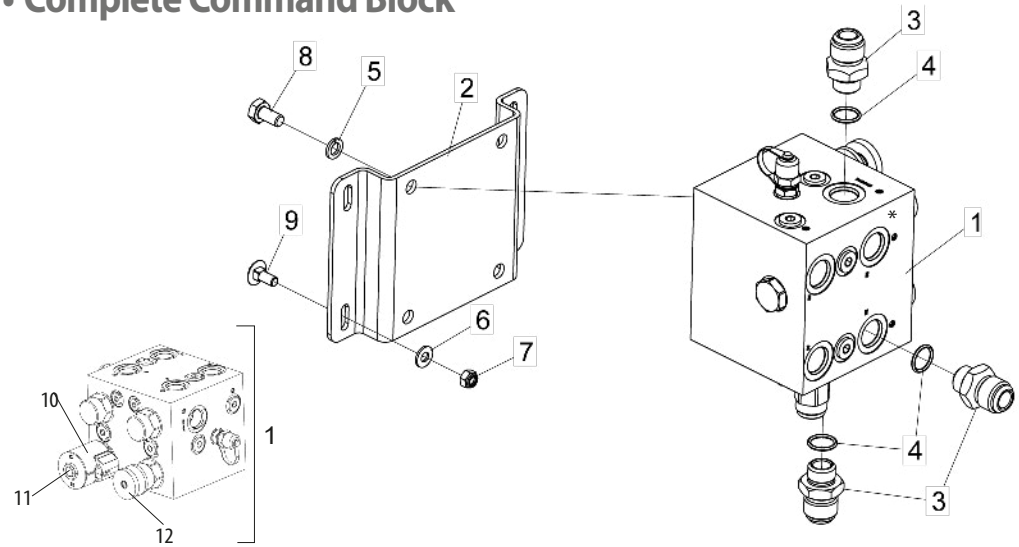

Item	Code	Product description	All
1	6020030737-5	Command Valve Fertiliza(Hfb-110831)	1
2	5136016450-4	Fixation Plate Of Command Block	1
3	5412010203-9	Nipple Ø1.1/16" Un X Ø7/8" Unf X 50mm Hexagonal 1.1/4"	6
4	6020010063-0	O´Ring 2-116 N3006-90Nbr (18,72)	6
5	6020010394-0	Pressure Washer M10 Media	3
6	6020010431-8	Plain Inox Washer Ø8,5 X Ø18 X 1,8mm	4
7	6020310850-0	Self-Locking Inox Hexagonal Nut With Nylon Low M8 X 1,25 Ma Ch.13mm	4
8	6020311013-0	Hexagonal Head Bolt M10 X 1,50 X 20mm Cl8.8 Rt	3
9	6020311192-7	French Head Bolt Inox M8 X 1,25 X 20mm Ma Rt (Without Nut)	4
10	6020370358-1	Solenoid for Control Block	1
11	6020059052-2	Cartridge for Block of Command	1
12	6020430307-2	Mechanical Flow Adjustment Valve	1

• Complete Hydraulic Pump Of Gear

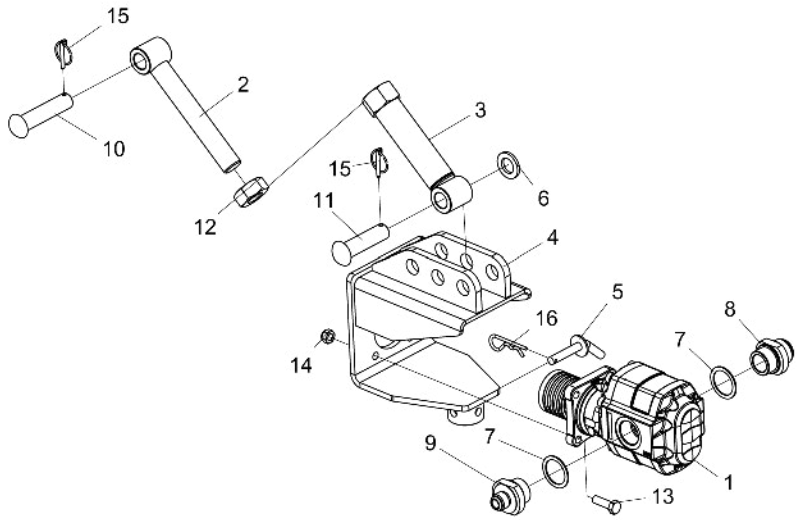

Item	Code	Product description	All
1	6020030694-8	Hydraulic Pump Of Gear - Casappa Fp 30.125 Of 125,66 Cm^3/Rot	1
2	5484010162-5	Support Regulator Of Pump	1
3	5484010163-3	Upper Regulator Of Pump Support	1
4	5530019436-1	Support Of Pump	1
5	5558010100-2	Lock Of Support W/Washer	1
6	5024010039-5	Smooth Washer Ø26,2 X Ø44 X 4,75mm	1
7	5024010607-5	Aluminium Washer Of Ø41,5 X Ø54 X 2,00mm	2
8	5412010224-1	Nipple R.1.5/8" - 12Fpp - Unf X 1.1/4" - 11Fpp - Bsp	1
9	5412010225-0	Nipple R.1.1/16" - 12Fpp - Un - 1A X 1.1/4" - 11Fpp - Bsp	1
10	6020310595-1	Pin Head French Ø1" X 105mm	1
11	6020310596-0	Pin Head French Ø1" X 90mm	1
12	5456010033-0	Hexagonal Nut Ø1.1/4" 7F Baixa	1
13	6020310152-2	Hexagonal Head Bolt M12 X 1,75 X 40mm Cl8.8 Rp	4
14	6020310847-0	Self-Locking Nut With Nylon M12 X 1 ,75 Ma Cl8 Ch.19mm H.12,00mm	4
15	6020390293-2	Lock Ø5,75 X 40mm	2
16	6020390308-4	Lock Nma - Type "R" Ø4,5 X 80mm	1

• Complete Oil Hopper

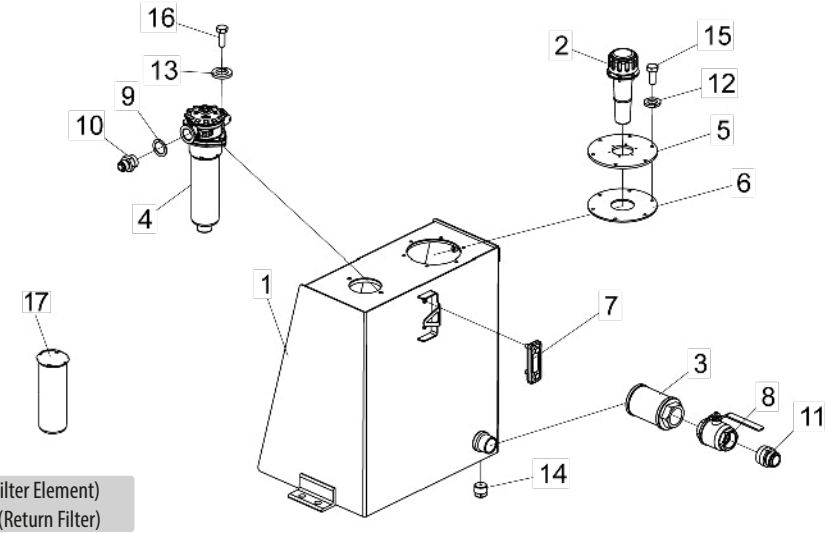

*Note: Item 17 (Filter Element) is used in Item 4 (Return Filter)

Item	Code	Product description	All
1	5208013074-0	Deposit of Oil Single	1
2	6020110059-6	Air Filter "Hda" Fa-76-40/2 - Stauff SMBb-80S040Stb	1
3	6020110109-6	Suction Filter Sus-P-088-N24F-140-125-0(Vazao 95 L/M) Rosca 1.1/2"Npt	1
4	6020110110-0	Return Filter - Assembled In Oil Tank Rfm Eco/N 185 Bd 10A 1,0(Hydac)	1
5	5284010109-6	Fixation Flange	1
6	5333010047-4	Fixation Joint	1
7	6020430211-4	Oil Level Display Without Thermometer "Hda" Vn76/41(T) - Stauff Sna076Bso10	1
8	6020430214-9	Sphere Valve R 1.1/2" Npt (Stauff 2Bvl-2024B)	1
9	5024010608-3	Washer Ø33,4 X Ø47 X 2,00mm	1
10	5412010165-2	Nipple R.1.1/16"Un X R.1"Bsp X 50mm - Hexagonal 1.1/2"	1
11	5412010226-8	Niple R.1.5/8" UNF - 12FPP	1
12	6020010004-5	Pressure Washer M8 Media	6
13	6020010394-0	Pressure Washer M10 Media	2
14	6020030130-0	Black Plug 1/2" Bsp	1
15	6020311269-9	Hexagonal Head Bolt M8 X 1,25 X 20mm Cl8.8 Rt	6
16	6020317475-9	Hexagonal Head Bolt M10 X 1,50 X 30mm Cl8.8 Rt	2
17	6020096010-9	Filter Element M-0185 R 010 mm 3261409Br (Hydac)	1

• Stair

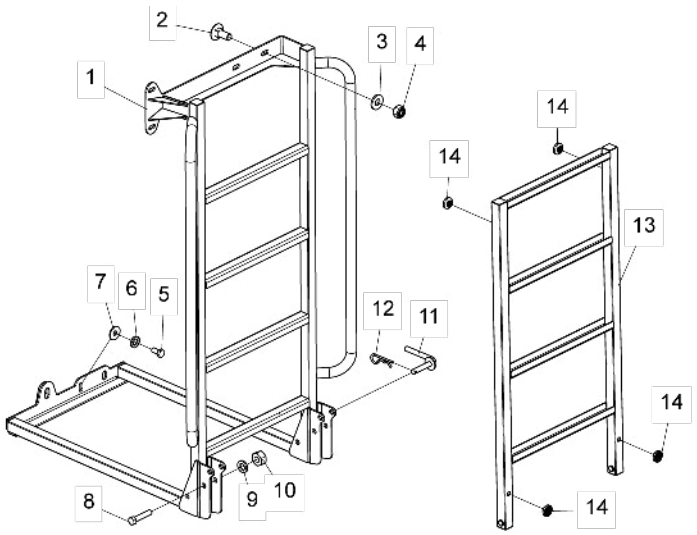

Item	Code	Product description	All
1	5259010112-5	Upper Ladder Fertiliza	1
2	6020311193-5	French Head Bolt Inox M12 X 1,75 X 30mm Ma Rt (Without Nut)	2
3	6020015801-9	Plain Inox Washer Ø12,5 X Ø27 X 3,00mm	2
4	6020310847-0	Self-Locking Nut With Nylon M12 X 1 ,75 Ma Cl8 Ch.19mm H.12,00mm	2
5	6020310070-4	Hexagonal Head Bolt M12 X 1,75 X 25mm Cl8.8 Rp	2
6	6020010395-8	Pressure Washer M12 Media	2
7	6020010442-3	Flat Washer M12 Ø13.00 X Ø37.00 X 3.00mm	2
8	6020311056-4	Hex Socket Cap Screw 1/2" X 2.1/2" 12F W Gr2 Rp	2
9	6020010410-5	1/2" Medium Industrial Pressure Washer	2
10	6020310754-7	Hex Nut 1/2" 12F W Gr5 Ch.7/8" Alt.12.00mm	2
11	5558010100-2	Lock Of Support W/Washer	1
12	6020390308-4	Lock Nma - Type "R" Ø4,5 X 80mm	1
13	5259010058-7	Lower Ladder Fertilizes	1
14	6020390341-6	Larger Cap	4

• Complete Grainy Disc

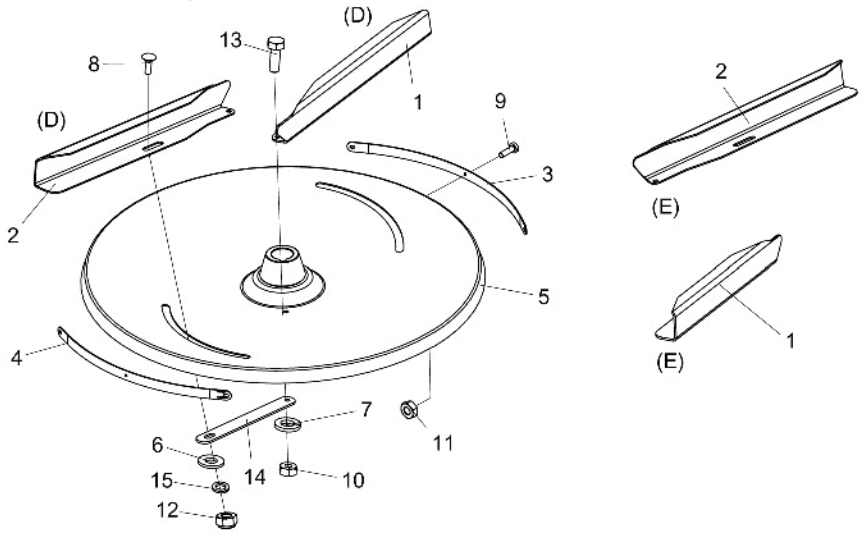

Item	Code	Product description	All	Rght	Left
1	5010010063-8	Right Disc Small Flip		1	
1	5010010065-4	Left Disc Small Flip			1
2	5010010064-6	Right Large Flip		1	
2	5010010066-2	Left Large Flip			1
3	5136015912-8	Scale Plate Right Lower Flap Disc		1	
3	5136015914-4	Scale Plate Left Small Flap Disc			1
4	5136015913-6	Scale Plate Right Flap Disc Greater		1	
4	5136015915-2	Scale Plate Left Large Flap Disc			1
5	5220010150-2	Disco Direito With Flange(Granulado)		1	
5	5220010151-0	Left Disc With Flange(Granulado)			1
6	6020010431-8	Plain Inox Washer Ø8,5 X Ø18 X 1,8mm	2		
7	6020010433-4	Inox Pressure Washer 1/4" Media Industry	2		
8	6020310069-0	French Head Bolt Inox M8 X 1,25 X 25mm Ma Rt (Without Nut)	2		
9	6020310271-5	Bolt Inox M3 X 0,50 X 10mm Ma Rt	6		
10	6020310733-4	Inox Hexagonal Nut 1/4" 20F Unc Ch.7/16" Height 5,50mm	2		
11	6020310777-6	Inox Hexagonal Nut M3 X 0,50 Ma Ch.5,5mm Alt.2,40mm	6		
12	6020310730-0	Brass Hexagonal Nut M8 X 1,25 Ma Ch.13mm H.6,50mm	2		
13	6020310890-0	Hexagonal Head Bolt Inox 1/4" X 3/4" 20F Unc2A Rt	2		
14	5136016248-0	Lower Plate Of Flip	2		
15	6020015922-8	Pressure Washer Inox M8 Mean	2		

• Complete Disc For Fertilizer Powder

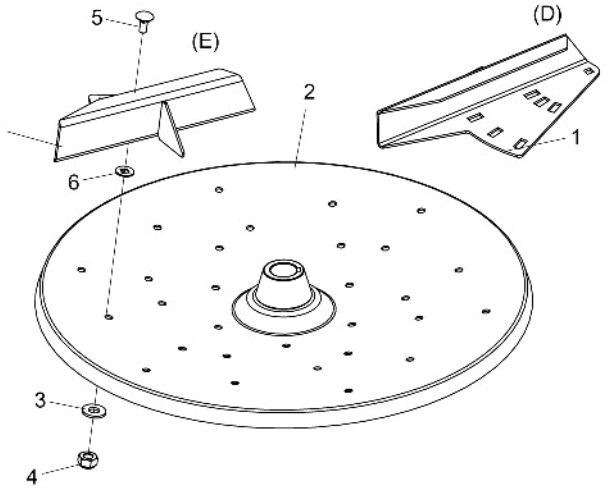

Item	Code	Product description	All	Right	Left
1	5010010067-0	Complete Fertilizer Power Flip (Right)		6	
1	5010010069-7	Complete Fertilizer Power Flip (Left)			6
2	5220010152-9	Disc For Fertilizer Powder (Right)		1	
2	5220010153-7	Disc For Fertilizer Powder (Left)			1
3	6020015922-8	Pressure Washer Inox M8 Mean	18		
4	6020310730-0	Brass Hexagonal Nut M8 X 1,25 Ma Ch.13mm H.6,50mm	18		
5	6020311192-7	French Head Bolt Inox M8 X 1,25 X 20mm Ma Rt (Without Nut)	18		
6	5024010707-1	Stainless Washer Ø22 X 8,5 X 3mm	18		

• Pipe For Ply

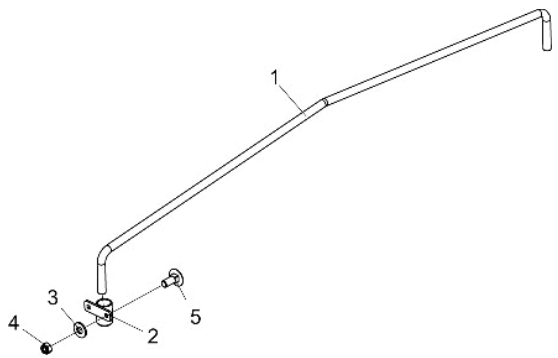

Item	Code	Product description	All
1	5108010934-6	Pipe Of Ø21,6 X Ø26,9 X 2145mm	1
2	5530015424-6	Complete Support	2
3	6020010431-8	Plain Inox Washer Ø8,5 X Ø18 X 1,8mm	4
4	6020310850-0	Self-Locking Inox Hexagonal Nut With Nylon Low M8 X 1,25 Ma Ch.13mm	4
5	6020311192-7	French Head Bolt Inox M8 X 1,25 X 20mm Ma Rt (Without Nut)	4

• Complete Screen

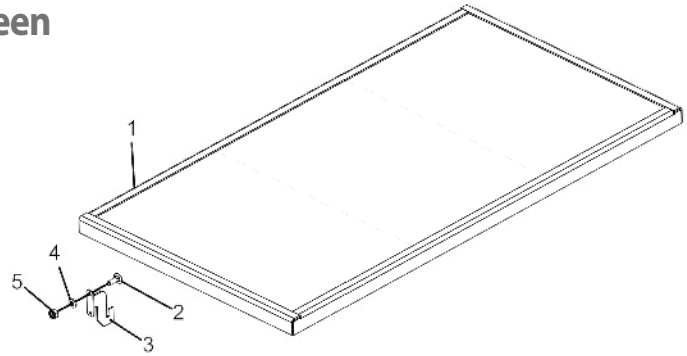

Item	Code	Product description	All
1	5530015107-7	Screen Lateral Support	1
2	6020310069-0	French Head Bolt Inox M8 X 1,25 X 25mm Ma Rt (Without Nut)	8
3	5530019541-4	Full Display Support	4
4	6020015799-3	Plain Inox Washer Ø8,5 X Ø18 X 3,00mm	8
5	6020310850-0	Self-Locking Inox Hexagonal Nut With Nylon Low M8 X 1,25 Ma Ch.13mm	8

• Radiator Protection With Cover

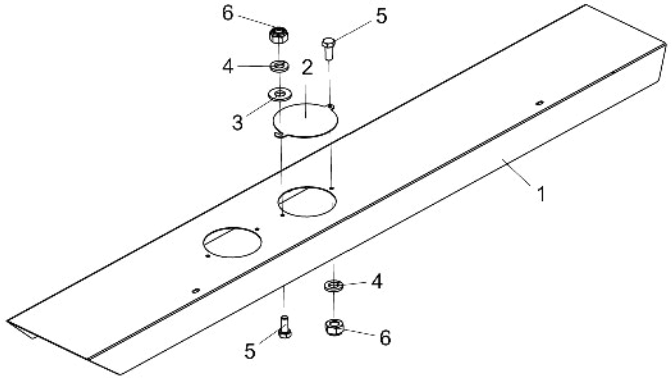

Item	Code	Product description	All
1	5464010356-9	Radiator Protection	1
2	5538010551-8	Mobile Cover Of Radiator	2
3	6020010431-8	Plain Inox Washer Ø8,5 X Ø18 X 1,8mm	2
4	6020010434-2	Pressure Washer Inox 5/16" Media	4
5	6020310170-0	Hexagonal Head Bolt Inox M8 X 1,25 X 20mm Cl 8.8 Rt	4
6	6020310850-0	Self-Locking Inox Hexagonal Nut With Nylon Low M8 X 1,25 Ma Ch.13mm	4

• Complete Fixation Support Of Discs

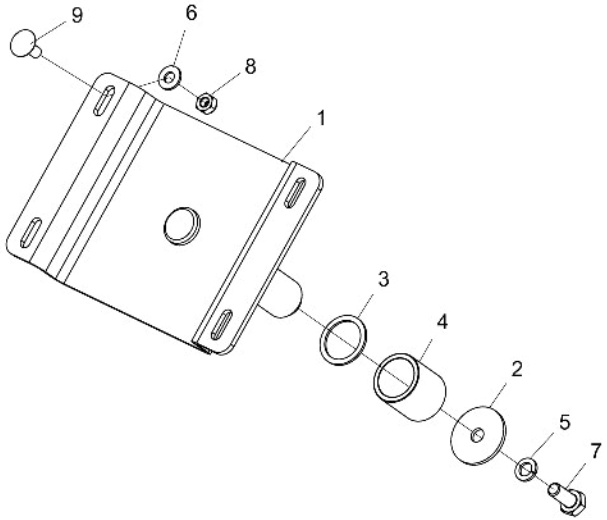

Item	Code	Product description	All
1	5530016316-4	Fixation Support Of Discs	1
2	5024010206-1	Smooth Washer Ø10,6 X Ø44 X 3,00mm	1
3	5024010350-5	Smooth Washer Ø38 X Ø30 X 2,00mm	1
4	5080011628-4	Back Bushing Of Rotating Discs	1
5	6020010394-0	Pressure Washer M10 Media	1
6	6020010431-8	Plain Inox Washer Ø8,5 X Ø18 X 1,8mm	4
7	6020310452-1	Hexagonal Head Bolt M10 X 1,50 X 25mm Cl8.8 Rt	1
8	6020310850-0	Self-Locking Inox Hexagonal Nut With Nylon Low M8 X 1,25 Ma Ch.13mm	4
9	6020311192-7	French Head Bolt Inox M8 X 1,25 X 20mm Ma Rt (Without Nut)	4

• Fertilizer Rightection Support

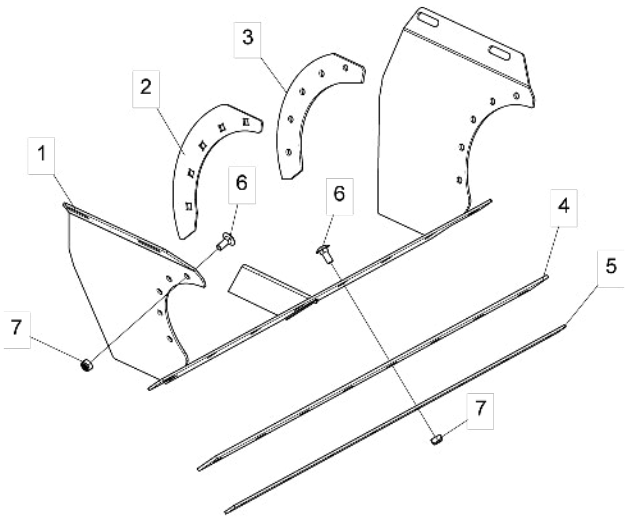

Item	Code	Product description	All
1	5530019580-5	Guiding Support	1
2	5136023412-0	Rubber Fixing Plate	2
3	6020317935-1	Rear Roller Side Rubber Protection	2
4	6020310635-4	Scrapper Rubber Protection Of Rear Roll	1
5	5136015923-3	Fixation Internal Plate Of Rubber	1
6	6020310172-7	French Head Bolt Inox M10 X 1,50 X 25mm Ma Rt	18
7	6020310815-2	Self-Locking Inox Hexagonal Nut With Nylon Low M10 X 1,50 Ma Ch.17mm	18

• Central Rightection Support

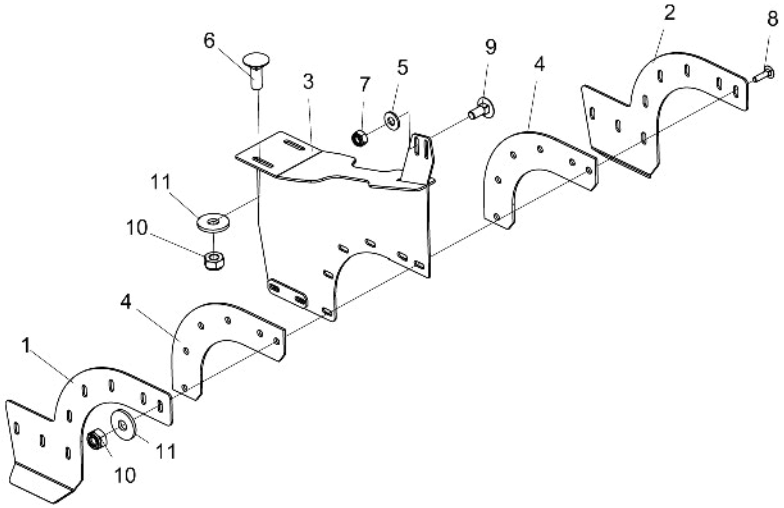

Item	Code	Product description	All
1	5136015924-1	Support Right Plate Of Rubber Of Deflector	1
2	5136015925-0	Support Plate Of Rubber Of Central Direction	1
3	5530016035-1	Central Guiding Support	1
4	6020310634-6	Rubber Protection Of Central Driver	2
5	6020010431-8	Plain Inox Washer Ø8,5 X Ø18 X 1,8mm	2
6	6020310061-5	French Head Bolt Inox M10 X 1,50 X 30mm Ma Rt	2
7	6020310850-0	Self-Locking Inox Hexagonal Nut With Nylon Low M8 X 1,25 Ma Ch.13mm	2
8	6020312094-2	French Head Bolt Inox M10 X 1,50 X 40mm Ma Rt	8
9	6020317452-0	French Head Bolt M8 X 1,25 X 20mm Cl8.8 Rt	2
10	6020310815-2	Self-Locking Inox Hexagonal Nut With Nylon Low M10 X 1,50 Ma Ch.17mm	10
11	6020015800-0	Plain Inox Washer Ø10,5 X Ø30 X 3,00mm	10

• Conductor Support

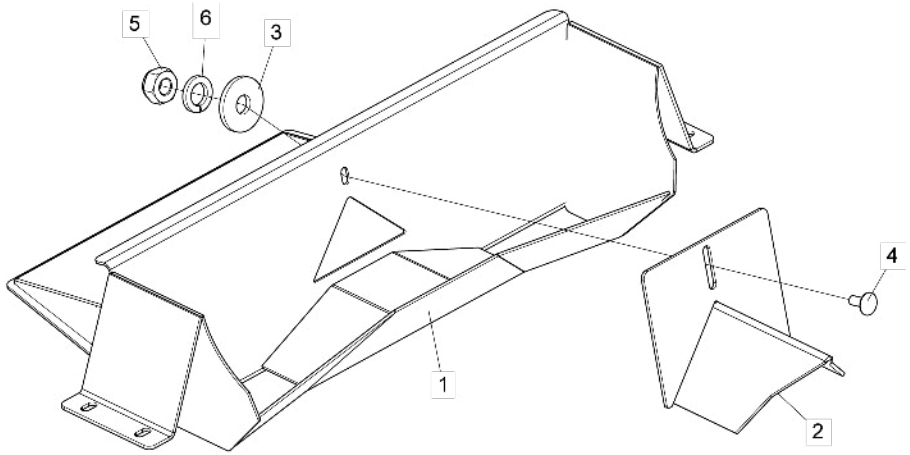

Item	Code	Product description	All
1	5150010135-4	Fertilizer Conductor	1
2	5530016237-0	Conductor Back Support	1
3	6020015800-0	Plain Inox Washer Ø10,5 X Ø30 X 3,00mm	1
4	6020310172-7	French Head Bolt Inox M10 X 1,50 X 25mm Ma Rt	1
5	6020015921-0	Brass Hex Nut M10 x 1.5 MA CL8 Ch.17mm H.8mm	1
6	6020310355-0	Spring Washer Stainless Steel M10 Medium	1

• Finish Cover W/ Inox Fixation Support

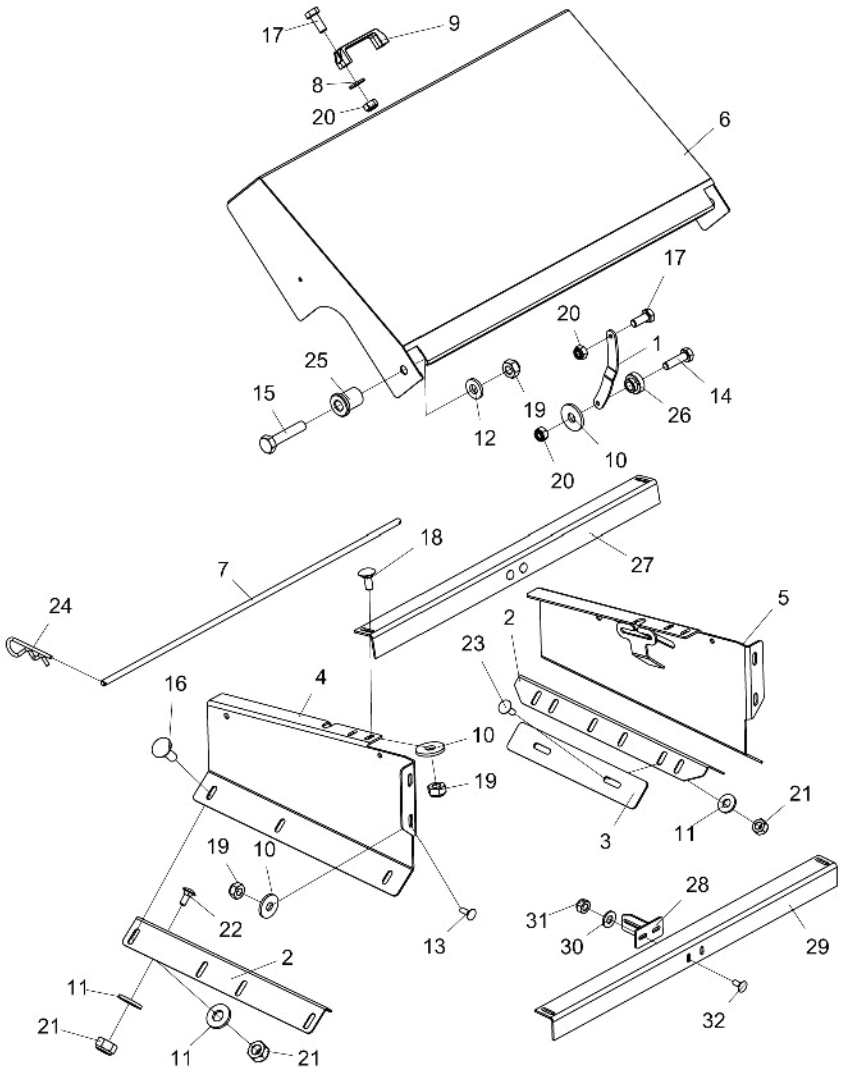

Item	Code	Product description	All
1	5136015050-3	Left Back Plate Of Rear Cover	1
2	5136023409-0	Driver Support Support Plate	2
3	5136016279-0	Rubber Back Plate	2
4	5530019544-9	Right Cover Support	1
5	5530019542-2	Left Cover Support	1
6	5538014892-6	Finish Cover (Inox)	1
7	5566010314-6	Chain Support Rod	1
8	6020010431-8	Plain Inox Washer Ø8,5 X Ø18 X 1,8mm	2
9	6020010922-0	Nylon Belt Pmc 594 - 132 X 32 mm	1
10	6020015800-0	Plain Inox Washer Ø10,5 X Ø30 X 3,00mm	7
11	6020015801-9	Plain Inox Washer Ø12,5 X Ø27 X 3,00mm	12
12	6020015802-7	Plain Inox Washer Ø10,5 X Ø22 X 3,00mm	2
13	6020310061-5	French Head Bolt Inox M10 X 1,50 X 30mm Ma Rt	4
14	6020310066-6	Hexagonal Head Bolt Inox M8 X 1,25 X 30mm Ma Rt	1
15	6020310072-0	Hexagonal Head Bolt Inox M10 X 1,50 X 50mm Ma Rt	2
16	6020310140-9	French Head Bolt M12 X 1,75 X 35mm Cl8.8 Rp	6
17	6020310170-0	Hexagonal Head Bolt Inox M8 X 1,25 X 20mm Cl 8.8 Rt	3
18	6020310172-7	French Head Bolt Inox M10 X 1,50 X 25mm Ma Rt	2
19	6020310815-2	Self-Locking Inox Hexagonal Nut With Nylon Low M10 X 1,50 Ma Ch.17mm	8
20	6020310850-0	Self-Locking Inox Hexagonal Nut With Nylon Low M8 X 1,25 Ma Ch.13mm	4
21	6020310851-9	Self-Locking Inox Hexagonal Nut With Nylon Low M12 X 1,75 Ma Ch.19mm	12
22	6020311193-5	French Head Bolt Inox M12 X 1,75 X 30mm Ma Rt (Without Nut)	2
23	6020311198-6	French Head Bolt Inox M12 X 1,75 X 35mm Ma Rt (Without Nut)	4
24	6020390294-0	Lock Nma - Type "R" Ø3,5 X 67mm(Special)	2
25	5080011240-8	Articulation Bushing Of Cover	2
26	5080011392-7	Stabilizer Bushing	1
27	5572016612-6	Beam "L" Upper Of Direction	1
28	5530016163-3	Support Of Divider Plate	1
29	5572016613-4	Fixation Beam Type "L"	1
30	6020010431-8	Plain Inox Washer Ø8,5 X Ø18 X 1,8mm	2
31	6020310850-0	Self-Locking Inox Hexagonal Nut With Nylon Low M8 X 1,25 Ma Ch.13mm	2
32	6020311192-7	French Head Bolt Inox M8 X 1,25 X 20mm Ma Rt (Without Nut)	2

• Complete Transmission System

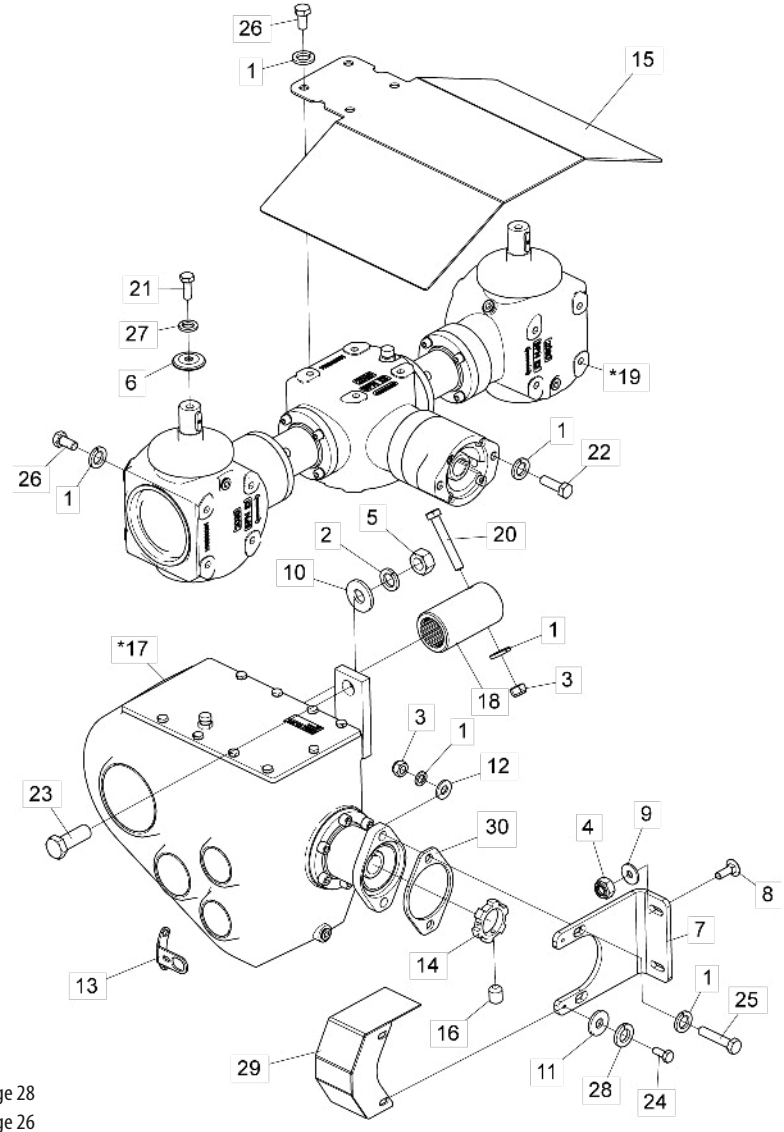

Item	Code	Product description	All
1	6020010395-8	Pressure Washer M12 Media	23
2	6020010403-2	Pressure Washer M20 Media	1
3	6020310847-0	Self-Locking Nut With Nylon M12 X 1 ,75 Ma Cl8 Ch.19mm H.12,00mm	3
4	6020310815-2	Self-Locking Inox Hexagonal Nut With Nylon Low M10 X 1,50 Ma Ch.17mm	2
5	6020311265-6	Hexagonal Nut M20 X 2,50 Ma Cl8 Ch.30mm H.16,00mm	1
6	5284010158-4	Clamp Flange Of Fertilizer Disc	2
7	5136015910-1	Fixation Auxiliar Plate of Reductor Box	1
8	6020310061-5	French Head Bolt Inox M10 X 1,50 X 30mm Ma Rt	2
9	6020015800-0	Plain Inox Washer Ø10,5 X Ø30 X 3,00mm	2
10	5024010007-7	Smooth Washer Ø20,3 X Ø46,5 X 4,75mm	1
11	5024010161-8	Smooth Washer Ø7 X Ø18 X 2,00mm	2
12	6020015801-9	Plain Inox Washer Ø12,5 X Ø27 X 3,00mm	2
13	5530016320-2	Support Of Reduction Box Sensor	1
14	5284010159-2	Flange Of Inductive Sensor Of Reduction Box	1
15	5464010436-0	Protection Of Hydraulic Engine	1
16	6020317506-2	Allen Bolt S/C M6 X 1,00 X 8,00mm Cl12.9 Rt	3
*17	6020056002-0	Reduction Box	1
18	6020230127-7	Splined Sleeve For Input Shaft Of Reductor	1
*19	6020056003-8	Triple Box 2030 With Actuation For Hydraulic Motor	1
20	6020317552-6	Hexagonal Head Bolt M12 X 1,75 X 80mm Cl8.8 Rt	1
21	6020310171-9	Hexagonal Head Bolt Inox M10 X 1,50 X 30mm Ma Rt	2
22	6020310152-2	Hexagonal Head Bolt M12 X 1,75 X 40mm Cl8.8 Rp	2
23	6020310992-2	Hexagonal Head Bolt M20 X 2,50 X 55mm Cl8.8 Rp	1
24	6020310291-0	Hexagonal Head Bolt M6 X 1,00 X 15mm Cl8.8 Rt	2
25	6020310210-3	Hexagonal Head Bolt M12 X 1,75 X 60mm Cl8.8 Rt	2
26	6020310070-4	Hexagonal Head Bolt M12 X 1,75 X 25mm Cl8.8 Rp	16
27	6020010394-0	Pressure Washer M10 Media	2
28	6020010122-0	Pressure Washer M6 Media	2
29	5464010528-6	Complete Sensor Protection	1
30	5530019477-9	Motor Flange Support	1

* Item 17 - See page 28
* Item 19 - See page 26

- **Complete Triple Box**

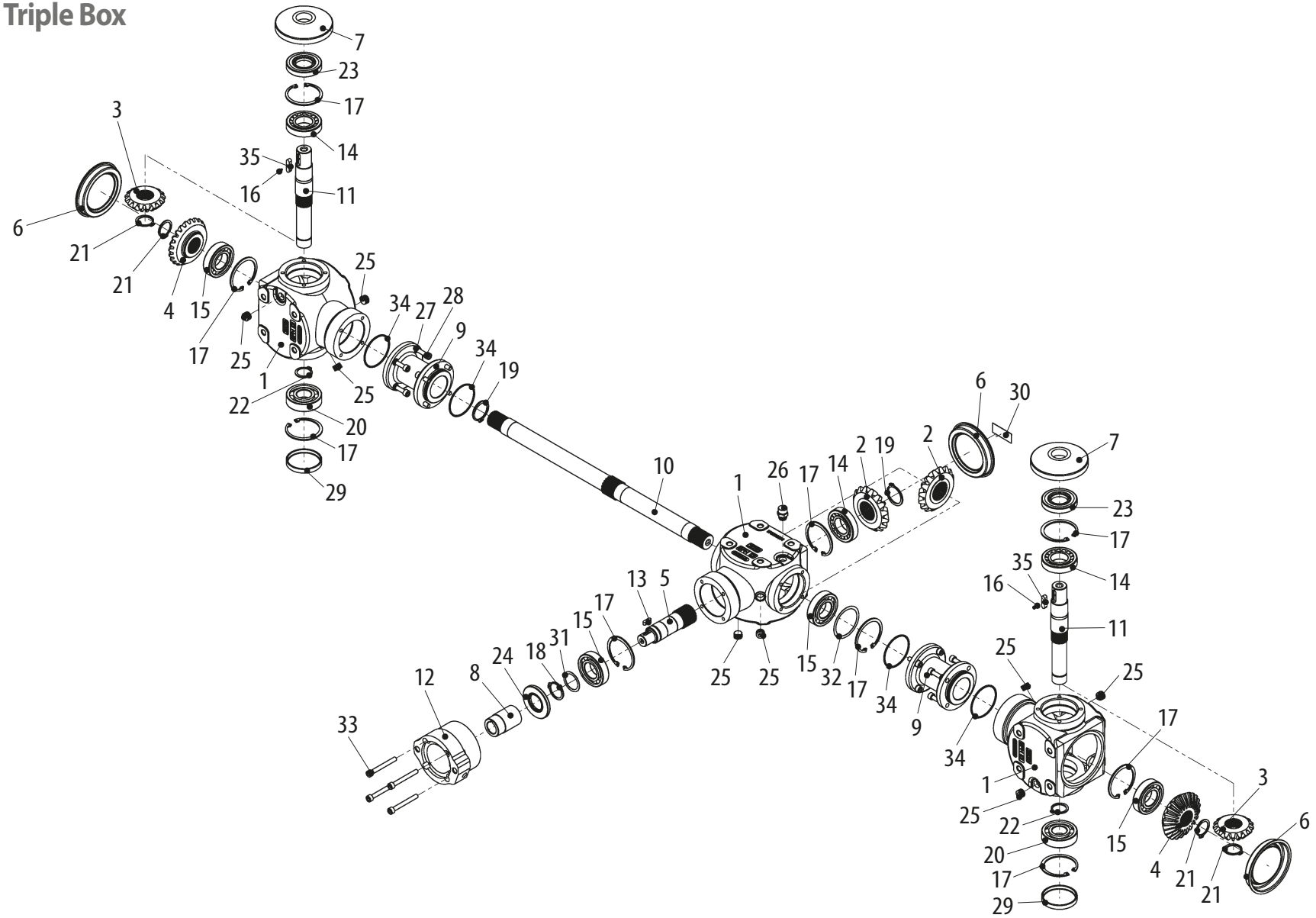

• Table Complete Triple Box

Item	Code	Product description	All
1	6020060198-2	Machined Housing 2030 (Bpn 290230022)	3
2	6020060199-0	Conical Crown Z=16 (Bpn 291164009)	2
3	6020317950-5	Conical Pinion Z=17 (Bpn 291006)	2
4	6020060200-8	Crown Z=23 (Bpn291005)	2
5	6020096012-5	Axle "Z" Cx.2030 - Smooth with Key (Bpn 295146)	1
6	6020395477-0	Closing Cap (Bpn 298611000)	3
7	6020079056-4	Dust Deflector (Bpn 298043)	2
8	6020031081-3	Bushing Keyed (Bpn 298124)	1
9	6020395478-9	Extender Tube (Bpn 580001)	2
10	6020096013-3	Splined Central Shaft (Bpn 295006)	1
11	6020096014-1	Output Shaft (Bpn 295007)	2
12	6020252351-2	Bearing 2 Cx 2030 (Bpn 290045)	1
13	6020060201-6	Key 1/4" X 1/4" X 20 - Temp. (Bpn 370017)	1
14	6020351118-6	Bearing Conical 30207 (Bpn 354005)	3
15	6020351119-4	Bearing Of Balls 6207 (Bpn 354004)	4
16	6020317953-0	Allen Screw M3 X 0.5 X 8 (Bpn 303022)	2
17	6020016310-1	Elastic Ring for Hole 1.72 X 2.5 (Bpn 33800072)	9
18	6020016311-0	Ring Elastic for Axle E.35 X 2.5 (Bpn 337001035)	1
19	6020016243-1	Elastic Ring for Shaft E.40 X 2.5 (Bpn 339001040)	2
20	6020351120-8	Bearing Spheres 6306 (Bpn 354001)	2
21	6020016312-8	Elastic Ring for Shaft E.32 X 2.00 (Bpn 337003)	4
22	6020016242-3	Elastic Ring for Shaft E.32 X 2.00 (Bpn 339000030)	2
23	6020351121-6	Retainer Brg 35 X 72 X 10 (Bpn 355016035)	2
24	6020351122-4	Retainer Brg 35 X 72 X 10 (Bpn 355030)	1
25	6020030755-3	3/8" Conical Gas Plug (Bpn 373010000)	9
26	6020351123-2	Breather 3/8" Bspt Conical Gas (Bpn 373007000)	1
27	6020016313-6	Toothed Washer S8 (Bpn 336008001)	16
28	6020317951-3	Allen Head Screw M8 X 25 (Bpn 303002400)	16
29	6020395479-7	Vulcanized Lid Ø72 X 10 (Bpn 372003000)	2
30	6020317849-5	Plate of Identification (500001)	1
31	6020210464-1	Spacer Shim Kit Ø35 (Bpn 340E03500)	1
32	6020210465-0	Spacer Shim Kit Ø72 (Bpn 340I07200)	1
33	6020317952-1	Allen Screw with Head M8 X 80 (Bpn 303025)	4
34	6020016314-4	O'ring ring Ø66.35 X Ø2.62 (Bpn 358026000)	4
35	6020060202-4	Key With Hole (Bpn 370005)	2

- **Complete Reduction Box**

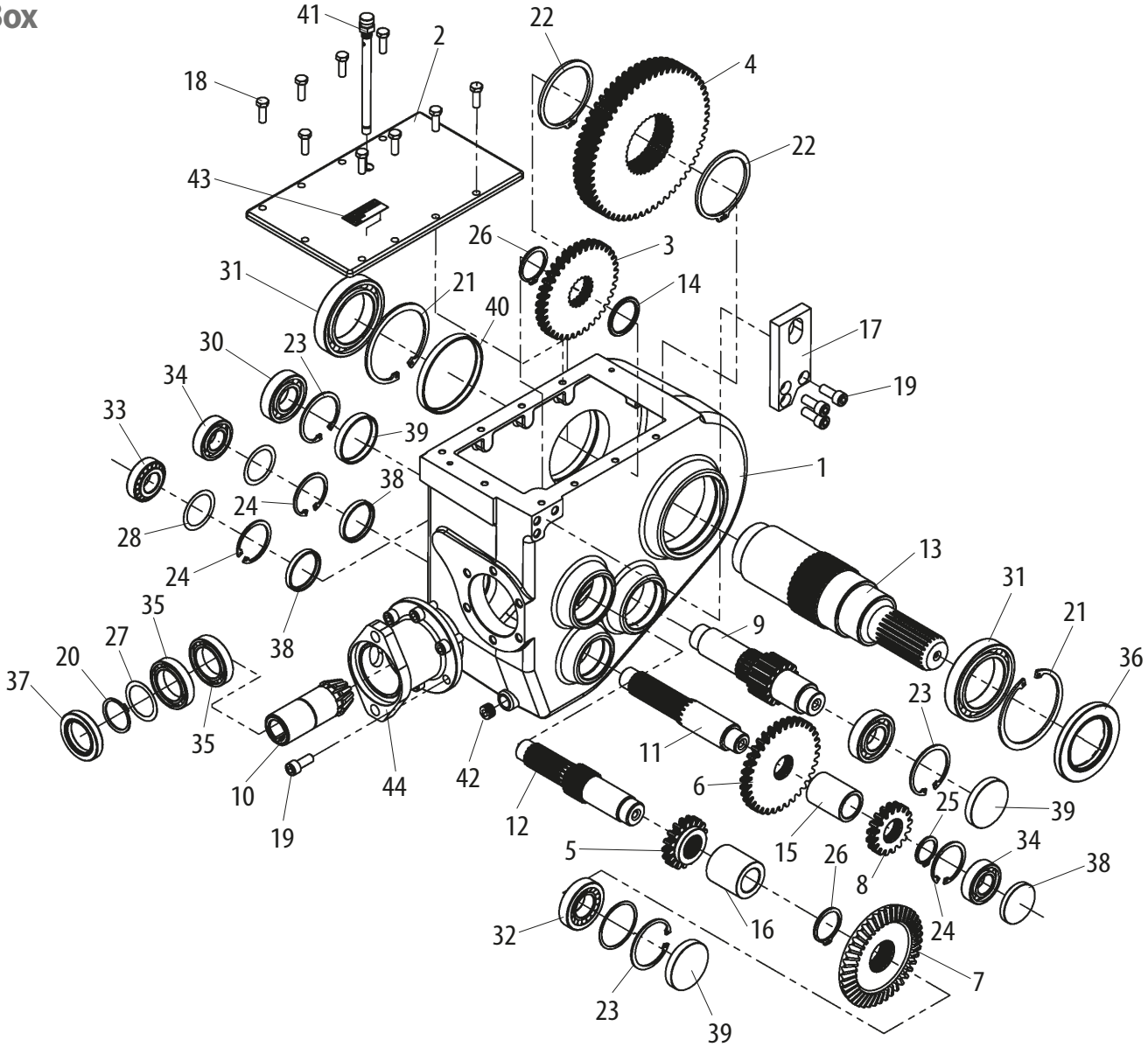

• Table Complete Reduction Box

Item	Code	Product description	All
1	6020059991-0	Machined Housing (Bpn 290033)	1
2	6020395401-0	Machined Cover (Bpn 290034)	1
3	6020095962-3	Cylindrical Gear - Z=37 (Bpn 291009)	1
4	6020095963-1	Cylindrical Gear - Z=59 (Bpn 291010)	1
5	6020095964-0	Cylindrical Gear Z=17 Reduction Box (Bpn 291061)	1
6	6020095965-8	Cylindrical Gear Z=35 (Without/Chamfer) (Bpn 291062)	1
7	6020059992-9	Conical Crown Z=42 (Bpn 291069)	1
8	6020095966-6	Cylindrical Gear Z=17 (Bpn 292009)	1
9	6020317851-7	Cylindrical Pinion (Bpn 292010)	1
10	6020317846-0	Conical Input Pinion Z=12 (Bpn 292031)	1
11	6020095957-4	Shaft 2nd Reduction (Bpn 295008)	1
12	6020095968-2	Shaft 1st Reduction (Bpn 295010)	1
13	6020095969-0	Shaft Output Z=36 (Bpn 295109)	1
14	6020031032-5	Bushing 40 X 50 X 3,5 (Bpn 298032)	1
15	6020031033-3	Bushing 40 X 30 X length 55mm (Bpn 298108)	1
16	6020031034-1	Bushing Spacer Ø30 X Ø48.3 X Comp. 51mm (Bpn 298122)	1
17	6020370422-7	Gearbox Fixing Bracket (Bpn 298152)	1
18	6020317847-9	Hex Head Screw M8 X 25 (Bpn 303005)	9
19	6020317848-7	Screw W/Allen Head M10 X 25 (Bpn 303006)	9
20	6020016238-5	Elastic Ring For Axis E. 40 X 1.75 (Bpn 337000040)	1
21	6020016239-3	Elastic Ring for Hole I.100 X 3.0 (Bpn 337007)	2
22	6020016193-1	Elastic Ring for Shaft E.80 X 3.60 (Bpn 337009)	2
23	6020016240-7	Elastic Ring I.62 X 2.0 (Bpn 338000062)	3
24	6020016241-5	Elastic Ring for Hole I.52 X 2 (Bpn 338043000)	3
25	6020016242-3	Elastic Ring for Shaft E.32 X 2.00 (Bpn 339000030)	1
26	6020016243-1	Elastic Ring for Shaft E.40 X 2.5 (Bpn 339001040)	2
27	6020210431-5	Spacer Shim Kit Ø40 (Bpn 340E04000)	1
28	6020060203-2	Spacer Shim I.052 (Bpn 340I05200)	1
29	6020060204-0	Spacer Shim I.062 (Bpn 340I06200)	1
30	6020350020-6	Ball Bearing 6206 (Bpn 354007)	2
31	6020351065-1	Ball Bearing 6013 (Bpn 354008)	2
32	6020350060-5	Bearing 30206	1
33	6020351082-1	Bearing Conical 30205 (Bpn 354010)	1
34	6020351080-5	Bearing Of Balls 6205 (Bpn 354011)	2
35	6020351066-0	Bearing Of Balls 6908 (Bpn 354051)	2
36	6020351064-3	Retainer Brg Ø65 X Ø100 X 10 (Bpn 355003)	1
37	6020351063-5	Retainer Ø40 X Ø62 X 10 (Bpn 355031)	1
38	6020395342-1	Cover Vulcanized Ø52 X 7 (Bpn 372001000)	3
39	6020395343-0	Cover Vulcanized Ø62 X 10 (Bpn 372004000)	3
40	6020395344-8	Cover Vulcanized Ø100 X 10 (Bpn 372008)	1
41	6020031031-7	Plug 3/8" Bspt With Level Stick (Bpn 373004)	1
42	6020030755-3	3/8" Conical Gas Plug (Bpn 373010000)	1
43	6020317849-5	Plate of Identification (500001)	1
44	6020317850-9	Prolonger (Bpn 580047)	1

• Assembled ISOBUS Box Agrosystem

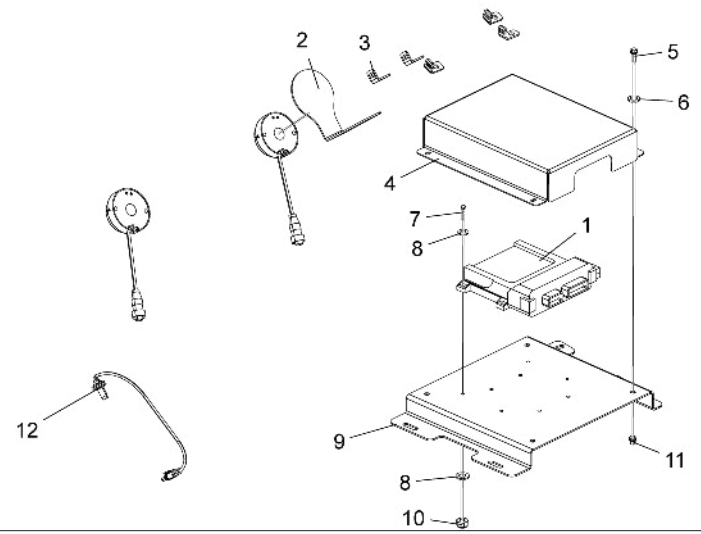

Item	Code	Product description	All
1	6020060608-9	ISO6 3-Channel ISOBUS Fertilizer Distribution Control Assembly	1
2	5136025555-0	Fertilizer Antenna Mounting Plate	1
3	5136025554-2	Fertilizer Wiring Harness Fixing Plate	5
4	5538016014-4	DCF and Fertilizer Module Cover	1
5	6020318003-1	Hex Flange Bolt M6 x 1.00 x 20 mm Class 8.8 Standard 6921	4
6	6020010122-0	M6 Medium Spring Washer	4
7	6020317386-8	Hex Head Bolt M5 x 0.80 x 25 mm Class 8.8 Full Thread	4
8	6020010449-0	Flat Washer M5 Ø5.30 x Ø10.00 x 1.00 mm	8
9	5136025378-7	Fertilizer Module Housing Plate	1
10	6020310757-1	Low Profile Hex Self-Locking Nut with Nylon Insert M5 x 0.8 Class 8 Wrench 8 mm Height 5.00 mm	4
11	6020351057-0	Steel Hex Rivet Nut with Internal Thread M6 x 1 x 15 mm Flat Head	4
12	6020370347-6	Inductive Proximity Sensor M12 NO 6–36 VDC NPN 3-Wire	1

• IsoView Fertilizer Control Assembly – Agres

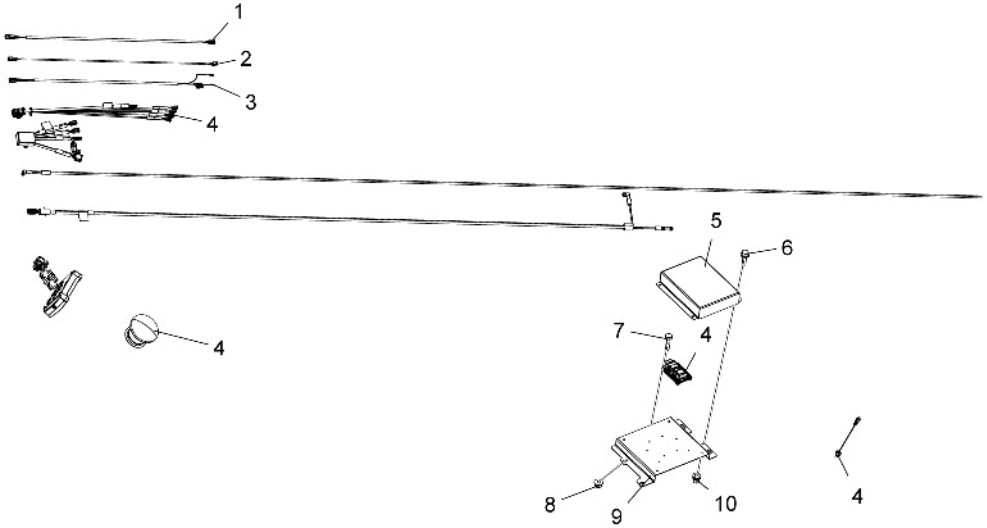

Item	Code	Product description	All
1	6020059975-9	Isoview CAN Extension Cable for Fertilizer	1
2	6020059974-0	Isoview Conveyor Control Cable for Fertilizer	1
3	6020059973-2	Variable Rate TX Pilot Fuse Holder Cable 6-Way with Extension	1
4	6020210427-7	Isoview Fertilizer Control Monitor Kit – Agres	1
5	5136025543-7	DCF and Fertilizer Module Cover Plate	1
6	6020318003-1	Hex Flange Bolt M6 x 1.00 x 20 mm Class 8.8 Standard 6921	4
7	6020310027-5	Hex Head Bolt M6 x 1.00 x 25 mm Class 8.8 Full Thread	4
8	6020317856-8	Hex Flange Nut with Nylon Insert M6 x 1.00 Class 8	4
9	5136025378-7	Fertilizer Module Housing Plate	1
10	6020351057-0	Steel Hex Rivet Nut with Internal Thread M6 x 1 x 15 mm Flat Head	4

• Agrosystem ISOBUS Fertilizer Distributor Control Assembly

Item	Code	Product description	All
1	6020252530-2	ISO6 3-Channel Fertilizer Distribution Module (ME2003000000015)	1
2	6020060609-7	ISO6/WSMT2 Fertilizer Distribution Wiring Harness (PA0902000000341)	1
3	6020060610-0	ISOBUS Connection Wiring Harness 6 m for Fertilizer Distribution (PA0902000000392)	1
4	6020060611-9	ISO6 1-Channel Fertilizer Distribution Wiring Harness 3 m (PA0902000000846)	1
5	6020370340-9	Agrosystem SVA 60 Speed Sensor (020012419)	1
6	6020060608-9	ISO6 3-Channel ISOBUS Fertilizer Distributor Control Assembly	1

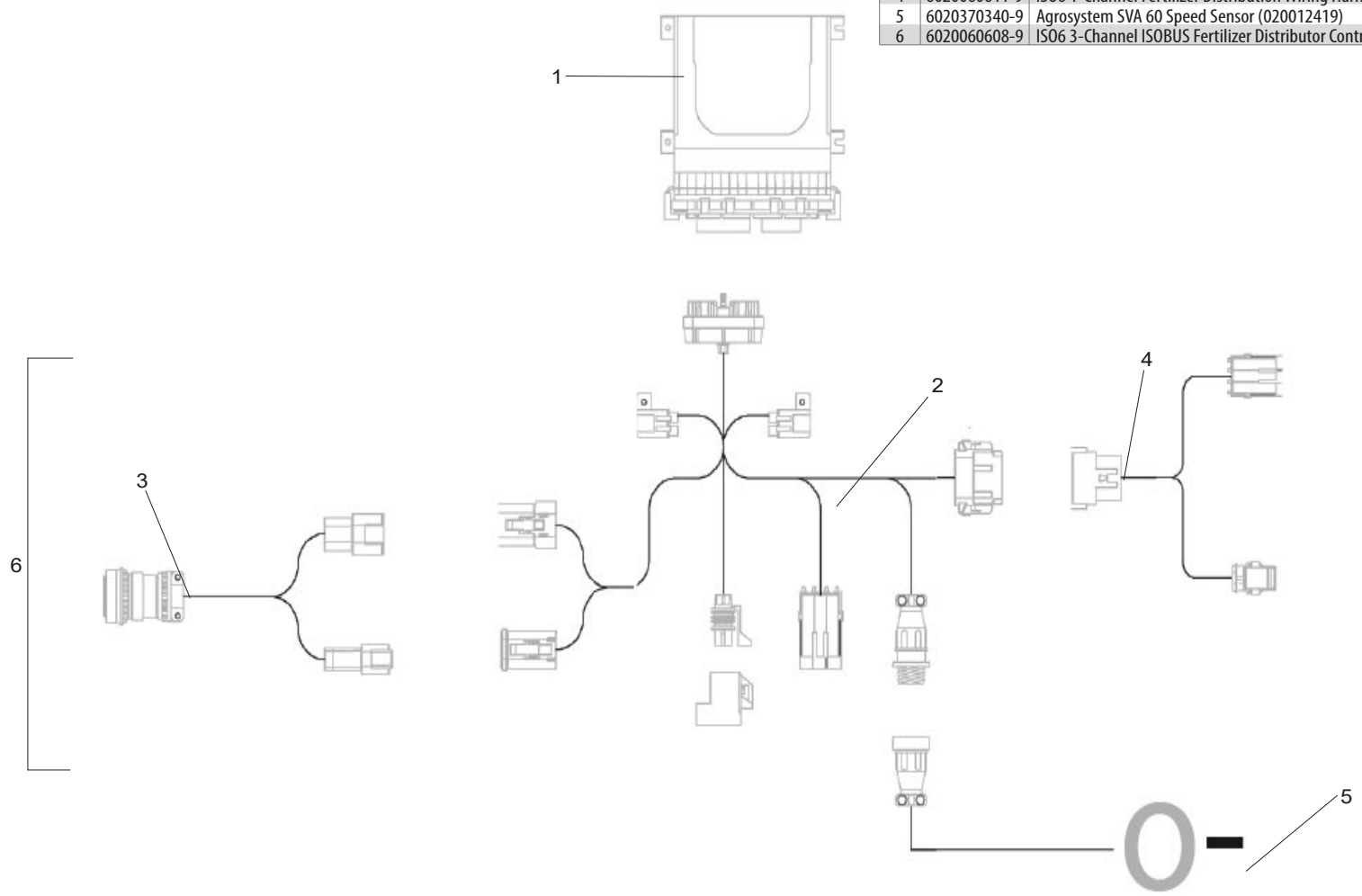

• Electronic System AgroSystem Fix Rate

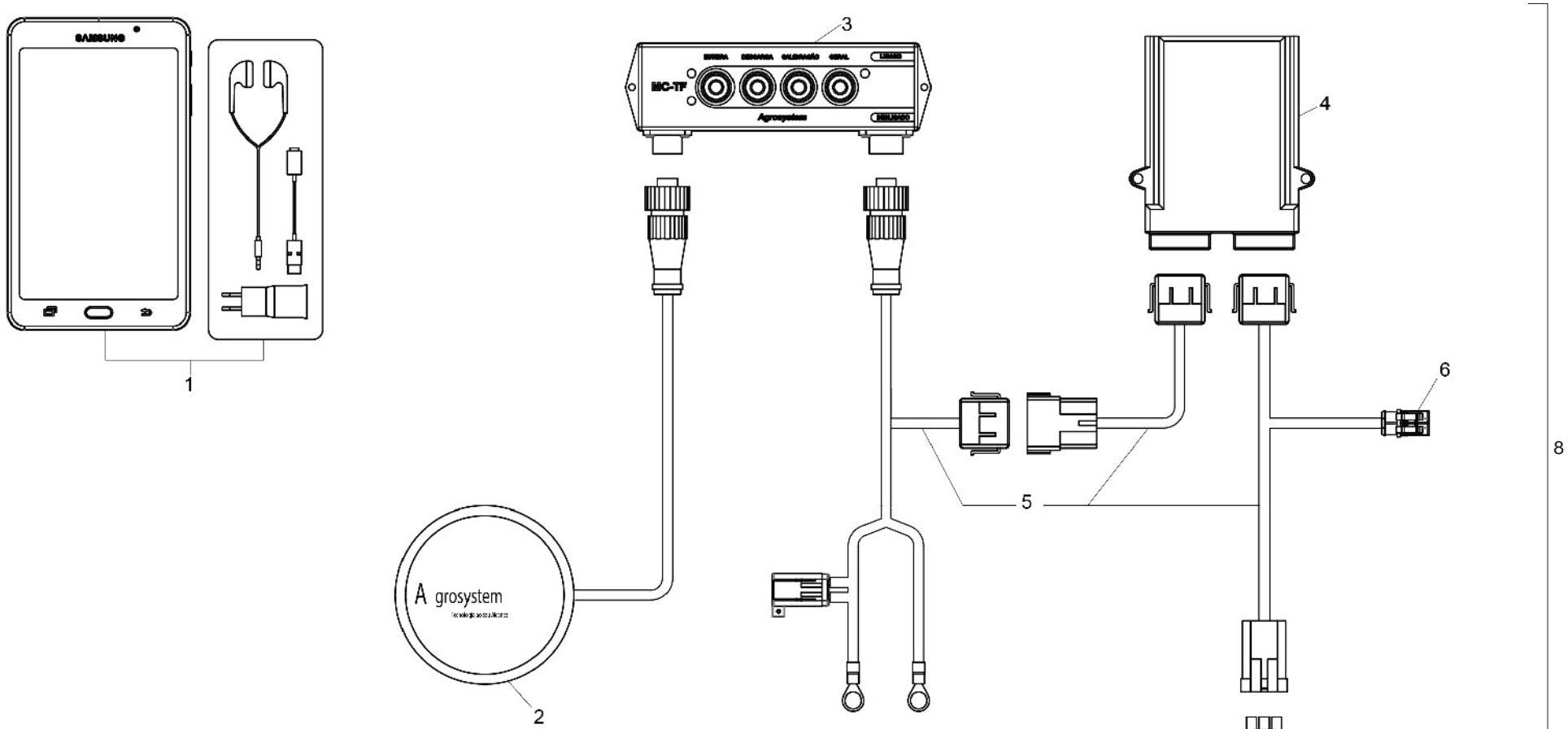

Item	Code	Product description	All
1	6020015967-8	Device Moto G7 Play smart phone	1
2	6020370357-3	AgroSystem Speed Sensor	1
3	6020251874-8	Module MC-TF	1
4	6020251875-6	Main module MC-TF	1
5	6020058890-0	Fixed Rate Cable Set	1
6	6020058772-6	2-Way Male Superseal Connector With Terminals	1
7	6020370356-5	Inductive sensor 12mm	1
8	6020210322-0	AgroSystem Fixed Rate Control Module Kit	1

• Electronic System Raven Var. Rate

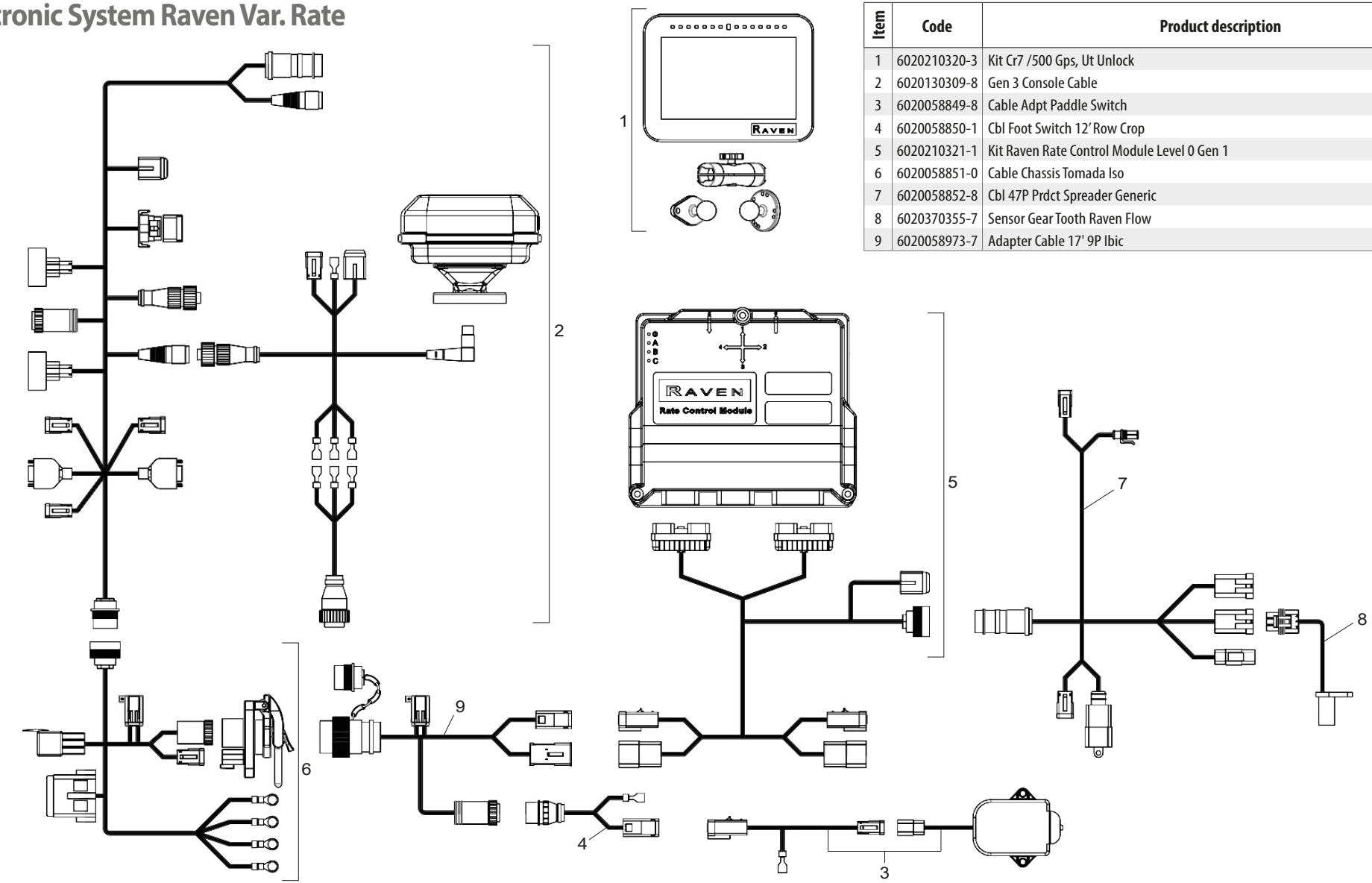

Item	Code	Product description	All
1	6020210320-3	Kit Cr7 /500 Gps, Ut Unlock	1
2	6020130309-8	Gen 3 Console Cable	1
3	6020058849-8	Cable Adpt Paddle Switch	1
4	6020058850-1	Cbl Foot Switch 12' Row Crop	1
5	6020210321-1	Kit Raven Rate Control Module Level 0 Gen 1	1
6	6020058851-0	Cable Chassis Tomada Iso	1
7	6020058852-8	Cbl 47P Prdct Spreader Generic	1
8	6020370355-7	Sensor Gear Tooth Raven Flow	1
9	6020058973-7	Adapter Cable 17' 9P Ibic	1

• Electronic System Trimble Var. Rate

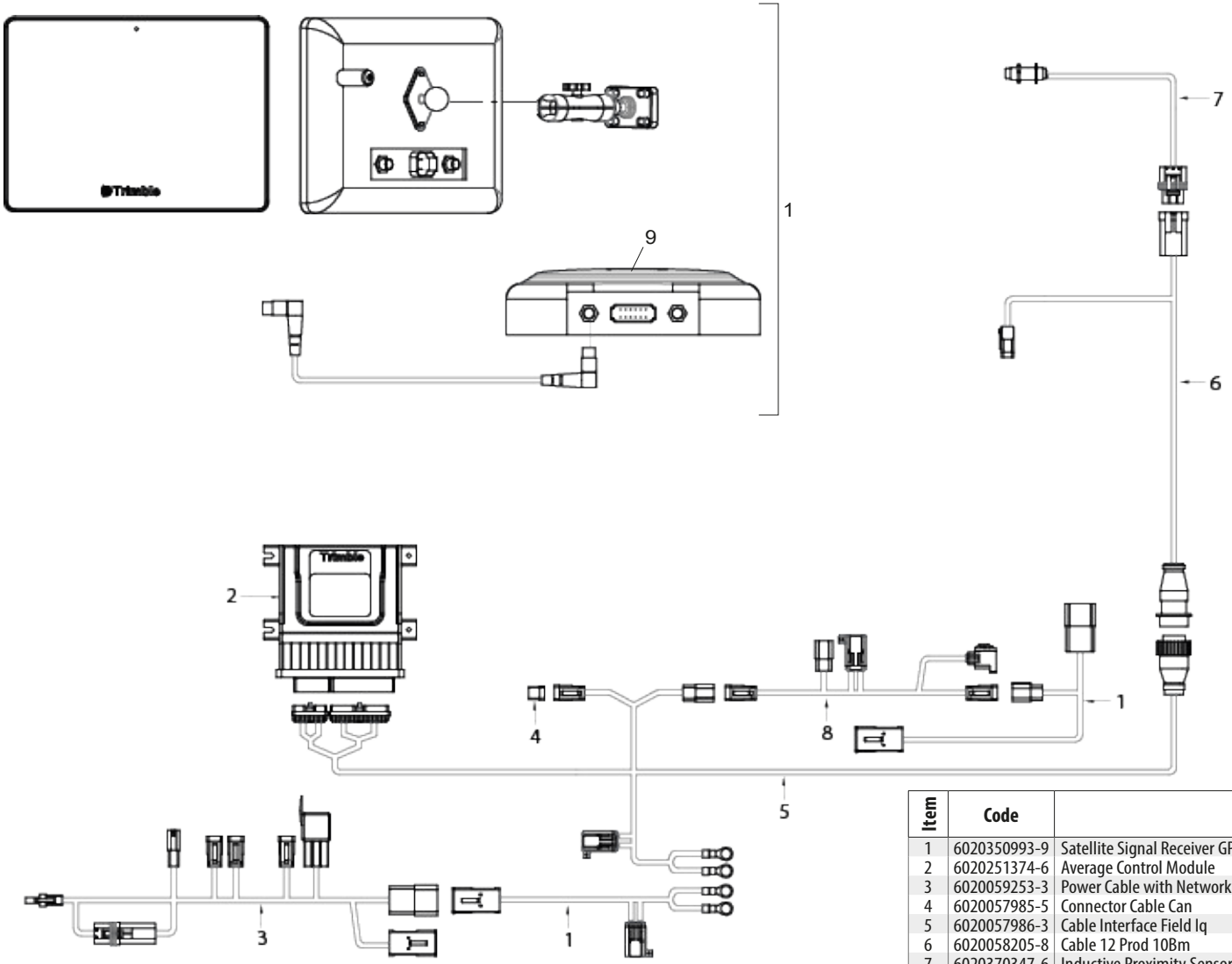

Item	Code	Product description	All
1	6020350993-9	Satellite Signal Receiver GPS Mode Trimble GFX 750 DGPS	1
2	6020251374-6	Average Control Module	1
3	6020059253-3	Power Cable with Network and Switch P FMX	1
4	6020057985-5	Connector Cable Can	1
5	6020057986-3	Cable Interface Field Iq	1
6	6020058205-8	Cable 12 Prod 10Bm	1
7	6020370347-6	Inductive Proximity Sensor M12 NO 6-36VDC NPN 3 Wires	1
8	6020059252-5	Field IQ Connection Cable	1
9	6020351012-0	Antenna (28B8e6)	1

• IsoView Fertilizer Control Monitor Kit – Agres

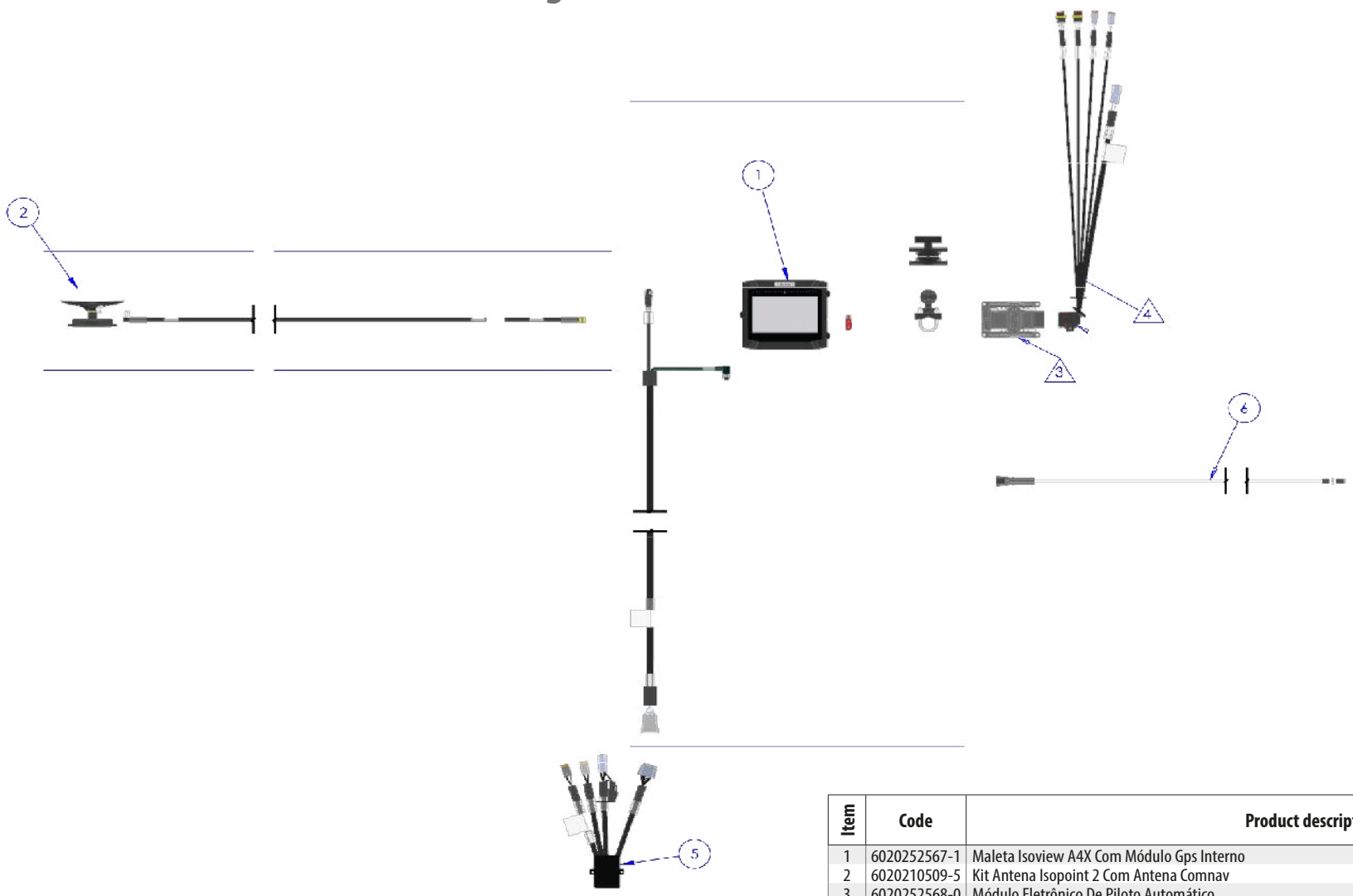

Item	Code	Product description	All
1	6020252567-1	Maleta Isoview A4X Com Módulo Gps Interno	1
2	6020210509-5	Kit Antena Isopoint 2 Com Antena Comnav	1
3	6020252568-0	Módulo Eletrônico De Piloto Automático	1
4	6020060654-2	Cabo De Conexão Ecu Hy 48 Vias Para Distribuidor Fertilizante	1
5	6020059760-8	Cabo De Divisão An21	1
6	6020060655-0	Cabo Do Sensor Indutivo Com Conector E Termo Retrátil	1

• Electronic System Raven Isobus

Item	Code	Product description	All
1	6020058849-8	Cable Adpt Paddle Switch	1
2	6020058850-1	Cbl Foot Switch 12' Row Crop	1
3	6020210321-1	Kit Raven Rate Control Module Level 0 Gen 1	1
4	6020058852-8	Cbl 47P Prdct Spreader Generic	1
5	6020370355-7	Sensor Gear Tooth Raven Flow	1
6	6020058973-7	Adapter Cable 17' 9P Ibic	1

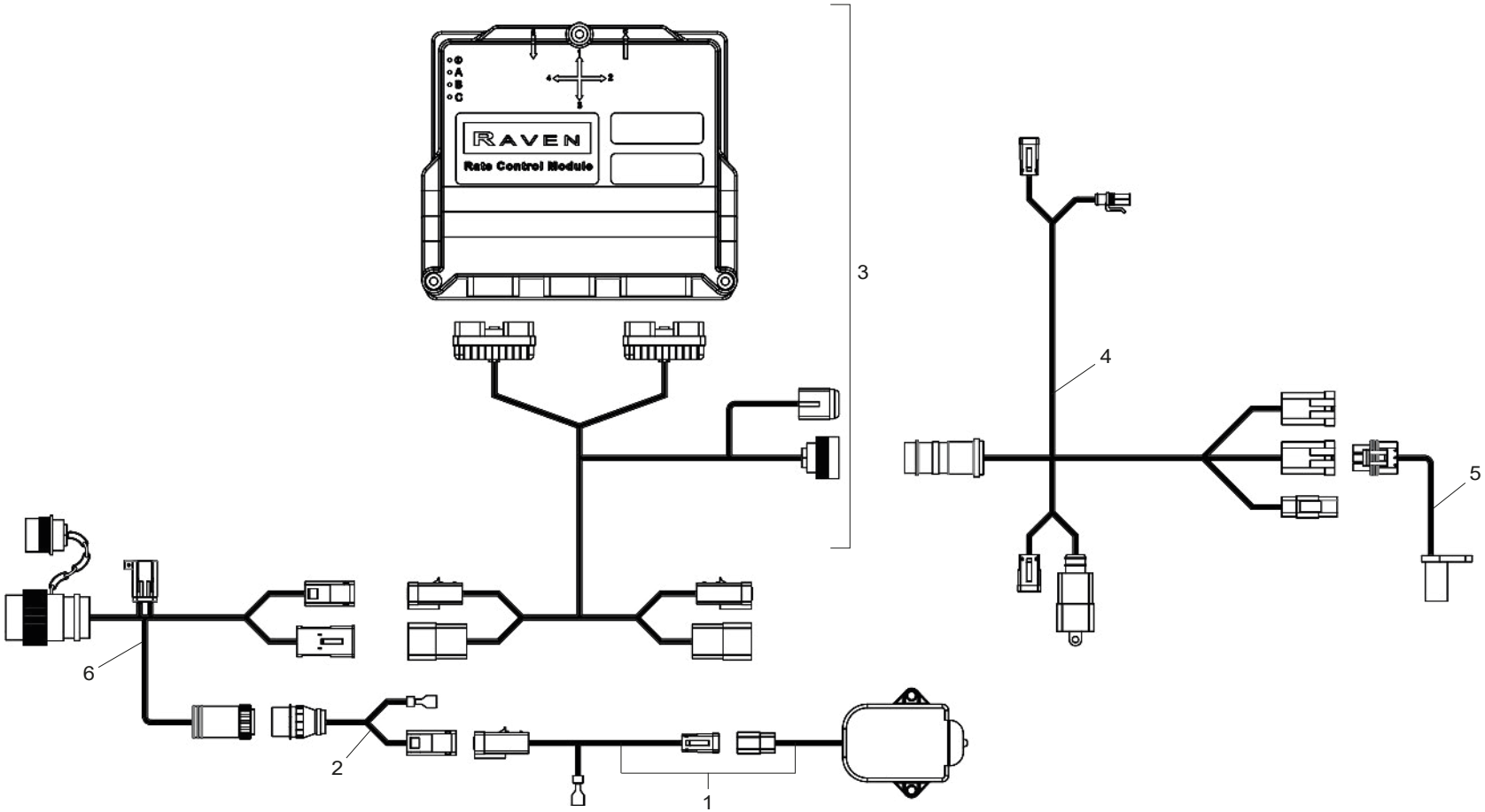

• Stickers Fertiliza 9000

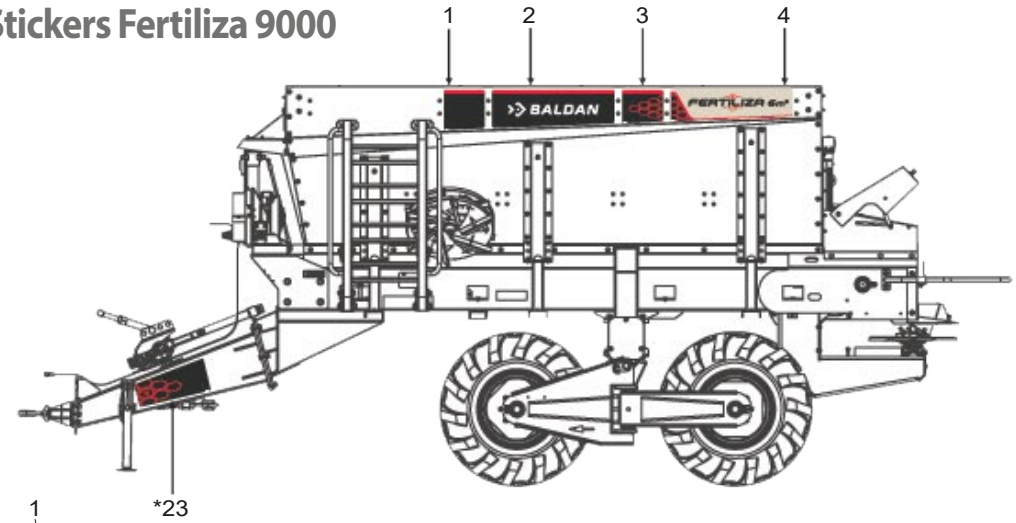

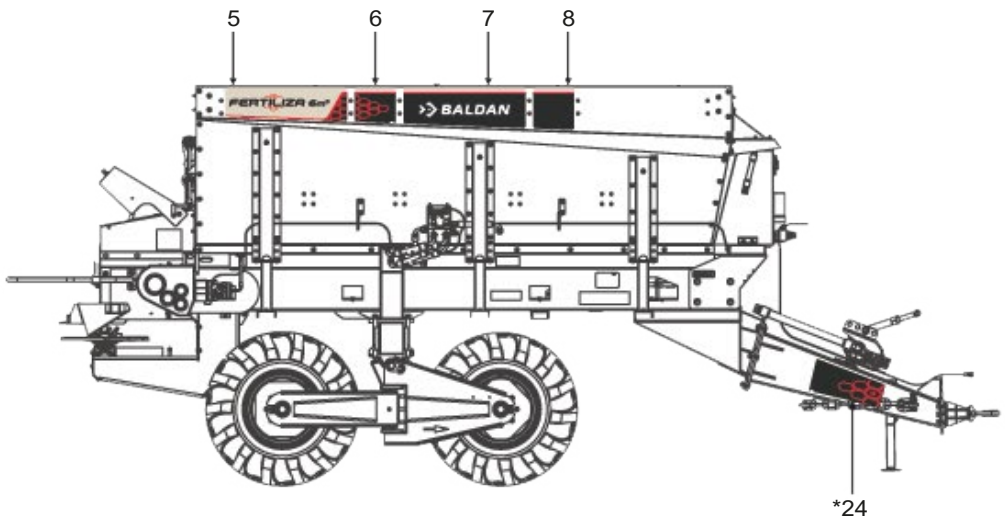

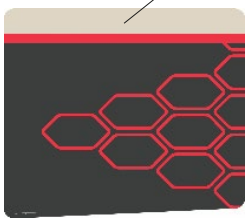

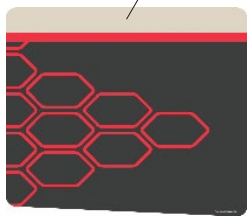

* Itens 23 and 24 - See page 36

• Stickers Fertiliza 12000

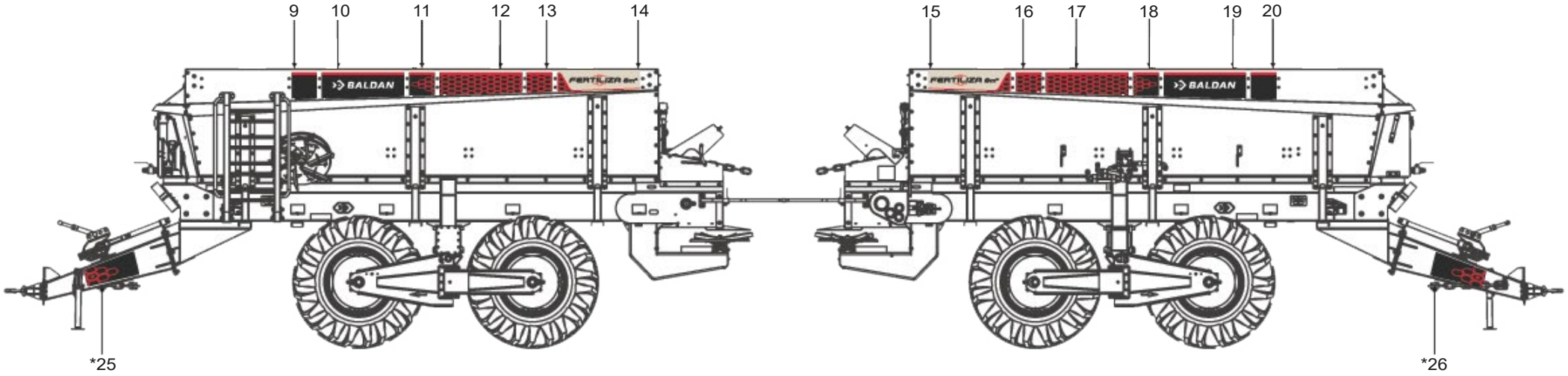

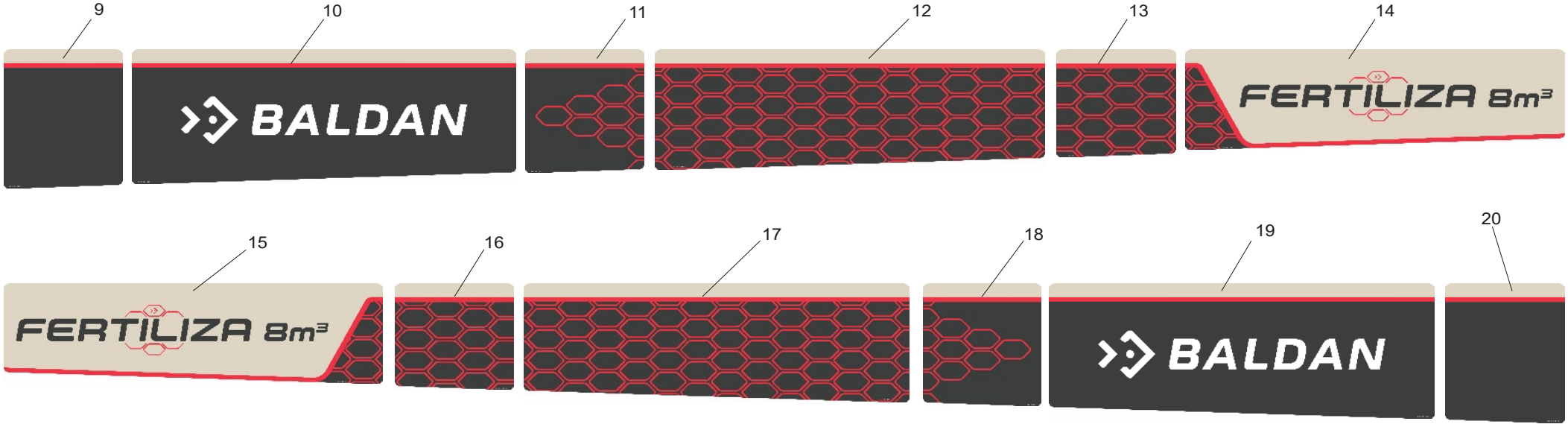

* Itens 25 and 26 - See page 36

• Stickers

Item	Code	Product description	All	9000	12000
1	6020080392-5	Stickers Bottom Left (260 X 269mm)		1	
2	6020080394-1	Stickers Left Baldan (257 X 780mm)		1	
3	6020080396-8	Stickers Left Graphic Background (227 X 260mm)		1	
4	6020080398-4	Stickers Fertilize 6M³ Left (215 X 780mm)		1	
5	6020080397-6	Stickers Fertilize 6M³ Right (215 X 780mm)		1	
6	6020080395-0	Right Graphics Background Stickers (227 X 260mm)		1	
7	6020080393-3	Right Baldan Stickers (257 X 780mm)		1	
8	6020080391-7	Stickers Right Bottom (260 X 269mm)		1	
9	6020080400-0	Stickers left Bottom (240 X 281mm)			1
10	6020080402-6	Stickers left Bottom (272,5 X 780mm)			1
11	6020080404-2	Stickers Left Graphic Background (240 X 248mm)			1
12	6020080406-9	Stickers Left Graphic Background (239 X 780mm)			1
13	6020080408-5	Stickers Left Graphic Background (214 X 240mm)			1
14	6020080410-7	Stickers Fertiliza 8M³ Left (205 X 780mm)			1
15	6020080409-3	Stickers Fertiliza 8M³ Right (205 X 780mm)			1
16	6020080407-7	Right Graphic Background Stickers (214 X 240mm)			1
17	6020080405-0	Right Graphic Background Stickers (239 X 780mm)			1
18	6020080403-4	Right Graphic Background Stickers (240 X 248mm)			1
19	6020080401-8	Right Baldan Stickers (272.5 X 780mm)			1
20	6020080399-2	Right Bottom Stickers (240 X 281mm)			1
21	6020080411-5	Baldan Front Stickers (300 X 1050mm)	1		
22	6020080412-3	Baldan Rear Stickers (180 X 2000mm)	1		
23	6020079805-0	Left Header Stickers (260 X 580mm)		1	
24	6020079804-2	Right Header Stickers (260 X 580mm)		1	
25	6020079528-0	Left Header Stickers (260 X 580mm)			1
26	6020079527-2	Right Header Stickers (260 X 580mm)			1

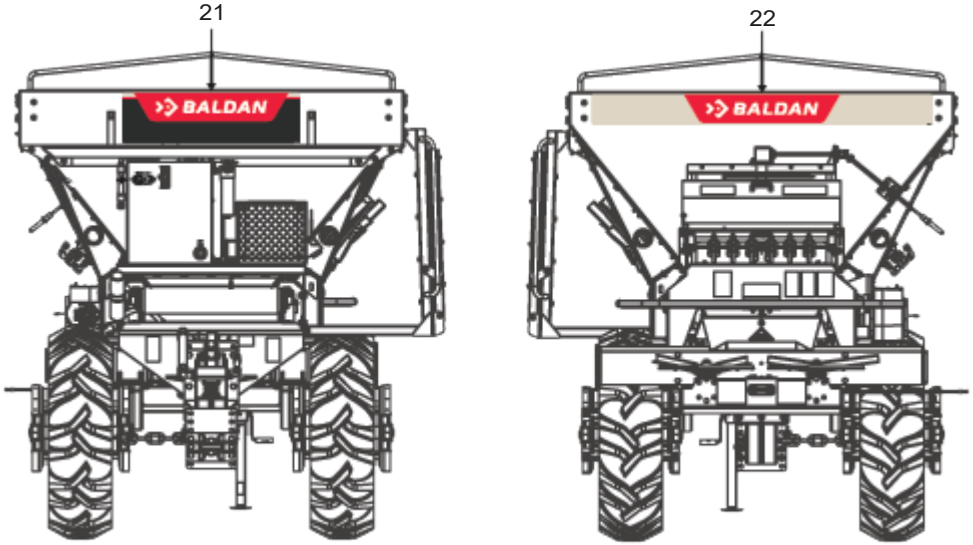

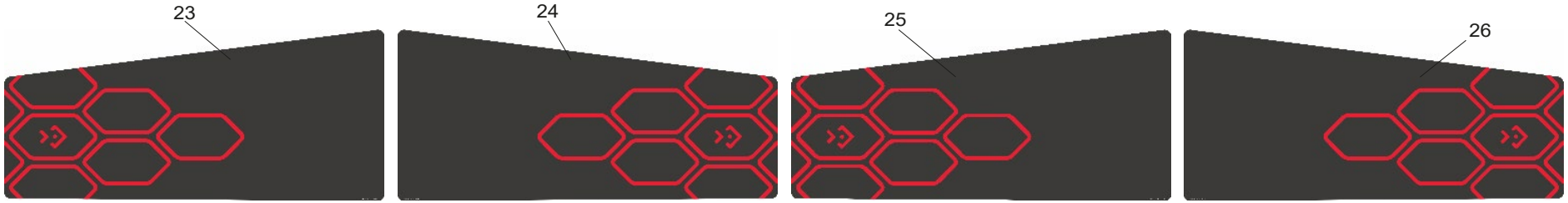

• Warning Stickers

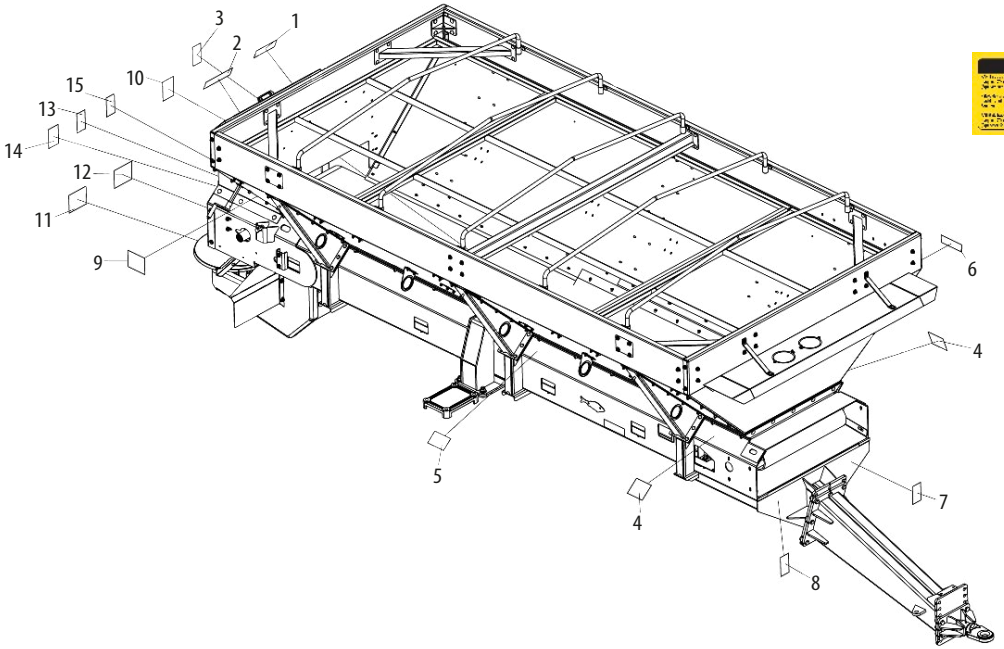

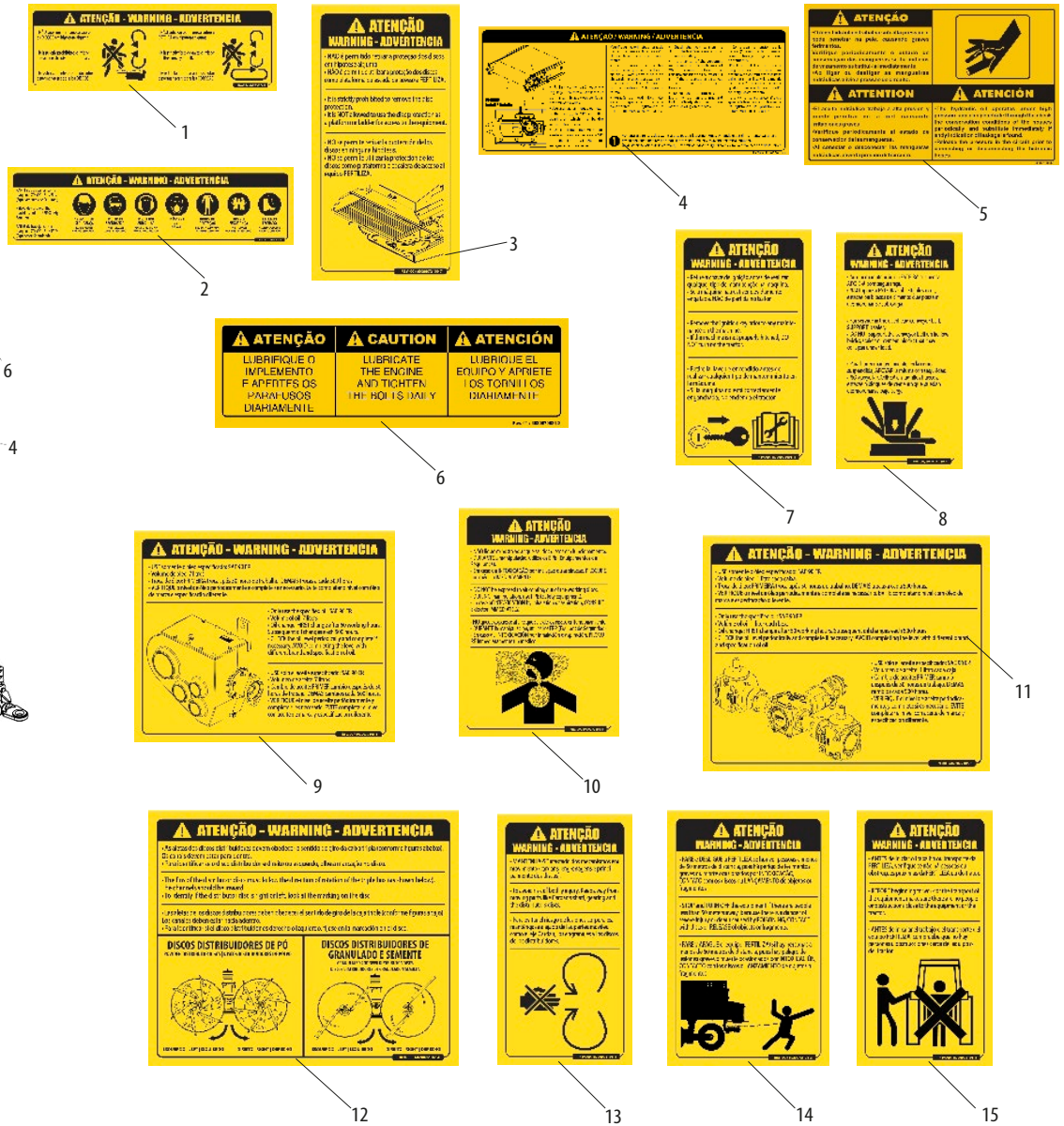

Item	Code	Product description	All
1	6020072098-1	Sticker Do not go up (Disc/Conveyor) (200 x 70mm)	1
2	6020072099-0	Sticker EPI (260 x 70mm)	1
3	6020072100-7	Sticker Discs Protecion(80 x 150mm)	1
4	6020080415-8	Stickers Attention Check Belt Tension (110 X 270mm)	1
5	5206010308-9	Sticker Hydraulic Hoses Warning(150 X 95mm)	1
6	6020070886-8	Sticker Lubricate And Retighten (58 X 195mm)	2
7	6020072096-5	Sticker Ingition Key (80 x 140mm)	1
8	6020072097-3	Sticker Conveyor Maintenance (80 x 150mm)	1
9	6020072105-8	Sticker Reductor Box (160 x 130mm)	1
10	6020072104-0	Sticker Intoxication (105 x 150mm)	1
11	6020072106-6	Sticker Triple Box (170 x 140mm)	1
12	6020072107-4	Sticker Flip Position (170 x 140mm)	1
13	6020072103-1	Sticker Rotative Mechanism (80 X 150mm)	1
14	6020072102-3	Sticker keep distance (95 x 150mm)	1
15	6020072101-5	Sticker Verification (80 x 150mm)	1

BALDAN

Avenida Baldan, 1500
Nova Matão
15.993-900
Matão/SP - Brasil
sac@baldan.com.br
export@baldan.com.br

+55 16 3221 6500
baldan.com.br