Parts
Catalog

SPDE-A

No Till Seed Drill Special

BALDAN

Index

Functional Main Frame 4
Table Functional Main Frame 5
Table Functional Main Frame 6
Transmission System 7
Table Transmission System 8
Table Transmission System 9
Wheel Support 10
Fertilizer and Seed Hopper SPDE-A (FertiSystem) 11
Table Fertilizer and Seed Hopper SPDE-A (FertiSystem) 12
Table Fertilizer and Seed Hopper SPDE-A (FertiSystem) 13
Fertilizer and Seed Hopper SPDE-A (FertiSystem) W/Pasture Seed Hopper 14
Table Fertilizer and Seed Hopper SPDE-A (FertiSystem) W/Pasture Seed Hopper 15
Table Fertilizer and Seed Hopper SPDE-A (FertiSystem) W/Pasture Seed Hopper 16
Pasture Seed Hopper 17
Table Pasture Seed Hopper 18
Dosing Set (FertiSystem) 19
Seed Dosing 20
Hitch Drawbar 21
Hydraulic System W/Distribuitor for Double Control Withoit Row Marker 22
Hydraulic System SPDE-A W/Row Marker 23
Complete Row Marker 24
Central Cylinder of Rows Articulation 25
Lateral Cylinder of Wheels Articulation 25
Row Marker Cylinder 26
Lateral Transport Assembly Cylinder 26
Speed Box 27
Planting Rows 28
Planting Rows 29
Row W/Rippled Cutting Disc W/Iron Compactor Wheel Heavy W/Frieze Of 40mm 30
Table Row W/Rippled Cutting Disc W/Iron Compactor Wheel Heavy W/Frieze Of 40mm 31
Table Row W/Rippled Cutting Disc W/Iron Compactor Wheel Heavy W/Frieze Of 40mm 32
Row W/Cutting Disc and Compactation Wheel type "V" - Spacing 170mm 33
Table Row W/Cutting Disc and Compactation Wheel type "V" - Spacing 170mm 34
Table Row W/Cutting Disc and Compactation Wheel type "V" - Spacing 170mm 35
Lateral Row W/Cutting Disc and Compactation Wheel type "V" - Spacing 170mm 36
Table Lateral Row W/Cutting Disc and Compactation Wheel type "V" - Spacing 170mm 37
Table Lateral Row W/Cutting Disc and Compactation Wheel type "V" - Spacing 170mm 38
Row W/Cutting Disc and Compactation Wheel type "V" - Spacing 250mm 39
Table Row W/Cutting Disc and Compactation Wheel type "V" - Spacing 250mm 40
Table Row W/Cutting Disc and Compactation Wheel type "V" - Spacing 250mm 41
Lateral Row W/Cutting Disc and Compactation Wheel type "V" - Spacing 250mm 42
Table Lateral Row W/Cutting Disc and Compactation Wheel type "V" - Spacing 250mm 43
Table Lateral Row W/Cutting Disc and Compactation Wheel type "V" - Spacing 250mm 44
Row W/Cutting Disc and Concave Depth Wheel W/Regulator Sup.(Frieze 40mm) - Spacing 170mm 45
Table Row W/Cutting Disc and Concave Depth Wheel W/Reg. Sup.(Frieze 40mm) - Spacing 170mm 46
Table Row W/Cutting Disc and Concave Depth Wheel W/Reg. Sup.(Frieze 40mm) - Spacing 170mm 47
Lateral Row W/Cutting Disc and Concave Depth Wheel W/Reg. Sup.Frieze 40mm) - Spacing 170mm 48
Table Lateral Row W/Cutting Disc and Conc.Depth Wheel W/Regu. Sup.(Frieze 40mm) - Spacing 170mm 49
Table Lateral Row W/Cutting Disc and Conc. Depth Wheel W/Reg. Sup.(Frieze 40mm) - Spacing 170mm 50
Row W/ Heavy Iron Compaction Wheel - Spacing 170mm 51
Table Row W/ Heavy Iron Compaction Wheel - Spacing 170mm 52
Table Row W/ Heavy Iron Compaction Wheel - Spacing 170mm 53
Lateral Row W/ Heavy Iron Compaction Wheel - Spacing 170mm 54
Table Lateral Row W/ Heavy Iron Compaction Wheel - Spacing 170mm 55
Table Lateral Row W/ Heavy Iron Compaction Wheel - Spacing 170mm 56
Row W/Rippled Cutting Disc and Heavy Iron Compactation Wheel - Spacing 250mm 57
Table Row W/Rippled Cutting Disc and Heavy Iron Compactation Wheel - Spacing 250mm 58
Table Row W/Rippled Cutting Disc and Heavy Iron Compactation Wheel - Spacing 250mm 59
Lateral Row W/Rippled Cutting Disc and Heavy Iron Compactation Wheel - Spacing 250mm 60
Table Lateral Row W/Rippled Cutting Disc and Heavy Iron Compactation Wheel - Spacing 250mm 61
Table Lateral Row W/Rippled Cutting Disc and Heavy Iron Compactation Wheel - Spacing 250mm 62
Row W/Rippled Cutting Disc W/"V" Compactor Wheel W/Frieze Of 40mm 63
Table Row W/Rippled Cutting Disc W/"V" Compactor Wheel W/Frieze Of 40mm 64
Table Row W/Rippled Cutting Disc W/"V" Compactor Wheel W/Frieze Of 40mm 65
Row W/"V" Compactor Wheel W/Frieze Of 40mm 66
Table Row W/"V" Compactor Wheel W/Frieze Of 40mm 67
Complete Compactation Wheel Type "V" 68
Large Concave Depth Wheel W/Regulator Support 69
Complete Heavy Iron Compactation Wheel 70
Lateral Transport Kit SPDE-A (Optional) 71
Table Lateral Transport Kit SPDE-A (Optional) 72
Complete Transport Support 73
Wheel Support 74
Stickers 75-77

• Functional Main Frame

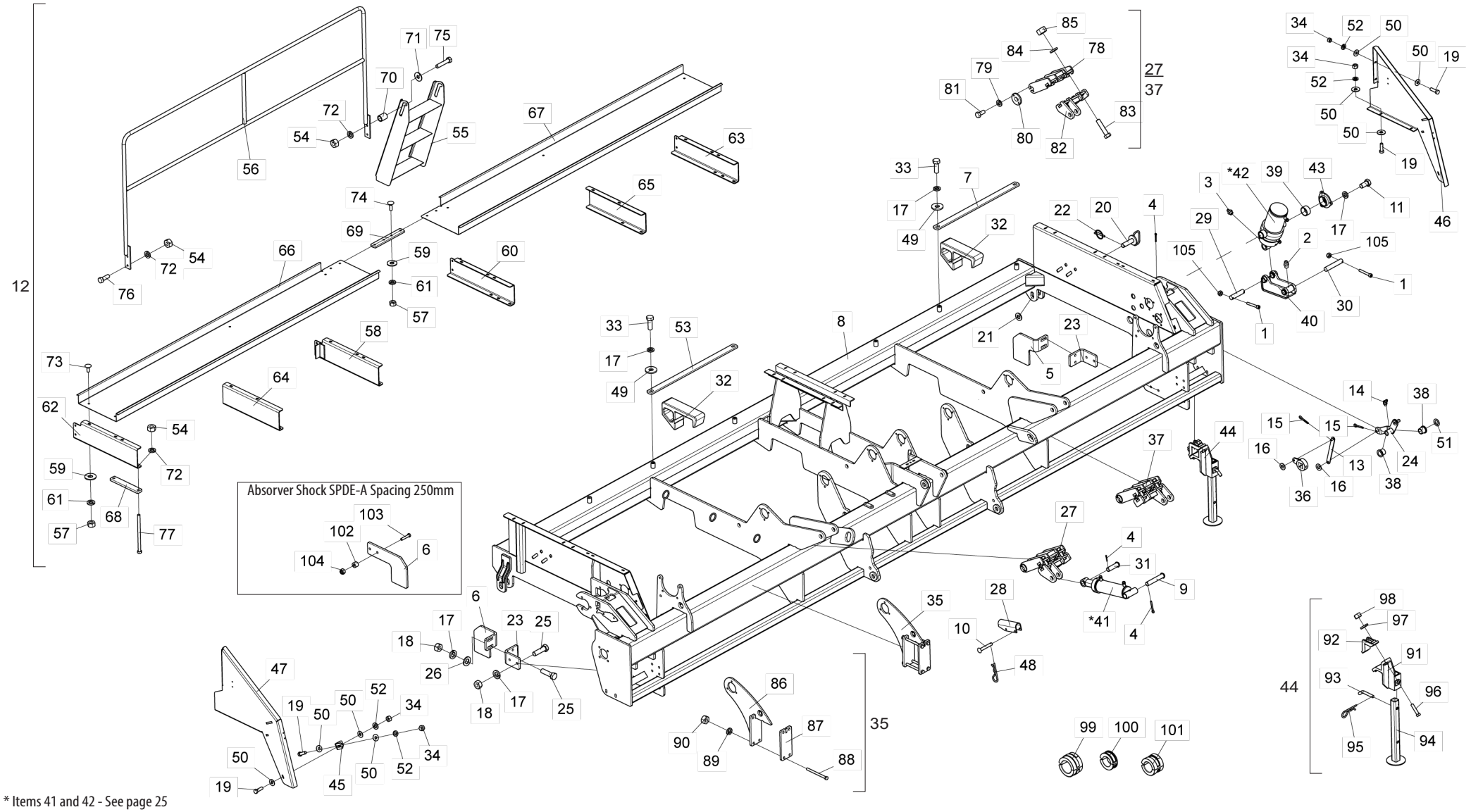

* Items 41 and 42 - See page 25

• Table Functional Main Frame

Item	Code	Product description	All	Spa. 170mm	Spa. 250mm
1	6020310903-5	Allen screw C/C M8X1, 25x55 mm CL12,9 RP	6		
2	6020130100-1	Grease Fitting 1/4"	2		
3	6020130108-7	Grease Fitting 1/8"	2		
4	6020050106-6	Cotterpin 3/16" X 1.1/2"	6		
5	5048010053-8	Right Chock Absorver Of Rows		1	
6	5048010054-6	Left Chock Absorver Of Rows		1	
6	5048010092-9	Chock Absorver Of Rows			2
7	5040010750-2	Bar Of 2" X 1/2" X 910Mm	2		
8	5404010446-4	Main Frame Spde-A 7000	1		
9	5432120117-5	French Head Pin Ø30,53 X 165Mm	2		
10	6020310421-1	French Head Pin Ø9,8 X 61Mm	4		
11	6020310433-5	Hexagonal Head Bolt 5/8" X 1.1/4" 18F Unf1A Gr5 Rt	12		
12	5440010878-4	Complete Platform For Plastic Box (Spdea-7000)	1		
13	5072011703-4	Ratchet Disarm Arm	2		
14	6020130104-4	Grease Fitting 1/4"	2		
15	6020050099-0	Cotterpin 1/8" X 3/4"	4		
16	5024010162-6	Smooth Washer Ø13 X Ø26 X 2,00Mm	4		
17	6020010412-1	Pressure Washer 5/8" Media Industry		36	28
18	6020310760-1	Hexagonal Nut 5/8" 11F Unc Gr5 Ch.1.1/16" Height 15,00Mm		8	
19	6020310026-7	Hexagonal Head Bolt 3/8" X 1.1/4" 16F Unc1A Gr5 Rt	12		
20	5432010489-3	Pin Ø1.1/4" X 102Mm	2		
21	5024010249-5	Smooth Washer Ø32 X Ø60 X 6,30Mm(Galvanised)	2		
22	6020390293-2	Lock Ø5,75 X 40Mm	2		
23	5530015261-8	Chock Absorver Support Of Rows		2	
24	5008010248-5	Left Handle Of Ratchet	1		
24	5008010249-3	Right Handle Of Ratchet	1		
25	6020311075-0	Hexagonal Head Bolt 5/8" X 2.1/4" 11F Unc1A Gr5 Rp		8	
26	5024010154-5	Smooth Washer Ø16 X Ø29 X 3,00Mm		4	
27	5252010204-3	Complete Rigth Piston Hitch With Bushing		1	
27	5252010249-3	Right Hitch of Piston W/Bushing			1
28	5558040007-7	Piston Lock Of 190Mm	2		
29	5432010177-0	Flat Pin Ø1.1/4" X 119Mm	2		
30	5432010178-9	Flat Pin Ø1.1/4" X 177,5Mm	2		
31	5432120090-0	French Head Pin Ø30,53 X 97Mm	2		
32	6010602569-2	Counterweight	30		
33	6020310179-4	Hexagonal Head Bolt 5/8" X 1.3/4" 11F Unc1A Gr5 Rt	8		
34	6020310746-6	Hexagonal Nut 3/8" 16F Unc Gr5 Ch.9/16" Height 8,50Mm	12		
35	5530014527-1	Support Of Shaft	2		
36	5072060004-5	Disarm Right Arm Of Ratchet	1		
36	5072060005-3	Left Arm Of Disarm Of Ratchet	1		
37	5252010205-1	Complete Left Of Piston With Bushing		1	
37	5252010250-7	Right Hitch of Piston W/Bushing			1

Item	Code	Product description	All	Spa. 170mm	Spa. 250mm
38	5080010840-0	Bushing Of Ø22,5 X Ø38 X 28Mm	4		
39	5080010389-1	Flange Bronze Bushing	4		
40	5530015373-8	Articulation Support Of Drawbar	2		
*41	6020055703-7	Hydraulic Cylinder "O.D" Ø1.5/8" X Ø3.1/4" X 200Mm(Course) X 492Mm(Closed)	2		
*42	6020055907-2	Hydraulic Cylinder "O.D" Ø2" X Ø5" X 180Mm(Course) X 184,6Mm(Closed)	2		
43	5284010041-3	Flange Of Piston Support	4		
44	5530030118-4	Complete Support 540mm	2		
45	5136013871-6	Protection Fixation Plate	2		
46	5464010424-7	Left Lateral Protection of Main Frame	1		
47	5464010423-9	Right Lateral Protection of Main Frame	1		
48	6020390308-4	Lock Nma - Type "R" Ø4,5 X 80Mm	4		
49	5024010298-3	Smooth Washer Ø17 X Ø44 X 4,75Mm	8		
50	5024010075-1	Smooth Washer Ø10,3 X Ø25 X 2,00Mm	32		
51	5024010137-5	Smooth Washer Ø23 X Ø38 X 2,00Mm	2		
52	6020010406-7	Pressure Washer 3/8" Media Industry	28		
53	5040010629-8	Bar Of 2" X 1/2" X 960Mm	2		
54	6020310754-7	Hexagonal Nut 1/2" 12F W Gr5 Ch.7/8" Height 12,00Mm	20		
55	5259010022-6	Stair 3 Steps	1		
56	5196010231-6	Platform Handrail(Spde-A 7000)	2		
57	6020310746-6	Hexagonal Nut 3/8" 16F Unc Gr5 Ch.9/16" Height 8,50Mm	16		
58	5530014881-5	Right Central Support Of Platform Plastic Box	1		
59	5024010075-1	Smooth Washer Ø10,3 X Ø25 X 2,00Mm	16		
60	5530014883-1	Left Central Support Of Platform Plastic Box	1		
61	6020010406-7	Pressure Washer 3/8" Media Industry	16		
62	5530014882-3	Platform Right Support	1		
63	5530014884-0	Platform Left Support	1		
64	5530014887-4	Right Central Support Of Platform Plastic Box	1		
65	5530014888-2	Left Central Support Of Platform Plastic Box	1		
66	5136013740-0	Platform Right Plate(Spde-A 7000)	1		
67	5136013741-8	Left Plate Of Platform(Spde-A 7000)	1		
68	5040010607-7	Fixation Bar	6		
69	5136011940-1	Fixation Plate	1		
70	5080020100-1	Bushing Of Ø14 X Ø17,94 X 24Mm	2		
71	5024010068-9	Smooth Washer Ø13,3 X Ø35,5 X 3,00Mm	2		
72	6020010410-5	Pressure Washer 1/2" Media Industry	20		
73	6020311160-9	French Head Bolt 3/8" X 1" 16F Unc1A Gr2 Rt	12		
74	6020311090-4	French Head Bolt 3/8" X 1.1/4" 16F Unc1A Gr2 Rp	4		
75	6020312300-3	Hexagonal Head Bolt 1/2" X 2.1/2" 12F W Gr5 Rp	2		
76	6020312001-2	Hexagonal Head Bolt 1/2" X 1.1/2" 12F W Gr5 Rt	6		
77	6020310055-0	Hexagonal Head Bolt 1/2" X 8.1/2" 12F W Gr5 Rp	12		
78	5530015369-0	Fixation Support Of Spring Rod		2	
78	5530016656-2	Fixation Right Support of Spring Rod			1

BALDAN

• Table Functional Main Frame

Item	Code	Product description	All	Spa. 170mm	Spa. 250mm
78	5530016657-0	Fixation Left Support of Spring Rod			1
79	6020010404-0	Pressure Washer 5/16" Media Industry	16		
80	6020030715-4	Articulation Bushing Of Spring Rod	8		
81	6020312020-9	Hexagonal Head Bolt 5/16" X 3/4" 18F Unc1A Gr5 Rt	16		
82	5530015367-3	Right Support of Row Cylinder - **Minor Support**		1	
82	5530015368-1	Left Support of Row Cylinder - **Minor Support**		1	
82	5530016654-6	Right Support of Row Cylinder - **Larger Support**			1
82	5530016655-4	Left Support Of Row Cylinder - **Larger Support**			1
83	6020311098-0	Hexagonal Head Bolt 3/4" X 3.1/2" 10F Unc1A Gr5 Rp	8		
84	6020010414-8	Pressure Washer 3/4" Media Industry	8		
85	6020310770-9	Hexagonal Nut 3/4" 10F Unc Gr5 Ch.1.7/32" Height 18,50Mm	8		
86	5530014528-0	Fixation Support Of Shaft	2		
87	5136013766-3	Plate Of 262 X 113,5 X 5/8"	2		
88	6020312508-1	Hexagonal Head Bolt 5/8" X 8" 11F Unc1A Gr5 Rp	8		
89	6020010412-1	Pressure Washer 5/8" Media Industry	8		
90	6020310760-1	Hexagonal Nut 5/8" 11F Unc Gr5 Ch.1.1/16" Height 15,00Mm	8		
91	6010601107-1	Back Fixation Support	2		
92	6010600770-8	Clamp	2		
93	5432020032-9	Pin "L" Ø3/4" X 94Mm	2		
94	5530030115-0	Support Of 540Mm	2		
95	6020390308-4	Lock Nma - Type "R" Ø4,5 X 80Mm	2		
96	6020311098-0	Hexagonal Head Bolt 3/4" X 3.1/2" 10F Unc1A Gr5 Rp	4		
97	6020010414-8	Pressure Washer 3/4" Media Industry	4		
98	6020310770-9	Hexagonal Nut 3/4" 10F Unc Gr5 Ch.1.7/32" Height 18,50Mm	4		
99	5348050012-8	Complete Limiter Of Ø51 X 49,5Mm	4		
100	5348050006-3	Complete Limiter Of Ø42 X 25Mm	2		
101	5348050009-8	Complete Limiter Of Ø42 X 49,5Mm	2		
102	5080011760-4	Fixing Bushing of Chock Absorver			4
103	6020310186-7	Hexagonal Head Bolt M16 X 2,00 X 80Mm Cl8.8 Rp			4
104	6020317443-0	Self-Locking Nut With Nylon M16 X 2,00 Ma Cl8 Ch.24Mm H.16,00Mm			4
105	6020317449-0	Nut Sext. Self. C/Nylon low M8X1.25X MA CL8 CH.13mm Height 8.00mm	6		

• Transmission System

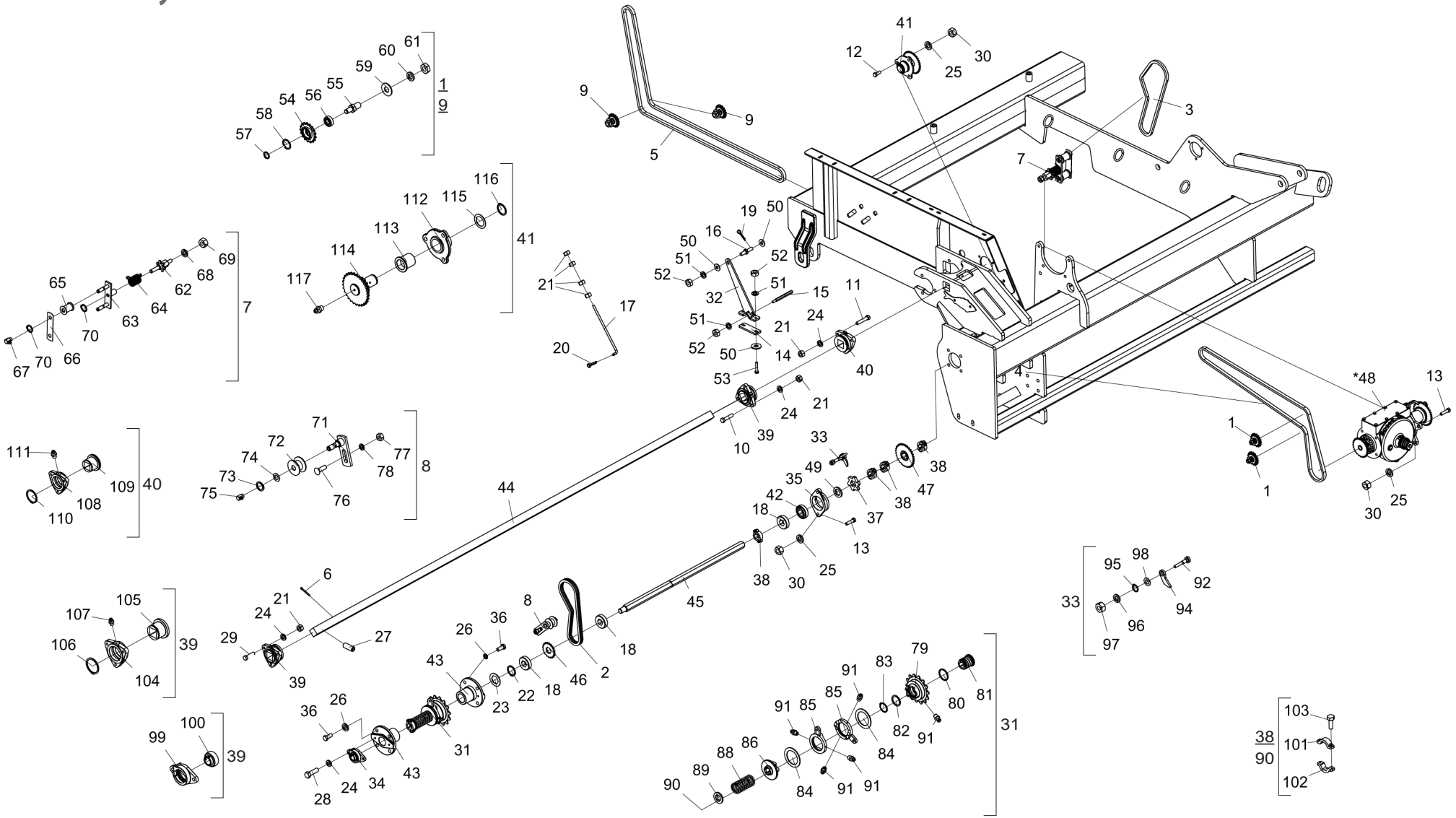

* Item 48 - See page 27

BALDAN

• Table Transmission System

Item	Code	Product description	All
1	5268010807-2	Complete Stretcher With Gear 17 Teeth (Asa 40) R.1/2"	4
2	6020050140-6	Chain (Asa 40) 65 Links + Amendment	2
3	6020051042-1	Chain (Asa 40) 89 Links + Amendment	2
4	6020055275-2	Chain (Asa 40) 173 Links + Amendment	2
5	6020056009-7	Chain (Asa 40) 248 Links + Reduction	2
6	6020050116-3	Cotterpin 1/4" X 2"	4
7	5268010221-0	Complete Left Stretcher	1
7	5268010222-8	Complete Right Stretcher	1
8	5268010141-8	Complete Chain Stretcher	2
9	5268010808-0	Complete Stretcher With Gear 17 Teeth (Asa 40) R.3/4"	4
10	6020311034-3	Hexagonal Head Bolt 3/8" X 1.3/4" 16F Unc1A Gr2 Rp	18
11	6020310296-0	Hexagonal Head Bolt 3/8" X 2" 16F Unc1A Gr5 Rp	6
12	6020310051-8	Hexagonal Head Bolt 1/2" X 1.1/4" 12F W Gr5 Rt	6
13	6020310049-6	Hexagonal Head Bolt 1/2" X 2" 12F W Gr5 Rp	10
14	5136016272-2	Support Fixation Plate	2
15	5232011967-7	Hexagonal Shaft 1/2" X 130Mm	2
16	5432010639-0	Disarm Pin Of Ratchet	2
17	5484010151-0	Ratchet Disarm Regulator	2
18	6020030091-5	Bushing With Hexagonal Hole 1.1/4" Of 070 X 20Mm	6
19	6020050099-0	Cotterpin 1/8" X 3/4"	2
20	6020050104-0	Cotterpin 3/16" X 1"	2
21	6020310746-6	Hexagonal Nut 3/8" 16F Unc Gr5 Ch.9/16" Height 8,50Mm	38
22	6020010264-1	Retaining Oring	2
23	5024010490-0	Washer With Hexagonal Hole Ø32Mm	2
24	6020010406-7	Pressure Washer 3/8" Media Industry	22
25	6020010410-5	Pressure Washer 1/2" Media Industry	16
26	6020010412-1	Pressure Washer 5/8" Media Industry	8
27	6020310114-0	Allen Bolt S/C 1/2" X 1.1/4" 12F W Cl12.9 Rt (Phosphated)	2
28	6020310026-7	Hexagonal Head Bolt 3/8" X 1.1/4" 16F Unc1A Gr5 Rt	4
29	6020311029-7	Hexagonal Head Bolt 3/8" X 1.1/2" 16F Unc1A Gr5 Rt	6
30	6020310756-3	Hexagonal Nut 1/2" 12F W Gr5 Ch.3/4" Height 11,00Mm	16
31	5132010021-0	Complete Ratchet	1
31	5132010027-9	Complete Right Ratchet	1
32	5530016239-7	Fixation Support	2
33	5558010245-9	Left Lock Of Complete Rossette	1
33	5558010246-7	Right Lock Of Complete Rossette	1
34	5368010422-7	Sleeve Bearing With Self Compensation Gy1100 Krrb De Ø1"	2
35	6020250419-4	Cast Iron Bearing Type Flange Cjt-07 With Fitting Grease 1/8" 28F (Frm)	2
36	6020310434-3	Hexagonal Head Bolt 5/8" X 1.1/2" 18F Unf1A Gr5 Rt	16
37	5200010005-6	Rossette	2

Item	Code	Product description	All
38	5460010007-9	Complete Shaft Of Clamp	8
39	5204010306-6	Complete Shaft Hub	8
40	5204010405-4	Complete Shaft Hub	2
41	5204010313-9	Complete Transmission Hub (Spd-E)	2
42	6020250116-0	Bearing Assy F-110949	2
43	5284010040-5	Flange Of Wheel Support	4
44	5232011300-8	Shaft 1.1/2" X 2915,5Mm	1
44	5232011301-6	Shaft 1.1/2" X 2991,5Mm	1
45	5232010698-2	Hexagonal Shaft 1.1/4" X 900Mm	2
46	5256010103-1	Gear 20 Teeth	2
47	5256010056-6	Complete Gear 20/31 Teeth With Hexagonal 1.1/4"	2
*48	5092010609-6	Right Speed Box (Fertilizer)	1
*48	5092010610-0	Left Speed Box (Fertilizer)	1
49	5024010406-4	Hexagonal Smooth Washer 32 X Ø55 X 6,30Mm	2
51	6020010394-0	Pressure Washer M10 Media	8
52	6020310822-5	Hexagonal Nut M10 X 1,50 Ma Cl8 Ch.17Mm H.8,00Mm	8
53	6020310269-3	Hexagonal Head Bolt M10 X 1,50 X 55Mm Cl8.8 Rt	4
54	5256010366-2	Complete Gear 17 Teeth(Asa 40)	8
55	5232011562-0	Fixation Shaft Of Stretcher R.1/2"	4
55	5232011563-9	Fixation Shaft Of Stretcher Thread 3/4"	4
56	6020350015-0	Bearing 6202 2Rs Ddu	8
57	6020010250-1	Retaining Oring	8
58	6020010284-6	Retaining Ring I-35	8
59	5024010068-9	Smooth Washer Ø13,3 X Ø35,5 X 3,00Mm	4
59	5024010142-1	Smooth Washer Ø20,3 X Ø46,5 X 3,00Mm	4
60	6020010410-5	Pressure Washer 1/2" Media Industry	4
60	6020010414-8	Pressure Washer 3/4" Media Industry	4
61	6020310756-3	Hexagonal Nut 1/2" 12F W Gr5 Ch.3/4" Height 11,00Mm	4
61	6020310784-9	Hexagonal Nut 3/4" 10F Unc Gr5 Ch.1.1/4" Height 11,00Mm	2
62	5232010628-1	Left Shaft Of Stretcher	1
62	5232010629-0	Right Stretcher Shaft	1
63	5268010146-9	Spare Chain Stretcher	2
64	6020250218-3	Torsion Helical Spring Ø38 X Ø46 X 67Mm	1
64	6020250219-1	Torsion Helical Spring Ø38 X Ø46 X 67Mm	1
65	5506010014-3	Roller Of Stretcher	4
66	5136020627-4	Front Plate Of Stretcher	2
67	6020130112-5	Grease Fitting 1/8"	4
68	6020010412-1	Pressure Washer 5/8" Media Industry	2
69	6020310760-1	Hexagonal Nut 5/8" 11F Unc Gr5 Ch.1.1/16" Height 15,00Mm	2
70	6020010252-8	Retaining Oring	6

• Table Transmission System

Item	Code	Product description	All
71	5268010142-6	Spare Chain Stretcher	2
72	6020350849-5	Stretcher Pulley	2
73	6020010252-8	Retaining Oring	2
74	5024010059-0	Smooth Washer Ø16,5 X Ø29 X 1,21Mm	2
75	6020130112-5	Grease Fitting 1/8"	2
76	6020311175-7	French Head Bolt 1/2" X 1.5/8" 12F W Gr2 Rt	2
77	6020310754-7	Hexagonal Nut 1/2" 12F W Gr5 Ch.7/8" Height 12,00Mm	2
78	6020010410-5	Pressure Washer 1/2" Media Industry	2
79	5256010267-4	Gear 14 E 6 Teeth Of Left Ratchet	1
79	5256010466-9	Gear 14 And 6 Teeth Of Right Ratchet	1
80	5024010541-9	Smooth Washer Ø55,5 X Ø63,5 X 3,00Mm	2
81	5080010935-0	Hexagonal Bushing Of 1.1/4"	2
82	5024010544-3	Smooth Washer Ø47 X Ø59,2 X 2,00Mm	2
83	6020010272-2	Retaining Ring E-46	2
84	5024010542-7	Smooth Washer Ø77 X Ø108 X 3,00Mm	4
85	5526010034-2	Separator Of Ratchet	4
86	5256010268-2	Internal Left Gear Of Right Ratchet	1
86	5256010465-0	Internal Right Gear Of Right Ratchet	1
88	6020250573-5	Ratchet Spring	2
89	5024010543-5	Smooth Washer Ø46,2 X Ø60 X 12,50Mm	2
90	5460010007-9	Complete Shaft Of Clamp	2
91	6020130100-1	Grease Fitting 1/4"	10
92	5432010175-4	Lock Pin Of Trigger	2
94	5558050016-0	Lock Of Rossette	2
95	6020010252-8	Retaining Oring	2
96	6020010410-5	Pressure Washer 1/2" Media Industry	2
97	6020310754-7	Hexagonal Nut 1/2" 12F W Gr5 Ch.7/8" Height 12,00Mm	2
98	5024010059-0	Smooth Washer Ø16,5 X Ø29 X 1,21Mm	2
99	5368010499-5	Fixation Bearing	2
100	6020350081-8	Bearing Gy-1100 Krrb	2
101	5460010003-6	Shaft Clamp Hexagonal 1.1/4" With Hole Passante	10
102	5460010004-4	Shaft Clamp Hexagonal 1.1/4" Hole With Thread	10
103	6020310016-0	Hexagonal Head Bolt 1/4" X 3/4" 20F Unc1A Gr5 Rt	20
104	5204060004-3	Deph Shaft Hub	8
105	5080010013-2	Shaft Bushing	8
106	6020011020-2	Retaining Ring E-65	8
107	6020130100-1	Grease Fitting 1/4"	8
108	5204060004-3	Deph Shaft Hub	2
109	5080011046-4	Shaft Bushing	2
110	6020011020-2	Retaining Ring E-65	2
111	6020130100-1	Grease Fitting 1/4"	2

Item	Code	Product description	All
112	5204010312-0	Transmission Hub	2
113	5080010555-0	Bronze Bushing	2
114	5256010114-7	Complete Gear 29/17 Teeth	2
115	5024010374-2	Smooth Washer Ø36 X Ø52 X 1,50Mm(Inox)	2
116	6020010307-9	Retaining Ring E-36	2
117	6020130100-1	Grease Fitting 1/4"	2

• Wheel Support

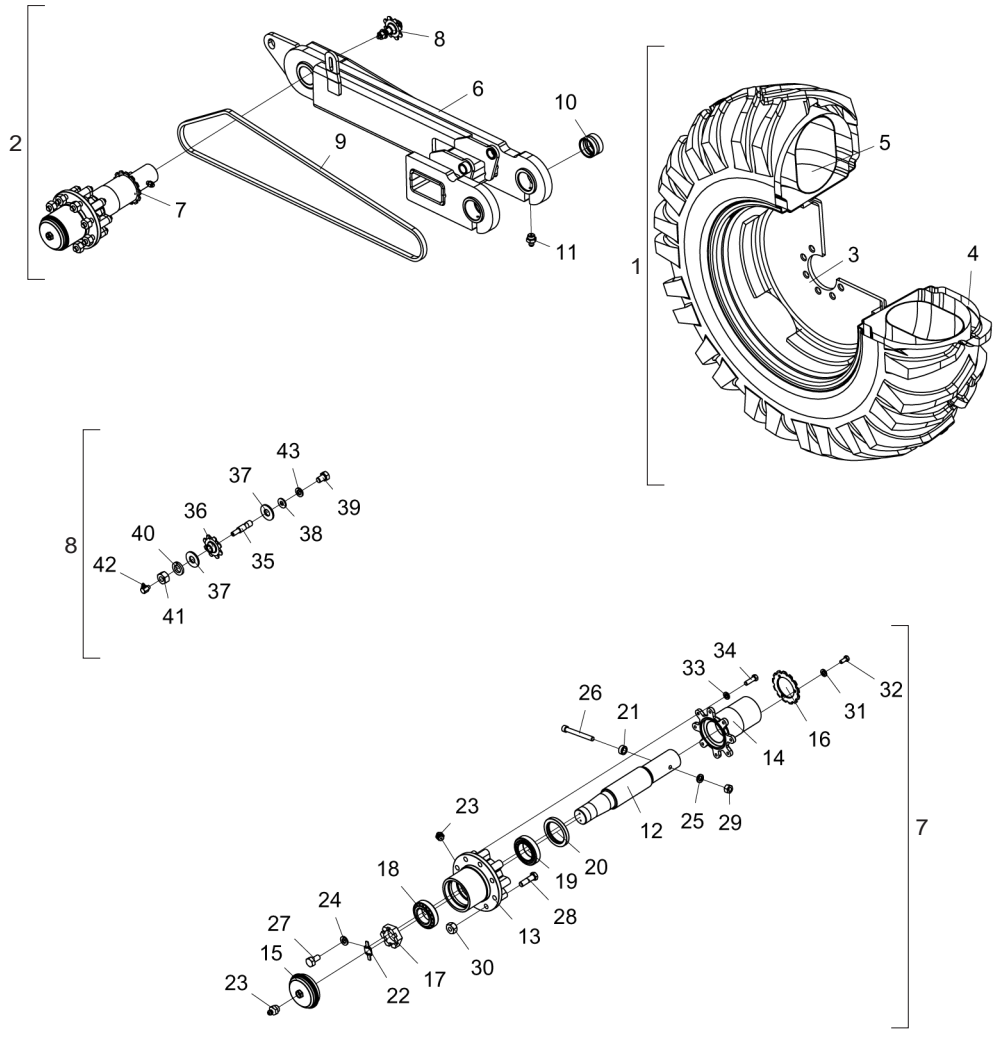

Item	Code	Product description	All
1	5498010160-9	Monunted Right Wheel 18.4-31	1
1	5498010161-7	Mounted Left Wheel 18.4-31	1
2	5530014519-0	Complete Right Lifting Support(Spde-A 7000)	1
2	5530014521-2	Left Support Of Complete Lifiting (Spde-A 7000)	1
3	602035089-75	Wheel W 16,00" X 30" For Tyre 18.4X30"	1
4	6020310379-7	Tyre R1 18.4-30 (467 X 1552 12 Linings)	1
5	6020055249-3	Inner Tube 18.4-30	1
6	5530014520-4	Articulation Left Support(Spde-A 7000)	1
6	5530014522-0	Articulation Left Support(Spde-A 7000)	1
7	5232012434-4	Complete Wheel Shaft	2
8	5268010203-1	Complete Chain Stretcher	2
9	6020059361-0	Chain 2050 Of 89 Links + Amendment	2
10	5080010553-3	Flange Bronze Bushing	4
11	6020130108-7	Grease Fitting 1/8"	4
12	5232011787-9	Wheel Shaft	1
13	5204010470-4	Wheel Hub	1
14	5284010153-3	Flange Of Wheel Hub	1
15	5096010051-1	Hub Cap	1
16	5256010260-7	Gear 14 Teeth With Central Hole Ø86,3Mm	1
17	5456020010-5	Nut 2.1/2" 12F	1
18	6020350855-0	Bearing K-3982 / K-3920 (First Line)	1
19	6020350854-1	Bearing K-33287 / K-33462 (First Line)	1
20	6020350280-2	Retainer Ø87,30 X Ø120,80 X 14,30Mm	1
21	5080020168-0	Bushing Of Ø13,49 X Ø7/8" X 10Mm	1
22	5558010080-4	Lock(Large)	1
23	6020130108-7	Grease Fitting 1/8"	2
24	6020010402-4	Pressure Washer 1/4" Media Industry	2
25	6020010410-5	Pressure Washer 1/2" Media Industry	1
26	6020310116-6	Allen Bolt C/C 1/2" X 4.1/2" 12F W Cl12.9 Rp (Phosphated)	1
27	6020311000-9	Hexagonal Head Bolt 1/4" X 1/2" 20F Unc1A Gr5 Rt	2
28	6020311106-4	Hexagonal Head Bolt 3/4" X 2.3/4" 16F Unf1A Gr5 Rp	8
29	6020310756-3	Hexagonal Nut 1/2" 12F W Gr5 Ch.3/4" Height 11,00Mm	1
30	6020310803-9	Conic Hexagonal Nut 3/4" 16F Unf Gr5 Ch.1.1/2" Height 22,00Mm	8
31	6020010404-0	Pressure Washer 5/16" Media Industry	3
32	6020312020-9	Hexagonal Head Bolt 5/16" X 3/4" 18F Unc1A Gr5 Rt	3
33	6020010406-7	Pressure Washer 3/8" Media Industry	8
34	6020310026-7	Hexagonal Head Bolt 3/8" X 1.1/4" 16F Unc1A Gr5 Rt	8
35	5232010475-0	Stretcher Shaft With Channel And Hole	1
36	5256010084-1	Gear 8 Teeth With Bronze	1
37	5024010239-8	Smooth Washer Ø16,5 X Ø37 X 3,00Mm	2
38	5024010073-5	Smooth Washer Ø8,5 X Ø20 X 2,00Mm	1
39	6020311020-3	Hexagonal Head Bolt 5/16" X 1/2" 18F Unc1A Gr2 Rt	1
40	6020010412-1	Pressure Washer 5/8" Media Industry	1
41	6020310760-1	Hexagonal Nut 5/8" 11F Unc Gr5 Ch.1.1/16" Height 15,00Mm	1
42	6020130106-0	Grease Fitting 1/4"	1
43	6020010404-0	Pressure Washer 5/16" Media Industry	1

• Fertilizer and Seed Hopper SPDE-A (FertiSystem)

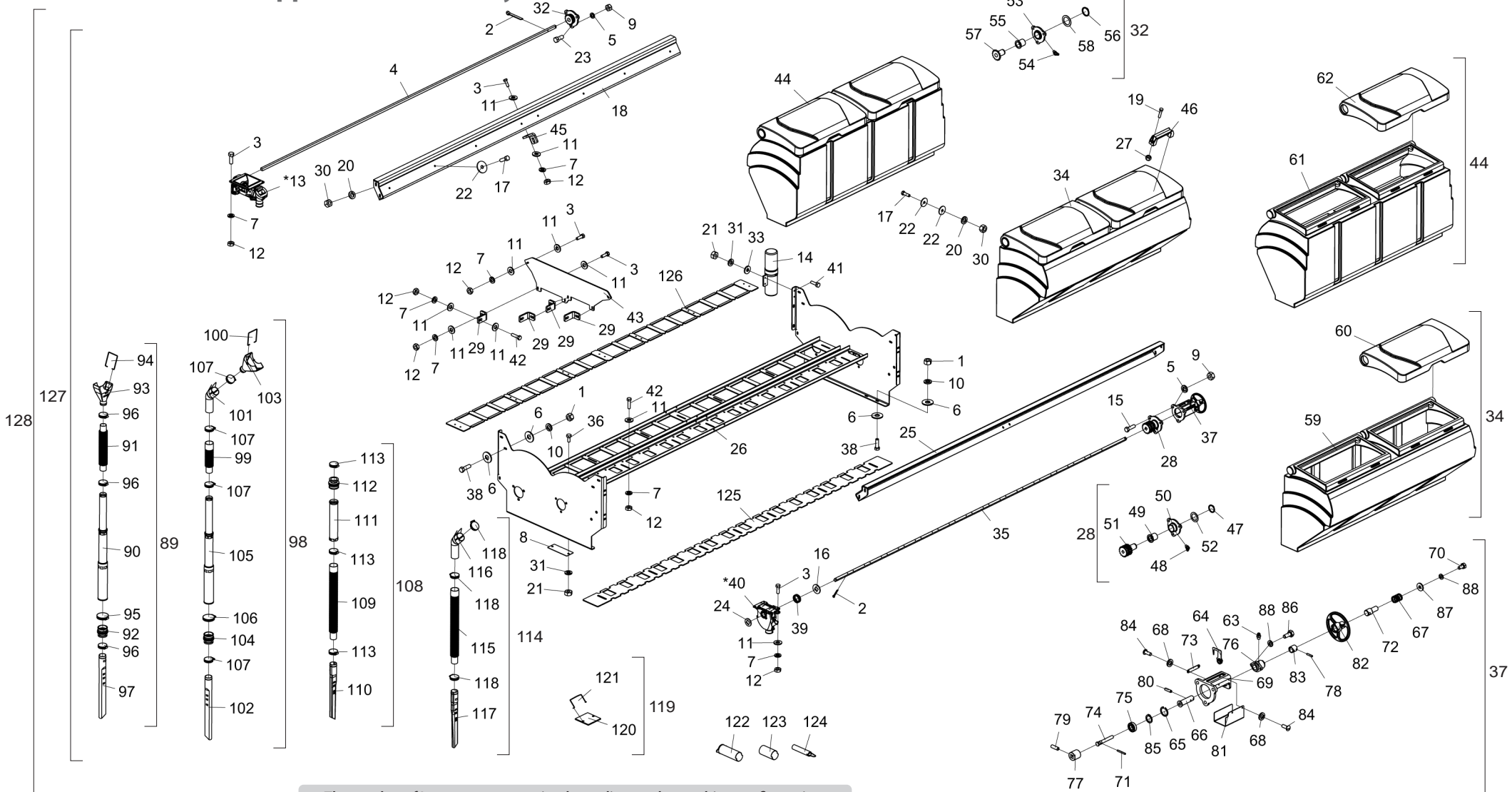

* Item 13 - See page 19

* Item 40 - See page 20

The number of Items 89 to 124 varies depending on the machine configuration.

The Fertilizer and Complete Seed Deposit (128) consists of all the parts listed above. However, when sold complete, Items 89 through 124 will not accompany you.

BALDAN

• Table Fertilizer and Seed Hopper SPDE-A (FertiSystem)

Item	Code	Product description	All
1	6020310746-6	Hexagonal Nut 3/8" 16F Unc Gr5 Ch.9/16" Height 8,50Mm	32
2	6020050101-5	Cotterpin 1/8" X 1"	68
3	6020310883-7	Hexagonal Head Bolt Inox 5/16" X 1" 18F Unc2A Rt	212
4	5232011292-3	Fertilizer Shaft Sq.5/8" X 2860Mm(Spde-A 7000)	2
5	6020010435-0	Pressure Washer Inox 1/2" Media	12
6	5024010075-1	Smooth Washer Ø10,3 X Ø25 X 2,00Mm	64
7	6020010434-2	Pressure Washer Inox 5/16" Media	328
8	5538010600-0	Cover Of 44 X 119 X 1,21Mm	4
9	6020310754-7	Hexagonal Nut 1/2" 12F W Gr5 Ch.7/8" Height 12,00Mm	12
10	6020010406-7	Pressure Washer 3/8" Media Industry	32
11	6020010431-8	Plain Inox Washer Ø8,5 X Ø18 X 1,8Mm	224
12	6020310767-9	Brass Hexagonal Nut 5/16" 18F Unc Ch.1/2" H.6,50Mm	328
*13	6020051126-6	Batcher Kit Fertisystem Auto-Lub Ap/2D Ng Me(Fertisystem 11110000)	32
14	6020050642-4	Container For Instruction Manual	1
15	6020310896-9	Hexagonal Head Bolt Inox 1/2" X 1.3/4" 12F W Rt	6
16	5024010083-2	Smooth Washer Sq.17 X Ø43 X 3,00Mm	32
17	6020310892-6	Hexagonal Head Bolt Inox 3/8" X 1.1/4" 16F Unc2A Rt	56
18	5530014868-8	Hopper Support Of Fertilizer Plastic Box	2
19	6020310894-2	Hexagonal Head Bolt Inox 5/16" X 1.1/2" 18F Unc2A Rt	32
20	6020010436-9	Pressure Washer Inox 3/8" Media	56
21	6020310766-0	Brass Hexagonal Nut 1/4" 20F Unc Ch.7/16" H.5,50Mm	10
22	5024010428-5	Stainless Smooth Washer Of Ø10,50 X Ø40 X 2,50Mm	80
23	6020310885-3	Hexagonal Head Bolt Inox 1/2" X 1.1/4" 12F W Rt	6
24	5024010368-8	Smooth Washer With Square Hole 17 X Ø36 X 2,50Mm	32
25	5530014869-6	Support Of Seed Hopper Plastic Box	2
26	5530015934-5	Support Of Plastic Box(Spdea 7000)	2
27	6020310813-6	Self-Locking Nut With Nylon 5/16" 18F Unc Gr5 Ch.1/2" H.9,00Mm	32
28	5204010383-0	Complete Seed Shaft Hub	2
29	5136015121-6	Large Fixation Plate	8
30	6020310768-7	Brass Hexagonal Nut 3/8" 16F Unc Ch.9/16" H.8,50Mm	56
31	6020010402-4	Pressure Washer 1/4" Media Industry	10
32	5204010311-2	Complete Fertilizer Shaft Hub	2
33	5024010161-8	Smooth Washer Ø7 X Ø18 X 2,00Mm	2
34	6020071648-8	Plastic Seed With Cover (3000)	4
35	5232011849-2	Right Shaft Seed 2830Mm	1
35	5232011850-6	Left Shaft Of Seed 2830Mm	1
36	6020311001-7	Hexagonal Head Bolt 1/4" X 5/8" 20F Unc1A Gr5 Rt	8
37	5484010158-7	Complete Right Seed Of Regulator	1
37	5484010159-5	Complete Left Seed Of Regulator	1
38	6020310026-7	Hexagonal Head Bolt 3/8" X 1.1/4" 16F Unc1A Gr5 Rt	32

Item	Code	Product description	All
39	6020250252-3	Helical Spring Ø23 X Ø28 X 24Mm	32
*40	6020072084-1	Pneumatic Batcher(Nardi-88002843)	32
41	6020311004-1	Hexagonal Head Bolt 1/4" X 7/8" 20F Unc1A Gr5 Rt	2
42	6020310884-5	Hexagonal Head Bolt Inox 5/16" X 1.1/4" 18F Unc2A Rt	56
43	5136015122-4	Central Plate Of Deposit	2
44	6020071646-1	Plastic Fertilizer Hopper With Cover (3000)	4
45	5136015120-8	Small Fixation Plate	4
46	6020010922-0	Nylon Belt Pmc 594 - 132 X 32 Mm	16
47	6020010307-9	Retaining Ring E-36	2
48	6020130104-4	Grease Fitting 1/4"	2
49	5080010552-5	Bronze Bushing	2
50	5204010384-8	Seed Shaft Hub	2
51	5256010101-5	Triple Gear Of Transmission 17 Teeth	2
52	5024010374-2	Smooth Washer Ø36 X Ø52 X 1,50Mm(Inox)	2
53	5204010310-4	Fertilizer Shaft Hub	2
54	6020130104-4	Grease Fitting 1/4"	2
55	5080010548-7	Bronze Bushing	2
56	6020010307-9	Retaining Ring E-36	2
57	5256010109-0	Gear 17 Teeth	2
58	5024010374-2	Smooth Washer Ø36 X Ø52 X 1,50Mm(Inox)	2
59	6020055340-6	Plastic Box For Seed Inteirica 3000 Without Cover	4
60	6020390929-5	Plastic Cover Of Fertilizer/Seed Hopper 3000	4
61	6020055338-4	Plastic Box For Fertilizer Inteirica 3000 Without Cover	4
62	6020390929-5	Plastic Cover Of Fertilizer/Seed Hopper 3000	4
63	6020130100-1	Grease Fitting 1/4"	2
64	5530015670-2	Support Of Regulating Arrow	2
65	6020011054-7	Retaining Ring I-032	2
66	5232011662-7	Seed Regulating Shaft	2
67	6020250577-8	Helical Spring Ø12,5 X Ø16,5 X 19Mm	2
68	6020010400-8	Pressure Washer 3/16" Media Industry	4
69	5530015695-8	Fixation Support Of Regulator	2
70	6020311000-9	Hexagonal Head Bolt 1/4" X 1/2" 20F Unc1A Gr5 Rt	2
71	6020310470-0	Heavy Elastic Pin Ø3 X 24Mm	2
72	5232011663-5	Spring Shaft	2
73	5136015357-0	Plate Of Adjustment Of 50 A 0Mm	2
74	5232011655-4	Seed Regulating Shaft	2
75	6020350887-8	Sphere Rigid Bearing 6002 Zz	2
76	5530015696-6	Fixation Support Of Steering Wheel	2
77	5080011452-4	Bushing Of Regulator Seed	2
78	6020310502-1	Heavy Elastic Pin Ø5 X 24Mm	2

• Table Fertilizer and Seed Hopper SPDE-A (FertiSystem)

Item	Code	Product description	All
79	6020312003-9	Allen Bolt S/C 5/16" X 1" 18F Unc1A Cl12.9 Rt (Phosphated)	2
80	6020312084-5	Heavy Elastic Pin Ø5 X 18Mm	4
81	5464010385-2	Right Protection Of Seed Regulator	1
81	5464010386-0	Left Protection Of Seed Regulator	1
82	5484010160-9	Seed Hopper Regulator	2
83	5080011496-6	Back Bushing	2
84	6020310119-0	Bolt 3/16" X 1/2" 24F Unc1A Gr5 Rt	8
85	6020010250-1	Retaining Oring	2
86	6020311001-7	Hexagonal Head Bolt 1/4" X 5/8" 20F Unc1A Gr5 Rt	4
87	5024010161-8	Smooth Washer Ø7 X Ø18 X 2,00Mm	2
88	6020010402-4	Pressure Washer 1/4" Media Industry	6
89	5150010103-6	Complete Seed Telescopic Conductor(Spde-A)	1
90	6020050666-1	Condutor Telescopico (Ref.260 200 05)	1
91	6020250028-8	Hose Ø38 X Ø38 X 340Mm (Hose 119)	1
92	6020390844-2	Rubber Union Ø41 X Ø54 X 62Mm	1
93	6020190010-0	Funnel Ju-02 (N. 3823)	1
94	6020390309-2	Lock 100 X 84 X 03Mm (2557)	1
95	6020010711-2	Clamp 57-76 Ribbon 13/14Mm	1
96	6020010706-6	Clamp 044 X 057 X 14.5Mm (Carbon Steel)	3
97	6020030671-9	Distributor Funnel 470Mm	1
98	5150010037-4	Sedd Telescopic Conductor W/Complete Extensor(Spd-E)	1
99	6020250483-6	Hose Ø38 X Ø50,8 X 220Mm	1
100	6020390309-2	Lock 100 X 84 X 03Mm (2557)	1
101	5272010014-2	Stension Of Fertilizer/Seed Hose	1
102	6020030671-9	Distributor Funnel 470Mm	1
103	6020190010-0	Funnel Ju-02 (N. 3823)	1
104	6020390844-2	Rubber Union Ø41 X Ø54 X 62Mm	1
105	6020050666-1	Condutor Telescopico (Ref.260 200 05)	1
106	6020010711-2	Clamp 57-76 Ribbon 13/14Mm	1
107	6020010706-6	Clamp 044 X 057 X 14.5Mm (Carbon Steel)	4
108	5150010102-8	Complete Fertilizer Conductor(Spde-A)	1
109	6020250054-7	Rubber Tube Ø38 X Ø50,8 X 555Mm	1
110	6020030672-7	Distributor Funnel 425Mm	1
111	6020390043-3	3° Transparent Telescopic Hose Stage	1
112	6020390844-2	Rubber Union Ø41 X Ø54 X 62Mm	1
113	6020010706-6	Clamp 044 X 057 X 14.5Mm (Carbon Steel)	3
114	5150010044-7	Fertilizer Flexible Conductor W/Extensor Complete(Spde/Spdet)	1
115	6020250054-7	Rubber Tube Ø38 X Ø50,8 X 555Mm	1
116	5272010010-0	Extension Of Seed Hose	1
117	6020030672-7	Distributor Funnel 425Mm	1

Item	Code	Product description	All
118	6020010706-6	Clamp 044 X 057 X 14.5Mm (Carbon Steel)	3
119	5538010244-6	Complete Large Tube (Plastic Box)	1
120	6020390101-4	Cover Of Fertiler Conductor	1
121	6020010924-7	Cover Stics	1
122	6020390093-0	Maintenance Tube	1
123	6020390091-3	Block Tube - "Optional" (07000012)	1
124	6020390092-1	Fixator Tube - "Optional" (300303005)	1
125	5136019654-6	Lateral Plate of Seed Hopper 2870mm	2
126	5136019657-0	Fertilizer Conductor Plate 2870mm	2
127	5208012783-9	Complete Right Fertilizer And Seed Hopper Spdea Plastic Box 7000	1
127	5208012785-5	Complete Left Fertilizer And Seed Hopper Spdea Plastic Box 7000	1
128	5208012782-0	Complete Fertilizer And Seed Hopper Spdea Plastic Box 7000(Conductor	1

BALDAN

• Fertilizer and Seed Hopper SPDE-A (FertiSystem) W/Pasture Seed Hopper

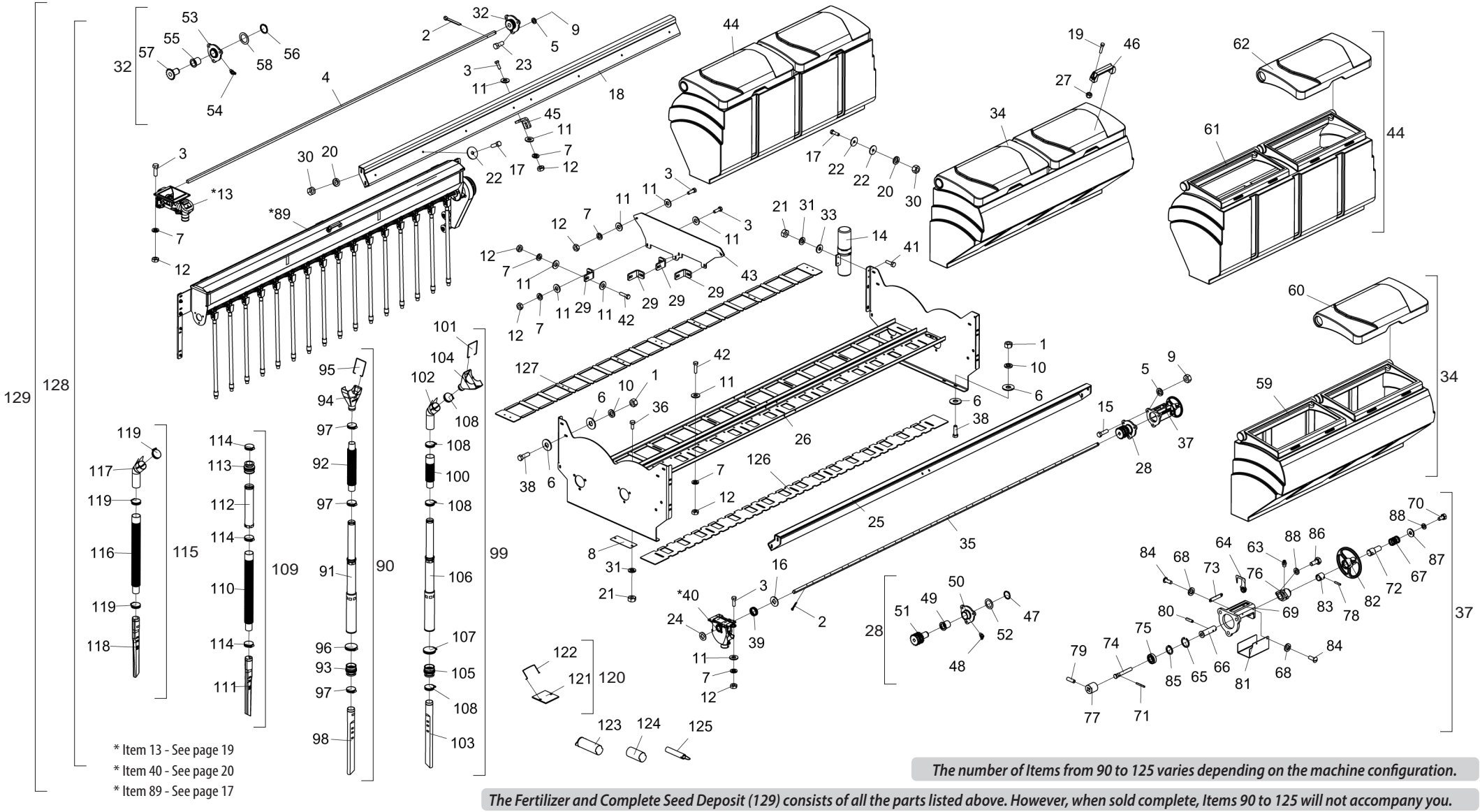

The number of Items from 90 to 125 varies depending on the machine configuration.

The Fertilizer and Complete Seed Deposit (129) consists of all the parts listed above. However, when sold complete, Items 90 to 125 will not accompany you.

• Table Fertilizer and Seed Hopper SPDE-A (FertiSystem) W/Pasture Seed Hopper

Item	Código	Product description	Todos
1	6020310746-6	Hexagonal Nut 3/8" 16F Unc Gr5 Ch.9/16" Height 8,50Mm	32
2	6020050101-5	Cotterpin 1/8" X 1"	68
3	6020310883-7	Hexagonal Head Bolt Inox 5/16" X 1" 18F Unc2A Rt	212
4	5232011292-3	Fertilizer Shaft Sq.5/8" X 2860Mm(Spde-A 7000)	2
5	6020010435-0	Pressure Washer Inox 1/2" Media	12
6	5024010075-1	Smooth Washer Ø10,3 X Ø25 X 2,00Mm	64
7	6020010434-2	Pressure Washer Inox 5/16" Media	328
8	5538010600-0	Cover Of 44 X 119 X 1,21Mm	4
9	6020310754-7	Hexagonal Nut 1/2" 12F W Gr5 Ch.7/8" Height 12,00Mm	12
10	6020010406-7	Pressure Washer 3/8" Media Industry	32
11	6020010431-8	Plain Inox Washer Ø8,5 X Ø18 X 1,8Mm	224
12	6020310767-9	Brass Hexagonal Nut 5/16" 18F Unc Ch.1/2" H.6,50Mm	328
*13	6020051126-6	Batcher Kit Fertisystem Auto-Lub Ap/2D Ng Me(Fertisystem 11110000)	32
14	6020050642-4	Container For Instruction Manual	1
15	6020310896-9	Hexagonal Head Bolt Inox 1/2" X 1.3/4" 12F W Rt	6
16	5024010083-2	Smooth Washer Sq.17 X Ø43 X 3,00Mm	32
17	6020310892-6	Hexagonal Head Bolt Inox 3/8" X 1.1/4" 16F Unc2A Rt	56
18	5530014868-8	Hopper Support Of Fertilizer Plastic Box	2
19	6020310894-2	Hexagonal Head Bolt Inox 5/16" X 1.1/2" 18F Unc2A Rt	32
20	6020010436-9	Pressure Washer Inox 3/8" Media	56
21	6020310766-0	Brass Hexagonal Nut 1/4" 20F Unc Ch.7/16" H.5,50Mm	10
22	5024010428-5	Stainless Smooth Washer Of Ø10,50 X Ø40 X 2,50Mm	80
23	6020310885-3	Hexagonal Head Bolt Inox 1/2" X 1.1/4" 12F W Rt	6
24	5024010368-8	Smooth Washer With Square Hole 17 X Ø36 X 2,50Mm	32
25	5530014869-6	Support Of Seed Hopper Plastic Box	2
26	5530015934-5	Support Of Plastic Box(Spdea 7000)	2
27	6020310813-6	Self-Locking Nut With Nylon 5/16" 18F Unc Gr5 Ch.1/2" H.9,00Mm	32
28	5204010383-0	Complete Seed Shaft Hub	2
29	5136015121-6	Large Fixation Plate	8
30	6020310768-7	Brass Hexagonal Nut 3/8" 16F Unc Ch.9/16" H.8,50Mm	56
31	6020010402-4	Pressure Washer 1/4" Media Industry	10
32	5204010311-2	Complete Fertilizer Shaft Hub	2
33	5024010161-8	Smooth Washer Ø7 X Ø18 X 2,00Mm	2
34	6020071648-8	Plastic Seed With Cover (3000)	4
35	5232011849-2	Right Shaft Seed 2830Mm	1
35	5232011850-6	Left Shaft Of Seed 2830Mm	1
36	6020311001-7	Hexagonal Head Bolt 1/4" X 5/8" 20F Unc1A Gr5 Rt	8
37	5484010158-7	Complete Right Seed Of Regulator	1
37	5484010159-5	Complete Left Seed Of Regulator	1
38	6020310026-7	Hexagonal Head Bolt 3/8" X 1.1/4" 16F Unc1A Gr5 Rt	32
39	6020250252-3	Helical Spring Ø23 X Ø28 X 24Mm	32

Item	Código	Product description	Todos
*40	6020072084-1	Pneumatic Batcher(Nardi-88002843)	32
41	6020311004-1	Hexagonal Head Bolt 1/4" X 7/8" 20F Unc1A Gr5 Rt	2
42	6020310884-5	Hexagonal Head Bolt Inox 5/16" X 1.1/4" 18F Unc2A Rt	56
43	5136015122-4	Central Plate Of Deposit	2
44	6020071646-1	Plastic Fertilizer Hopper With Cover (3000)	4
45	5136015120-8	Small Fixation Plate	4
46	6020010922-0	Nylon Belt Pmc 594 - 132 X 32 Mm	16
47	6020010307-9	Retaining Ring E-36	2
48	6020130104-4	Grease Fitting 1/4"	2
49	5080010552-5	Bronze Bushing	2
50	5204010384-8	Seed Shaft Hub	2
51	5256010101-5	Triple Gear Of Transmission 17 Teeth	2
52	5024010374-2	Smooth Washer Ø36 X Ø52 X 1,50Mm(Inox)	2
53	5204010310-4	Fertilizer Shaft Hub	2
54	6020130104-4	Grease Fitting 1/4"	2
55	5080010548-7	Bronze Bushing	2
56	6020010307-9	Retaining Ring E-36	2
57	5256010109-0	Gear 17 Teeth	2
58	5024010374-2	Smooth Washer Ø36 X Ø52 X 1,50Mm(Inox)	2
59	6020055340-6	Plastic Box For Seed Inteirica 3000 Without Cover	4
60	6020390929-5	Plastic Cover Of Fertilizer/Seed Hopper 3000	4
61	6020055338-4	Plastic Box For Fertilizer Inteirica 3000 Without Cover	4
62	6020390929-5	Plastic Cover Of Fertilizer/Seed Hopper 3000	4
63	6020130100-1	Grease Fitting 1/4"	2
64	5530015670-2	Support Of Regulating Arrow	2
65	6020011054-7	Retaining Ring I-032	2
66	5232011662-7	Seed Regulating Shaft	2
67	6020250577-8	Helical Spring Ø12,5 X Ø16,5 X 19Mm	2
68	6020010400-8	Pressure Washer 3/16" Media Industry	4
69	5530015695-8	Fixation Support Of Regulator	2
70	6020311000-9	Hexagonal Head Bolt 1/4" X 1/2" 20F Unc1A Gr5 Rt	2
71	6020310470-0	Heavy Elastic Pin Ø3 X 24Mm	2
72	5232011663-5	Spring Shaft	2
73	5136015357-0	Plate Of Adjustment Of 50 A 0Mm	2
74	5232011655-4	Seed Regulating Shaft	2
75	6020350887-8	Sphere Rigid Bearing 6002 Zz	2
76	5530015696-6	Fixation Support Of Steering Wheel	2
77	5080011452-4	Bushing Of Regulator Seed	2
78	6020310502-1	Heavy Elastic Pin Ø5 X 24Mm	2
79	6020312003-9	Allen Bolt S/C 5/16" X 1" 18F Unc1A Cl12.9 Rt (Phosphated)	2
80	6020312084-5	Heavy Elastic Pin Ø5 X 18Mm	4

BALDAN

• Table Fertilizer and Seed Hopper SPDE-A (FertiSystem) W/Pasture Seed Hopper

Item	Código	Product description	Todos
81	5464010385-2	Right Protection Of Seed Regulator	1
81	5464010386-0	Left Protection Of Seed Regulator	1
82	5484010160-9	Seed Hopper Regulator	2
83	5080011496-6	Back Bushing	2
84	6020310119-0	Bolt 3/16" X 1/2" 24F Unc1A Gr5 Rt	8
85	6020010250-1	Retaining Oring	2
86	6020311001-7	Hexagonal Head Bolt 1/4" X 5/8" 20F Unc1A Gr5 Rt	4
87	5024010161-8	Smooth Washer Ø7 X Ø18 X 2,00Mm	2
88	6020010402-4	Pressure Washer 1/4" Media Industry	6
*89	5092010423-9	Complete Right Pasture Seed Hopper For Plastic Box(Spdea-7000)	1
*89	5092010425-5	Complete Right Pasture Seed Hopper For Plastic Box(Spdea-7000)	1
90	5150010103-6	Complete Seed Telescopic Conductor(Spde-A)	1
91	6020050666-1	Condutor Telescopico (Ref.260 200 05)	1
92	6020250028-8	Hose Ø38 X Ø38 X 340Mm (Hose 119)	1
93	6020390844-2	Rubber Union Ø41 X Ø54 X 62Mm	1
94	6020190010-0	Funnel Ju-02 (N. 3823)	1
95	6020390309-2	Lock 100 X 84 X 03Mm (2557)	1
96	6020010711-2	Clamp 57-76 Ribbon 13/14Mm	1
97	6020010706-6	Clamp 044 X 057 X 14.5Mm (Carbon Steel)	3
98	6020030671-9	Distributor Funnel 470Mm	1
99	5150010037-4	Sedd Telescopic Conductor W/Complete Extensor(Spd-E)	1
100	6020250483-6	Hose Ø38 X Ø50,8 X 220Mm	1
101	6020390309-2	Lock 100 X 84 X 03Mm (2557)	1
102	5272010014-2	Stension Of Fertilizer/Seed Hose	1
103	6020030671-9	Distributor Funnel 470Mm	1
104	6020190010-0	Funnel Ju-02 (N. 3823)	1
105	6020390844-2	Rubber Union Ø41 X Ø54 X 62Mm	1
106	6020050666-1	Condutor Telescopico (Ref.260 200 05)	1
107	6020010711-2	Clamp 57-76 Ribbon 13/14Mm	1
108	6020010706-6	Clamp 044 X 057 X 14.5Mm (Carbon Steel)	4
109	5150010102-8	Complete Fertilizer Conductor(Spde-A)	1
110	6020250054-7	Rubber Tube Ø38 X Ø50,8 X 555Mm	1
111	6020030672-7	Distributor Funnel 425Mm	1
112	6020390043-3	3° Transparent Telescopic Hose Stage	1
113	6020390844-2	Rubber Union Ø41 X Ø54 X 62Mm	1
114	6020010706-6	Clamp 044 X 057 X 14.5Mm (Carbon Steel)	3
115	5150010044-7	Fertilizer Flexible Conductor W/Extensor Complete(Spde/Spdet)	1
116	6020250054-7	Rubber Tube Ø38 X Ø50,8 X 555Mm	1
117	5272010010-0	Extension Of Seed Hose	1
118	6020030672-7	Distributor Funnel 425Mm	1
119	6020010706-6	Clamp 044 X 057 X 14.5Mm (Carbon Steel)	3
120	5538010244-6	Complete Large Tube (Plastic Box)	1
121	6020390101-4	Cover Of Fertiler Conductor	1
122	6020010924-7	Cover Stics	1
123	6020390093-0	Maintenance Tube	1
124	6020390091-3	Block Tube - "Optional" (07000012)	1
125	6020390092-1	Fixator Tube - "Optional" (300303005)	1
126	5136019654-6	Lateral Plate of Seed Hopper 2870mm	2
127	5136019657-0	Fertilizer Conductor Plate 2870mm	2
128	5208012828-2	Complete Right Fertilizer And Seed Hopper Spdea Plastic Box 7000 With Hopper	1
128	5208012829-0	Complete Left Fertilizer And Seed Hopper Spdea Plastic Box 7000 W/Cx	1
129	5208012827-4	Complete Fertilizer And Seed Hopper Spdea Plastic Box 7000 With Seed Hopper	1

• Pasture Seed Hopper

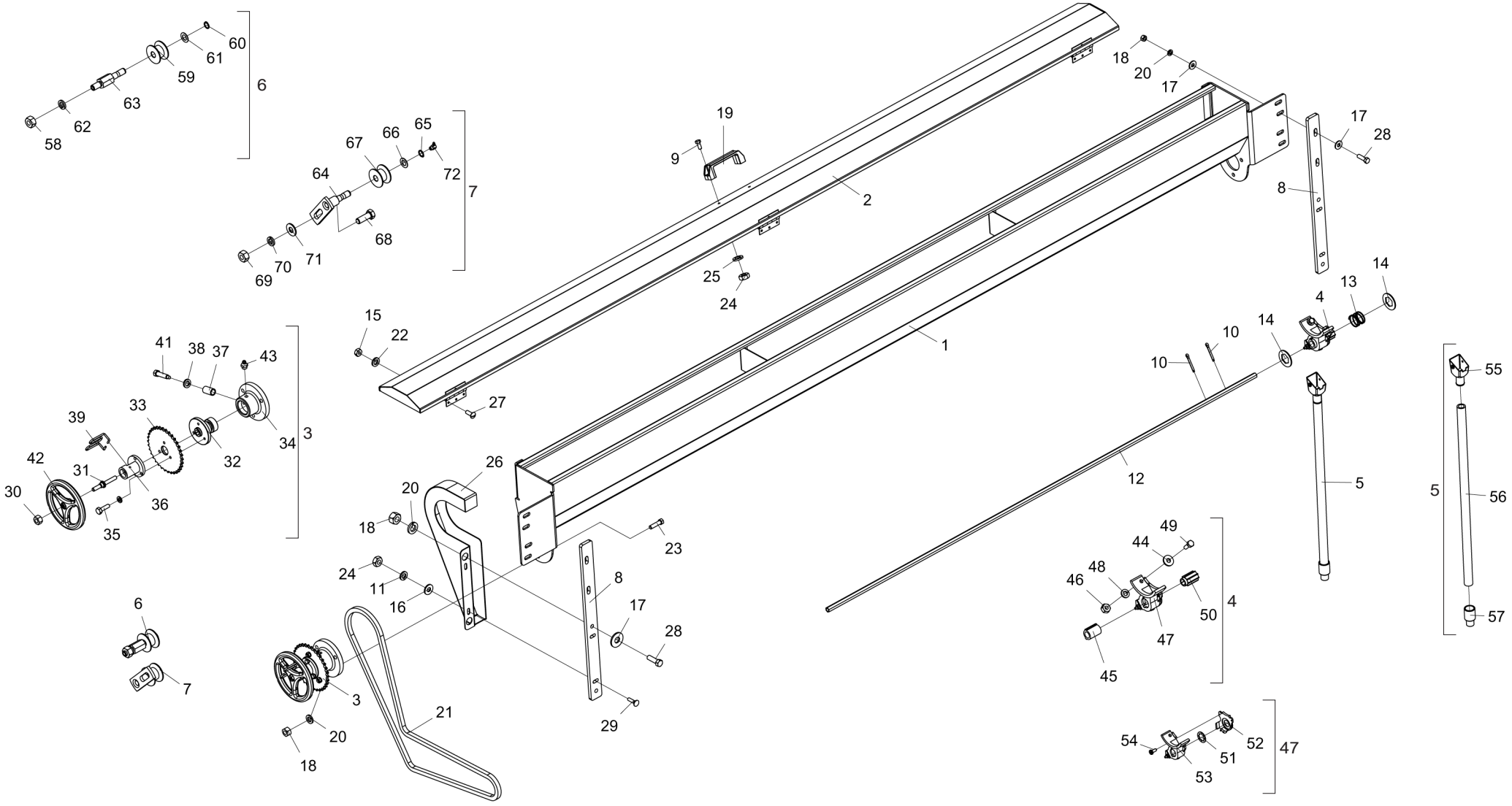

BALDAN

• Table Pasture Seed Hopper

Item	Código	Descrição do Produto	Todos	Direita	Esquerda
1	5092010680-0	Pasture Seed Hopper(Spde-3000)	1		
2	5538015963-4	Cover Of Pasture Seed Hopper (Spde-3000)	1		
3	5484010182-0	Complete Left Regulator		1	
3	5484010181-1	Complete Right Regulator			1
4	5092100006-2	Complete Seed Distributor Box	16		
5	5052030025-0	Complete Funnel Of Pasture Seed Hopper	16		
6	5268010202-3	Complete Chain Stretcher	1		
7	5268010135-3	Complete Chain Stretcher	1		
8	5136014248-9	Fixation Plate Of Pasture Seed Hopper	2		
9	6020310882-9	Hexagonal Head Bolt Inox 5/16" X 3/4" 18F Unc2A Rt	2		
10	6020050101-5	Cotterpin 1/8" X 1"	32		
11	6020010404-0	Pressure Washer 5/16" Media Industry	2		
12	5232011295-8	Right Hexagonal Shaft De 1/2" Pasture Seed Hopper (Spde-A 7000)		1	
12	5232011296-6	Left Hexagonal Shaft De 1/2" Pasture Seed Hopper(Spde-A 7000)			1
13	6020250350-3	Helical Spring Ø16 X Ø18 X 16Mm	16		
14	5024100001-7	Smooth Washer With Hexagonal Hole 13,5 X Ø25 X 1,21Mm	32		
15	6020310740-7	Hexagonal Nut 3/16" 24F Unc Gr5 Ch.3/8" Height 4,50Mm	9		
16	5024010073-5	Smooth Washer Ø8,5 X Ø20 X 2,00Mm	2		
17	5024010075-1	Smooth Washer Ø10,3 X Ø25 X 2,00Mm	12		
18	6020310746-6	Hexagonal Nut 3/8" 16F Unc Gr5 Ch.9/16" Height 8,50Mm	11		
19	6020010922-0	Nylon Belt Pmc 594 - 132 X 32 Mm	1		
20	6020010406-7	Pressure Washer 3/8" Media Industry	11		
21	6020055107-1	Chain (Asa 40) 136 Links + Reduction	1		
22	6020010400-8	Pressure Washer 3/16" Media Industry	9		
23	6020311029-7	Hexagonal Head Bolt 3/8" X 1.1/2" 16F Unc1A Gr5 Rt	3		
24	6020310744-0	Hexagonal Nut 5/16" 18F Unc Gr5 Ch.1/2" Height 6,50Mm	4		
25	6020010434-2	Pressure Washer Inox 5/16" Media	2		
26	5106010104-7	Left Protector Cover		1	
26	5106010103-9	Right Protector Cover			1
27	6020310119-0	Bolt 3/16" X 1/2" 24F Unc1A Gr5 Rt	9		
28	6020310026-7	Hexagonal Head Bolt 3/8" X 1.1/4" 16F Unc1A Gr5 Rt	8		
29	6020312017-9	French Head Bolt 5/16" X 1.1/4" 18F Unc1A Gr2 Rp	2		
30	6020310746-6	Hexagonal Nut 3/8" 16F Unc Gr5 Ch.9/16" Height 8,50Mm	1		
31	5296010009-3	Regulator Spindle Of Shaft (Csf)	1		
32	5204010553-0	Hub W/Hexagonal Hole	1		
33	5256010487-1	Gear 34 Teeths (Ø25,5mm)	1		
34	5204060009-4	Large Left Hub		1	
34	5204060007-8	Large Right Hub			1
35	6020311004-1	Hexagonal Head Bolt 1/4" X 7/8" 20F Unc1A Gr5 Rt	3		
36	5484120001-5	Scale Regulator	1		
37	5080020229-6	Bushing Of Ø14 X Ø19 X 33Mm	1		
38	6020010408-3	Pressure Washer 7/16" Media Industry	1		
39	6020010991-3	Regulator Lock	1		
40	6020010402-4	Pressure Washer 1/4" Media Industry	3		

Item	Código	Descrição do Produto	Todos	Direita	Esquerda
41	6020311040-8	Hexagonal Head Bolt 7/16" X 2" 14F Unc1A Gr5 Rp	1		
42	5484010008-4	Fertilizer / Pasture Seed Hopper Regulator	1		
43	6020130108-7	Grease Fitting 1/8"	1		
44	5024010161-8	Smooth Washer Ø7 X Ø18 X 2,00Mm	32		
45	6020030082-6	Rotor Bushing	16		
46	6020310742-3	Hexagonal Nut 1/4" 20F Unc Gr5 Ch.7/16" Height 5,50Mm	32		
47	6020050420-0	Seed Distributor Box	16		
48	6020010402-4	Pressure Washer 1/4" Media Industry	32		
49	6020311002-5	Hexagonal Head Bolt 1/4" X 3/4" 20F Unc1A Gr2 Rt	32		
50	6020350771-5	Rotor Of Seed Distributor Hopper	16		
51	5024010132-4	Smooth Washer Ø20 X Ø32 X 1,50Mm W/Hole	16		
52	6020390416-1	Cover Of Seed Distributor Cover	16		
53	6020050419-7	Seed Distributor Box	16		
54	6020312404-2	Bolt Ø6,5 X Ø3,2 X 9,5Mm	48		
55	6020030205-5	Plastic Funnel Of Pasture Seed	16		
56	5372050007-4	Hose Ø5/8" X Ø27,5 X 600Mm	16		
57	5080011802-3	Technyl Bushing 50mm	16		
58	6020310760-1	Hexagonal Nut 5/8" 11F Unc Gr5 Ch.1.1/16" Height 15,00Mm	1		
59	6020350849-5	Stretcher Pulley	1		
60	6020010252-8	Retaining Oring	1		
61	5024010059-0	Smooth Washer Ø16,5 X Ø29 X 1,21Mm	1		
62	6020010412-1	Pressure Washer 5/8" Media Industry	1		
63	5232010472-6	Stretcher Shaft Sla 2500	1		
64	5268010132-9	Spare Chain Stretcher	1		
65	6020010252-8	Retaining Oring	1		
66	5024010059-0	Smooth Washer Ø16,5 X Ø29 X 1,21Mm	1		
67	6020350849-5	Stretcher Pulley	1		
68	6020310179-4	Hexagonal Head Bolt 5/8" X 1.3/4" 11F Unc1A Gr5 Rt	1		
69	6020310760-1	Hexagonal Nut 5/8" 11F Unc Gr5 Ch.1.1/16" Height 15,00Mm	1		
70	6020010412-1	Pressure Washer 5/8" Media Industry	1		
71	5024010239-8	Smooth Washer Ø16,5 X Ø37 X 3,00Mm	1		
72	6020130112-5	Grease Fitting 1/8"	1		

• Dosing Set (FertiSystem)

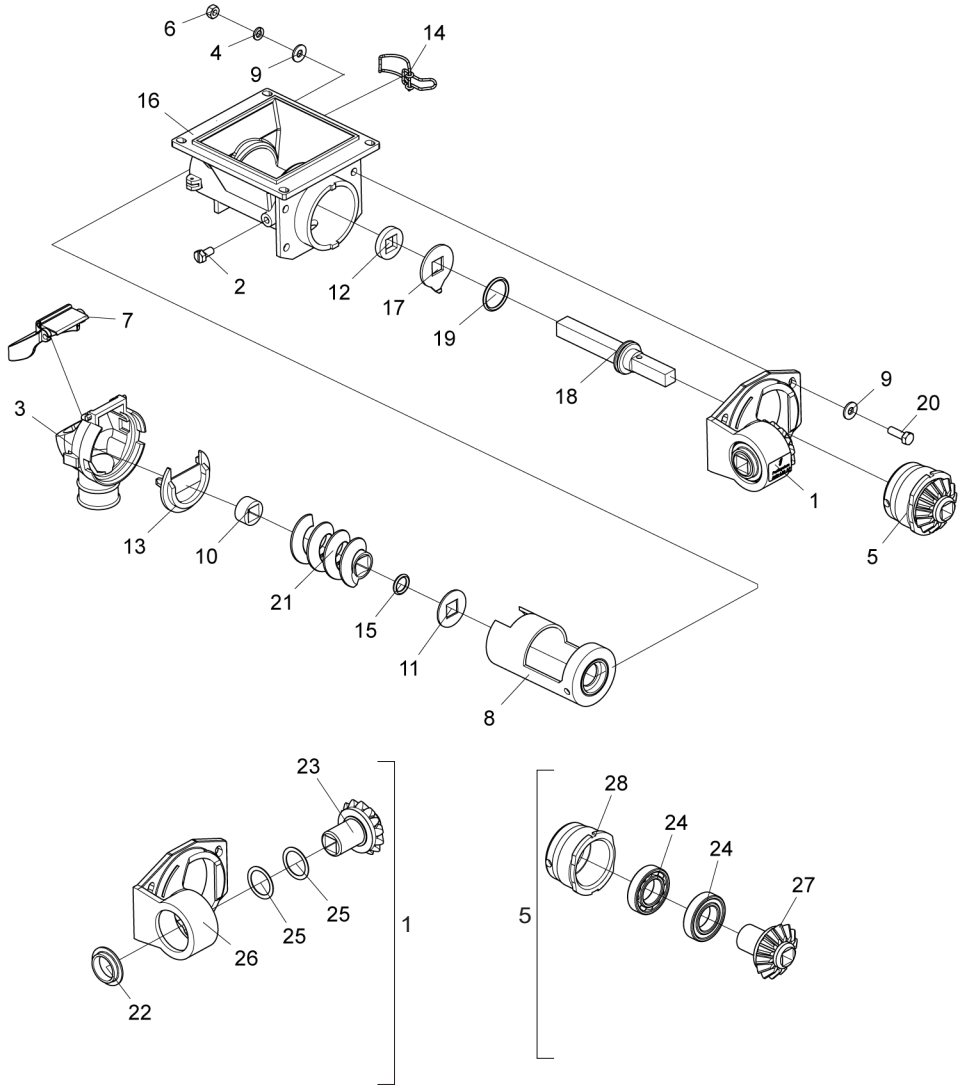

Item	Code	Product description	All	Right	Left
1	6020250494-1	Auto Lub Bearing Set (07100008)	1		
2	6020310295-2	Screw Cab. Hexagonal with Slot M8 x 1.25 x 16mm CL 5.8 Rt	2		
3	6020030302-7	Nozzle (07000002)	1		
4	6020010404-0	Pressure Washer 5/16" Medium Industrial	4		
5	5528011026-3	Internal Bearing System for Fertisystem Conductors (450451001)	1		
6	6020310454-8	Hex Nut M8 x 1.25 MA CL8 Ch.13mm Height.6.5mm	4		
7	6020051127-4	NG Nozzle Cap Set	1		
8	6020350530-5	Coating (07000003)	1		
9	5024010073-5	Flat Washer Ø8.5 x Ø20 x 2.00mm	8		
10	6020010230-7	Ring Lock (07000016)	1		
11	6020010503-9	Square Stainless Steel Washer (07000060)	1		
12	6020110095-2	Felt (07000023)	1		
13	6020390067-0	Cross Cap (07000017)	1		
14	6020310680-0	Clip 0.70mm	2		
15	6020010008-8	O'ring 2-209 N3006-90 NBR (Ø17.04 x Ø3.53mm)	1		
16	6020051128-2	Main Body (07000001)	1		
17	6020010504-7	Washer Cleaner (07000006)	1		
18	6020090686-4	NG Axis(Fertisystem 200201038)	1		
19	6020010041-0	Ring 2-219 N3009-90NBR (32.92)	1		
20	6020310561-7	Screw Cab. Hexagonal M8 x 1.25 x 25mm CL 5.8 Rt	4		
*21	6020370040-0	S 2" Right Worm (Fertisystem 300305002) - Right Worm Thread		1	
*21	6020370258-5	S 2" Left Worm (Fertisystem 300305004) - Left Worm Thread			1
22	6020310604-4	Bearing Protector (07000071)	1		
23	6020310580-3	Pinion Drive (07000072)	1		
24	6020350006-0	Deep Groove Ball Bearing 6006 2RS Ddu	2		
25	5024010243-6	Ø30 x Ø39 x 0.91mm Washer	2		
26	6020250417-8	Auto-Lub Bearing (07000070)	1		
27	6020310909-4	Drive Pinion (Fertisystem 200201036)	1		
28	6020030074-5	Bushing (07000014)	1		

• Seed Dosing

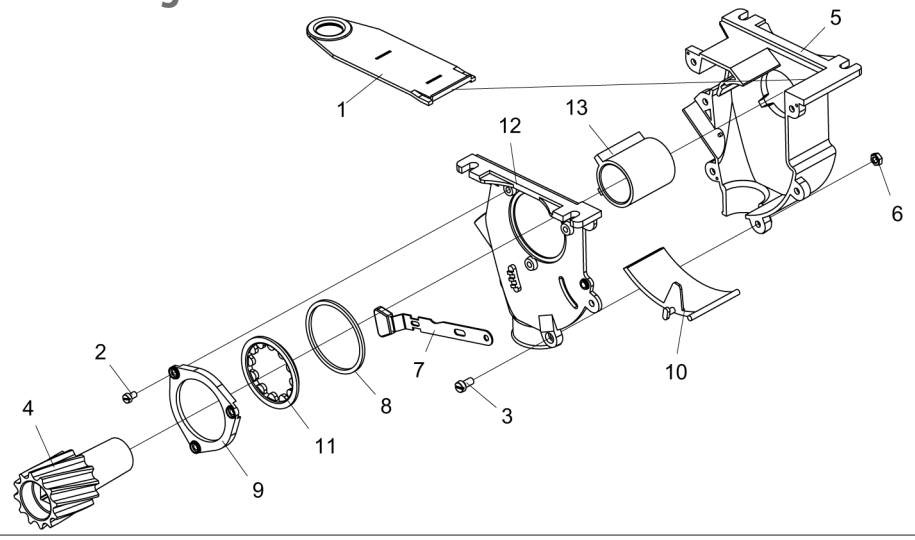

Item	Code	Product description	All
1	6020395083-0	Cover Fertipo (200201023)	1
2	6020317401-5	Bolt M5 X 8mm (Amp 851.013)	3
3	6020317400-7	Bolt M6 X 12mm (Amp 851.009)	6
4	6020350963-7	Rotor (Amp 851.014)	1
5	6020058580-4	Protection Cap (2000) (04.40.00)	1
6	6020317402-3	Hexagonal Nut M6(Amp 851,007)	6
7	6020350965-3	Regulator Of Seed Input (Nardi-11760447)	1
8	6020015940-6	Plastic Ring 0185Mm X 5,00Mm	1
9	6020058578-2	Protection Cap (2000) (04.40.00)	1
10	6020350964-5	Coat (300304002)	1
11	6020015941-4	Cleaning Washer (200201004)	1
12	6020058579-0	Protection Cap (2000) (04.40.00)	1
13	6020030788-0	Bushing (200201010)	1

• Hitch Drawbar

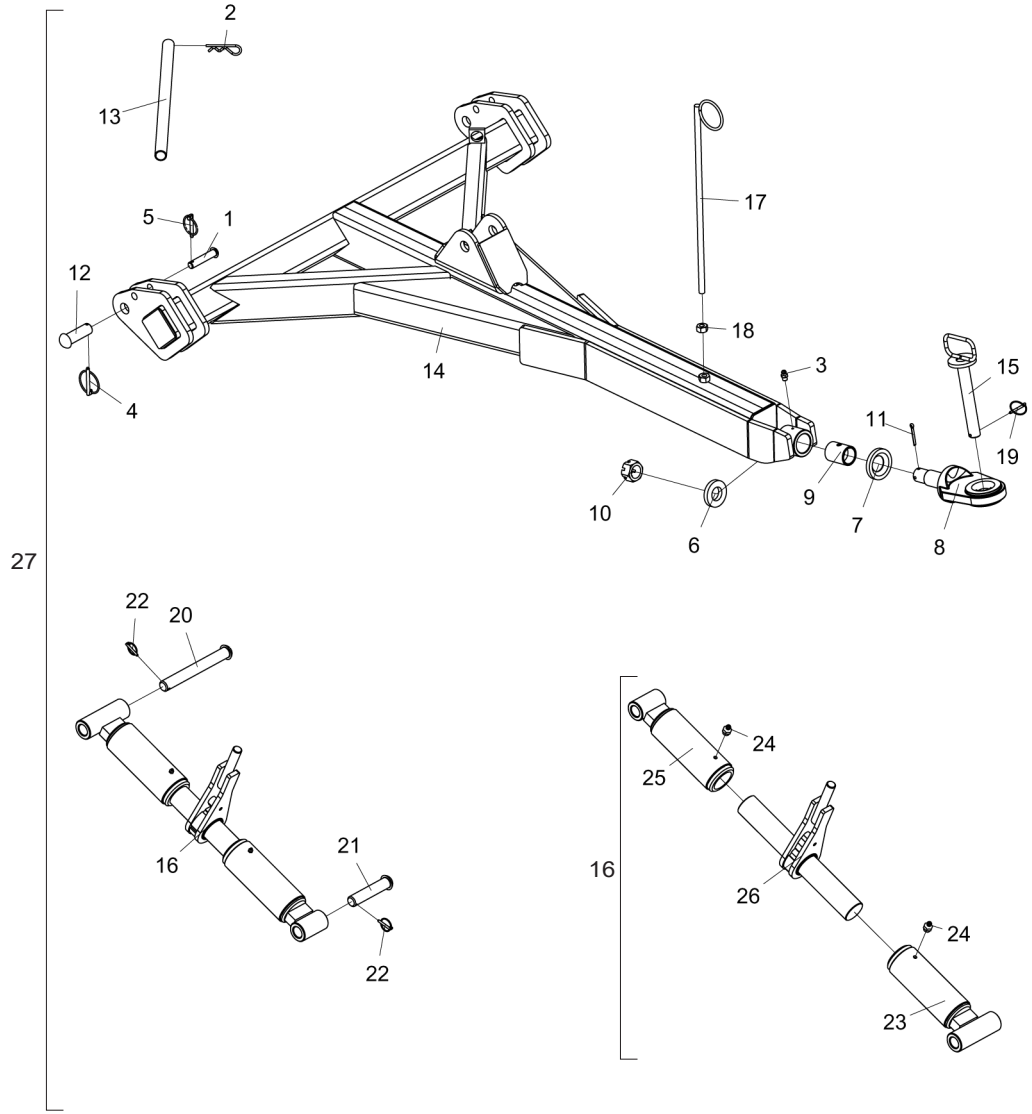

Item	Code	Product description	All
1	5432120028-4	French Head Pin Ø3/4" X 86Mm	2
2	6020390294-0	Lock Nma - Type "R" Ø3,5 X 67Mm(Special)	2
3	6020130100-1	Grease Fitting 1/4"	1
4	6020390301-7	Lock Ø5,75 X 50Mm	2
5	6020390293-2	Lock Ø5,75 X 40Mm	2
6	5024010332-7	Smooth Washer Ø39 X Ø75 X 12,50Mm	1
7	5024010327-0	Smooth Washer Ø45 X Ø87 X 12,00Mm	1
8	5332010018-2	Spare Hitch Shackle	1
9	5080010151-1	Bushing Of Drawbar	1
10	6020310857-8	Nut 1.1/2" 12F Unf Gr2 Ch.2" Height 30,00Mm	1
11	6020050116-3	Cotterpin 1/4" X 2"	1
12	6020310665-6	French Head Pin Ø30,53 X 85mm	2
13	5552010178-0	Tube Of Ø26,8 X Ø32 X 600Mm	1
14	5084010196-4	Hitch Drawbar(Spde-A)	1
15	5432010025-1	Pin Ø1.1/4" X 215Mm	1
16	5484010048-3	Regulator 3ºpoint Complete	1
17	5530060020-3	Hoses Support	1
18	6020310760-1	Hexagonal Nut 5/8" 11F Unc Gr5 Ch.1.1/16" Height 15,00Mm	1
19	6020390301-7	Lock Ø5,75 X 50Mm	1
20	5432010259-9	French Head Pin Ø30,53 X 240Mm	1
21	5432120031-4	French Head Pin Ø30,53 X 135Mm	1
22	6020390293-2	Lock Ø5,75 X 40Mm	2
23	5484010046-7	Right Regulator 3ºpoint	1
24	6020130108-7	Grease Fitting 1/8"	2
25	5484010047-5	Left Regulator 3º Point	1
26	5232010530-7	Complete Regulator Shaft Of 3 Point	1
27	5084010195-6	Complete Hitch Drawbar(Spde-A)	1

The Complete Hitch Drawbar (27) consists of all the parts listed above. However, when sold complete, Items 9 to 15 will not accompany you.

• Hydraulic System W/Distribuitor for Double Control Withoit Row Marker

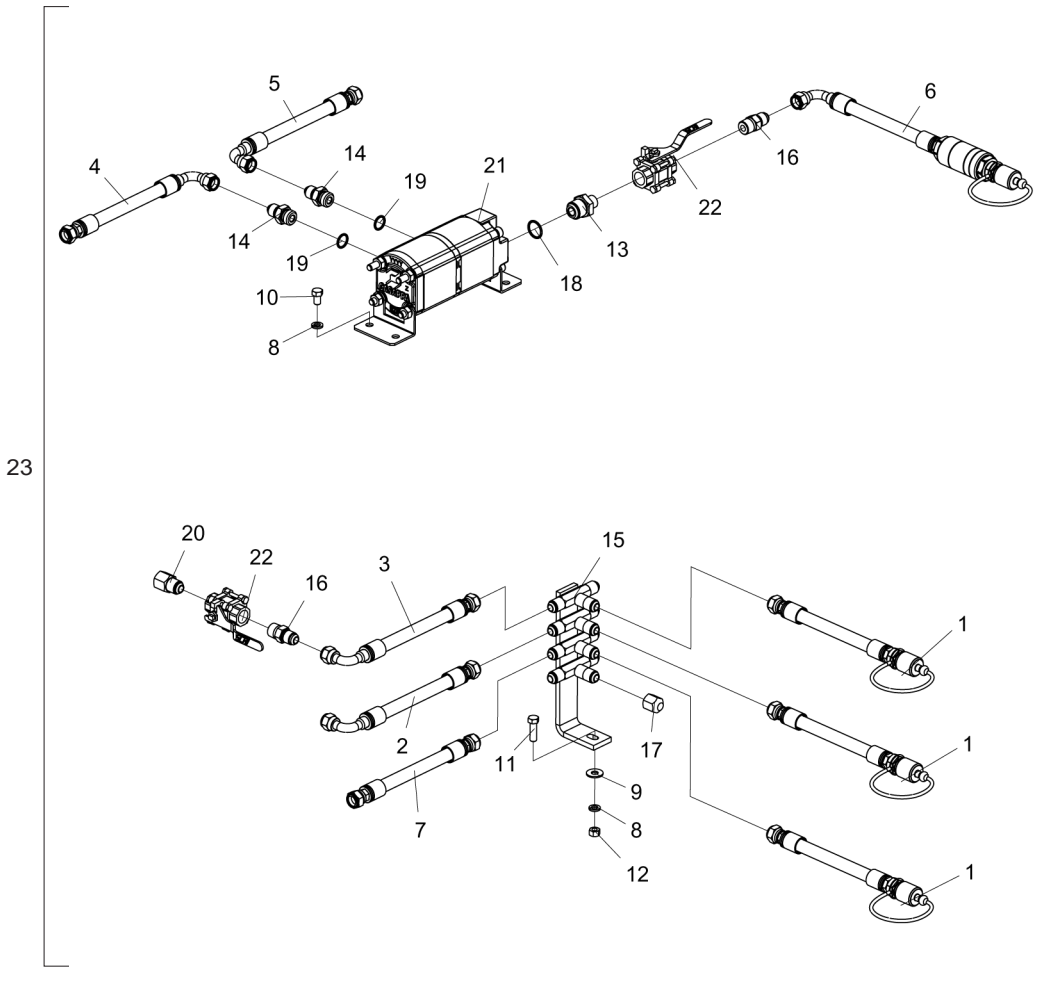

Item	Code	Product description	All
1	5372011092-6	Hose Ø3/8" X 3000mm With 1Trg And 1Trf With Male Quickly Coupling	3
2	6020250941-2	High Pressure Hydraulic Hose 3/8" X 1400mm With 1Tcg And 1Trg (Sae 100R2 At -	2
3	6020250936-6	High Pressure Hydraulic Hose 3/8" X 1800mm With 1Tcg And 1Trg (Sae 100R2 At -	2
4	6020250918-8	High Pressure Hydraulic Hose 3/8" X 3200mm With 1Tcg 90º And 1Trg (Sae 100R2 At -	1
5	6020250878-5	High Pressure Hydraulic Hose 3/8" X 3800mm With 1Tcg And 1Trg (Sae 100R2 At -	1
6	5372011059-4	Hose Ø3/8" X 3000mm With 1Tcg And 1Trf W/Filtro And Engate Rapido Macho	1
7	6020250843-2	High Pressure Hydraulic Hose 3/8" X 4000mm With 2Trg (Sae 100R2 At - P.T.4800Psi)	2
8	6020010406-7	Pressure Washer 3/8" Media Industry	5
9	5024010075-1	Smooth Washer Ø10,3 X Ø25 X 2,00mm	1
10	6020311030-0	Hexagonal Head Bolt 3/8" X 5/8" 16F Unc1A Gr2 Rt	4
11	6020310026-7	Hexagonal Head Bolt 3/8" X 1.1/4" 16F Unc1A Gr5 Rt	1
12	6020310746-6	Hexagonal Nut 3/8" 16F Unc Gr5 Ch.9/16" Height 8,50mm	1
13	5412010132-6	Nipple R.1.1/16" Un X R.1/2" Npt X 48mm Hexagonal 1.1/4"	1
14	5412010088-5	Nipple R.7/8" Unf X R.3/4" Unf X 47mm With Hexagonal 1"	2
15	5224010100-9	Oil Distributor	1
16	5412010099-0	Nipple R.1/2" Npt X R.3/4" Unf X 50mm With Hexagonal 7/8"	3
17	5538010158-0	Cover Of Nipple R.3/4" Unf	3
18	6020010024-0	O´Ring 2-119 N3006-90Nbr (23,47)	1
19	6020010060-6	O´Ring 6-040 N3006-90Nbr (18,00)	2
20	5412010104-0	Nipple R.1/2"(G) X 3/4" Unf X 45mm With Hexagonal 1"	2
21	6020430283-1	Rotating Flow Divider Valve Of Gears Pld20/2/Cs-Od/16-Oc/16-	1
22	6020430194-0	Sphere Valve 1/2" Npt Stauff:Bbvm20080200M / Gemels 1111Ab-	3
23	5528010619-3	Hydraulic System W/Distributor For Double Command Without Row Marker	1

• Hydraulic System SPDE-A W/Row Marker

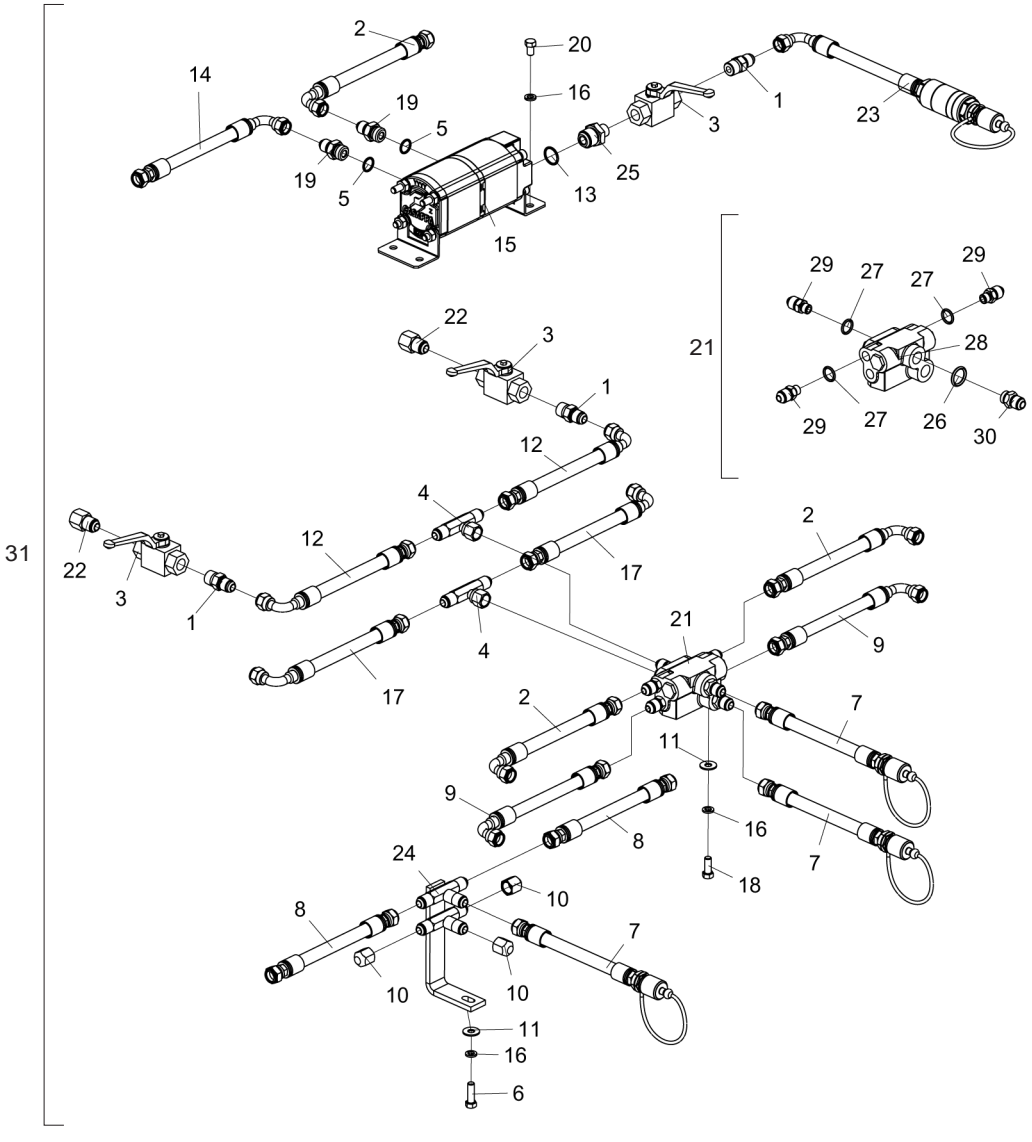

Item	Code	Product description	All
1	5412010099-0	Nipple R.1/2" Npt X R.3/4" Unf X 50mm With Hexagonal 7/8"	3
2	6020250878-5	High Pressure Hydraulic Hose 3/8" X 3800mm With 1Tcg And 1Trg (Sae 100R2 At -	3
3	6020430194-0	Sphere Valve 1/2" Npt Stauff:Bbvm20080200M / Gemels 1111Ab-	3
4	5412050020-4	"T" Nipple	2
5	6020010060-6	O´Ring 6-040 N3006-90Nbr (18,00)	2
6	6020310026-7	Hexagonal Head Bolt 3/8" X 1.1/4" 16F Unc1A Gr5 Rt	1
7	5372011092-6	Hose Ø3/8" X 3000mm With 1Trg And 1Trf With Male Quickly Coupling	3
8	6020250843-2	High Pressure Hydraulic Hose 3/8" X 4000mm With 2Trg (Sae 100R2 At - P.T.4800Psi)	2
9	6020250870-0	High Pressure Hydraulic Hose 3/8" X 4100mm With 1Tcg 90º And 1Trg (Sae 100R2 At -	2
10	5538010158-0	Cover Of Nipple R.3/4" Unf	3
11	5024010075-1	Smooth Washer Ø10,3 X Ø25 X 2,00mm	2
12	6020250936-6	High Pressure Hydraulic Hose 3/8" X 1800mm With 1Tcg And 1Trg (Sae 100R2 At -	2
13	6020010024-0	O´Ring 2-119 N3006-90Nbr (23,47)	1
14	6020250918-8	High Pressure Hydraulic Hose 3/8" X 3200mm With 1Tcg 90º And 1Trg (Sae 100R2 At -	1
15	6020430283-1	Rotating Flow Divider Valve Of Gears Pld20/2/Cs-Od/16-Oc/16-	1
16	6020010406-7	Pressure Washer 3/8" Media Industry	6
17	6020250941-2	High Pressure Hydraulic Hose 3/8" X 1400mm With 1Tcg And 1Trg (Sae 100R2 At -	2
18	6020310021-6	Hexagonal Head Bolt 3/8" X 1" 16F Unc1A Gr5 Rt	1
19	5412010088-5	Nipple R.7/8" Unf X R.3/4" Unf X 47mm With Hexagonal 1"	2
20	6020311030-0	Hexagonal Head Bolt 3/8" X 5/8" 16F Unc1A Gr2 Rt	4
21	5224010104-1	Complete Oil Distributor With 8 Nipples	1
22	5412010104-0	Nipple R.1/2"(G) X 3/4" Unf X 45mm With Hexagonal 1"	2
23	5372011059-4	Hose Ø3/8" X 3000mm With 1Tcg And 1Trf W/Filtro And Engate Rapido Macho	1
24	5224010022-3	Oil Distributor	1
25	5412010132-6	Nipple R.1.1/16" Un X R.1/2" Npt X 48mm Hexagonal 1.1/4"	1
26	6020010022-3	O´Ring 2-114 N3006-90Nbr (15,54)	2
27	6020010025-8	O´Ring 6-091 N3006-90Nbr(Ø12,00 X 2,00mm)	6
28	6020430196-7	Valve Block	1
29	5412010008-7	Nipple R.3/4" Unf X R.9/16" Unf X 40mm With Hexagonal 3/4"	6
30	5412010035-4	Nipple R.3/4" Unf X R.3/4" Unf X 38mm With Hexagonal 7/8"	2
31	5528010623-1	Hydraulic System W/Marker (SPDEA 7000)	1

• Complete Row Marker

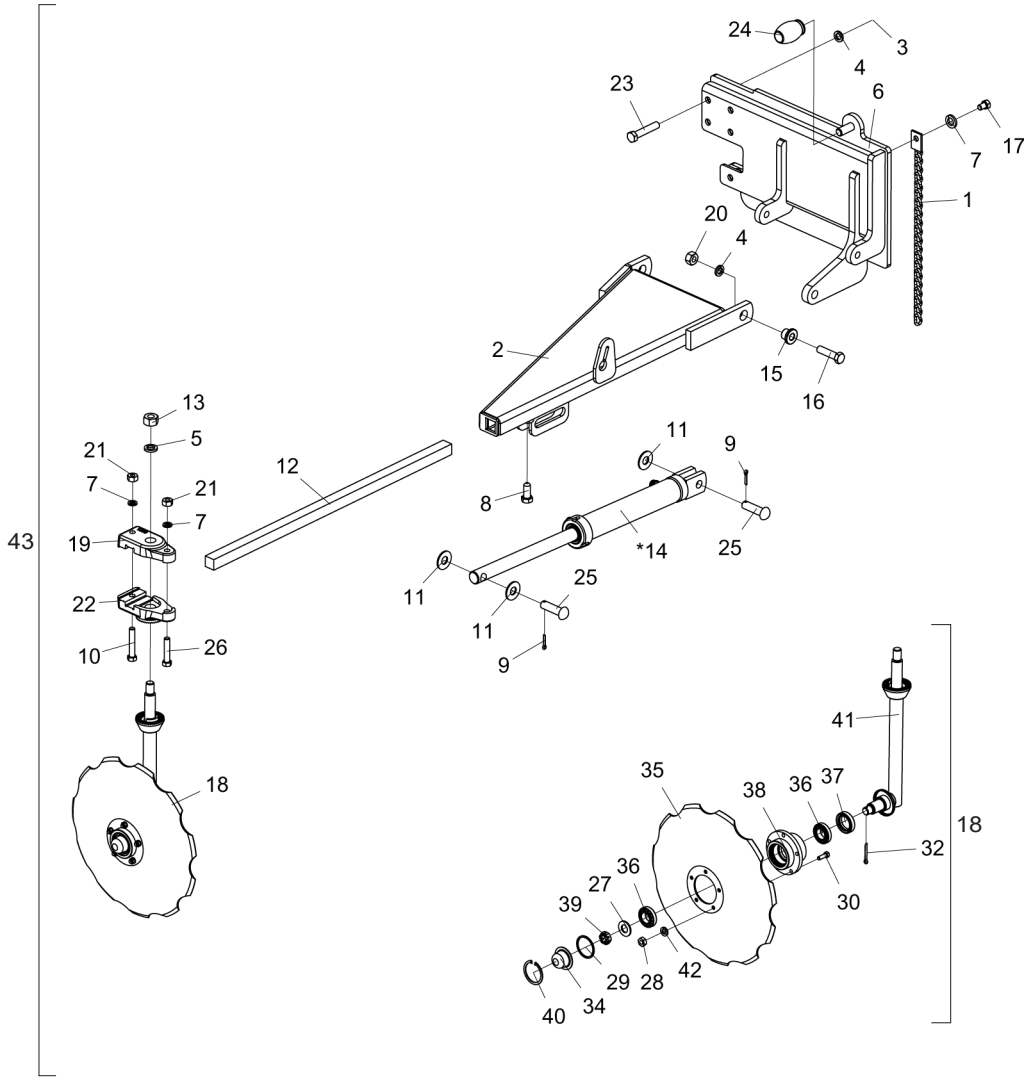

Item	Code	Product description	All	Right	Left
1	5192010046-9	Complete Chain De 05,5Mm 510Mm Cpl	1		
2	5036010095-0	Right Row Marker Of Front Marker		1	
2	5036010094-1	Left Row Marker Of Front Marker			1
3	6020310762-8	Hexagonal Nut 5/8" 18F Unf Gr5 Ch.15/16" Height 15,00Mm	5		
4	6020010412-1	Pressure Washer 5/8" Media Industry	7		
5	6020010414-8	Pressure Washer 3/4" Media Industry	1		
6	5530011931-9	Fixation Right Support Of Marker		1	
6	5530011932-7	Fixation Left Support Of Marker			1
7	6020010410-5	Pressure Washer 1/2" Media Industry	3		
8	6020312082-9	Hexagonal Head Bolt 5/8" X 1.1/2" 11F Unc1A Gr5 Rt	1		
9	6020050104-0	Cotterpin 3/16" X 1"	2		
10	6020311057-2	Hexagonal Head Bolt 1/2" X 3" 12F W Gr5 Rp	1		
11	5024010142-1	Smooth Washer Ø20,3 X Ø46,5 X 3,00Mm	3		
12	5040080019-4	Square Bar De 1.1/8" X 830Mm	1		
13	6020310770-9	Hexagonal Nut 3/4" 10F Unc Gr5 Ch.1.7/32" Height 18,50Mm	1		
*14	6020055698-7	Hydraulic Cylinder "O.D" Ø1.1/4" X Ø2" X 246Mm(Course) X 499Mm(Closed)	1		
15	5080010407-3	Bushing Of Ø16,2 X Ø1.1/2" X 24Mm	2		
16	6020311075-0	Hexagonal Head Bolt 5/8" X 2.1/4" 11F Unc1A Gr5 Rp	2		
17	6020311046-7	Hexagonal Head Bolt 1/2" X 3/4" 12F W Gr2 Rt	1		
18	5386010138-2	Row Marker		1	
18	5386010139-0	Row Marker			1
19	6010601393-7	Lower Rosette Of Row Marker	1		
20	6020310760-1	Hexagonal Nut 5/8" 11F Unc Gr5 Ch.1.1/16" Height 15,00Mm	2		
21	6020310754-7	Hexagonal Nut 1/2" 12F W Gr5 Ch.7/8" Height 12,00Mm	2		
22	6010601392-9	Upper Rosette Of Row Marker	1		
23	6020310438-6	Hexagonal Head Bolt 5/8" X 3.1/4" 18F Unf1A Gr5 Rp	5		
24	6020030170-9	Stop Furrower 85.991.00	1		
25	6020310597-8	Pin Ø3/4" X 62mm	2		
26	6020312060-8	Hexagonal Head Bolt 1/2" X 2.1/4" 12F W Gr5 Rp	1		
27	5024010258-4	Smooth Washer Ø20 X Ø38,5 X 3,00Mm	1		
28	6020310744-0	Hexagonal Nut 5/16" 18F Unc Gr5 Ch.1/2" Height 6,50Mm	5		
29	6020010130-0	Gascket Ring 050 X 057 X 2Mm	1		
30	6020310038-0	Hexagonal Head Bolt 5/16" X 1" 18F Unc1A Gr5 Rt	5		
32	6020050101-5	Cotterpin 1/8" X 1"	1		
34	6020050649-1	Hub Cap (External Diameter 57,00Mm)	1		
35	2759366580-7	Concave Notched Disc Blade 16 X 3,50 Hc Rd 74Mm + 5H Rd 8,7Mm R=48Mm Single Bevel	1		
36	6020350077-0	Bearing 44610/49	2		
37	6020350268-3	Retainer Ø36,00 X Ø52,00 X 11,00Mm	1		
38	5204010247-7	Disc Hub	1		
39	6020310797-0	Nut 3/4" 16F Unf Gr5 Ch.1.1/16" Height 13,00Mm	1		
40	6020011025-3	Retaining Ring I-058	1		
41	5386010142-0	Row Marker		1	
41	5386010141-2	Row Marker			1
42	6020010404-0	Pressure Washer 5/16" Media Industry	5		
43	5386010183-8	Complete Row Marker Spe 4000		1	
43	5386010182-0	Complete Row Marker Spe 4000			1

* Item 14 - See page 26

• Central Line Articulation Cylinder

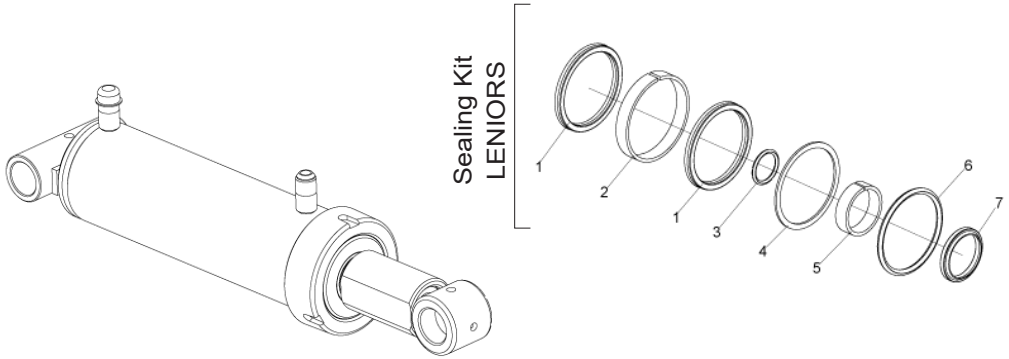

Item	Code	Product description	All
		Sealing Kit LENIORS	
1	J010510	Gasket Std 2500-2750	2
2		Guide Ring W2-3250-500	1
3		Ring O´Ring 2-126	1
4		Parback 8-336	1
5		Guide Ring 6W8-1875-495	1
6		Ring O´Ring 2-336 (Ø72,39 x Ø5,33mm)	1
7		Cleaner D-1625	1
-	6020190198-0	Repair Game Leniors J010510	1

For replacement parts, please check the cylinder liner - Baldan code, manufacturer code and name and manufacturing date.

• Wheel Articulation Side Cylinder

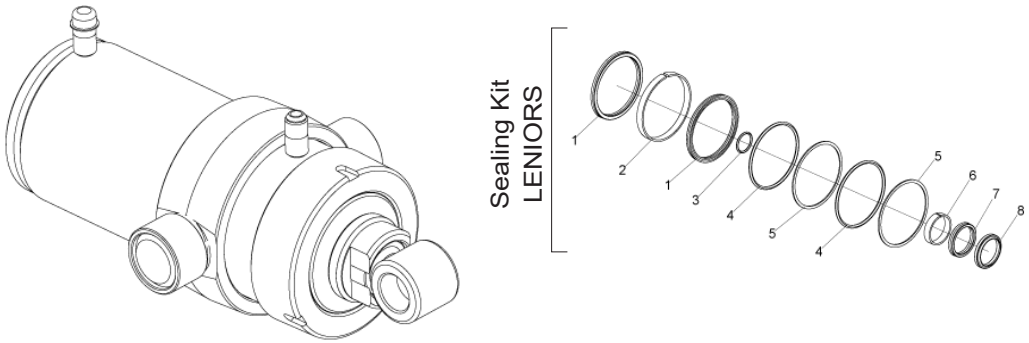

Item	Code	Product description	All
		Sealing Kit LENIORS	
1	J008170	Gasket Std 3750-4250	2
2		Guide Ring W2-5000-500 (Ø5" x 1/2")	1
3		Ring O´Ring 2-125	1
4		Ring O´Ring 2-350 (Ø116,84 x Ø5,33mm)	2
5		Parback 8-350	2
6		Guide Ring W2-2250-500 (Ø2.1/4" x 1/2")	1
7		Gasket B 2500-2000-375B (Ø2xØ2-1-2x3-8)	1
8		Cleaner D-2000	1
-	6020190212-9	Repair Game Leniors J008170	1

For replacement parts, please check the cylinder liner - Baldan code, manufacturer code and name and manufacturing date.

• Line Marker Cylinder

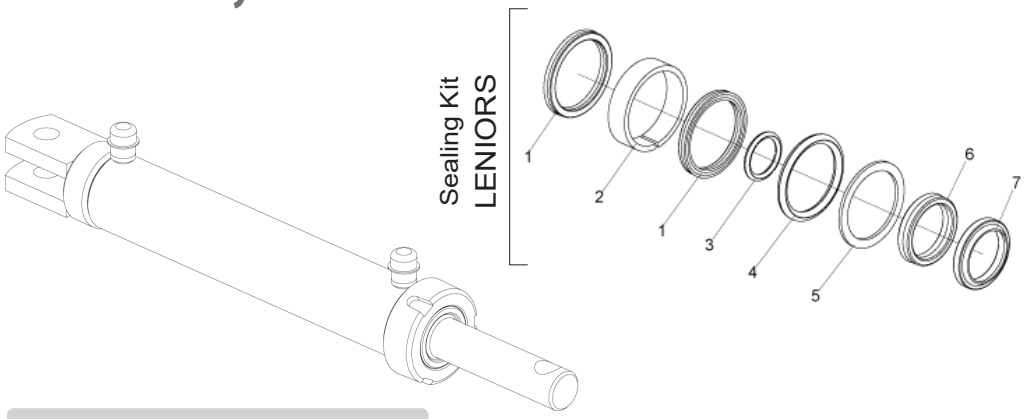

Item	Code	Product description	All
		Sealing Kit LENIORS	
1	J003567	Gasket Std 1870-1625	2
2		Guide Ring W2-2000-500 (Ø2" x 1/2")	1
3		Ring O´Ring 2-126 (Ø21,82 x Ø3,53mm)	1
4		Ring O´Ring 2-326 (Ø40,64 x Ø5,33mm)	1
5		Parback 8-326	1
6		Gasket B 1870-1250-312B	1
7		Cleaner D-1250 (1-1/4" x 1-5/8" x 3/16")	1
-	6020190184-0	Repair Game Leniors J003567	1

For replacement parts, please check the cylinder liner - Baldan code, manufacturer code and name and manufacturing date.

• Side Transport Assembly Cylinder

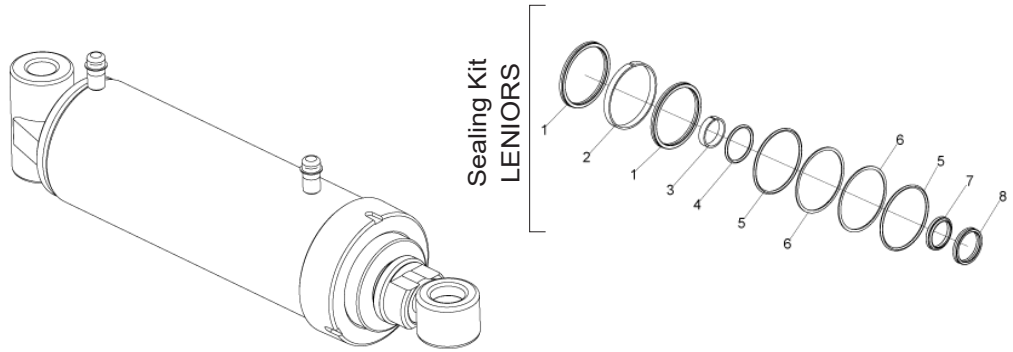

Item	Code	Product description	All
		Sealing Kit LENIORS	
1	J008276	Gasket Std 3750-4250	2
2		Guide Ring W2-5000-500 (Ø5" x 1/2")	1
3		Guide Ring W2-2250-500 (Ø2.1/4" x 1/2")	1
4		Ring O´Ring 2-226	1
5		Ring O´Ring 2-350	2
6		Parback 8-350 (Ø116,84 x Ø5,33mm)	2
7		Cleaner D-2000	1
8		Gasket B 2500-200-375B (Ø2xØ2-1-2x3-8)	1
-	6020190213-7	Repair Game Leniors J008276	1

For replacement parts, please check the cylinder liner - Baldan code, manufacturer code and name and manufacturing date.

• Speed Box

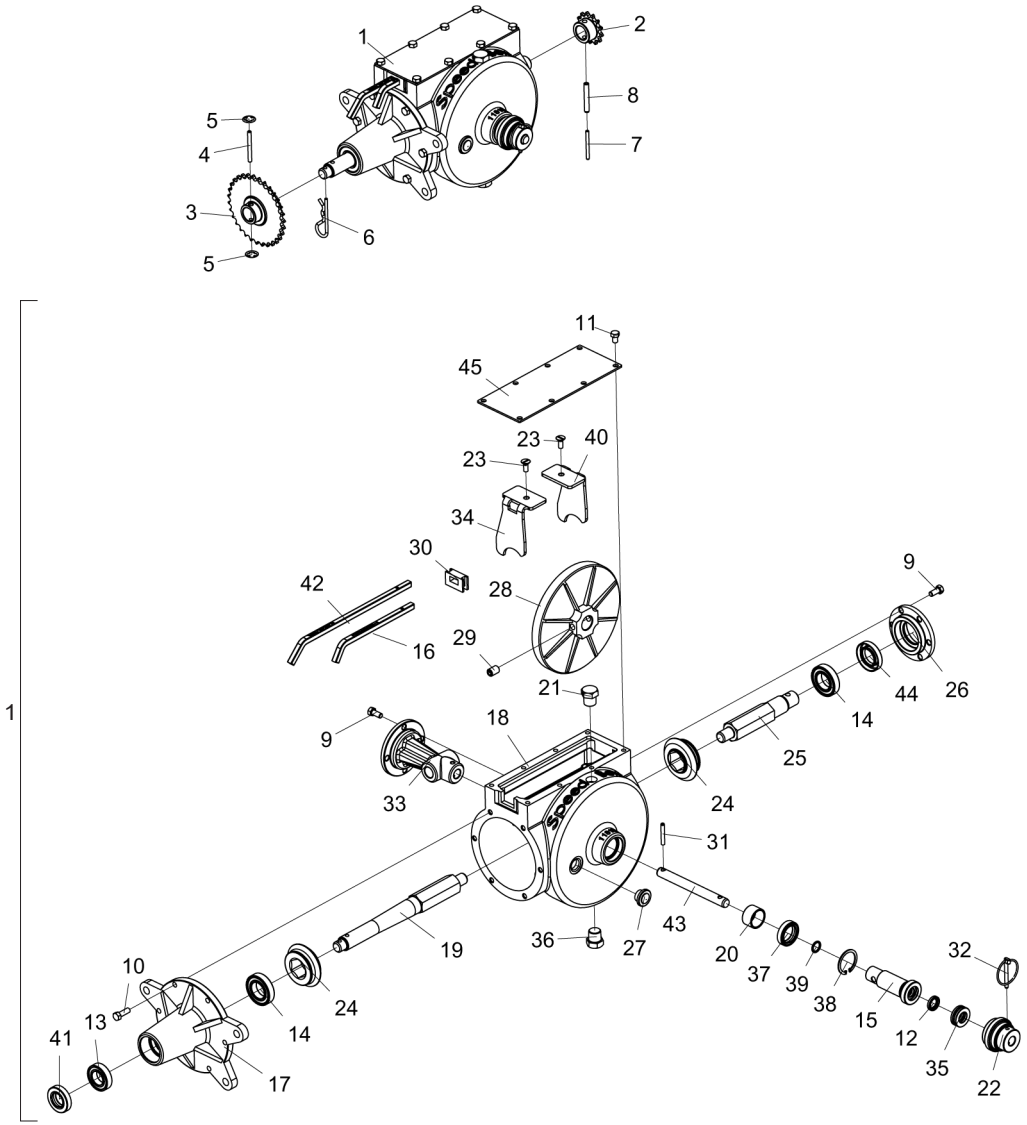

Item	Code	Product description	All
1	5092010205-8	Complete Right Speed Box	1
1	5092010206-6	Complete Left Speed Box	1
2	5256010509-6	Gear 13 Teeths	1
3	5256010054-0	Complete Gear 20/31 Teeth	1
4	5432010040-5	Fuse Pin Ø6 X 60Mm	1
5	6020010326-5	Retaining Oring	2
6	6020390308-4	Lock Nma - Type "R" Ø4,5 X 80Mm	1
7	6020317571-2	Heavy Elastic Pin Ø5 X 40mm	1
8	6020310508-0	Heavy Elastic Pin Ø8 X 40Mm	1
9	6020312020-9	Hexagonal Head Bolt 5/16" X 3/4" 18F Unc1A Gr5 Rt	10
10	6020310038-0	Hexagonal Head Bolt 5/16" X 1" 18F Unc1A Gr5 Rt	6
11	6020311020-3	Hexagonal Head Bolt 5/16" X 1/2" 18F Unc1A Gr2 Rt	8
12	6020350274-8	Retainer Ø15,90 X Ø25,40 X 4,50Mm	1
13	6020350075-3	Bearing 6005 2Rs	1
14	6020350006-0	Bearing 6006 2Rs Ddu	2
15	5080010232-1	Bushing Of Ø25 X 100Mm	1
16	5260040007-0	Numerical Regulating Shaft De 200Mm	1
17	5538010093-1	Cover Of Reduction Box	1
18	5112010011-8	Right Gear Box Housing	1
18	5112010012-6	Left Gear Box Housing	1
19	5232010695-8	Small Shaft Of Gear Box	1
20	5080020804-9	Bushing Of Ø30 X Ø35 X 21Mm	1
21	5081010013-0	Plug R.1/2 X 14 Npt W/Hole 3,00Mm	1
22	5468010024-4	Shaft Handle	1
23	6020312502-2	Bolt Nº10 X 1/2" 24F Unc2A Gr2 Rt	2
24	6020010999-9	Gear 21 Teeth	2
25	5232120183-0	Small Shaft Of Gear Box	1
26	5538010086-9	Front Cover Of Reduction Box	1
27	6020430193-2	Oil Display	1
28	5256060005-4	Crown Of Reduction Box	1
29	6020317426-0	Allen Bolt S/C 1/2" X 3/4" 12F W Cl12.9 Rt (Phosphated)	2
30	6020030015-0	Protection Speed Box Protection With Hole	1
31	6020310506-4	Heavy Elastic Pin Ø6 X 40Mm	1
32	6020390301-7	Lock Ø5,75 X 50Mm	1
33	5538010085-0	Rear Cover	1
34	5554010015-1	Left Support	1
35	6020350086-9	Bearing Skf 51203	1
36	5081010012-2	Plug R.1/2 X 14 Npt	1
37	6020350275-6	Retainer Ø30,00 X Ø43,00 X 9,50Mm	1
38	6020010305-2	Retaining Ring I-42	1
39	6020010022-3	O´Ring 2-114 N3006-90Nbr (15,54)	1
40	5554010017-8	Right Support	1
41	6020350204-7	Retainer Ø25,00 X Ø47,00 X 10,00Mm	1
42	5260040006-1	Alphabetical Regulating Shaft De 299Mm	1
43	5232020209-4	Shaft Ø5/8" X 157Mm	1
44	6020350245-4	Retainer Ø30,00 X Ø52,00 X 10,00Mm	1
45	5538060003-9	Cover Of 100 X 250 X 3,00Mm	1

• Planting Rows

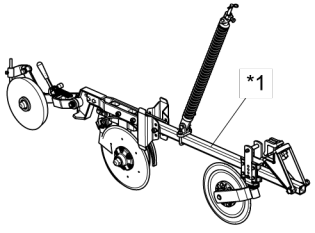

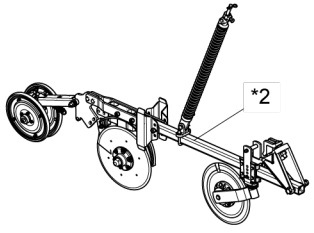

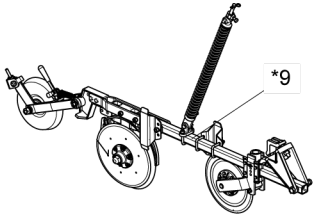

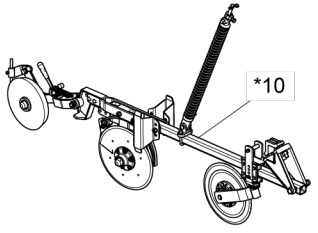

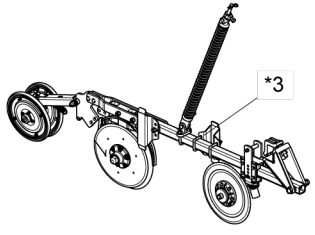

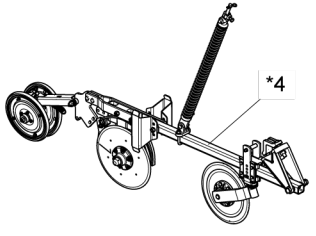

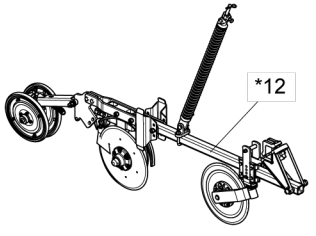

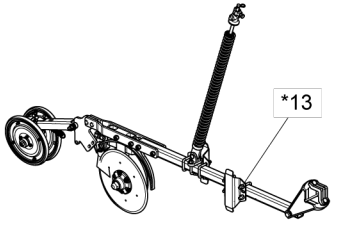

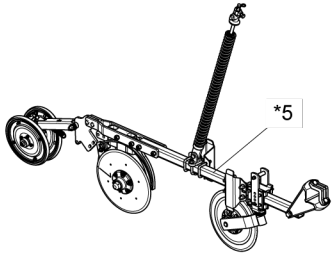

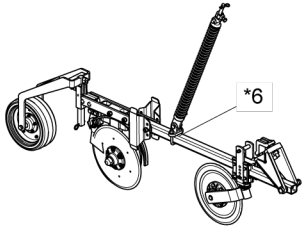

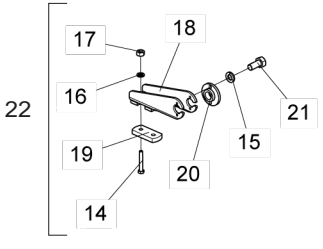

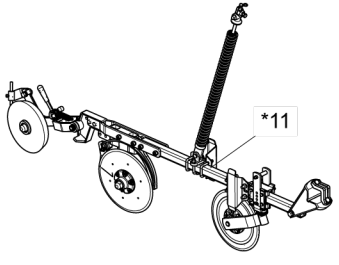

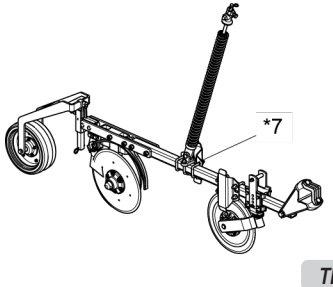

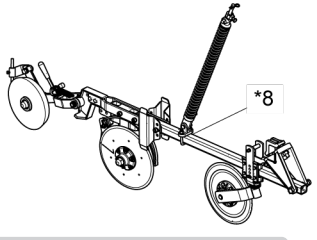

The number of Items from 14 to 21 refer to 1 (one) Row.

* Item 1 - See page 30
* Item 2 - See page 33
* Item 3 - See page 36
* Item 4 - See page 39
* Item 5 - See page 42
* Item 6 - See page 45
* Item 7 - See page 48
* Item 8 - See page 51
* Item 9 - See page 54
* Item 10 - See page 57
* Item 11 - See page 60
* Item 12 - See page 63
* Item 13 - See page 66

• Planting Rows

Item	Code	Product description	All
1	2517012277-4	Large Right Row Unit W/Rippled Cutting Disc W/Iron Compactor Wheel Heavy W/Frieze Of 40mm(SPDEA)	7
1	2517012275-8	Small Right Row Unit W/Rippled Cutting Disc W/Iron Compactor Wheel Heavy W/Frieze Of 40mm(SPDEA)	8
1	2517012276-6	Large Left Row Unit W/Rippled Cutting Disc W/Iron Compactor Wheel Heavy W/Frieze Of 40mm(SPDEA)	8
1	2517012274-0	Small Left Row Unit W/Rippled Cutting Disc W/Iron Compactor Wheel Heavy W/Frieze Of 40mm(SPDEA)	7
1	2517012279-0	Large Right Lateral Row Unit W/Rippled Cutting Disc W/Iron Compactor Wheel Heavy W/Frieze Of 40mm(SPDEA)	1
1	2517012278-2	Small Left Lateral Row Unit W/Rippled Cutting Disc W/Iron Compactor Wheel Heavy W/Frieze Of 40mm(SPDEA)	1
		Optional	
*2	2517011755-0	Small Right Row Unit W/Cutting Rippled Disc W/Compactor "V" Wheel	1
*2	2517011756-8	Large Right Row Unit W/Cutting Rippled Disc W/Compactor "V" Wheel	1
*2	2517011757-6	Small Left Row Unit W/Cutting Rippled Disc W/Compactor "V" Wheel	1
*2	2517011758-4	Large Left Row Unit W/Cutting Rippled Disc W/Compactor "V" Wheel	1
*3	2517011769-0	Large Right Lateral Row Unit W/Cutting Rippled Disc W/Compactor "V" Wheel	1
*3	2517011770-3	Left Lateral Row Unit W/Cutting Rippled Disc W/Wheel	1
*4	2517012448-3	Small Right Row W/Rippled Cutting Disc W/ "V"Compactation Wheel Spacing 250mm	1
*4	2517012449-1	Large Right Row W/Rippled Cutting Disc W/ "V"Compactation Wheel Spacing 250mm	1
*4	2517012450-5	Small Left Row W/Rippled Cutting Disc W/ "V"Compactation Wheel Spacing 250mm	1
*4	2517012451-3	Large Left Row W/Rippled Cutting Disc W/ "V"Compactation Wheel Spacing 250mm	1
*5	2517012459-9	Small Lateral Right Row W/Rippled Cutting Disc W/ "V"Compactation Wheel Spacing 250mm	1
*5	2517012453-0	Small Lateral Left Row W/Rippled Cutting Disc W/ "V"Compactation Wheel Spacing 250mm	1
*6	2517012332-0	Large Right Row Unit W/Rippled Coulter Disc W/Concave Depth Wheel W/Regulator Support(SPDEA)	1
*6	2517012333-9	Small Right Row Unit W/Rippled Coulter Disc W/Concave Depth Wheel W/Regulator Support(SPDEA)	1
*6	2517012334-7	Large Left Row Unit W/Rippled Coulter Disc W/Concave Depth Wheel W/Regulator Support(SPDEA)	1
*6	2517012336-3	Small Left Row Unit W/Rippled Coulter Disc W/Concave Depth Wheel W/Regulator Support(SPDEA)	1
*7	2517012337-1	Large Right Lateral Row Unit W/Concave Depth Rippled Coulter Disc W/Regulator Support(SPDEA)	1
*7	2517012335-5	Small Left Lateral Row Unit W/Rippled Coulter Disc W/Heavy Iron Compactor Wheel (SPDEA)	1
*8	2517011530-1	Small Right Row Unit W/Iron Wheel Compactor Heavy (SPDEA)	1
*8	2517011531-0	Large Right Row Unit W/Iron Wheel Compactor Heavy (SPDEA)	1
*8	2517011532-8	Small Left Row Unit W/Iron Wheel Compactor Heavy (SPDEA)	1
*8	2517011533-6	Large Left Row Unit W/Iron Wheel Compactor Heavy (SPDEA)	1
*8	2517011534-4	Small Right Row Unit W/Cutting Rippled Disc W/Iron Wheel Compactor	1
*8	2517011535-2	Large Right Row Unit W/Cutting Rippled Disc W/Iron Wheel Compactor	1
*8	2517011536-0	Small Left Row Unit W/Cutting Rippled Disc C/Iron Compactor Wheel	1
*8	2517011537-9	Large Left Row Unit W/Cutting Rippled Disc C/Iron Compactor Wheel	1
*9	2517011765-7	Right Lateral Row Unit Maior W/Iron Wheel Compactor Pesada(SPDEA)	1
*9	2517011766-5	Small Left Lateral Row Unit W/Iron Wheel Compactor Pesada(SPDEA)	1
*9	2517011767-3	Large Right Lateral Row Unit W/Cutting Rippled Disc C/Iron Compactor Wheel	1
*9	2517011768-1	Small Left Lateral Row Unit W/Rippled Coulter Disc W/Concave Depth Wheel W/Regulator Support	1
*10	2517012375-4	Small Right Row Unit W/Cutting Rippled Disc W/Iron Wheel Compactor	1
*10	2517012376-2	Small Right Row Unit W/Cutting Rippled Disc W/Iron Wheel Compactor	1
*10	2517012377-0	Small Right Row Unit W/Cutting Rippled Disc W/Iron Wheel Compactor	1
*10	2517012378-9	Small Right Row Unit W/Cutting Rippled Disc W/Iron Wheel Compactor	1
*11	2517012460-2	Small Right Lateral Row W/Rippled Cutting Disc W/ Heavy Iron Compactation Wheel Spacing 250mm	1
*11	2517012380-0	Large Right Lateral Row Unit W/Cutting Rippled Disc C/Iron Compactor Wheel	1
*12	2517012283-9	Large Right Row Unit W/Rippled Cutting Disc W/"V" Compactor Wheel W/Frieze Of 40mm(SPDEA)	7
*12	2517012281-2	Small Right Row Unit W/Rippled Cutting Disc W/"V" Compactor Wheel W/Frieze Of 40mm(SPDEA)	8
*12	2517012282-0	Large Left Row Unit W/Rippled Cutting Disc W/"V" Compactor Wheel W/Frieze Of 40mm(SPDEA)	8
*12	2517012280-4	Small Left Row Unit W/Rippled Cutting Disc W/"V" Compactor Wheel W/Frieze Of 40mm(SPDEA)	7
*12	2517012285-5	Large Right Lateral Row Unit W/Rippled Cutting Disc W/"V" Compactor Wheel W/Frieze Of 40mm(SPDEA)	1

Item	Code	Product description	All
*12	2517012284-7	Small Left Lateral Row Unit W/Rippled Cutting Disc W/"V" Compactor Wheel W/Frieze Of 40mm(SPDEA)	1
*13	2517012289-8	Large Right Row Unit W/"V" Compactor Wheel W/Frieze Of 40mm(SPDEA)	7
*13	2517012287-1	Small Right Row Unit W/"V" Compactor Wheel W/Frieze 40mm)(SPDEA)	8
*13	2517012288-0	Large Left Row Unit W/"V" Compactor Wheel W/Frieze Of 40mm(SPDEA)	8
*13	2517012286-3	Small Left Row Unit W/"V" Compactor Wheel W/Frieze Of 40mm(SPDEA)	7
*13	2517012291-0	Large Right Lateral Row Unit W/"V" Compactor Wheel W/Frieze Of 40mm(SPDEA)	1
*13	2517012290-1	Small Left Lateral Row Unit W/"V" Compactor Wheel W/Frieze Of 40mm(SPDEA)	1
14	6020317552-6	Hexagonal Head Bolt M12 X 1,75 X 80mm Cl8.8 Rt	2
15	6020010404-0	Pressure Washer 5/16" Media Industry	4
16	6020010395-8	Pressure Washer M12 Media	2
17	6020310820-9	Hexagonal Nut M12 X 1,75 Ma Cl8 Ch.19mm H.10,00mm	2
18	5530015339-8	Complete Support Of Spring Rod	1
19	5136020501-4	Plate Of 2" X 5/8" X 115mm	1
20	6020030715-4	Articulation Bushing Of Spring Rod	2
21	6020312020-9	Hexagonal Head Bolt 5/16" X 3/4" 18F Unc1A Gr5 Rt	4
22	5530015346-0	Support W/Bushing Of Spring Rod	1

• Row W/Rippled Cutting Disc W/Iron Compactor Wheel Heavy W/Frieze Of 40mm

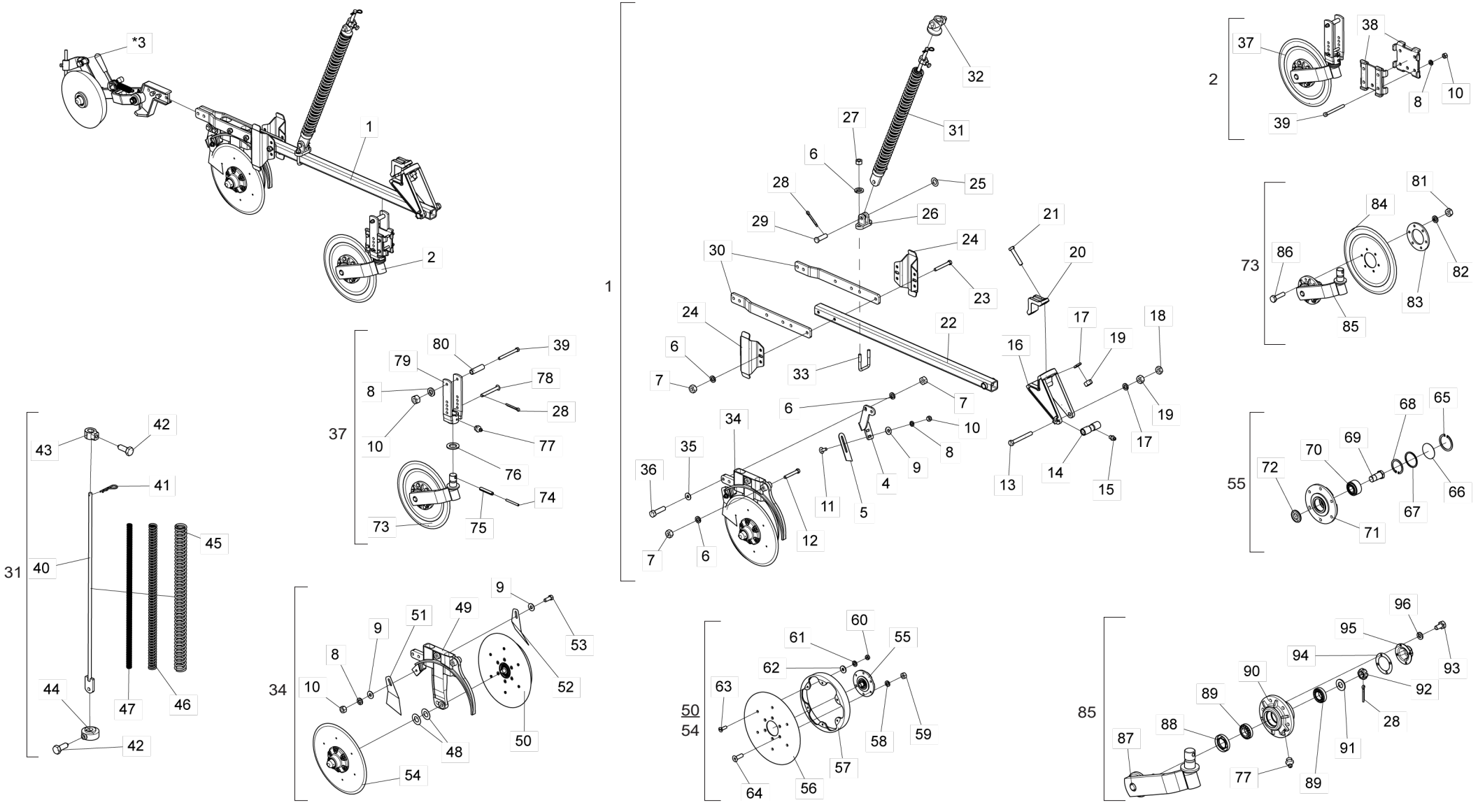

• Table Row W/Rippled Cutting Disc W/Iron Compactor Wheel Heavy W/Frieze Of 40mm

Item	Code	Product description	All	Larger Right	Smaller Right	Larger Left	Smaller Left	Right Side	Left Side
1	2517012312-6	Small Left Row Unit W/Frieze Of 40mm(SPDEA)					1		
1	2517012313-4	Small Right Row Unit W/Frieze Of 40mm(SPDEA)			1				
1	2517012314-2	Large Left Row Unit W/Frieze Of 40mm(SPDEA)				1			
1	2517012315-0	Large Right Row Unit W/Frieze Of 40mm(SPDEA)		1					
1	2517012320-7	Large Right Lateral Row Unit W/Frieze Of 40mm(SPDEA)						1	
1	2517012321-5	Small Left Lateral Row Unit W/Frieze Of 40mm(SPDEA)							1
2	5124010337-4	Complete Row Of Rippled Coulter Disc Blade	1						
*3	5124010575-0	Row Of Right Heavy Iron Complete Compactation Wheel				1	1		1
*3	5124010576-8	Row Of Left Heavy Iron Complete Compactation Wheel		1	1			1	
4	5530014452-6	Right Support Of Scraper		1		1			1
4	5530014453-4	Left Support Of Scraper			1		1	1	
5	5352010048-9	Limiter Of Limiter Rim	1						
6	6020010410-5	Pressure Washer 1/2" Media Industry		8	8	12	12	16	12
7	6020310754-7	Hexagonal Nut 1/2" 12F W Gr5 Ch.7/8" Height 12,00mm		6	6	10	10	14	10
8	6020010406-7	Pressure Washer 3/8" Media Industry	8						
9	5024010075-1	Smooth Washer Ø10,3 X Ø25 X 2,00mm	4						
10	6020310746-6	Hexagonal Nut 3/8" 16F Unc Gr5 Ch.9/16" Height 8,50mm	8						
11	6020311160-9	French Head Bolt 3/8" X 1" 16F Unc1A Gr2 Rt	2						
12	6020311061-0	Hexagonal Head Bolt 1/2" X 3.1/2" 12F W Gr5 Rp		2	2	4	4	4	2
13	6020311082-3	Hexagonal Head Bolt 5/8" X 5.1/2" 11F Unc1A Gr5 Rp	1						
14	5080010539-8	Row Articulation Bushing	1						
15	6020130100-1	Grease Fitting 1/4"	1						
16	5252040056-7	Row Hitch	1						
17	6020010412-1	Pressure Washer 5/8" Media Industry	3						
18	6020310738-5	Hexagonal Nut 5/8" 11F Unc Gr5 Ch.1.1/16" Height 11,00mm	1						
19	6020310760-1	Hexagonal Nut 5/8" 11F Unc Gr5 Ch.1.1/16" Height 15,00mm	3						
20	6010601347-3	Fixation Shank Of Coulter Disc	1						
21	6020311079-3	Hexagonal Head Bolt 5/8" X 3.1/2" 11F Unc1A Gr5 Rp	2						
22	5572015584-1	Square Beam Of50 X 1200mm Complete	1						
23	6020311065-3	Hexagonal Head Bolt 1/2" X 4" 12F W Gr5 Rp		2	2				2
24	5526010018-0	Separator Of Rowas	2						
25	5024010059-0	Smooth Washer Ø16,5 X Ø29 X 1,21mm	1						
26	6010601172-1	Lower Support Of Rod (Small)	1						
27	6020310756-3	Hexagonal Nut 1/2" 12F W Gr5 Ch.3/4" Height 11,00mm	2						
28	6020050101-5	Cotterpin 1/8" X 1"	3						
29	6020310593-5	Pin Ø5/8" X 46mm	1						
30	5136015261-1	Fixation Plate Of Double Disc	2						
31	5566010260-3	Small Rod Of Spring Of 700mm Complete		1	1				1
31	5566010261-1	Smalll Rod Of Spring Of 800mm Complete				1	1	1	
32	6010601280-9	Upper Lock Of Triple Spring	1						
33	5068010081-8	Clamp Of 84 X 64 X R.1/2" W		1	1	3	3	5	3
34	5124018021-2	Fertilizer/Seed Double Disc Right Row W/Frieze 40mm(Decentered) Special			1		1	1	
34	5124018022-0	Fertilizer/Seed Double Disc Left Row W/Frieze 40mm(Decentered) Special		1		1			1
35	5024010068-9	Smooth Washer Ø13,3 X Ø35,5 X 3,00mm	2						

Item	Code	Product description	All	Larger Right	Smaller Right	Larger Left	Smaller Left	Right Side	Left Side
36	6020310049-6	Hexagonal Head Bolt 1/2" X 2" 12F W Gr5 Rp	2						
37	5124010099-5	Rippled Coulter Disc Row	1						
38	5324050014-7	Complete Adjustment Support Guide	2						
39	6020311038-6	Hexagonal Head Bolt 3/8" X 4" 16F Unc1A Gr2 Rp	5						
40	5566010205-0	Rod Of Spring De 1085,5mm				1	1	1	
40	5566040144-9	Rod Of Spring De 935,5mm		1	1				1
41	6020390294-0	Lock Nma - Type "R" Ø3,5 X 67mm(Special)		1	1	1	1	1	1
42	6020310349-5	Hexagonal Head Bolt M12 X 1,75 X 30mm Cl8.8 R Wth Point		2	2	2	2	2	2
43	5080011663-2	Fixation Support Of Spring Rod		1	1	1	1	1	1
44	5530016364-4	Lower Support Of Triple Spring		1	1	1	1	1	1
45	6020250664-2	Helical Spring Ø43 X Ø59 X 700mm External		1	1				1
45	6020250667-7	Helical Spring Ø43 X Ø59 X 800mm External				1	1	1	
46	6020250663-4	Helical Spring Ø27,3 X Ø40 X 700mm Intermediary		1	1				1
46	6020250666-9	Helical Spring Ø27,3 X Ø40 X 800mm Intermediary				1	1	1	
47	6020250662-6	Helical Spring Ø17,5 X Ø25,5 X 700mm Internal		1	1				1
47	6020250665-0	Helical Spring Ø17,5 X Ø25,5 X 800mm Internal				1	1	1	
48	5024010024-7	Smooth Washer Ø20 X Ø38 X 1,21mm	4						
49	5530011576-3	Left Support Of Large Fertilizer/Seed Large Double Disc		1		1			1
49	5530011577-1	Right Support Of Fertilizer And Seed Large Double Disc (Descentrado)			1		1	1	
50	5204010578-6	Complete Right Hub W/Limiter Frieze 40mm(Plan Disc 15" X 4,00mm)		1		1			1
50	5204010579-4	Complete Left Hub W/Limiter Frieze 40mm(Plan Disc 15" X 4,00mm)			1		1	1	
51	5352030057-7	Internal Right Scraper Of Disc	1						
52	5352030056-9	Internal Left Scraper Of Disc	1						
53	6020310054-2	Hexagonal Head Bolt 3/8" X 1" 16F Unc1A Gr2 Rt	1						
54	5204010576-0	Complete Right Hub (Plan Disc 15" X 4,00mm)			1		1	1	
54	5204010577-8	Complete Left Hub (Plan Disc 15" X 4,00mm)		1		1			1
55	5204010451-8	Right Disc Hub	1						
55	5204010452-6	Left Disc Hub	1						
56	2857398003-6	Coulter Plain Disc Blade 15 X 4,00 Hc Rd 80mm + 6H Rd 8,7mm R=57,5mm + 6H Rd 6,9mm	1						
57	6010600786-4	Deph Limiter Ring (40mm)		1	1	1	1	1	1
58	6020010004-5	Pressure Washer M8 Media	6						
59	6020310454-8	Hexagonal Nut M8 X 1,25 Ma Cl8 Ch.13mm H.6,50mm	6						
60	6020311257-5	Hexagonal Nut M6 X 1,00 Ma Cl8 Ch.10mm H.5,00mm		6	6	6	6	6	6
61	6020010122-0	Pressure Washer M6 Media		6	6	6	6	6	6
62	5024010161-8	Smooth Washer Ø7 X Ø18 X 2,00mm		6	6	6	6	6	6
63	6020317441-4	Bolt M6 X 1,00 X 20mm Cl8.8 Rt		6	6	6	6	6	6
64	6020317573-9	Allen Bolt M8 X 1,25 X 25mm Cl12.9 RT	6						
65	6020010289-7	Retaining Ring I-55	1						
66	5096010050-3	Hub Cap	1						
67	6020010095-9	Gascket Ring 047X 052X 2mm	1						
68	6020011053-9	Retaining Ring I-047	1						
69	5420010098-3	Hexagonal Head Bolt 3/4" X 1.7/8" 16F Unf 1A Gr5 Rp - Read Right (Special)		1					
69	5420010099-1	Hexagonal Head Bolt 3/4" X 1.7/8" 16F Unf 1A Gr5 Rp - Read Left (Special)			1				
70	6020350933-5	Sphere Bearing Double Row 5204Kp52-Sp6(1º Line)	1						

BALDAN

• Table Row W/Rippled Cutting Disc W/Iron Compactor Wheel Heavy W/Frieze Of 40mm

Item	Code	Product description	All	Larger Right	Smaller Right	Larger Left	Smaller Left	Side Right	Side Left
71	5204010453-4	Hub Of Ø136 X 41mm	1						
72	6020056005-4	Dual Ball Races Bearing Cap 5204Kp52-Sp6 (1ºline)	1						
73	5124010100-2	Row W/Rippled Coulter Disc Blade	1						
74	6020310472-6	Heavy Elastic Pin Ø6 X 55mm	1						
75	6020310510-2	Heavy Elastic Pin Ø10 X 55mm	1						
76	5024010107-3	Smooth Washer Ø36 X Ø61 X 5,00mm	1						
77	6020130108-7	Grease Fitting 1/8"	2						
78	5432010181-9	French Head Pin Ø11,20 X 90mm	1						
79	5530010406-0	Depth Regulator Support	1						
80	5080020787-5	Bushing Of Ø14 X Ø19 X 65mm	1						
81	6020310822-5	Hexagonal Nut M10 X 1,50 Ma Cl8 Ch.17mm H.8,00mm	6						
82	6020010394-0	Pressure Washer M10 Media	6						
83	5284010001-4	Flange Of Disc Hub	1						
84	3255397388-0	Rippled Plain Disc Blade 14 X 4,00 Hc Rd 80mm + 6H Rd 10,3mm D=115mm Doble Bevel	1						
85	5530010405-2	Support Of Disc W/Hub	1						
86	6020310980-9	Hexagonal Head Bolt M10 X 1,50 X 40mm Cl8.8 Rt	6						
87	5530160187-4	Support W/Shaft Of Disc	1						
88	6020350244-6	Retainer Ø35,00 X Ø58,00 X 10,00mm	1						
89	6020350077-0	Bearing 44610/49	2						
90	5204010090-3	Disc Hub	1						
91	5024010258-4	Smooth Washer Ø20 X Ø38,5 X 3,00mm	1						
92	6020310797-0	Nut 3/4" 16F Unf Gr5 Ch.1.1/16" Height 13,00mm	1						
93	6020311000-9	Hexagonal Head Bolt 1/4" X 1/2" 20F Unc1A Gr5 Rt	4						
94	6020190098-3	Gascket Ø50,3 X Ø73,5 X 1/64"	1						
95	6020050640-8	Hub Cap	1						
96	6020010402-4	Pressure Washer 1/4" Media Industry	4						

• Row W/Cutting Disc and Compactation Wheel type "V" - Spacing 170mm

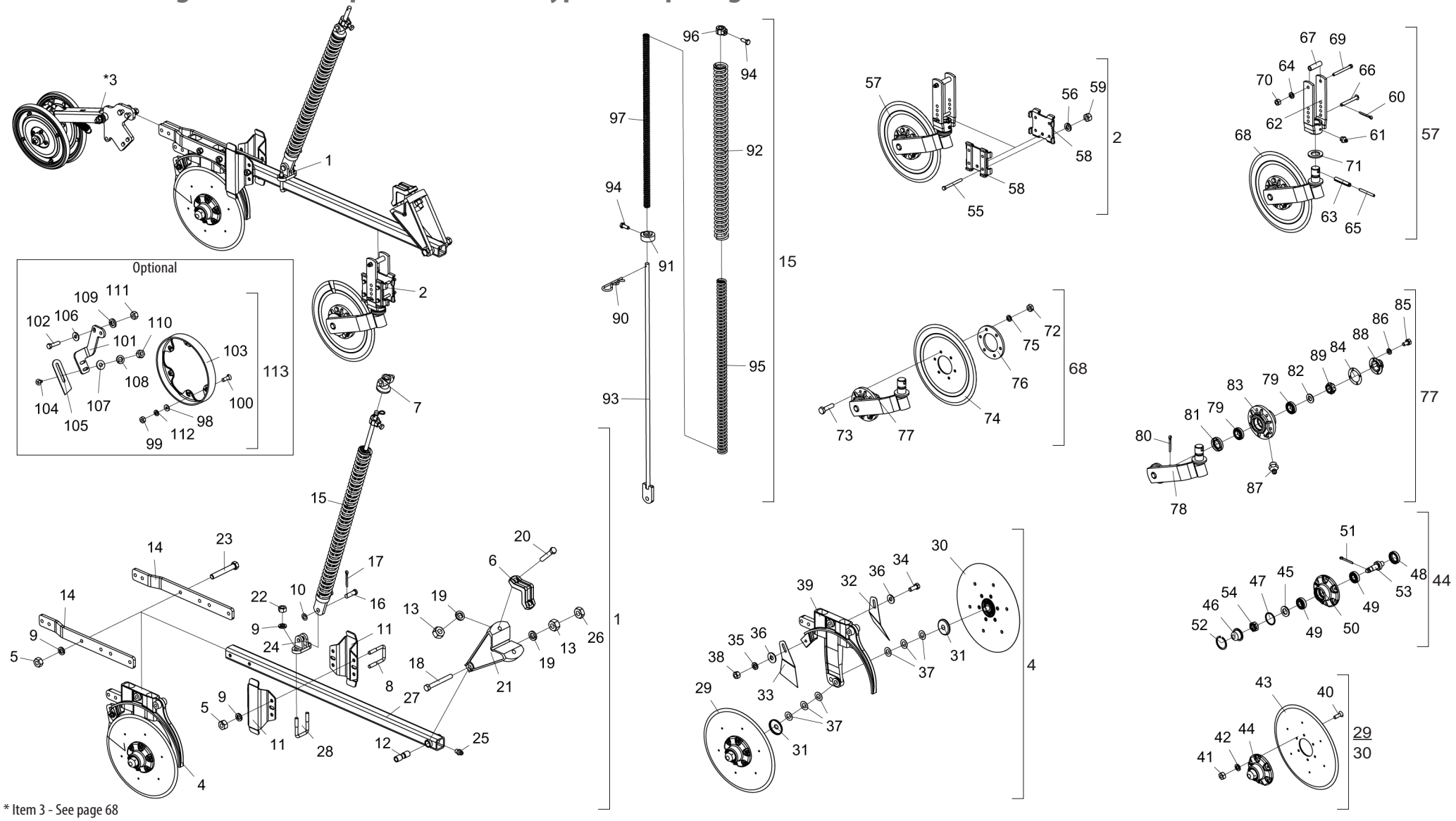

* Item 3 - See page 68

• Table Row W/Cutting Disc and Compactation Wheel type "V" - Spacing 170mm

Item	Code	Product description	All	Small Right	Large Right	Small Left	Large Left
1	2517011538-7	Small Right Row Unit(Spde-A)		1			
1	2517011539-5	Large Right Row Unit(Spde-A)			1		
1	2517011540-9	Small Left Row Unit(Spde-A)				1	
1	2517011541-7	Large Left Row Unit(Spde-A)					1
2	5124010337-4	Complete Cart Of Rippled Coulter Disc Blade	1				
*3	5124010381-1	Complete Cart Of Compactation Wheel Type "V" (Spd)	1				
4	5124010372-2	Complete Cart Of Double Disc Fertilizer/Seed (Excentric) Special		1	1		
4	5124010373-0	Left Cart Of Fertilizer/Seed Double Disc (Excentric) Special				1	1
5	6020310754-7	Hexagonal Nut 1/2" 12F W Gr5 Ch.7/8" Height 12,00Mm		4	8	4	8
6	6010601347-3	Fixation Shank Of Coulter Disc	1				
7	6010601280-9	Upper Lock Of Triple Spring	1				
8	6020311065-3	Hexagonal Head Bolt 1/2" X 4" 12F W Gr5 Rp		2		2	
8	5068010081-8	Clamp Of 84 X 64 X R.1/2" W			2		2
9	6020010410-5	Pressure Washer 1/2" Media Industry		6	10	6	10
10	5024010059-0	Smooth Washer Ø16,5 X Ø29 X 1,21Mm	1				
11	5526010018-0	Separator Of Rowas	2				
12	5080010539-8	Row Articulation Bushing	1				
13	6020310760-1	Hexagonal Nut 5/8" 11F Unc Gr5 Ch.1.1/16" Height 15,00Mm	3				
14	5136015261-1	Fixation Plate Of Double Disc	2				
15	5566010260-3	Small Rod Of Spring Of 700Mm Complete		1		1	
15	5566010261-1	Smalll Rod Of Spring Of 800Mm Complete			1		1
16	6020310593-5	Pin Ø5/8" X 46mm	1				
17	6020050101-5	Cotterpin 1/8" X 1"	1				
18	6020311082-3	Hexagonal Head Bolt 5/8" X 5.1/2" 11F Unc1A Gr5 Rp	1				
19	6020010412-1	Pressure Washer 5/8" Media Industry	3				
20	6020311079-3	Hexagonal Head Bolt 5/8" X 3.1/2" 11F Unc1A Gr5 Rp	2				
21	5252040056-7	Cart Hitch	1				
22	6020310756-3	Hexagonal Nut 1/2" 12F W Gr5 Ch.3/4" Height 11,00Mm	2				
23	6020311061-0	Hexagonal Head Bolt 1/2" X 3.1/2" 12F W Gr5 Rp		2	4	2	4
24	6010601172-1	Lower Support Of Rod (Small)	1				
25	6020130100-1	Grease Fitting 1/4"	1				
26	6020310738-5	Hexagonal Nut 5/8" 11F Unc Gr5 Ch.1.1/16" Height 11,00Mm	1				
27	5572015584-1	Square Beam Of50 X 1200Mm Complete	1				
28	5068010081-8	Clamp Of 84 X 64 X R.1/2" W	1				
29	5204010159-4	Complete Right Hub For Limiter Ring(Coulter Disc Blade 15" X 4,00Mm)	1				
30	5204010160-8	Complete Left Hub For Limiter Ring (Plain Disc 15" X 4,00Mm)	1				
31	5096040002-7	Hub Internal Cap	2				
32	5352030056-9	Internal Left Scraper Of Disc	1				

Item	Code	Product description	All	Small Right	Large Right	Small Left	Large Left
33	5352030057-7	Internal Right Scraper Of Disc	1				
34	6020310054-2	Hexagonal Head Bolt 3/8" X 1" 16F Unc1A Gr2 Rt	1				
35	6020010406-7	Pressure Washer 3/8" Media Industry	1				
36	5024010075-1	Smooth Washer Ø10,3 X Ø25 X 2,00Mm	2				
37	5024010024-7	Smooth Washer Ø20 X Ø38 X 1,21Mm	6				
38	6020310746-6	Hexagonal Nut 3/8" 16F Unc Gr5 Ch.9/16" Height 8,50Mm	1				
39	5530011577-1	Right Support Of Fertilizer And Seed Large Double Disc (Descentrado)		1	1		
39	5530011576-3	Left Support Of Large Fertilizer/Seed Large Double Disc				1	1
40	6020317573-9	Allen Bolt M8 X 1,25 X 25mm Cl12.9 RT	12				
41	6020310454-8	Hexagonal Nut M8 X 1,25 Ma Cl8 Ch.13Mm H.6,50Mm	12				
42	6020010004-5	Pressure Washer M8 Media	12				
43	2857398003-6	Coulter Plain Disc Blade 15 X 4,00 Hc Rd 80Mm + 6H Rd 8,7Mm R=57,5Mm + 6H Rd 6,9Mm	2				
44	5204010149-7	Left Disc Hub	1				
44	5204010150-0	Right Disc Hub	1				
45	6020010513-6	Plain Washer Ø20 X Ø35 X 3Mm	2				
46	6020050641-6	Hub Cap	2				
47	6020010095-9	Gascket Ring 047X 052X 2Mm	2				
48	6020350268-3	Retainer Ø36,00 X Ø52,00 X 11,00Mm	2				
49	6020350087-7	Bearing 30204	4				
50	5204010148-9	Hub Of Ø136 X 54Mm	2				
51	6020050101-5	Cotterpin 1/8" X 1"	2				
52	6020010289-7	Retaining Ring I-55	2				
53	5232010076-3	Shaft Ø36 X 94Mm With Left Thread	1				
53	5232010077-1	Shaft Ø36 X 94Mm With Right Thread	1				
54	6020310797-0	Nut 3/4" 16F Unf Gr5 Ch.1.1/16" Height 13,00Mm	2				
55	6020311038-6	Hexagonal Head Bolt 3/8" X 4" 16F Unc1A Gr2 Rp	4				
56	6020010406-7	Pressure Washer 3/8" Media Industry	4				
57	5124010099-5	Rippled Coulter Disc Row	1				
58	5324050014-7	Complete Adjustment Support Guide	2				
59	6020310746-6	Hexagonal Nut 3/8" 16F Unc Gr5 Ch.9/16" Height 8,50Mm	4				
60	6020050101-5	Cotterpin 1/8" X 1"	1				
61	6020130108-7	Grease Fitting 1/8"	1				
62	5530010406-0	Depth Regulator Support	1				
63	6020310510-2	Heavy Elastic Pin Ø10 X 55Mm	1				
64	6020010406-7	Pressure Washer 3/8" Media Industry	1				
65	6020310472-6	Heavy Elastic Pin Ø6 X 55Mm	1				
66	5432010181-9	French Head Pin Ø11,20 X 90Mm	1				
67	5080020787-5	Bushing Of Ø14 X Ø19 X 65Mm	1				

• Table Row W/Cutting Disc and Compactation Wheel type "V" - Spacing 170mm

Item	Code	Product description	All	Small Right	Large Right	Small Left	Large Left
68	5124010100-2	Cart W/Rippled Coulter Disc Blade	1				
69	6020311038-6	Hexagonal Head Bolt 3/8" X 4" 16F Unc1A Gr2 Rp	1				
70	6020310746-6	Hexagonal Nut 3/8" 16F Unc Gr5 Ch.9/16" Height 8,50Mm	1				
71	5024010107-3	Smooth Washer Ø36 X Ø61 X 5,00Mm	1				
72	6020310822-5	Hexagonal Nut M10 X 1,50 Ma Cl8 Ch.17Mm H.8,00Mm	6				
73	6020310980-9	Hexagonal Head Bolt M10 X 1,50 X 40Mm Cl8.8 Rt	6				
74	3255397388-0	Rippled Plain Disc Blade 14 X 4,00 Hc Rd 80Mm + 6H Rd 10,3Mm D=115Mm Doble Bevel	1				
75	6020010394-0	Pressure Washer M10 Media	6				
76	5284010001-4	Flange Of Disc Hub	1				
77	5530010405-2	Support Of Disc W/Hub	1				
78	5530160187-4	Support W/Shaft Of Disc	1				
79	6020350077-0	Bearing 44610/49	2				
80	6020050101-5	Cotterpin 1/8" X 1"	1				
81	6020350244-6	Retainer Ø35,00 X Ø58,00 X 10,00Mm	1				
82	5024010258-4	Smooth Washer Ø20 X Ø38,5 X 3,00Mm	1				
83	5204010090-3	Disc Hub	1				
84	6020190098-3	Gascket Ø50,3 X Ø73,5 X 1/64"	1				
85	6020311000-9	Hexagonal Head Bolt 1/4" X 1/2" 20F Unc1A Gr5 Rt	4				
86	6020010402-4	Pressure Washer 1/4" Media Industry	4				
87	6020130108-7	Grease Fitting 1/8"	1				
88	6020050640-8	Hub Cap	1				
89	6020310797-0	Nut 3/4" 16F Unf Gr5 Ch.1.1/16" Height 13,00Mm	1				
90	6020390294-0	Lock Nma - Type "R" Ø3,5 X 67Mm(Special)	1				
91	5530016364-4	Lower Support Of Triple Spring	1				
92	6020250664-2	Helical Spring Ø43 X Ø59 X 700Mm External		1		1	
92	6020250667-7	Helical Spring Ø43 X Ø59 X 800Mm External			1		1
93	5566040144-9	Rod Of Spring De 935,5Mm		1		1	
93	5566010205-0	Rod Of Spring De 1085,5Mm			1		1
94	6020310349-5	Hexagonal Head Bolt M12 X 1,75 X 30Mm Cl8.8 R Wth Point	2				
95	6020250663-4	Helical Spring Ø27,3 X Ø40 X 700Mm Intermediary		1		1	
95	6020250666-9	Helical Spring Ø27,3 X Ø40 X 800Mm Intermediary			1		1
96	5080011663-2	Fixation Support Of Spring Rod	1				
97	6020250662-6	Helical Spring Ø17,5 X Ø25,5 X 700Mm Internal		1		1	
97	6020250665-0	Helical Spring Ø17,5 X Ø25,5 X 800Mm Internal			1		1
		Optional					
98	5024010161-8	Smooth Washer Ø7 X Ø18 X 2,00Mm	6				
99	6020310742-3	Hexagonal Nut 1/4" 20F Unc Gr5 Ch.7/16" Height 5,50Mm	6				
100	6020310147-6	Bolt 1/4" X 3/4" 20F Unc1A Gr5 Rt	6				

Item	Code	Product description	All	Small Right	Large Right	Small Left	Large Left
101	5530014453-4	Left Support Of Scraper		1	1		
101	5530014452-6	Right Support Of Scraper				1	1
102	6020310049-6	Hexagonal Head Bolt 1/2" X 2" 12F W Gr5 Rp	2				
103	6010600786-4	Deph Limiter Ring (40Mm)	1				
104	6020311160-9	French Head Bolt 3/8" X 1" 16F Unc1A Gr2 Rt	2				
105	5352010048-9	Limiter Of Limiter Rim	1				
106	5024010068-9	Smooth Washer Ø13,3 X Ø35,5 X 3,00Mm	2				
107	5024010075-1	Smooth Washer Ø10,3 X Ø25 X 2,00Mm	2				
108	6020010406-7	Pressure Washer 3/8" Media Industry	2				
109	6020010410-5	Pressure Washer 1/2" Media Industry	2				
110	6020310746-6	Hexagonal Nut 3/8" 16F Unc Gr5 Ch.9/16" Height 8,50Mm	2				
111	6020310754-7	Hexagonal Nut 1/2" 12F W Gr5 Ch.7/8" Height 12,00Mm	2				
112	6020010402-4	Pressure Washer 1/4" Media Industry	6				
113	5288010055-6	Left Limiter Ring With Scraper (Deph 40Mm)		1	1		
113	5288010054-8	Right Limiter Ring With Scaper (Deph 40Mm)				1	1

• Lateral Row W/Cutting Disc and Compactation Wheel type "V" - Spacing 170mm

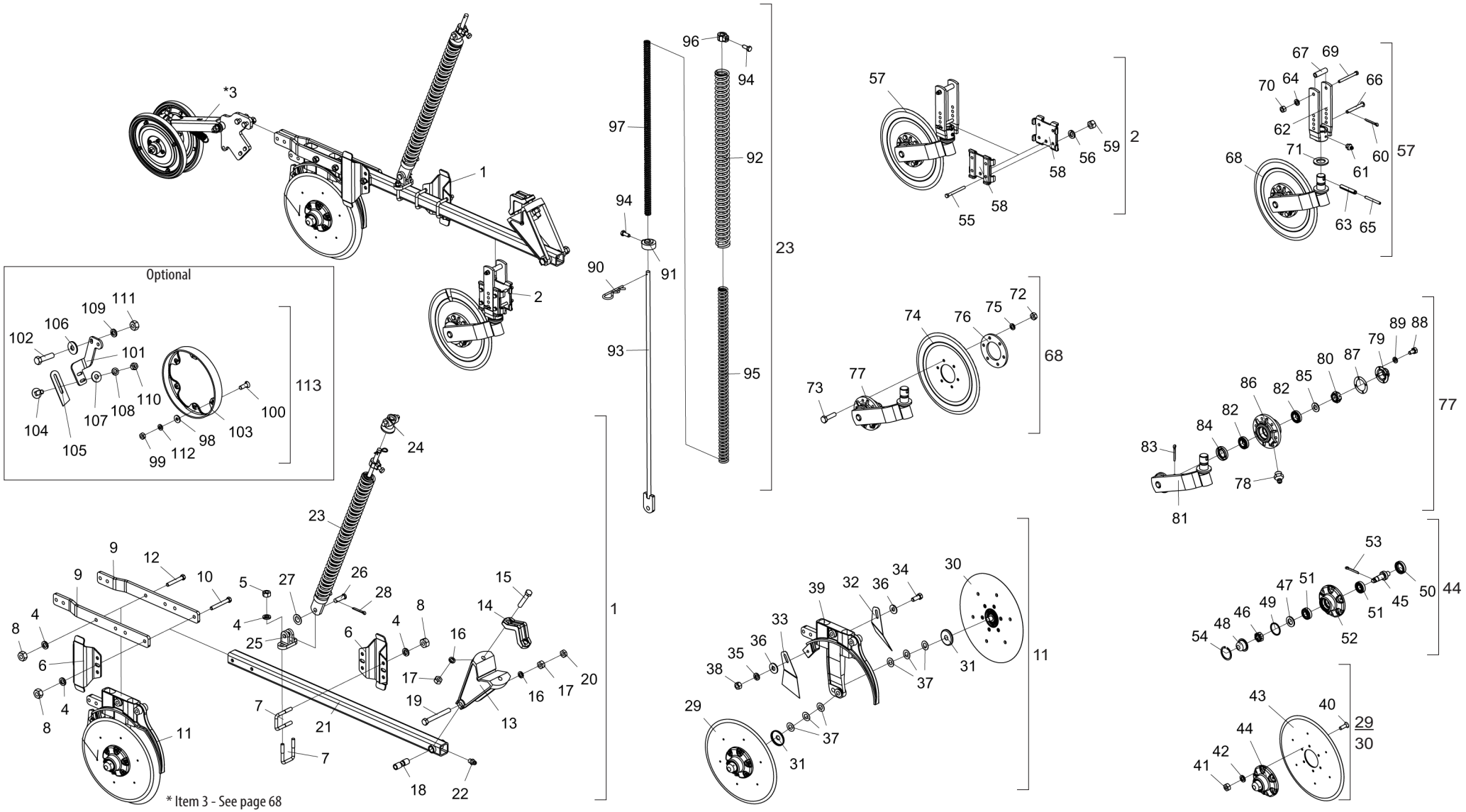

* Item 3 - See page 68

• Table Lateral Row W/Cutting Disc and Compactation Wheel type "V" - Spacing 170mm

Item	Code	Product description	All	Large Right	Small Left
1	2517011763-0	Large Right Lateral Row Unit (Spde-A)		1	
1	2517011764-9	Small Left Lateral Row Unit(Spde-A)			1
2	5124010337-4	Complete Cart Of Rippled Coulter Disc Blade	1		
*3	5124010381-1	Complete Cart Of Compactation Wheel Type "V" (Spd)	1		
4	6020010410-5	Pressure Washer 1/2" Media Industry		14	10
5	6020310756-3	Hexagonal Nut 1/2" 12F W Gr5 Ch.3/4" Height 11,00Mm	2		
6	5526010018-0	Separator Of Rowas	2		
7	5068010081-8	Clamp Of 84 X 64 X R.1/2" W	3		
8	6020310754-7	Hexagonal Nut 1/2" 12F W Gr5 Ch.7/8" Height 12,00Mm		12	8
9	5136015261-1	Fixation Plate Of Double Disc	2		
10	5068010081-8	Clamp Of 84 X 64 X R.1/2" W		2	
10	6020311065-3	Hexagonal Head Bolt 1/2" X 4" 12F W Gr5 Rp			2
11	5124010372-2	Complete Cart Of Double Disc Fertilizer/Seed (Excentric) Special		1	
11	5124010373-0	Left Cart Of Fertilizer/Seed Double Disc (Excentric) Special			1
12	6020311061-0	Hexagonal Head Bolt 1/2" X 3.1/2" 12F W Gr5 Rp		4	2
13	5252040056-7	Cart Hitch	1		
14	6010601347-3	Fixation Shank Of Coulter Disc	1		
15	6020311079-3	Hexagonal Head Bolt 5/8" X 3.1/2" 11F Unc1A Gr5 Rp	2		
16	6020010412-1	Pressure Washer 5/8" Media Industry	3		
17	6020310760-1	Hexagonal Nut 5/8" 11F Unc Gr5 Ch.1.1/16" Height 15,00Mm	3		
18	5080010539-8	Row Articulation Bushing	1		
19	6020311082-3	Hexagonal Head Bolt 5/8" X 5.1/2" 11F Unc1A Gr5 Rp	1		
20	6020310738-5	Hexagonal Nut 5/8" 11F Unc Gr5 Ch.1.1/16" Height 11,00Mm	1		
21	5572015584-1	Square Beam Of50 X 1200Mm Complete	1		
22	6020130100-1	Grease Fitting 1/4"	1		
23	5566010261-1	Smalll Rod Of Spring Of 800Mm Complete		1	
23	5566010260-3	Small Rod Of Spring Of 700Mm Complete			1
24	6010601280-9	Upper Lock Of Triple Spring	1		
25	6010601172-1	Lower Support Of Rod (Small)	1		
26	6020310593-5	Pin Ø5/8" X 46mm	1		
27	5024010059-0	Smooth Washer Ø16,5 X Ø29 X 1,21Mm	1		
28	6020050101-5	Cotterpin 1/8" X 1"	1		
29	5204010159-4	Complete Right Hub For Limiter Ring(Coulter Disc Blade 15" X 4,00Mm)	1		
30	5204010160-8	Complete Left Hub For Limiter Ring (Plain Disc 15" X 4,00Mm)	1		

Item	Code	Product description	All	Large Right	Small Left
31	5096040002-7	Hub Internal Cap	2		
32	5352030056-9	Internal Left Scraper Of Disc	1		
33	5352030057-7	Internal Right Scraper Of Disc	1		
34	6020310054-2	Hexagonal Head Bolt 3/8" X 1" 16F Unc1A Gr2 Rt	1		
35	6020010406-7	Pressure Washer 3/8" Media Industry	1		
36	5024010075-1	Smooth Washer Ø10,3 X Ø25 X 2,00Mm	2		
37	5024010024-7	Smooth Washer Ø20 X Ø38 X 1,21Mm	6		
38	6020310746-6	Hexagonal Nut 3/8" 16F Unc Gr5 Ch.9/16" Height 8,50Mm	1		
39	5530011577-1	Right Support Of Fertilizer And Seed Large Double Disc (Descentrado)		1	
39	5530011576-3	Left Support Of Large Fertilizer/Seed Large Double Disc			1
40	6020317573-9	Allen Bolt M8 X 1,25 X 25mm Cl12.9 RT	12		
41	6020310454-8	Hexagonal Nut M8 X 1,25 Ma Cl8 Ch.13Mm H.6,50Mm	12		
42	6020010004-5	Pressure Washer M8 Media	12		
43	2857398003-6	Coulter Plain Disc Blade 15 X 4,00 Hc Rd 80Mm + 6H Rd 8,7Mm R=57,5Mm + 6H Rd 6,9Mm	2		
44	5204010149-7	Left Disc Hub	1		
44	5204010150-0	Right Disc Hub	1		
45	5232010076-3	Shaft Ø36 X 94Mm With Left Thread	1		
45	5232010077-1	Shaft Ø36 X 94Mm With Right Thread	1		
46	6020310797-0	Nut 3/4" 16F Unf Gr5 Ch.1.1/16" Height 13,00Mm	2		
47	6020010513-6	Plain Washer Ø20 X Ø35 X 3Mm	2		
48	6020050641-6	Hub Cap	2		
49	6020010095-9	Gascket Ring 047X 052X 2Mm	2		
50	6020350268-3	Retainer Ø36,00 X Ø52,00 X 11,00Mm	2		
51	6020350087-7	Bearing 30204	4		
52	5204010148-9	Hub Of Ø136 X 54Mm	2		
53	6020050101-5	Cotterpin 1/8" X 1"	2		
54	6020010289-7	Retaining Ring I-55	2		
55	6020311038-6	Hexagonal Head Bolt 3/8" X 4" 16F Unc1A Gr2 Rp	4		
56	6020010406-7	Pressure Washer 3/8" Media Industry	4		
57	5124010099-5	Rippled Coulter Disc Row	1		
58	5324050014-7	Complete Adjustment Support Guide	2		
59	6020310746-6	Hexagonal Nut 3/8" 16F Unc Gr5 Ch.9/16" Height 8,50Mm	4		
60	6020050101-5	Cotterpin 1/8" X 1"	1		
61	6020130108-7	Grease Fitting 1/8"	1		

BALDAN

• Table Lateral Row W/Cutting Disc and Compactation Wheel type "V" - Spacing 170mm

Item	Code	Product description	All	Large Right	Small Left
62	5530010406-0	Depth Regulator Support	1		
63	6020310510-2	Heavy Elastic Pin Ø10 X 55Mm	1		
64	6020010406-7	Pressure Washer 3/8" Media Industry	1		
65	6020310472-6	Heavy Elastic Pin Ø6 X 55Mm	1		
66	5432010181-9	French Head Pin Ø11,20 X 90Mm	1		
67	5080020787-5	Bushing Of Ø14 X Ø19 X 65Mm	1		
68	5124010100-2	Cart W/Rippled Coulter Disc Blade	1		
69	6020311038-6	Hexagonal Head Bolt 3/8" X 4" 16F Unc1A Gr2 Rp	1		
70	6020310746-6	Hexagonal Nut 3/8" 16F Unc Gr5 Ch.9/16" Height 8,50Mm	1		
71	5024010107-3	Smooth Washer Ø36 X Ø61 X 5,00Mm	1		
72	6020310822-5	Hexagonal Nut M10 X 1,50 Ma Cl8 Ch.17Mm H.8,00Mm	6		
73	6020310980-9	Hexagonal Head Bolt M10 X 1,50 X 40Mm Cl8.8 Rt	6		
74	3255397388-0	Rippled Plain Disc Blade 14 X 4,00 Hc Rd 80Mm + 6H Rd 10,3Mm D=115Mm Doble Bevel	1		
75	6020010394-0	Pressure Washer M10 Media	6		
76	5284010001-4	Flange Of Disc Hub	1		
77	5530010405-2	Support Of Disc W/Hub	1		
78	6020130108-7	Grease Fitting 1/8"	1		
79	6020050640-8	Hub Cap	1		
80	6020310797-0	Nut 3/4" 16F Unf Gr5 Ch.1.1/16" Height 13,00Mm	1		
81	5530160187-4	Support W/Shaft Of Disc	1		
82	6020350077-0	Bearing 44610/49	2		
83	6020050101-5	Cotterpin 1/8" X 1"	1		
84	6020350244-6	Retainer Ø35,00 X Ø58,00 X 10,00Mm	1		
85	5024010258-4	Smooth Washer Ø20 X Ø38,5 X 3,00Mm	1		
86	5204010090-3	Disc Hub	1		
87	6020190098-3	Gascket Ø50,3 X Ø73,5 X 1/64"	1		
88	6020311000-9	Hexagonal Head Bolt 1/4" X 1/2" 20F Unc1A Gr5 Rt	4		
89	6020010402-4	Pressure Washer 1/4" Media Industry	4		
90	6020390294-0	Lock Nma - Type "R" Ø3,5 X 67Mm(Special)	1		
91	5530016364-4	Lower Support Of Triple Spring	1		
92	6020250667-7	Helical Spring Ø43 X Ø59 X 800Mm External		1	
92	6020250664-2	Helical Spring Ø43 X Ø59 X 700Mm External			1
93	5566010205-0	Rod Of Spring De 1085,5Mm		1	
93	5566040144-9	Rod Of Spring De 935,5Mm			1

Item	Code	Product description	All	Large Right	Small Left
94	6020310349-5	Hexagonal Head Bolt M12 X 1,75 X 30Mm Cl8.8 R Wth Point	2		
95	6020250666-9	Helical Spring Ø27,3 X Ø40 X 800Mm Intermediary		1	
95	6020250663-4	Helical Spring Ø27,3 X Ø40 X 700Mm Intermediary			1
96	5080011663-2	Fixation Support Of Spring Rod	1		
97	6020250665-0	Helical Spring Ø17,5 X Ø25,5 X 800Mm Internal		1	
97	6020250662-6	Helical Spring Ø17,5 X Ø25,5 X 700Mm Internal			1
		Optional			
98	5024010161-8	Smooth Washer Ø7 X Ø18 X 2,00Mm	6		
99	6020310742-3	Hexagonal Nut 1/4" 20F Unc Gr5 Ch.7/16" Height 5,50Mm	6		
100	6020310147-6	Bolt 1/4" X 3/4" 20F Unc1A Gr5 Rt	6		
101	5530014453-4	Left Support Of Scraper		1	
101	5530014452-6	Right Support Of Scraper			1
102	6020310049-6	Hexagonal Head Bolt 1/2" X 2" 12F W Gr5 Rp	2		
103	6010600786-4	Deph Limiter Ring (40Mm)	1		
104	6020311160-9	French Head Bolt 3/8" X 1" 16F Unc1A Gr2 Rt	2		
105	5352010048-9	Limiter Of Limiter Rim	1		
106	5024010068-9	Smooth Washer Ø13,3 X Ø35,5 X 3,00Mm	2		
107	5024010075-1	Smooth Washer Ø10,3 X Ø25 X 2,00Mm	2		
108	6020010406-7	Pressure Washer 3/8" Media Industry	2		
109	6020010410-5	Pressure Washer 1/2" Media Industry	2		
110	6020310746-6	Hexagonal Nut 3/8" 16F Unc Gr5 Ch.9/16" Height 8,50Mm	2		
111	6020310754-7	Hexagonal Nut 1/2" 12F W Gr5 Ch.7/8" Height 12,00Mm	2		
112	6020010402-4	Pressure Washer 1/4" Media Industry	6		
113	5288010055-6	Left Limiter Ring With Scraper (Deph 40Mm)		1	
113	5288010054-8	Right Limiter Ring With Scaper (Deph 40Mm)			1

• Row W/Cutting Disc and Compactation Wheel type "V" - Spacing 250mm

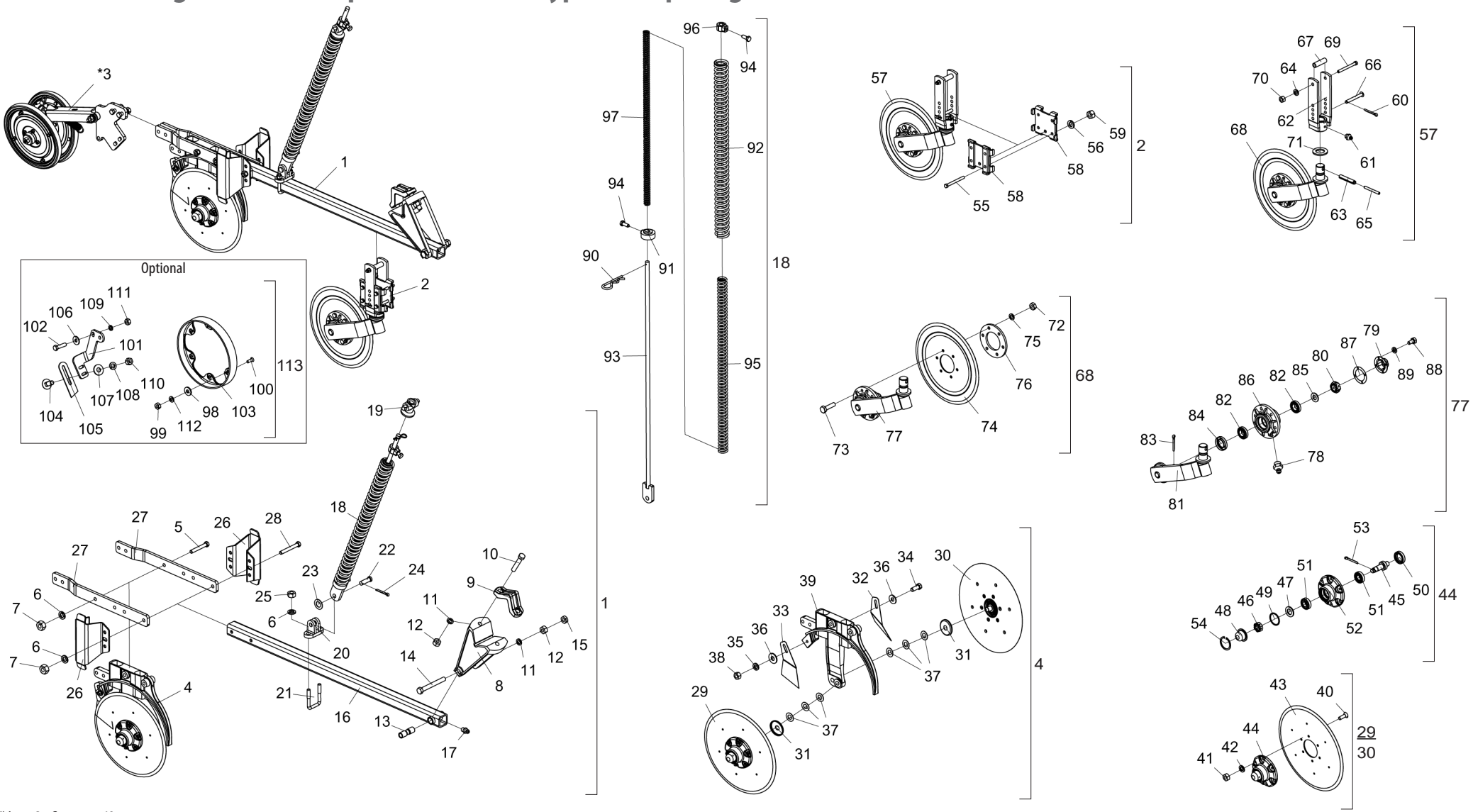

* Item 3 - See page 68

• Table Row W/Cutting Disc and Compactation Wheel type "V" - Spacing 250mm

Item	Code	Product description	All	Small Right	Large Right	Small Left	Large Left
1	2517012381-9	Small Right Row Unit(Spde-A)		1			
1	2517012382-7	Small Right Row Unit(Spde-A)			1		
1	2517012383-5	Small Right Row Unit(Spde-A)				1	
1	2517012384-3	Small Right Row Unit(Spde-A)					1
2	5124010337-4	Complete Cart Of Rippled Coulter Disc Blade	1				
*3	5124010381-1	Complete Cart Of Compactation Wheel Type "V" (Spd)	1				
4	5124010372-2	Complete Cart Of Double Disc Fertilizer/Seed (Excentric) Special		1	1		
4	5124010373-0	Left Cart Of Fertilizer/Seed Double Disc (Excentric) Special				1	1
5	6020311061-0	Hexagonal Head Bolt 1/2" X 3.1/2" 12F W Gr5 Rp		2	4	2	4
6	6020010410-5	Pressure Washer 1/2" Media Industry		6	10	6	10
7	6020310754-7	Hexagonal Nut 1/2" 12F W Gr5 Ch.7/8" Height 12,00Mm		4	8	4	8
8	5252040056-7	Cart Hitch	1				
9	6010601347-3	Fixation Shank Of Coulter Disc	1				
10	6020311079-3	Hexagonal Head Bolt 5/8" X 3.1/2" 11F Unc1A Gr5 Rp	2				
11	6020010412-1	Pressure Washer 5/8" Media Industry	3				
12	6020310760-1	Hexagonal Nut 5/8" 11F Unc Gr5 Ch.1.1/16" Height 15,00Mm	3				
13	5080010539-8	Row Articulation Bushing	1				
14	6020311082-3	Hexagonal Head Bolt 5/8" X 5.1/2" 11F Unc1A Gr5 Rp	1				
15	6020310738-5	Hexagonal Nut 5/8" 11F Unc Gr5 Ch.1.1/16" Height 11,00Mm	1				
16	5572015584-1	Square Beam 0f50 X 1200Mm Complete	1				
17	6020130100-1	Grease Fitting 1/4"	1				
18	5566010260-3	Small Rod Of Spring Of 700Mm Complete		1		1	
18	5566010261-1	Smalll Rod Of Spring Of 800Mm Complete			1		1
19	6010601280-9	Upper Lock Of Triple Spring	1				
20	6010601172-1	Lower Support Of Rod (Small)	1				
21	5068010081-8	Clamp Of 84 X 64 X R.1/2" W	1				
22	6020310593-5	Pin Ø5/8" X 46mm	1				
23	5024010059-0	Smooth Washer Ø16,5 X Ø29 X 1,21Mm	1				
24	6020050101-5	Cotterpin 1/8" X 1"	1				
25	6020310756-3	Hexagonal Nut 1/2" 12F W Gr5 Ch.3/4" Height 11,00Mm	2				
26	5526010035-0	Separator Of Rowas For Espacamento De 250Mm	2				
27	5136015261-1	Fixation Plate Of Double Disc	2				
28	6020311065-3	Hexagonal Head Bolt 1/2" X 4" 12F W Gr5 Rp		2		2	
28	5068010081-8	Clamp Of 84 X 64 X R.1/2" W			2		2
29	5204010159-4	Complete Right Hub For Limiter Ring(Coulter Disc Blade 15" X 4,00Mm)	1				
30	5204010160-8	Complete Left Hub For Limiter Ring (Plain Disc 15" X 4,00Mm)	1				

Item	Code	Product description	All	Small Right	Large Right	Small Left	Large Left
31	5096040002-7	Hub Internal Cap	2				
32	5352030056-9	Internal Left Scraper Of Disc	1				
33	5352030057-7	Internal Right Scraper Of Disc	1				
34	6020310054-2	Hexagonal Head Bolt 3/8" X 1" 16F Unc1A Gr2 Rt	1				
35	6020010406-7	Pressure Washer 3/8" Media Industry	1				
36	5024010075-1	Smooth Washer Ø10,3 X Ø25 X 2,00Mm	2				
37	5024010024-7	Smooth Washer Ø20 X Ø38 X 1,21Mm	6				
38	6020310746-6	Hexagonal Nut 3/8" 16F Unc Gr5 Ch.9/16" Height 8,50Mm	1				
39	5530011577-1	Right Support Of Fertilizer And Seed Large Double Disc (Descentrado)		1	1		
39	5530011576-3	Left Support Of Large Fertilizer/Seed Large Double Disc				1	1
40	6020317573-9	Allen Bolt M8 X 1,25 X 25mm Cl12.9 RT	12				
41	6020310454-8	Hexagonal Nut M8 X 1,25 Ma Cl8 Ch.13Mm H.6,50Mm	12				
42	6020010004-5	Pressure Washer M8 Media	12				
43	2857398003-6	Coulter Plain Disc Blade 15 X 4,00 Hc Rd 80Mm + 6H Rd 8,7Mm R=57,5Mm + 6H Rd 6,9Mm	2				
44	5204010149-7	Left Disc Hub	1				
44	5204010150-0	Right Disc Hub	1				
45	5232010076-3	Shaft Ø36 X 94Mm With Left Thread	1				
45	5232010077-1	Shaft Ø36 X 94Mm With Right Thread	1				
46	6020310797-0	Nut 3/4" 16F Unf Gr5 Ch.1.1/16" Height 13,00Mm	2				
47	6020010513-6	Plain Washer Ø20 X Ø35 X 3Mm	2				
48	6020050641-6	Hub Cap	2				
49	6020010095-9	Gascket Ring 047X 052X 2Mm	2				
50	6020350268-3	Retainer Ø36,00 X Ø52,00 X 11,00Mm	2				
51	6020350087-7	Bearing 30204	4				
52	5204010148-9	Hub Of Ø136 X 54Mm	2				
53	6020050101-5	Cotterpin 1/8" X 1"	2				
54	6020010289-7	Retaining Ring I-55	2				
55	6020311038-6	Hexagonal Head Bolt 3/8" X 4" 16F Unc1A Gr2 Rp	4				
56	6020010406-7	Pressure Washer 3/8" Media Industry	4				
57	5124010099-5	Rippled Coulter Disc Row	1				
58	5324050014-7	Complete Adjustment Support Guide	2				
59	6020310746-6	Hexagonal Nut 3/8" 16F Unc Gr5 Ch.9/16" Height 8,50Mm	4				
60	6020050101-5	Cotterpin 1/8" X 1"	1				
61	6020130108-7	Grease Fitting 1/8"	1				
62	5530010406-0	Depth Regulator Support	1				
63	6020310510-2	Heavy Elastic Pin Ø10 X 55Mm	1				

• Table Row W/Cutting Disc and Compactation Wheel type "V" - Spacing 250mm

Item	Code	Product description	All	Small Right	Large Right	Small Left	Large Left
64	6020010406-7	Pressure Washer 3/8" Media Industry	1				
65	6020310472-6	Heavy Elastic Pin Ø6 X 55Mm	1				
66	5432010181-9	French Head Pin Ø11,20 X 90Mm	1				
67	5080020787-5	Bushing Of Ø14 X Ø19 X 65Mm	1				
68	5124010100-2	Cart W/Rippled Coulter Disc Blade	1				
69	6020311038-6	Hexagonal Head Bolt 3/8" X 4" 16F Unc1A Gr2 Rp	1				
70	6020310746-6	Hexagonal Nut 3/8" 16F Unc Gr5 Ch.9/16" Height 8,50Mm	1				
71	5024010107-3	Smooth Washer Ø36 X Ø61 X 5,00Mm	1				
72	6020310822-5	Hexagonal Nut M10 X 1,50 Ma Cl8 Ch.17Mm H.8,00Mm	6				
73	6020310980-9	Hexagonal Head Bolt M10 X 1,50 X 40Mm Cl8.8 Rt	6				
74	3255397388-0	Rippled Plain Disc Blade 14 X 4,00 Hc Rd 80Mm + 6H Rd 10,3Mm D=115Mm Doble Bevel	1				
75	6020010394-0	Pressure Washer M10 Media	6				
76	5284010001-4	Flange Of Disc Hub	1				
77	5530010405-2	Support Of Disc W/Hub	1				
78	6020130108-7	Grease Fitting 1/8"	1				
79	6020050640-8	Hub Cap	1				
80	6020310797-0	Nut 3/4" 16F Unf Gr5 Ch.1.1/16" Height 13,00Mm	1				
81	5530160187-4	Support W/Shaft Of Disc	1				
82	6020350077-0	Bearing 44610/49	2				
83	6020050101-5	Cotterpin 1/8" X 1"	1				
84	6020350244-6	Retainer Ø35,00 X Ø58,00 X 10,00Mm	1				
85	5024010258-4	Smooth Washer Ø20 X Ø38,5 X 3,00Mm	1				
86	5204010090-3	Disc Hub	1				
87	6020190098-3	Gascket Ø50,3 X Ø73,5 X 1/64"	1				
88	6020311000-9	Hexagonal Head Bolt 1/4" X 1/2" 20F Unc1A Gr5 Rt	4				
89	6020010402-4	Pressure Washer 1/4" Media Industry	4				
90	6020390294-0	Lock Nma - Type "R" Ø3,5 X 67Mm(Special)	1				
91	5530016364-4	Lower Support Of Triple Spring	1				
92	6020250664-2	Helical Spring Ø43 X Ø59 X 700Mm External		1		1	
92	6020250667-7	Helical Spring Ø43 X Ø59 X 800Mm External			1		1
93	5566040144-9	Rod Of Spring De 935,5Mm		1		1	
93	5566010205-0	Rod Of Spring De 1085,5Mm			1		1
94	6020310349-5	Hexagonal Head Bolt M12 X 1,75 X 30Mm Cl8.8 R Wth Point	2				
95	6020250663-4	Helical Spring Ø27,3 X Ø40 X 700Mm Intermediary		1		1	
95	6020250666-9	Helical Spring Ø27,3 X Ø40 X 800Mm Intermediary			1		1
96	5080011663-2	Fixation Support Of Spring Rod	1				

Item	Code	Product description	All	Small Right	Large Right	Small Left	Large Left
97	6020250662-6	Helical Spring Ø17,5 X Ø25,5 X 700Mm Internal		1		1	
97	6020250665-0	Helical Spring Ø17,5 X Ø25,5 X 800Mm Internal			1		1
		Optional					
98	5024010161-8	Smooth Washer Ø7 X Ø18 X 2,00Mm	6				
99	6020310742-3	Hexagonal Nut 1/4" 20F Unc Gr5 Ch.7/16" Height 5,50Mm	6				
100	6020310147-6	Bolt 1/4" X 3/4" 20F Unc1A Gr5 Rt	6				
101	5530014453-4	Left Support Of Scraper		1	1		
101	5530014452-6	Right Support Of Scraper				1	1
102	6020310049-6	Hexagonal Head Bolt 1/2" X 2" 12F W Gr5 Rp	2				
103	6010600786-4	Deph Limiter Ring (40Mm)	1				
104	6020311160-9	French Head Bolt 3/8" X 1" 16F Unc1A Gr2 Rt	2				
105	5352010048-9	Limiter Of Limiter Rim	1				
106	5024010068-9	Smooth Washer Ø13,3 X Ø35,5 X 3,00Mm	2				
107	5024010075-1	Smooth Washer Ø10,3 X Ø25 X 2,00Mm	2				
108	6020010406-7	Pressure Washer 3/8" Media Industry	2				
109	6020010410-5	Pressure Washer 1/2" Media Industry	2				
110	6020310746-6	Hexagonal Nut 3/8" 16F Unc Gr5 Ch.9/16" Height 8,50Mm	2				
111	6020310754-7	Hexagonal Nut 1/2" 12F W Gr5 Ch.7/8" Height 12,00Mm	2				
112	6020010402-4	Pressure Washer 1/4" Media Industry	6				
113	5288010055-6	Left Limiter Ring With Scraper (Deph 40Mm)		1	1		
113	5288010054-8	Right Limiter Ring With Scaper (Deph 40Mm)				1	1

BALDAN

• Lateral Row W/Cutting Disc and Compactation Wheel type "V" - Spacing 250mm

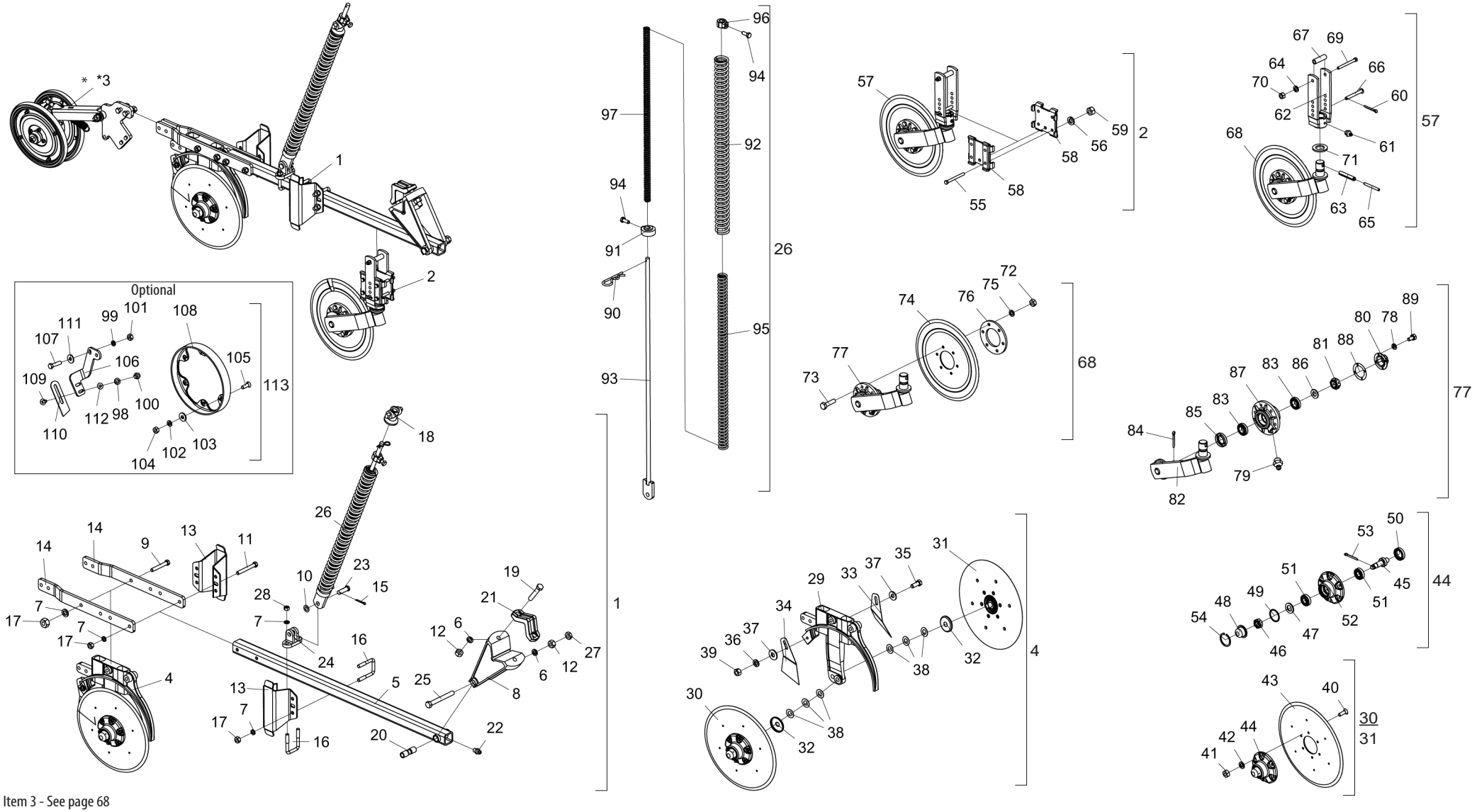

* Item 3 - See page 68

• Table Lateral Row W/Cutting Disc and Compactation Wheel type "V" - Spacing 250mm

Item	Code	Product description	All	Small Right	Small Left
1	2517012458-0	Small Right Lateral Row for Spacing 250mm		1	
1	2517012386-0	Large Right Lateral Row Unit (Spde-A)			1
2	5124010337-4	Complete Cart Of Rippled Coulter Disc Blade	1		
*3	5124010381-1	Complete Cart Of Compactation Wheel Type "V" (Spd)	1		
4	5124010372-2	Complete Cart Of Double Disc Fertilizer/Seed (Excentric) Special		1	
4	5124010373-0	Left Cart Of Fertilizer/Seed Double Disc (Excentric) Special			1
5	5572015584-1	Square Beam Of50 X 1200Mm Complete	1		
6	6020010412-1	Pressure Washer 5/8" Media Industry	3		
7	6020010410-5	Pressure Washer 1/2" Media Industry	10		
8	5252040056-7	Cart Hitch	1		
9	6020311061-0	Hexagonal Head Bolt 1/2" X 3.1/2" 12F W Gr5 Rp	2		
10	5024010059-0	Smooth Washer Ø16,5 X Ø29 X 1,21Mm	1		
11	6020311065-3	Hexagonal Head Bolt 1/2" X 4" 12F W Gr5 Rp	2		
12	6020310760-1	Hexagonal Nut 5/8" 11F Unc Gr5 Ch.1.1/16" Height 15,00Mm	3		
13	5526010018-0	Separator Of Rowas			1
13	5526010035-0	Separator Of Rowas For Espacamento De 250Mm		2	1
14	5136015261-1	Fixation Plate Of Double Disc	2		
15	6020050101-5	Cotterpin 1/8" X 1"	1		
16	5068010081-8	Clamp Of 84 X 64 X R.1/2" W	3		
17	6020310754-7	Hexagonal Nut 1/2" 12F W Gr5 Ch.7/8" Height 12,00Mm	8		
18	6010601280-9	Upper Lock Of Triple Spring	1		
19	6020311079-3	Hexagonal Head Bolt 5/8" X 3.1/2" 11F Unc1A Gr5 Rp	2		
20	5080010539-8	Row Articulation Bushing	1		
21	6010601347-3	Fixation Shank Of Coulter Disc	1		
22	6020130100-1	Grease Fitting 1/4"	1		
23	6020310593-5	Pin Ø5/8" X 46mm	1		
24	6010601172-1	Lower Support Of Rod (Small)	1		
25	6020311082-3	Hexagonal Head Bolt 5/8" X 5.1/2" 11F Unc1A Gr5 Rp	1		
26	5566010260-3	Small Rod Of Spring Of 700Mm Complete	1		
27	6020310738-5	Hexagonal Nut 5/8" 11F Unc Gr5 Ch.1.1/16" Height 11,00Mm	1		
28	6020310756-3	Hexagonal Nut 1/2" 12F W Gr5 Ch.3/4" Height 11,00Mm	2		
29	5530011577-1	Right Support Of Fertilizer And Seed Large Double Disc (Descentrado)		1	
29	5530011576-3	Left Support Of Large Fertilizer/Seed Large Double Disc			1
30	5204010159-4	Complete Right Hub For Limiter Ring(Coulter Disc Blade 15" X 4,00Mm)	1		
31	5204010160-8	Complete Left Hub For Limiter Ring (Plain Disc 15" X 4,00Mm)	1		
32	5096040002-7	Hub Internal Cap	2		

Item	Code	Product description	All	Small Right	Small Left
33	5352030056-9	Internal Left Scraper Of Disc	1		
34	5352030057-7	Internal Right Scraper Of Disc	1		
35	6020310054-2	Hexagonal Head Bolt 3/8" X 1" 16F Unc1A Gr2 Rt	1		
36	6020010406-7	Pressure Washer 3/8" Media Industry	1		
37	5024010075-1	Smooth Washer Ø10,3 X Ø25 X 2,00Mm	2		
38	5024010024-7	Smooth Washer Ø20 X Ø38 X 1,21Mm	6		
39	6020310746-6	Hexagonal Nut 3/8" 16F Unc Gr5 Ch.9/16" Height 8,50Mm	1		
40	6020317573-9	Allen Bolt M8 X 1,25 X 25mm Cl12.9 RT	12		
41	6020310454-8	Hexagonal Nut M8 X 1,25 Ma Cl8 Ch.13Mm H.6,50Mm	12		
42	6020010004-5	Pressure Washer M8 Media	12		
43	2857398003-6	Coulter Plain Disc Blade 15 X 4,00 Hc Rd 80Mm + 6H Rd 8,7Mm R=57,5Mm + 6H Rd 6,9Mm	2		
44	5204010149-7	Left Disc Hub	1		
44	5204010150-0	Right Disc Hub	1		
45	5232010076-3	Shaft Ø36 X 94Mm With Left Thread	1		
45	5232010077-1	Shaft Ø36 X 94Mm With Right Thread	1		
46	6020310797-0	Nut 3/4" 16F Unf Gr5 Ch.1.1/16" Height 13,00Mm	2		
47	6020010513-6	Plain Washer Ø20 X Ø35 X 3Mm	2		
48	6020050641-6	Hub Cap	2		
49	6020010095-9	Gascket Ring 047X 052X 2Mm	2		
50	6020350268-3	Retainer Ø36,00 X Ø52,00 X 11,00Mm	2		
51	6020350087-7	Bearing 30204	4		
52	5204010148-9	Hub Of Ø136 X 54Mm	2		
53	6020050101-5	Cotterpin 1/8" X 1"	2		
54	6020010289-7	Retaining Ring I-55	2		
55	6020311038-6	Hexagonal Head Bolt 3/8" X 4" 16F Unc1A Gr2 Rp	4		
56	6020010406-7	Pressure Washer 3/8" Media Industry	4		
57	5124010099-5	Rippled Coulter Disc Row	1		
58	5324050014-7	Complete Adjustment Support Guide	2		
59	6020310746-6	Hexagonal Nut 3/8" 16F Unc Gr5 Ch.9/16" Height 8,50Mm	4		
60	6020050101-5	Cotterpin 1/8" X 1"	1		
61	6020130108-7	Grease Fitting 1/8"	1		
62	5530010406-0	Depth Regulator Support	1		
63	6020310510-2	Heavy Elastic Pin Ø10 X 55Mm	1		
64	6020010406-7	Pressure Washer 3/8" Media Industry	1		
65	6020310472-6	Heavy Elastic Pin Ø6 X 55Mm	1		
66	5432010181-9	French Head Pin Ø11,20 X 90Mm	1		

BALDAN

• Table Lateral Row W/Cutting Disc and Compactation Wheel type "V" - Spacing 250mm

Item	Code	Product description	All	Small Right	Small Left
67	5080020787-5	Bushing Of Ø14 X Ø19 X 65Mm	1		
68	5124010100-2	Cart W/Rippled Coulter Disc Blade	1		
69	6020311038-6	Hexagonal Head Bolt 3/8" X 4" 16F Unc1A Gr2 Rp	1		
70	6020310746-6	Hexagonal Nut 3/8" 16F Unc Gr5 Ch.9/16" Height 8,50Mm	1		
71	5024010107-3	Smooth Washer Ø36 X Ø61 X 5,00Mm	1		
72	6020310822-5	Hexagonal Nut M10 X 1,50 Ma Cl8 Ch.17Mm H.8,00Mm	6		
73	6020310980-9	Hexagonal Head Bolt M10 X 1,50 X 40Mm Cl8.8 Rt	6		
74	3255397388-0	Rippled Plain Disc Blade 14 X 4,00 Hc Rd 80Mm + 6H Rd 10,3Mm D=115Mm Doble Bevel	1		
75	6020010394-0	Pressure Washer M10 Media	6		
76	5284010001-4	Flange Of Disc Hub	1		
77	5530010405-2	Support Of Disc W/Hub	1		
78	6020010402-4	Pressure Washer 1/4" Media Industry	4		
79	6020130108-7	Grease Fitting 1/8"	1		
80	6020050640-8	Hub Cap	1		
81	6020310797-0	Nut 3/4" 16F Unf Gr5 Ch.1.1/16" Height 13,00Mm	1		
82	5530160187-4	Support W/Shaft Of Disc	1		
83	6020350077-0	Bearing 44610/49	2		
84	6020050101-5	Cotterpin 1/8" X 1"	1		
85	6020350244-6	Retainer Ø35,00 X Ø58,00 X 10,00Mm	1		
86	5024010258-4	Smooth Washer Ø20 X Ø38,5 X 3,00Mm	1		
87	5204010090-3	Disc Hub	1		
88	6020190098-3	Gascket Ø50,3 X Ø73,5 X 1/64"	1		
89	6020311000-9	Hexagonal Head Bolt 1/4" X 1/2" 20F Unc1A Gr5 Rt	4		
90	6020390294-0	Lock Nma - Type "R" Ø3,5 X 67Mm(Special)	1		
91	5530016364-4	Lower Support Of Triple Spring	1		
92	6020250664-2	Helical Spring Ø43 X Ø59 X 700Mm External	1		
93	5566040144-9	Rod Of Spring De 935,5Mm	1		
94	6020310349-5	Hexagonal Head Bolt M12 X 1,75 X 30Mm Cl8.8 R Wth Point	2		
95	6020250663-4	Helical Spring Ø27,3 X Ø40 X 700Mm Intermediary	1		
96	5080011663-2	Fixation Support Of Spring Rod	1		
97	6020250662-6	Helical Spring Ø17,5 X Ø25,5 X 700Mm Internal	1		
		Optional			
98	6020010406-7	Pressure Washer 3/8" Media Industry	2		
99	6020010410-5	Pressure Washer 1/2" Media Industry	2		
100	6020310746-6	Hexagonal Nut 3/8" 16F Unc Gr5 Ch.9/16" Height 8,50Mm	2		
101	6020310754-7	Hexagonal Nut 1/2" 12F W Gr5 Ch.7/8" Height 12,00Mm	2		
102	6020010402-4	Pressure Washer 1/4" Media Industry	6		

Item	Code	Product description	All	Small Right	Small Left
103	5024010161-8	Smooth Washer Ø7 X Ø18 X 2,00Mm	6		
104	6020310742-3	Hexagonal Nut 1/4" 20F Unc Gr5 Ch.7/16" Height 5,50Mm	6		
105	6020310147-6	Bolt 1/4" X 3/4" 20F Unc1A Gr5 Rt	6		
106	5530014453-4	Left Support Of Scraper		1	
106	5530014452-6	Right Support Of Scraper			1
107	6020310049-6	Hexagonal Head Bolt 1/2" X 2" 12F W Gr5 Rp	2		
108	6010600786-4	Deph Limiter Ring (40Mm)	1		
109	6020311160-9	French Head Bolt 3/8" X 1" 16F Unc1A Gr2 Rt	2		
110	5352010048-9	Limiter Of Limiter Rim	1		
111	5024010068-9	Smooth Washer Ø13,3 X Ø35,5 X 3,00Mm	2		
112	5024010075-1	Smooth Washer Ø10,3 X Ø25 X 2,00Mm	2		
113	5288010055-6	Left Limiter Ring With Scraper (Deph 40Mm)		1	
113	5288010054-8	Right Limiter Ring With Scaper (Deph 40Mm)			1

• Row W/Cutting Disc and Concave Depth Wheel W/Regulator Support(Frieze 40mm) - Spacing 170mm

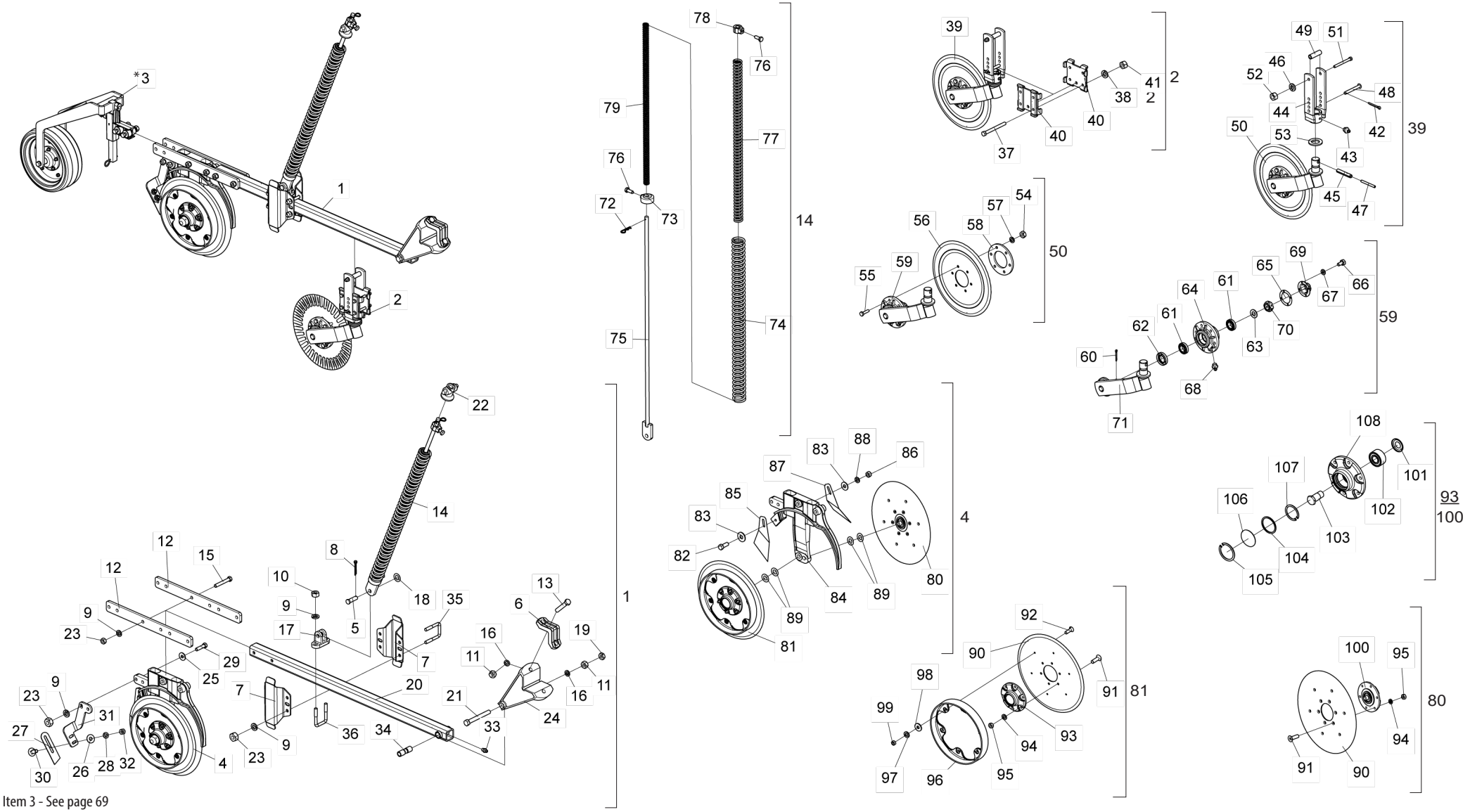

* Item 3 - See page 69

• Table Row W/Cutting Disc and Concave Depth Wheel W/Regulator Support(Frieze 40mm) - Spacing 170mm

Item	Code	Product description	All	Smaller Right	Larger Right	Smaller Left	Larger Left
1	2517012326-6	Small Right Row Unit W/Frieze De 40mm(Spde-A)		1			
1	2517012327-4	Large Right Row Unit W/Frieze De 40mm(Spde-A)			1		
1	2517012328-2	Small Left Row Unit W/Frieze De 40mm(Spde-A)				1	
1	2517012329-0	Large Left Row Unit W/Frieze De 40mm(Spde-A)					1
2	5124010337-4	Complete Cart Of Rippled Coulter Disc Blade	1				
*3	5124010488-5	Large Row Of Concave Depth Wheel With Regulation Support	1				
4	5124018021-2	Double Fertilizer/Seed Disc Right Cart with 40mm Groove (Off-Centered) Special		1	1		
4	5124018022-0	Left Double Fertilizer/Seed Disc Cart with 40mm Groove (Off-Centered) Special				1	1
5	6020310593-5	Pin Ø5/8" X 46mm	1				
6	6010601347-3	Fixation Shank Of Coulter Disc	1				
7	5526010018-0	Separator Of Rowas	2				
8	6020050101-5	Cotterpin 1/8" X 1"	1				
8	6020050101-5	Cotterpin 1/8" X 1"	1				
8	6020050101-5	Cotterpin 1/8" X 1"	1				
9	6020010410-5	Pressure Washer 1/2" Media Industry		8	12	8	12
10	6020310756-3	Hexagonal Nut 1/2" 12F W Gr5 Ch.3/4" Height 11,00mm	2				
11	6020310760-1	Hexagonal Nut 5/8" 11F Unc Gr5 Ch.1.1/16" Height 15,00mm	3				
12	5136016691-4	Plate Of50 X 12 X 518mm	2				
13	6020311079-3	Hexagonal Head Bolt 5/8" X 3.1/2" 11F Unc1A Gr5 Rp	2				
14	5566010260-3	Small Rod Of Spring Of 700mm Complete		1		1	
14	5566010261-1	Smalll Rod Of Spring Of 800mm Complete			1		1
15	6020311061-0	Hexagonal Head Bolt 1/2" X 3.1/2" 12F W Gr5 Rp		2	4	2	4
16	6020010412-1	Pressure Washer 5/8" Media Industry	3				
17	6010601172-1	Lower Support Of Rod (Small)	1				
18	5024010059-0	Smooth Washer Ø16,5 X Ø29 X 1,21mm	1				
19	6020310738-5	Hexagonal Nut 5/8" 11F Unc Gr5 Ch.1.1/16" Height 11,00mm	1				
20	5572015584-1	Square Beam Of50 X 1200mm Complete	1				
21	6020311082-3	Hexagonal Head Bolt 5/8" X 5.1/2" 11F Unc1A Gr5 Rp	1				
22	6010601280-9	Upper Lock Of Triple Spring	1				
23	6020310754-7	Hexagonal Nut 1/2" 12F W Gr5 Ch.7/8" Height 12,00mm		6	10	6	10
24	5252040056-7	Cart Hitch	1				
25	5024010068-9	Smooth Washer Ø13,3 X Ø35,5 X 3,00mm	2				
26	5024010075-1	Smooth Washer Ø10,3 X Ø25 X 2,00mm	2				
26	5024010075-1	Smooth Washer Ø10,3 X Ø25 X 2,00mm	2				
27	5352010048-9	Limiter Of Limiter Rim	1				
28	6020010406-7	Pressure Washer 3/8" Media Industry	1				
28	6020010406-7	Pressure Washer 3/8" Media Industry	2				
28	6020010406-7	Pressure Washer 3/8" Media Industry	4				
28	6020010406-7	Pressure Washer 3/8" Media Industry	1				
29	6020310049-6	Hexagonal Head Bolt 1/2" X 2" 12F W Gr5 Rp	2				
30	6020311160-9	French Head Bolt 3/8" X 1" 16F Unc1A Gr2 Rt	2				
31	5530014453-4	Left Support Of Scraper		1	1		
31	5530014452-6	Right Support Of Scraper				1	1
32	6020310746-6	Hexagonal Nut 3/8" 16F Unc Gr5 Ch.9/16" Height 8,50mm	1				

Item	Code	Product description	All	Smaller Right	Larger Right	Smaller Left	Larger Left
32	6020310746-6	Hexagonal Nut 3/8" 16F Unc Gr5 Ch.9/16" Height 8,50mm	2				
32	6020310746-6	Hexagonal Nut 3/8" 16F Unc Gr5 Ch.9/16" Height 8,50mm	4				
32	6020310746-6	Hexagonal Nut 3/8" 16F Unc Gr5 Ch.9/16" Height 8,50mm	1				
33	6020130100-1	Grease Fitting 1/4"	1				
34	5080010539-8	Row Articulation Bushing	1				
35	5068010081-8	Clamp Of 84 X 64 X R.1/2" W	1				
35	5068010081-8	Clamp Of 84 X 64 X R.1/2" W			2		2
36	6020311065-3	Hexagonal Head Bolt 1/2" X 4" 12F W Gr5 Rp		2		2	
37	6020311038-6	Hexagonal Head Bolt 3/8" X 4" 16F Unc1A Gr2 Rp	4				
37	6020311038-6	Hexagonal Head Bolt 3/8" X 4" 16F Unc1A Gr2 Rp	1				
39	5124010099-5	Rippled Coulter Disc Row	1				
40	5324050014-7	Complete Adjustment Support Guide	2				
43	6020130108-7	Grease Fitting 1/8"	1				
43	6020130108-7	Grease Fitting 1/8"	1				
44	5530010406-0	Depth Regulator Support	1				
45	6020310510-2	Heavy Elastic Pin Ø10 X 55mm	1				
47	6020310472-6	Heavy Elastic Pin Ø6 X 55mm	1				
48	5432010181-9	French Head Pin Ø11,20 X 90mm	1				
49	5080020787-5	Bushing Of Ø14 X Ø19 X 65mm	1				
50	5124010100-2	Cart W/Rippled Coulter Disc Blade	1				
53	5024010107-3	Smooth Washer Ø36 X Ø61 X 5,00mm	1				
54	6020310822-5	Hexagonal Nut M10 X 1,50 Ma Cl8 Ch.17mm H.8,00mm	6				
55	6020310980-9	Hexagonal Head Bolt M10 X 1,50 X 40mm Cl8.8 Rt	6				
56	3255397388-0	Rippled Plain Disc Blade 14 X 4,00 Hc Rd 80mm + 6H Rd 10,3mm D=115mm Doble Bevel	1				
57	6020010394-0	Pressure Washer M10 Media	6				
58	5284010001-4	Flange Of Disc Hub	1				
59	5530010405-2	Support Of Disc W/Hub	1				
61	6020350077-0	Bearing 44610/49	2				
62	6020350244-6	Retainer Ø35,00 X Ø58,00 X 10,00mm	1				
63	5024010258-4	Smooth Washer Ø20 X Ø38,5 X 3,00mm	1				
64	5204010090-3	Disc Hub	1				
65	6020190098-3	Gascket Ø50,3 X Ø73,5 X 1/64"	1				
66	6020311000-9	Hexagonal Head Bolt 1/4" X 1/2" 20F Unc1A Gr5 Rt	4				
67	6020010402-4	Pressure Washer 1/4" Media Industry	4				
69	6020050640-8	Hub Cap	1				
70	6020310797-0	Nut 3/4" 16F Unf Gr5 Ch.1.1/16" Height 13,00mm	1				
71	5530160187-4	Support W/Shaft Of Disc	1				
72	6020390294-0	Lock Nma - Type "R" Ø3,5 X 67mm(Special)	1				
73	5530016364-4	Lower Support Of Triple Spring	1				
74	6020250664-2	Helical Spring Ø43 X Ø59 X 700mm External		1		1	
74	6020250667-7	Helical Spring Ø43 X Ø59 X 800mm External			1		1
75	5566040144-9	Rod Of Spring De 935,5mm		1		1	
75	5566010205-0	Rod Of Spring De 1085,5mm			1		1
76	6020310349-5	Hexagonal Head Bolt M12 X 1,75 X 30mm Cl8.8 R Wth Point	2				

• Table Row W/Cutting Disc and Concave Depth Wheel W/Regulator Support(Frieze 40mm) - Spacing 170mm

Item	Código	Descrição do Produto	Todos	Smaller Right	Larger Right	Smaller Left	Larger Left
77	6020250663-4	Helical Spring Ø27,3 X Ø40 X 700mm Intermediary		1		1	
77	6020250666-9	Helical Spring Ø27,3 X Ø40 X 800mm Intermediary			1		1
78	5080011663-2	Fixation Support Of Spring Rod	1				
79	6020250662-6	Helical Spring Ø17,5 X Ø25,5 X 700mm Internal		1		1	
79	6020250665-0	Helical Spring Ø17,5 X Ø25,5 X 800mm Internal			1		1
80	5204010576-0	Complete Right Hub (Smooth Flat Disc 15" X 4.00mm)		1	1		
80	5204010577-8	Complete Left Hub (Smooth Flat Disc 15" X 4.00M)				1	1
81	5204010579-4	Complete Left Hub WITH/Limiting Strip 40mm (Smooth Flat Disc 15" X 4.00mm)		1	1		
81	5204010578-6	Complete Right Hub with 40mm Limiting Strip (15" X 4.00mm Smooth Flat Disc)				1	1
82	6020310054-2	Hexagonal Head Bolt 3/8" X 1" 16F Unc1A Gr2 Rt	1				
84	5530011577-1	Right Support Of Fertilizer And Seed Large Double Disc (Descentrado)		1	1		
84	5530011576-3	Left Support Of Large Fertilizer/Seed Large Double Disc				1	1
85	5352030057-7	Internal Right Scraper Of Disc	1				
87	5352030056-9	Internal Left Scraper Of Disc	1				
89	5024010024-7	Smooth Washer Ø20 X Ø38 X 1,21mm	4				
90	2857398003-6	Coulter Plain Disc Blade 15 X 4,00 Hc Rd 80mm + 6H Rd 8,7mm R=57,5mm + 6H Rd 6,9mm	1				
90	2857398003-6	Coulter Plain Disc Blade 15 X 4,00 Hc Rd 80mm + 6H Rd 8,7mm R=57,5mm + 6H Rd 6,9mm	1				
91	6020317573-9	Allen Bolt M8 X 1,25 X 25mm Cl12.9 RT	6				
91	6020317573-9	Allen Bolt M8 X 1,25 X 25mm Cl12.9 RT	6				
92	6020317441-4	Bolt M6 X 1,00 X 20mm Cl8.8 Rt	6				
93	5204010451-8	Right Disc Hub		1	1		
93	5204010451-8	Right Disc Hub				1	1
94	6020010004-5	Pressure Washer M8 Media	6				
94	6020010004-5	Pressure Washer M8 Media	6				
95	6020310454-8	Hexagonal Nut M8 X 1,25 Ma Cl8 Ch.13mm H.6,50mm	6				
95	6020310454-8	Hexagonal Nut M8 X 1,25 Ma Cl8 Ch.13mm H.6,50mm	6				
96	6010600786-4	Deph Limiter Ring (40mm)	1				
97	6020010122-0	Pressure Washer M6 Media	6				
98	5024010161-8	Smooth Washer Ø7 X Ø18 X 2,00mm	6				
99	6020311257-5	Hexagonal Nut M6 X 1,00 Ma Cl8 Ch.10mm H.5,00mm	6				
100	5204010452-6	Left Disc Hub		1	1		
100	5204010452-6	Left Disc Hub				1	1
101	6020056005-4	Double Row Ball Bearing Hubcap 5204Kp52-Sp6 (1st row)	1				
102	6020350933-5	Double Row Ball Bearing 5204Kp52-Sp6(First Row)	1				
103	5420010099-1	Hex Head Screw 3/4" X 1.7/8" 16F Unf 1A Gr5 Rp-Left Hand Thread (Special)		1	1		
103	5420010098-3	Hex Head Screw 3/4" X 1.7/8" 16F Unf 1A Gr5 Rp-Right Hand Thread (Special)				1	1
104	6020010095-9	Gascket Ring 047X 052X 2mm	1				
105	6020010289-7	Retaining Ring I-55	1				
106	5096010050-3	Hub Cap	1				
107	6020011053-9	Retaining Ring I-047 G-502-047-01	1				
108	5204010453-4	Cube Ø136 X 41mm	1				

• Lateral Row W/Cutting Disc and Concave Depth Wheel W/Regulator Support(Frieze 40mm) - Spacing 170mm

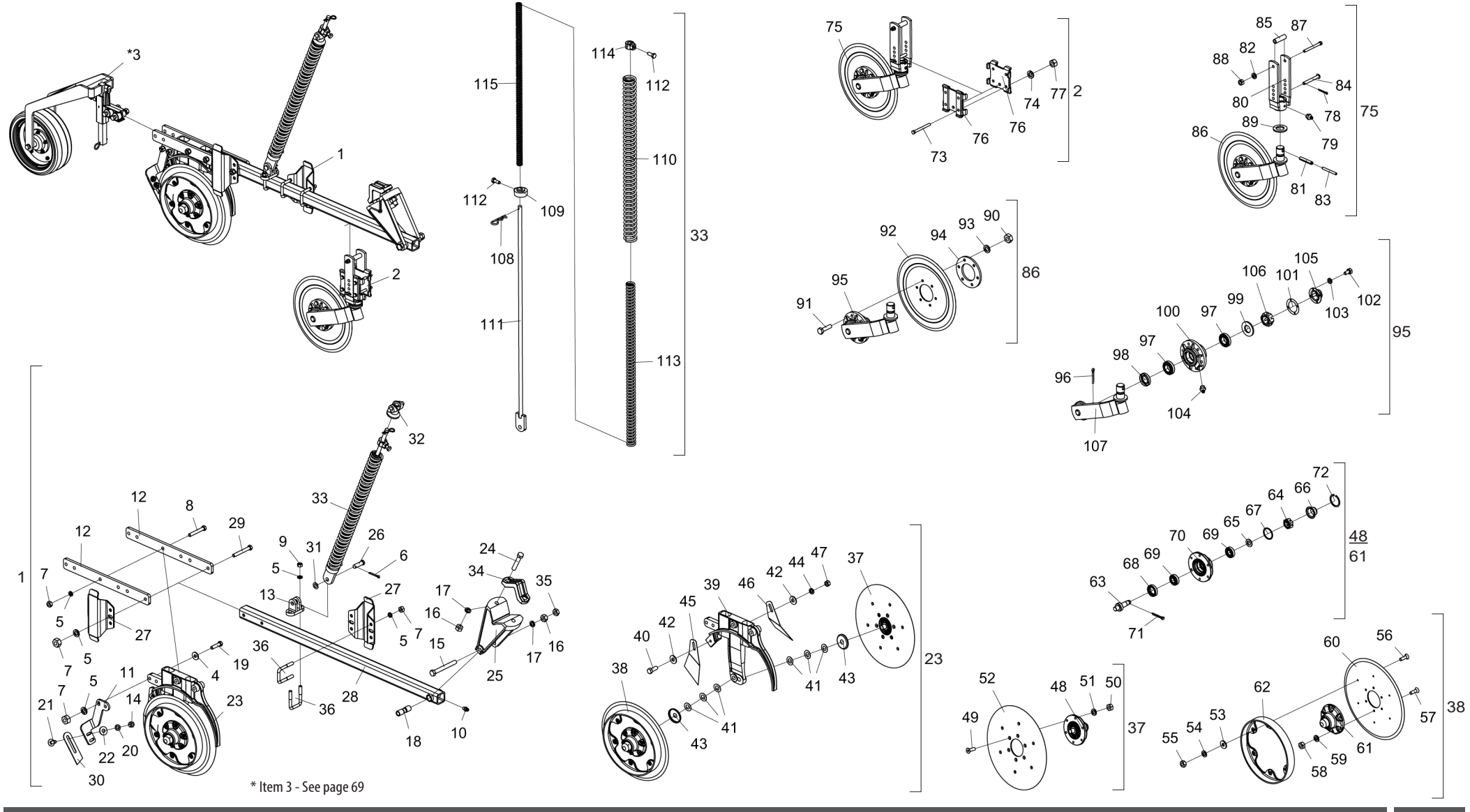

• Table Lateral Row W/Cutting Disc and Concave Depth Wheel W/Regulator Support(Frieze 40mm) - Spacing 170mm

Item	Code	Product description	All	Large Right	Small Left
1	2517012330-4	Large Right Lateral Row Unit W/Frieze De 40Mm(Spde-A)		1	
1	2517012331-2	Small Left Lateral Row Unitr W/Frieze De 40Mm(Spde-A)			1
2	5124010337-4	Complete Cart Of Rippled Coulter Disc Blade	1		
*3	5124010488-5	Large Row Of Concave Depth Wheel With Regulation Support	1		
4	5024010068-9	Smooth Washer Ø13,3 X Ø35,5 X 3,00Mm	2		
5	6020010410-5	Pressure Washer 1/2" Media Industry		16	12
6	6020050101-5	Cotterpin 1/8" X 1"	1		
7	6020310754-7	Hexagonal Nut 1/2" 12F W Gr5 Ch.7/8" Height 12,00Mm		14	10
8	6020311061-0	Hexagonal Head Bolt 1/2" X 3.1/2" 12F W Gr5 Rp		4	2
9	6020310756-3	Hexagonal Nut 1/2" 12F W Gr5 Ch.3/4" Height 11,00Mm	2		
10	6020130100-1	Grease Fitting 1/4"	1		
11	5530014453-4	Left Support Of Scraper		1	
11	5530014452-6	Right Support Of Scraper			1
12	5136016691-4	Plate Of50 X 12 X 518Mm	2		
13	6010601172-1	Lower Support Of Rod (Small)	1		
14	6020310746-6	Hexagonal Nut 3/8" 16F Unc Gr5 Ch.9/16" Height 8,50Mm	2		
15	6020311082-3	Hexagonal Head Bolt 5/8" X 5.1/2" 11F Unc1A Gr5 Rp	1		
16	6020310760-1	Hexagonal Nut 5/8" 11F Unc Gr5 Ch.1.1/16" Height 15,00Mm	3		
17	6020010412-1	Pressure Washer 5/8" Media Industry	3		
18	5080010539-8	Row Articulation Bushing	1		
19	6020310049-6	Hexagonal Head Bolt 1/2" X 2" 12F W Gr5 Rp	2		
20	6020010406-7	Pressure Washer 3/8" Media Industry	2		
21	6020311160-9	French Head Bolt 3/8" X 1" 16F Unc1A Gr2 Rt	2		
22	5024010075-1	Smooth Washer Ø10,3 X Ø25 X 2,00Mm	2		
23	5124010822-8	Fertilizer/Seed Double Disc Right Cart W/Frieze 40Mm(Decentered) Special		1	
23	5124010823-6	Fertilizer/Seed Double Disc Left Cart W/Frieze 40Mm(Decentered) Special			1
24	6020311079-3	Hexagonal Head Bolt 5/8" X 3.1/2" 11F Unc1A Gr5 Rp	2		
25	5252040056-7	Cart Hitch	1		
26	6020310593-5	Pin Ø5/8" X 46mm	1		
27	5526010018-0	Separator Of Rowas	2		
28	5572015584-1	Square Beam Of50 X 1200Mm Complete	1		
29	5068010081-8	Clamp Of 84 X 64 X R.1/2" W		2	
29	6020311065-3	Hexagonal Head Bolt 1/2" X 4" 12F W Gr5 Rp			2
30	5352010048-9	Limiter Of Limiter Rim	1		
31	5024010059-0	Smooth Washer Ø16,5 X Ø29 X 1,21Mm	1		
32	6010601280-9	Upper Lock Of Triple Spring	1		
33	5566010261-1	Smalll Rod Of Spring Of 800Mm Complete		1	
33	5566010260-3	Small Rod Of Spring Of 700Mm Complete			1
34	6010601347-3	Fixation Shank Of Coulter Disc	1		
35	6020310738-5	Hexagonal Nut 5/8" 11F Unc Gr5 Ch.1.1/16" Height 11,00Mm	1		
36	5068010081-8	Clamp Of 84 X 64 X R.1/2" W	2		
37	5204010160-8	Complete Left Hub For Limiter Ring (Plain Disc 15" X 4,00Mm)		1	
37	5204010159-4	Complete Right Hub For Limiter Ring(Coulter Disc Blade 15" X 4,00Mm)			1
38	5204010507-7	Complete Right Hub W/Limiter Frieze 40Mm(Plan Disc 15" X 4,00Mm)		1	
38	5204010508-5	Complete Left Hub W/Limiter Frieze 40Mm(Plan Disc 15" X 4,00Mm)			1
39	5530011576-3	Left Support Of Large Fertilizer/Seed Large Double Disc		1	
39	5530011577-1	Right Support Of Fertilizer And Seed Large Double Disc (Descentrado)			1
40	6020310054-2	Hexagonal Head Bolt 3/8" X 1" 16F Unc1A Gr2 Rt	1		
41	5024010024-7	Smooth Washer Ø20 X Ø38 X 1,21Mm	6		
42	5024010075-1	Smooth Washer Ø10,3 X Ø25 X 2,00Mm	2		
43	5096040002-7	Hub Internal Cap	2		
44	6020010406-7	Pressure Washer 3/8" Media Industry	1		
45	5352030057-7	Internal Right Scraper Of Disc	1		
46	5352030056-9	Internal Left Scraper Of Disc	1		
47	6020310746-6	Hexagonal Nut 3/8" 16F Unc Gr5 Ch.9/16" Height 8,50Mm	1		
48	5204010149-7	Left Disc Hub		1	
48	5204010150-0	Right Disc Hub			1
49	6020317573-9	Allen Bolt M8 X 1,25 X 25mm Cl12.9 RT	6		
50	6020310454-8	Hexagonal Nut M8 X 1,25 Ma Cl8 Ch.13Mm H.6,50Mm	6		
51	6020010004-5	Pressure Washer M8 Media	6		
52	2857398003-6	Coulter Plain Disc Blade 15 X 4,00 Hc Rd 80Mm + 6H Rd 8,7Mm R=57,5Mm + 6H Rd 6,9Mm	1		
53	5024010161-8	Smooth Washer Ø7 X Ø18 X 2,00Mm	6		
54	6020010122-0	Pressure Washer M6 Media	6		
55	6020311257-5	Hexagonal Nut M6 X 1,00 Ma Cl8 Ch.10Mm H.5,00Mm	6		
56	6020317441-4	Bolt M6 X 1,00 X 20Mm Cl8.8 Rt	6		
57	6020317573-9	Allen Bolt M8 X 1,25 X 25mm Cl12.9 RT	6		
58	6020310454-8	Hexagonal Nut M8 X 1,25 Ma Cl8 Ch.13Mm H.6,50Mm	6		
59	6020010004-5	Pressure Washer M8 Media	6		
60	2857398003-6	Coulter Plain Disc Blade 15 X 4,00 Hc Rd 80Mm + 6H Rd 8,7Mm R=57,5Mm + 6H Rd 6,9Mm	1		
61	5204010150-0	Right Disc Hub		1	
61	5204010149-7	Left Disc Hub			1
62	6010600786-4	Deph Limiter Ring (40Mm)	1		

• Table Lateral Row W/Cutting Disc and Concave Depth Wheel W/Regulator Support(Frieze 40mm) - Spacing 170mm

Item	Code	Product description	All	Large Right	Small Left
63	5232010076-3	Shaft Ø36 X 94Mm With Left Thread	1		
63	5232010077-1	Shaft Ø36 X 94Mm With Right Thread	1		
64	6020310797-0	Nut 3/4" 16F Unf Gr5 Ch.1.1/16" Height 13,00Mm	2		
65	6020010513-6	Plain Washer Ø20 X Ø35 X 3Mm	2		
66	6020050641-6	Hub Cap	2		
67	6020010095-9	Gascket Ring 047X 052X 2Mm	2		
68	6020350268-3	Retainer Ø36,00 X Ø52,00 X 11,00Mm	2		
69	6020350087-7	Bearing 30204	4		
70	5204010148-9	Hub Of Ø136 X 54Mm	2		
71	6020050101-5	Cotterpin 1/8" X 1"	2		
72	6020010289-7	Retaining Ring I-55	2		
73	6020311038-6	Hexagonal Head Bolt 3/8" X 4" 16F Unc1A Gr2 Rp	4		
74	6020010406-7	Pressure Washer 3/8" Media Industry	4		
75	5124010099-5	Rippled Coulter Disc Row	1		
76	5324050014-7	Complete Adjustment Support Guide	2		
77	6020310746-6	Hexagonal Nut 3/8" 16F Unc Gr5 Ch.9/16" Height 8,50Mm	4		
78	6020050101-5	Cotterpin 1/8" X 1"	1		
79	6020130108-7	Grease Fitting 1/8"	1		
80	5530010406-0	Depth Regulator Support	1		
81	6020310510-2	Heavy Elastic Pin Ø10 X 55Mm	1		
82	6020010406-7	Pressure Washer 3/8" Media Industry	1		
83	6020310472-6	Heavy Elastic Pin Ø6 X 55Mm	1		
84	5432010181-9	French Head Pin Ø11,20 X 90Mm	1		
85	5080020787-5	Bushing Of Ø14 X Ø19 X 65Mm	1		
86	5124010100-2	Cart W/Rippled Coulter Disc Blade	1		
87	6020311038-6	Hexagonal Head Bolt 3/8" X 4" 16F Unc1A Gr2 Rp	1		
88	6020310746-6	Hexagonal Nut 3/8" 16F Unc Gr5 Ch.9/16" Height 8,50Mm	1		
89	5024010107-3	Smooth Washer Ø36 X Ø61 X 5,00Mm	1		
90	6020310822-5	Hexagonal Nut M10 X 1,50 Ma Cl8 Ch.17Mm H.8,00Mm	6		
91	6020310980-9	Hexagonal Head Bolt M10 X 1,50 X 40Mm Cl8.8 Rt	6		
92	3255397388-0	Rippled Plain Disc Blade 14 X 4,00 Hc Rd 80Mm + 6H Rd 10,3Mm D=115Mm Doble Bevel	1		
93	6020010394-0	Pressure Washer M10 Media	6		
94	5284010001-4	Flange Of Disc Hub	1		
95	5530010405-2	Support Of Disc W/Hub	1		
96	6020050101-5	Cotterpin 1/8" X 1"	1		
97	6020350077-0	Bearing 44610/49	2		

Item	Code	Product description	All	Large Right	Small Left
98	6020350244-6	Retainer Ø35,00 X Ø58,00 X 10,00Mm	1		
99	5024010258-4	Smooth Washer Ø20 X Ø38,5 X 3,00Mm	1		
100	5204010090-3	Disc Hub	1		
101	6020190098-3	Gascket Ø50,3 X Ø73,5 X 1/64"	1		
102	6020311000-9	Hexagonal Head Bolt 1/4" X 1/2" 20F Unc1A Gr5 Rt	4		
103	6020010402-4	Pressure Washer 1/4" Media Industry	4		
104	6020130108-7	Grease Fitting 1/8"	1		
105	6020050640-8	Hub Cap	1		
106	6020310797-0	Nut 3/4" 16F Unf Gr5 Ch.1.1/16" Height 13,00Mm	1		
107	5530160187-4	Support W/Shaft Of Disc	1		
108	6020390294-0	Lock Nma - Type "R" Ø3,5 X 67Mm(Special)	1		
109	5530016364-4	Lower Support Of Triple Spring	1		
110	6020250664-2	Helical Spring Ø43 X Ø59 X 700Mm External			1
110	6020250667-7	Helical Spring Ø43 X Ø59 X 800Mm External		1	
111	5566040144-9	Rod Of Spring De 935,5Mm			1
111	5566010205-0	Rod Of Spring De 1085,5Mm		1	
112	6020310349-5	Hexagonal Head Bolt M12 X 1,75 X 30Mm Cl8.8 R Wth Point	2		
113	6020250663-4	Helical Spring Ø27,3 X Ø40 X 700Mm Intermediary			1
113	6020250666-9	Helical Spring Ø27,3 X Ø40 X 800Mm Intermediary		1	
114	5080011663-2	Fixation Support Of Spring Rod	1		
115	6020250662-6	Helical Spring Ø17,5 X Ø25,5 X 700Mm Internal			1
115	6020250665-0	Helical Spring Ø17,5 X Ø25,5 X 800Mm Internal		1	

• Row W/ Heavy Iron Compaction Wheel - Spacing 170mm

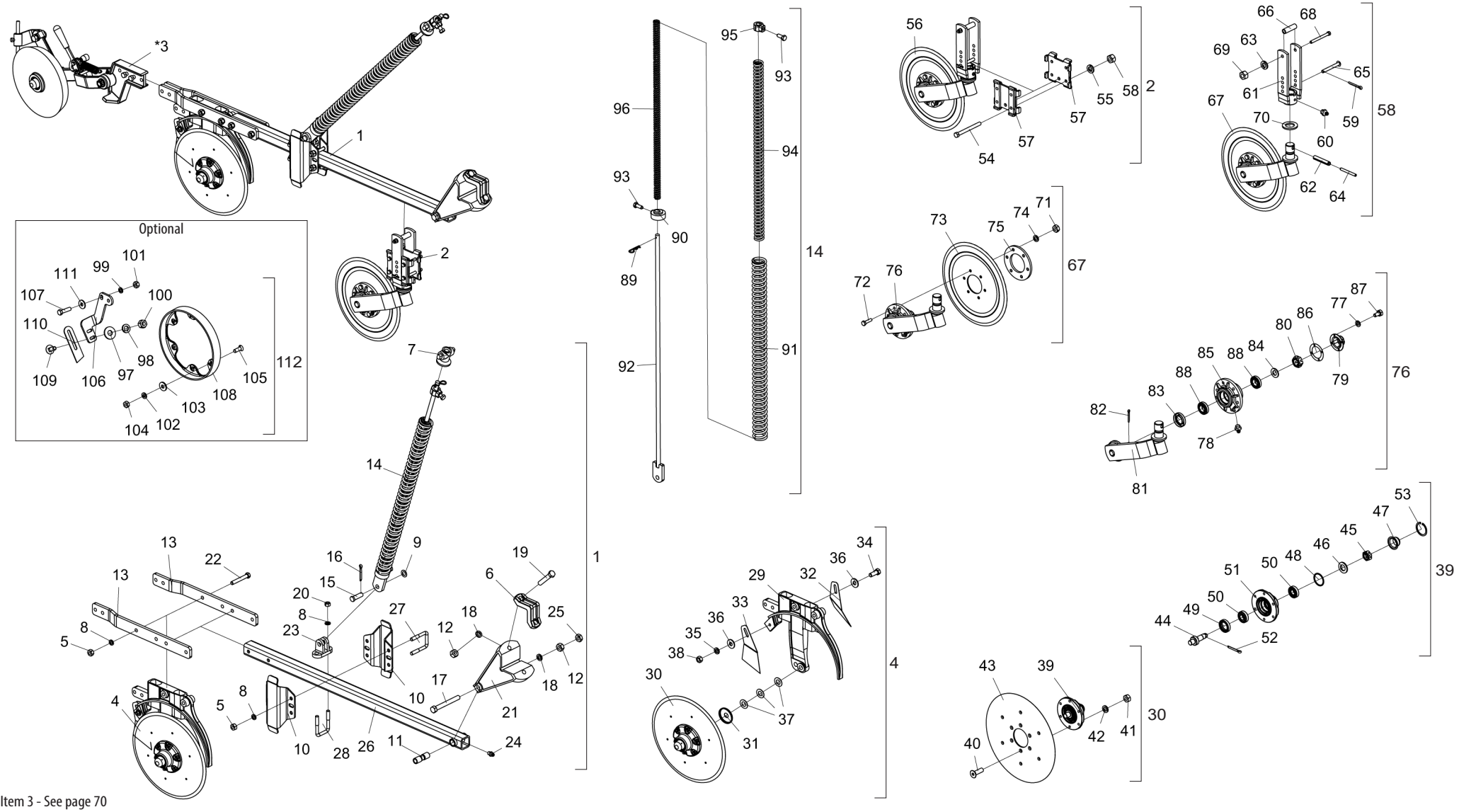

* Item 3 - See page 70

BALDAN

• Table Row W/ Heavy Iron Compaction Wheel - Spacing 170mm

Item	Code	Product description	All	Small Right	Large Right	Small Left	Large Left	Small Right W/Cutting Disc	Large Right W/Cutting Disc	Small Left W/Cutting Disc	Large Left W/Cutting Disc
1	2517011538-7	Small Right Row Unit(Spde-A)		1				1			
1	2517011539-5	Large Right Row Unit(Spde-A)			1				1		
1	2517011540-9	Small Left Row Unit(Spde-A)				1				1	
1	2517011541-7	Large Left Row Unit(Spde-A)					1				1
2	5124010337-4	Complete Cart Of Rippled Coulter Disc Blade						1	1	1	1
*3	5124010576-8	Row Of Left Heavy Iron Complete Compactation Wheel		1	1			1	1		
*3	5124010575-0	Row Of Right Heavy Iron Complete Compactation Wheel				1	1			1	1
4	5124010372-2	Complete Cart Of Double Disc Fertilizer/Seed (Excentric) Special		1	1			1	1		
4	5124010373-0	Left Cart Of Fertilizer/Seed Double Disc (Excentric) Special				1	1			1	1
5	6020310754-7	Hexagonal Nut 1/2" 12F W Gr5 Ch.7/8" Height 12,00Mm		4	8	4	8	4	8	4	8
6	6010601347-3	Fixation Shank Of Coulter Disc	1								
7	6010601280-9	Upper Lock Of Triple Spring	1								
8	6020010410-5	Pressure Washer 1/2" Media Industry		6	10	6	10	6	10	6	10
9	5024010059-0	Smooth Washer Ø16,5 X Ø29 X 1,21Mm	1								
10	5526010018-0	Separator Of Rowas	2								
11	5080010539-8	Row Articulation Bushing	1								
12	6020310760-1	Hexagonal Nut 5/8" 11F Unc Gr5 Ch.1.1/16" Height 15,00Mm	3								
13	5136015261-1	Fixation Plate Of Double Disc	2								
14	5566010260-3	Small Rod Of Spring Of 700Mm Complete		1		1		1		1	
14	5566010261-1	Smalll Rod Of Spring Of 800Mm Complete			1		1		1		1
15	6020310593-5	Pin Ø5/8" X 46mm	1								
16	6020050101-5	Cotterpin 1/8" X 1"	1								
17	6020311082-3	Hexagonal Head Bolt 5/8" X 5.1/2" 11F Unc1A Gr5 Rp	1								
18	6020010412-1	Pressure Washer 5/8" Media Industry	3								
19	6020311079-3	Hexagonal Head Bolt 5/8" X 3.1/2" 11F Unc1A Gr5 Rp	2								
20	6020310756-3	Hexagonal Nut 1/2" 12F W Gr5 Ch.3/4" Height 11,00Mm	2								
21	5252040056-7	Cart Hitch	1								
22	6020311061-0	Hexagonal Head Bolt 1/2" X 3.1/2" 12F W Gr5 Rp		2	4	2	4	2	4	2	4
23	6010601172-1	Lower Support Of Rod (Small)	1								
24	6020130100-1	Grease Fitting 1/4"	1								
25	6020310738-5	Hexagonal Nut 5/8" 11F Unc Gr5 Ch.1.1/16" Height 11,00Mm	1								
26	5572015584-1	Square Beam Of50 X 1200Mm Complete	1								
27	6020311065-3	Hexagonal Head Bolt 1/2" X 4" 12F W Gr5 Rp		2		2		2		2	

Item	Code	Product description	All	Small Right	Large Right	Small Left	Large Left	Small Right W/Cutting Disc	Large Right W/Cutting Disc	Small Left W/Cutting Disc	Large Left W/Cutting Disc
27	5068010081-8	Clamp Of 84 X 64 X R.1/2" W			2		2		2		2
28	5068010081-8	Clamp Of 84 X 64 X R.1/2" W	1								
29	5530011577-1	Right Support Of Fertilizer And Seed Large Double Disc (Descentrado)		1	1			1	1		
29	5530011576-3	Left Support Of Large Fertilizer/Seed Large Double Disc				1	1			1	1
30	5204010159-4	Complete Right Hub For Limiter Ring(Coulter Disc Blade 15" X 4,00Mm)	1								
30	5204010160-8	Complete Left Hub For Limiter Ring (Plain Disc 15" X 4,00Mm)	1								
31	5096040002-7	Hub Internal Cap	2								
32	5352030056-9	Internal Left Scraper Of Disc	1								
33	5352030057-7	Internal Right Scraper Of Disc	1								
34	6020310054-2	Hexagonal Head Bolt 3/8" X 1" 16F Unc1A Gr2 Rt	1								
35	6020010406-7	Pressure Washer 3/8" Media Industry	1								
36	5024010075-1	Smooth Washer Ø10,3 X Ø25 X 2,00Mm	2								
37	5024010024-7	Smooth Washer Ø20 X Ø38 X 1,21Mm	6								
38	6020310746-6	Hexagonal Nut 3/8" 16F Unc Gr5 Ch.9/16" Height 8,50Mm	1								
39	5204010149-7	Left Disc Hub	1								
39	5204010150-0	Right Disc Hub	1								
40	6020317573-9	Allen Bolt M8 X 1,25 X 25mm Cl12.9 RT	12								
41	6020310454-8	Hexagonal Nut M8 X 1,25 Ma Cl8 Ch.13Mm H.6,50Mm	12								
42	6020010004-5	Pressure Washer M8 Media	12								
43	2857398003-6	Coulter Plain Disc Blade 15 X 4,00 Hc Rd 80Mm + 6H Rd 8,7Mm R=57,5Mm	2								
44	5232010076-3	Shaft Ø36 X 94Mm With Left Thread	1								
44	5232010077-1	Shaft Ø36 X 94Mm With Right Thread	1								
45	6020310797-0	Nut 3/4" 16F Unf Gr5 Ch.1.1/16" Height 13,00Mm	2								
46	6020010513-6	Plain Washer Ø20 X Ø35 X 3Mm	2								
47	6020050641-6	Hub Cap	2								
48	6020010095-9	Gascket Ring 047X 052X 2Mm	2								
49	6020350268-3	Retainer Ø36,00 X Ø52,00 X 11,00Mm	2								
50	6020350087-7	Bearing 30204	4								
51	5204010148-9	Hub Of Ø136 X 54Mm	2								
52	6020050101-5	Cotterpin 1/8" X 1"	2								
53	6020010289-7	Retaining Ring I-55	2								
54	6020311038-6	Hexagonal Head Bolt 3/8" X 4" 16F Unc1A Gr2 Rp						4	4	4	4
55	6020010406-7	Pressure Washer 3/8" Media Industry						4	4	4	4

• Table Row W/ Heavy Iron Compaction Wheel - Spacing 170mm

Item	Code	Product description	All	Small Right	Large Right	Small Left	Large Left	Small Right W/Cutting Disc	Large Right W/Cutting Disc	Small Left W/Cutting Disc	Large Left W/Cutting Disc
56	5124010099-5	Rippled Coulter Disc Row						1	1	1	1
57	5324050014-7	Complete Adjustment Support Guide						2	2	2	2
58	6020310746-6	Hexagonal Nut 3/8" 16F Unc Gr5 Ch.9/16" Height 8,50Mm						4	4	4	4
59	6020050101-5	Cotterpin 1/8" X 1"						1	1	1	1
60	6020130108-7	Grease Fitting 1/8"						1	1	1	1
61	5530010406-0	Depth Regulator Support						1	1	1	1
62	6020310510-2	Heavy Elastic Pin Ø10 X 55Mm						1	1	1	1
63	6020010406-7	Pressure Washer 3/8" Media Industry						1	1	1	1
64	6020310472-6	Heavy Elastic Pin Ø6 X 55Mm						1	1	1	1
65	5432010181-9	French Head Pin Ø11,20 X 90Mm						1	1	1	1
66	5080020787-5	Bushing Of Ø14 X Ø19 X 65Mm						1	1	1	1
67	5124010100-2	Cart W/Rippled Coulter Disc Blade						1	1	1	1
68	6020311038-6	Hexagonal Head Bolt 3/8" X 4" 16F Unc1A Gr2 Rp						1	1	1	1
69	6020310746-6	Hexagonal Nut 3/8" 16F Unc Gr5 Ch.9/16" Height 8,50Mm						1	1	1	1
70	5024010107-3	Smooth Washer Ø36 X Ø61 X 5,00Mm						1	1	1	1
71	6020310822-5	Hexagonal Nut M10 X 1,50 Ma Cl8 Ch.17Mm H.8,00Mm						6	6	6	6
72	6020310980-9	Hexagonal Head Bolt M10 X 1,50 X 40Mm Cl8.8 Rt						6	6	6	6
73	3255397388-0	Rippled Plain Disc Blade 14 X 4,00 Hc Rd 80Mm + 6H Rd 10,3Mm						1	1	1	1
74	6020010394-0	Pressure Washer M10 Media						6	6	6	6
75	5284010001-4	Flange Of Disc Hub						1	1	1	1
76	5530010405-2	Support Of Disc W/Hub						1	1	1	1
77	6020010402-4	Pressure Washer 1/4" Media Industry						4	4	4	4
78	6020130108-7	Grease Fitting 1/8"						1	1	1	1
79	6020050640-8	Hub Cap						1	1	1	1
80	6020310797-0	Nut 3/4" 16F Unf Gr5 Ch.1.1/16" Height 13,00Mm						1	1	1	1
81	5530160187-4	Support W/Shaft Of Disc						1	1	1	1
82	6020050101-5	Cotterpin 1/8" X 1"						1	1	1	1
83	6020350244-6	Retainer Ø35,00 X Ø58,00 X 10,00Mm						1	1	1	1
84	5024010258-4	Smooth Washer Ø20 X Ø38,5 X 3,00Mm						1	1	1	1
85	5204010090-3	Disc Hub						1	1	1	1
86	6020190098-3	Gascket Ø50,3 X Ø73,5 X 1/64"						1	1	1	1
87	6020311000-9	Hexagonal Head Bolt 1/4" X 1/2" 20F Unc1A Gr5 Rt						4	4	4	4
88	6020350077-0	Bearing 44610/49						2	2	2	2

Item	Code	Product description	All	Small Right	Large Right	Small Left	Large Left	Small Right W/Cutting Disc	Large Right W/Cutting Disc	Small Left W/Cutting Disc	Large Left W/Cutting Disc
89	6020390294-0	Lock Nma - Type "R" Ø3,5 X 67Mm(Special)	1								
90	5530016364-4	Lower Support Of Triple Spring	1								
91	6020250664-2	Helical Spring Ø43 X Ø59 X 700Mm External		1		1		1		1	
91	6020250667-7	Helical Spring Ø43 X Ø59 X 800Mm External			1		1		1		1
92	5566040144-9	Rod Of Spring De 935,5Mm		1		1		1		1	
92	5566010205-0	Rod Of Spring De 1085,5Mm			1		1		1		1
93	6020310349-5	Hexagonal Head Bolt M12 X 1,75 X 30Mm Cl8.8 R Wth Point	2								
94	6020250663-4	Helical Spring Ø27,3 X Ø40 X 700Mm Intermediary		1		1		1		1	
94	6020250666-9	Helical Spring Ø27,3 X Ø40 X 800Mm Intermediary			1		1		1		1
95	5080011663-2	Fixation Support Of Spring Rod	1								
96	6020250662-6	Helical Spring Ø17,5 X Ø25,5 X 700Mm Internal		1		1		1		1	
96	6020250665-0	Helical Spring Ø17,5 X Ø25,5 X 800Mm Internal			1		1		1		1
		Optional									
97	5024010075-1	Smooth Washer Ø10,3 X Ø25 X 2,00Mm	2								
98	6020010406-7	Pressure Washer 3/8" Media Industry	2								
99	6020010410-5	Pressure Washer 1/2" Media Industry	2								
100	6020310746-6	Hexagonal Nut 3/8" 16F Unc Gr5 Ch.9/16" Height 8,50Mm	2								
101	6020310754-7	Hexagonal Nut 1/2" 12F W Gr5 Ch.7/8" Height 12,00Mm	2								
102	6020010402-4	Pressure Washer 1/4" Media Industry	6								
103	5024010161-8	Smooth Washer Ø7 X Ø18 X 2,00Mm	6								
104	6020310742-3	Hexagonal Nut 1/4" 20F Unc Gr5 Ch.7/16" Height 5,50Mm	6								
105	6020310147-6	Bolt 1/4" X 3/4" 20F Unc1A Gr5 Rt	6								
106	5530014453-4	Left Support Of Scraper		1	1			1	1		
106	5530014452-6	Right Support Of Scraper				1	1			1	1
107	6020310049-6	Hexagonal Head Bolt 1/2" X 2" 12F W Gr5 Rp	2								
108	6010600786-4	Deph Limiter Ring (40Mm)	1								
109	6020311160-9	French Head Bolt 3/8" X 1" 16F Unc1A Gr2 Rt	2								
110	5352010048-9	Limiter Of Limiter Rim	1								
111	5024010068-9	Smooth Washer Ø13,3 X Ø35,5 X 3,00Mm	2								
112	5288010055-6	Left Limiter Ring With Scraper (Deph 40Mm)		1	1			1	1		
112	5288010054-8	Right Limiter Ring With Scaper (Deph 40Mm)				1	1			1	1

• Lateral Row W/ Heavy Iron Compaction Wheel - Spacing 170mm

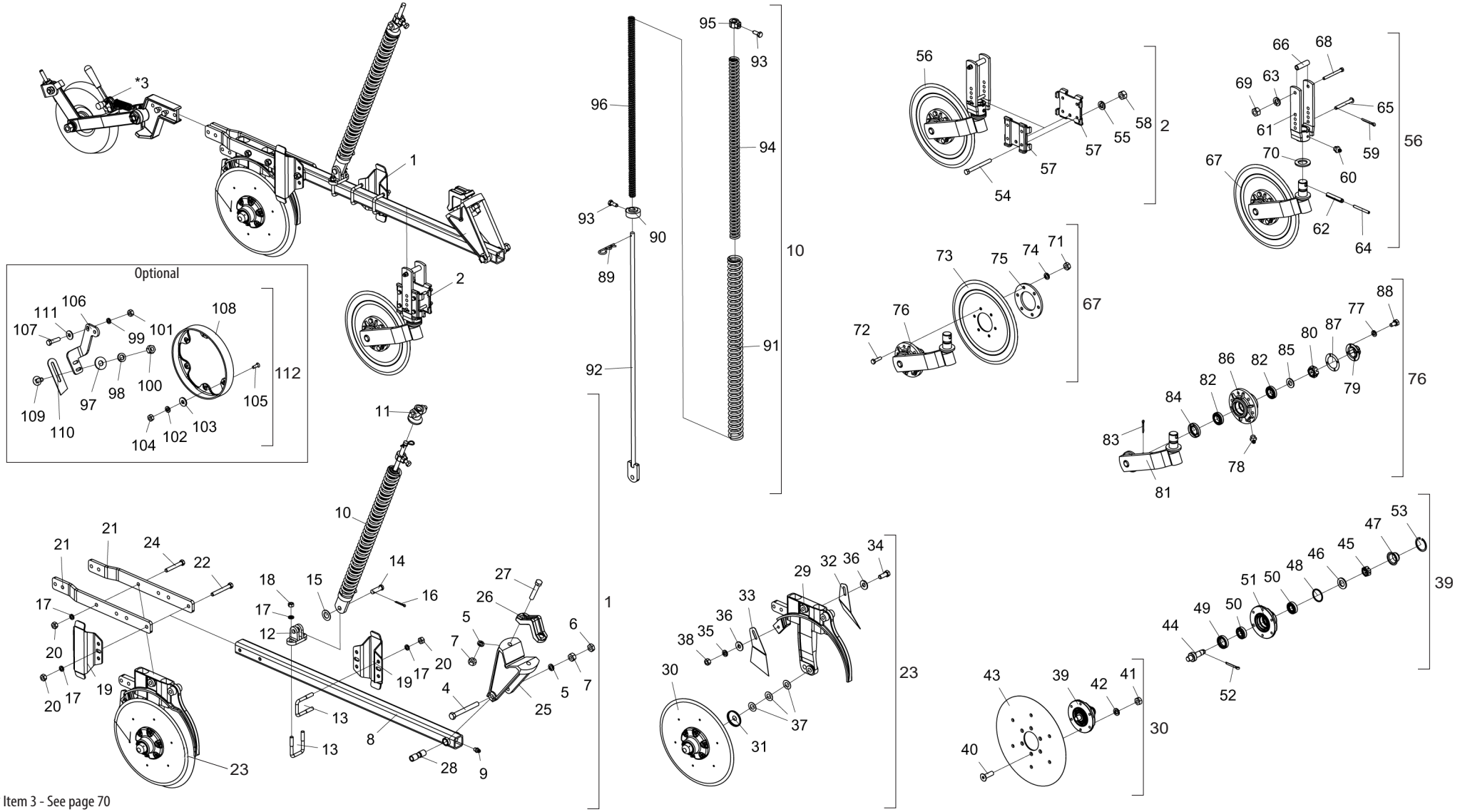

* Item 3 - See page 70

• Table Lateral Row W/ Heavy Iron Compaction Wheel - Spacing 170mm

Item	Code	Product description	All	Large Right	Small Left	Large Right W/Cutting Disc	Small Left W/Cutting Disc
1	2517011763-0	Large Right Lateral Row Unit (Spde-A)		1		1	
1	2517011764-9	Small Left Lateral Row Unit(Spde-A)			1		1
2	5124010337-4	Complete Cart Of Rippled Coulter Disc Blade				1	1
*3	5124010576-8	Row Of Left Heavy Iron Complete Compactation Wheel		1		1	
*3	5124010575-0	Row Of Right Heavy Iron Complete Compactation Wheel			1		1
4	6020311082-3	Hexagonal Head Bolt 5/8" X 5.1/2" 11F Unc1A Gr5 Rp	1				
5	6020010412-1	Pressure Washer 5/8" Media Industry	3				
6	6020310738-5	Hexagonal Nut 5/8" 11F Unc Gr5 Ch.1.1/16" Height 11,00Mm	1				
7	6020310760-1	Hexagonal Nut 5/8" 11F Unc Gr5 Ch.1.1/16" Height 15,00Mm	3				
8	5572015584-1	Square Beam Of50 X 1200Mm Complete	1				
9	6020130100-1	Grease Fitting 1/4"	1				
10	5566010261-1	Smalll Rod Of Spring Of 800Mm Complete		1		1	
10	5566010260-3	Small Rod Of Spring Of 700Mm Complete			1		1
11	6010601280-9	Upper Lock Of Triple Spring	1				
12	6010601172-1	Lower Support Of Rod (Small)	1				
13	5068010081-8	Clamp Of 84 X 64 X R.1/2" W	3				
14	6020310593-5	Pin Ø5/8" X 46mm	1				
15	5024010059-0	Smooth Washer Ø16,5 X Ø29 X 1,21Mm	1				
16	6020050101-5	Cotterpin 1/8" X 1"	1				
17	6020010410-5	Pressure Washer 1/2" Media Industry		14	10	14	10
18	6020310756-3	Hexagonal Nut 1/2" 12F W Gr5 Ch.3/4" Height 11,00Mm	2				
19	5526010018-0	Separator Of Rowas	2				
20	6020310754-7	Hexagonal Nut 1/2" 12F W Gr5 Ch.7/8" Height 12,00Mm		12	8	12	8
21	5136015261-1	Fixation Plate Of Double Disc	2				
22	5068010081-8	Clamp Of 84 X 64 X R.1/2" W		2		2	
22	6020311065-3	Hexagonal Head Bolt 1/2" X 4" 12F W Gr5 Rp			2		2
23	5124010372-2	Complete Cart Of Double Disc Fertilizer/Seed (Excentric) Special		1		1	
23	5124010373-0	Left Cart Of Fertilizer/Seed Double Disc (Excentric) Special			1		1
24	6020311061-0	Hexagonal Head Bolt 1/2" X 3.1/2" 12F W Gr5 Rp		4	2	4	2
25	5252040056-7	Cart Hitch	1				
26	6010601347-3	Fixation Shank Of Coulter Disc	1				
27	6020311079-3	Hexagonal Head Bolt 5/8" X 3.1/2" 11F Unc1A Gr5 Rp	2				
28	5080010539-8	Row Articulation Bushing	1				

Item	Code	Product description	All	Large Right	Small Left	Large Right W/Cutting Disc	Small Left W/Cutting Disc
29	5530011577-1	Right Support Of Fertilizer And Seed Large Double Disc (Descentrado)		1		1	
29	5530011576-3	Left Support Of Large Fertilizer/Seed Large Double Disc			1		1
30	5204010159-4	Complete Right Hub For Limiter Ring(Coulter Disc Blade 15" X 4,00Mm)	1				
30	5204010160-8	Complete Left Hub For Limiter Ring (Plain Disc 15" X 4,00Mm)	1				
31	5096040002-7	Hub Internal Cap	2				
32	5352030056-9	Internal Left Scraper Of Disc	1				
33	5352030057-7	Internal Right Scraper Of Disc	1				
34	6020310054-2	Hexagonal Head Bolt 3/8" X 1" 16F Unc1A Gr2 Rt	1				
35	6020010406-7	Pressure Washer 3/8" Media Industry	1				
36	5024010075-1	Smooth Washer Ø10,3 X Ø25 X 2,00Mm	2				
37	5024010024-7	Smooth Washer Ø20 X Ø38 X 1,21Mm	6				
38	6020310746-6	Hexagonal Nut 3/8" 16F Unc Gr5 Ch.9/16" Height 8,50Mm	1				
39	5204010149-7	Left Disc Hub	1				
39	5204010150-0	Right Disc Hub	1				
40	6020317573-9	Allen Bolt M8 X 1,25 X 25mm Cl12.9 RT	12				
41	6020310454-8	Hexagonal Nut M8 X 1,25 Ma Cl8 Ch.13Mm H.6,50Mm	12				
42	6020010004-5	Pressure Washer M8 Media	12				
43	2857398003-6	Coulter Plain Disc Blade 15 X 4,00 Hc Rd 80Mm + 6H Rd 8,7Mm R=57,5Mm + 6H Rd 6,9Mm	2				
44	5232010076-3	Shaft Ø36 X 94Mm With Left Thread	1				
44	5232010077-1	Shaft Ø36 X 94Mm With Right Thread	1				
45	6020310797-0	Nut 3/4" 16F Unf Gr5 Ch.1.1/16" Height 13,00Mm	2				
46	6020010513-6	Plain Washer Ø20 X Ø35 X 3Mm	2				
47	6020050641-6	Hub Cap	2				
48	6020010095-9	Gascket Ring 047X 052X 2Mm	2				
49	6020350268-3	Retainer Ø36,00 X Ø52,00 X 11,00Mm	2				
50	6020350087-7	Bearing 30204	4				
51	5204010148-9	Hub Of Ø136 X 54Mm	2				
52	6020050101-5	Cotterpin 1/8" X 1"	2				
53	6020010289-7	Retaining Ring I-55	2				
54	6020311038-6	Hexagonal Head Bolt 3/8" X 4" 16F Unc1A Gr2 Rp				4	4
55	6020010406-7	Pressure Washer 3/8" Media Industry				4	4
56	5124010099-5	Rippled Coulter Disc Row				1	1
57	5324050014-7	Complete Adjustment Support Guide				2	2

BALDAN

• Table Lateral Row W/ Heavy Iron Compaction Wheel - Spacing 170mm

Item	Code	Product description	All	Large Right	Small Left	Large Right W/Cutting Disc	Small Left W/Cutting Disc
58	6020310746-6	Hexagonal Nut 3/8" 16F Unc Gr5 Ch.9/16" Height 8,50Mm				4	4
59	6020050101-5	Cotterpin 1/8" X 1"				1	1
60	6020130108-7	Grease Fitting 1/8"				1	1
61	5530010406-0	Depth Regulator Support				1	1
62	6020310510-2	Heavy Elastic Pin Ø10 X 55Mm				1	1
63	6020010406-7	Pressure Washer 3/8" Media Industry				1	1
64	6020310472-6	Heavy Elastic Pin Ø6 X 55Mm				1	1
65	5432010181-9	French Head Pin Ø11,20 X 90Mm				1	1
66	5080020787-5	Bushing Of Ø14 X Ø19 X 65Mm				1	1
67	5124010100-2	Cart W/Rippled Coulter Disc Blade				1	1
68	6020311038-6	Hexagonal Head Bolt 3/8" X 4" 16F Unc1A Gr2 Rp				1	1
69	6020310746-6	Hexagonal Nut 3/8" 16F Unc Gr5 Ch.9/16" Height 8,50Mm				1	1
70	5024010107-3	Smooth Washer Ø36 X Ø61 X 5,00Mm				1	1
71	6020310822-5	Hexagonal Nut M10 X 1,50 Ma Cl8 Ch.17Mm H.8,00Mm				6	6
72	6020310980-9	Hexagonal Head Bolt M10 X 1,50 X 40Mm Cl8.8 Rt				6	6
73	3255397388-0	Rippled Plain Disc Blade 14 X 4,00 Hc Rd 80Mm + 6H Rd 10,3Mm D=115Mm Doble Bevel				1	1
74	6020010394-0	Pressure Washer M10 Media				6	6
75	5284010001-4	Flange Of Disc Hub				1	1
76	5530010405-2	Support Of Disc W/Hub				1	1
77	6020010402-4	Pressure Washer 1/4" Media Industry				4	4
78	6020130108-7	Grease Fitting 1/8"				1	1
79	6020050640-8	Hub Cap				1	1
80	6020310797-0	Nut 3/4" 16F Unf Gr5 Ch.1.1/16" Height 13,00Mm				1	1
81	5530160187-4	Support W/Shaft Of Disc				1	1
82	6020350077-0	Bearing 44610/49				2	2
83	6020050101-5	Cotterpin 1/8" X 1"				1	1
84	6020350244-6	Retainer Ø35,00 X Ø58,00 X 10,00Mm				1	1
85	5024010258-4	Smooth Washer Ø20 X Ø38,5 X 3,00Mm				1	1
86	5204010090-3	Disc Hub				1	1
87	6020190098-3	Gascket Ø50,3 X Ø73,5 X 1/64"				1	1
88	6020311000-9	Hexagonal Head Bolt 1/4" X 1/2" 20F Unc1A Gr5 Rt				4	4
89	6020390294-0	Lock Nma - Type "R" Ø3,5 X 67Mm(Special)	1				
90	5530016364-4	Lower Support Of Triple Spring	1				

Item	Code	Product description	All	Large Right	Small Left	Large Right W/Cutting Disc	Small Left W/Cutting Disc
91	6020250664-2	Helical Spring Ø43 X Ø59 X 700Mm External			1		1
91	6020250667-7	Helical Spring Ø43 X Ø59 X 800Mm External		1		1	
92	5566040144-9	Rod Of Spring De 935,5Mm			1		1
92	5566010205-0	Rod Of Spring De 1085,5Mm		1		1	
93	6020310349-5	Hexagonal Head Bolt M12 X 1,75 X 30Mm Cl8.8 R Wth Point	2				
94	6020250663-4	Helical Spring Ø27,3 X Ø40 X 700Mm Intermediary			1		1
94	6020250666-9	Helical Spring Ø27,3 X Ø40 X 800Mm Intermediary		1		1	
95	5080011663-2	Fixation Support Of Spring Rod	1				
96	6020250662-6	Helical Spring Ø17,5 X Ø25,5 X 700Mm Internal			1		1
96	6020250665-0	Helical Spring Ø17,5 X Ø25,5 X 800Mm Internal		1		1	
		Optional					
97	5024010075-1	Smooth Washer Ø10,3 X Ø25 X 2,00Mm	2				
98	6020010406-7	Pressure Washer 3/8" Media Industry	2				
99	6020010410-5	Pressure Washer 1/2" Media Industry	2				
100	6020310746-6	Hexagonal Nut 3/8" 16F Unc Gr5 Ch.9/16" Height 8,50Mm	2				
101	6020310754-7	Hexagonal Nut 1/2" 12F W Gr5 Ch.7/8" Height 12,00Mm	2				
102	6020010402-4	Pressure Washer 1/4" Media Industry	6				
103	5024010161-8	Smooth Washer Ø7 X Ø18 X 2,00Mm	6				
104	6020310742-3	Hexagonal Nut 1/4" 20F Unc Gr5 Ch.7/16" Height 5,50Mm	6				
105	6020310147-6	Bolt 1/4" X 3/4" 20F Unc1A Gr5 Rt	6				
106	5530014453-4	Left Support Of Scraper		1	1		
106	5530014452-6	Right Support Of Scraper				1	1
107	6020310049-6	Hexagonal Head Bolt 1/2" X 2" 12F W Gr5 Rp	2				
108	6010600786-4	Deph Limiter Ring (40Mm)	1				
109	6020311160-9	French Head Bolt 3/8" X 1" 16F Unc1A Gr2 Rt	2				
110	5352010048-9	Limiter Of Limiter Rim	1				
111	5024010068-9	Smooth Washer Ø13,3 X Ø35,5 X 3,00Mm	2				
112	5288010055-6	Left Limiter Ring With Scraper (Deph 40Mm)		1	1		
112	5288010054-8	Right Limiter Ring With Scaper (Deph 40Mm)				1	1

• Row W/Rippled Cutting Disc and Heavy Iron Compactation Wheel - Spacing 250mm

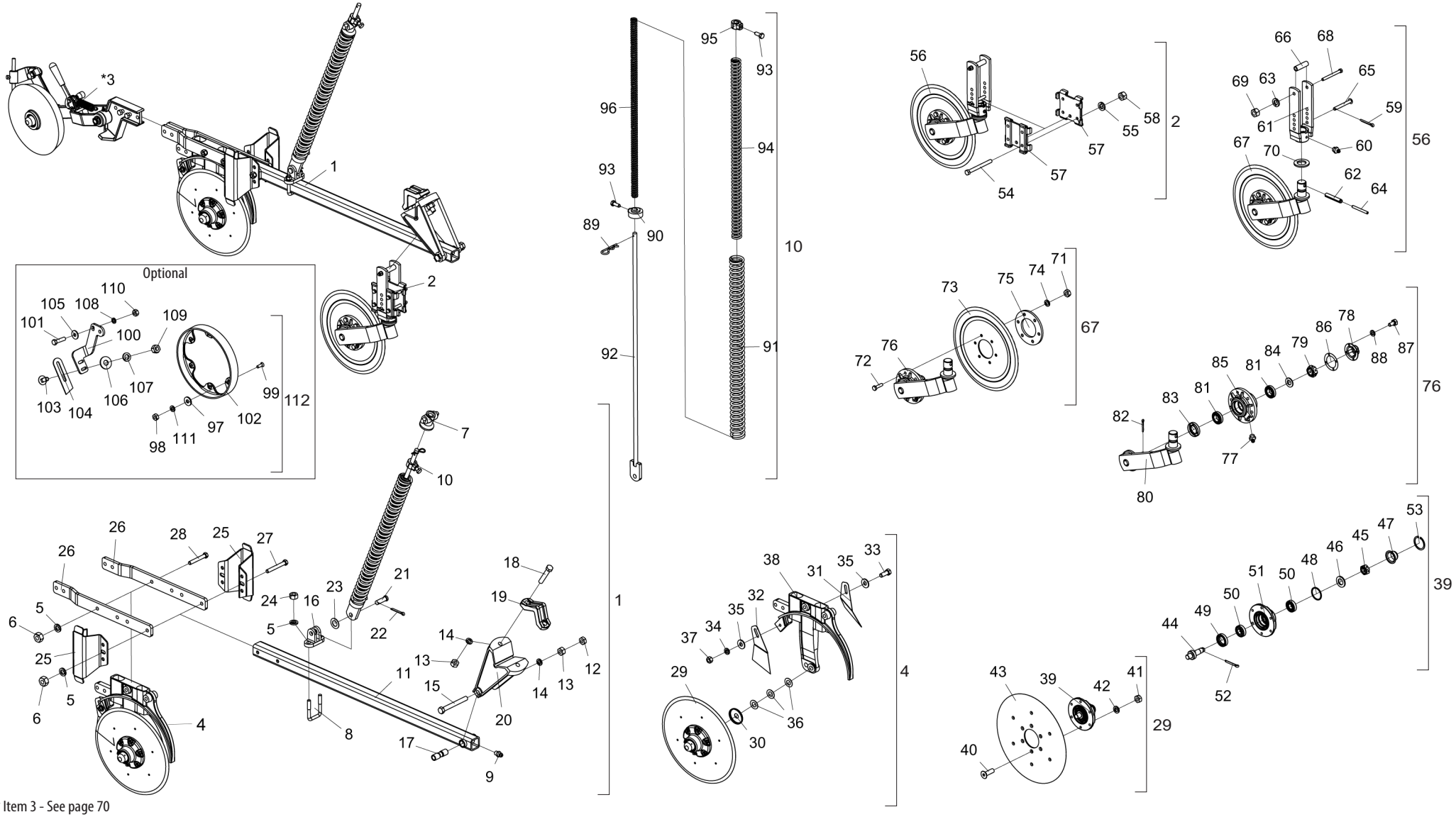

* Item 3 - See page 70

• Table Row W/Rippled Cutting Disc and Heavy Iron Compactation Wheel - Spacing 250mm

Item	Code	Product description	All	Small Right	Large Right	Small Left	Large Left
1	2517012381-9	Small Right Row Unit(Spde-A)		1			
1	2517012382-7	Small Right Row Unit(Spde-A)			1		
1	2517012383-5	Small Right Row Unit(Spde-A)				1	
1	2517012384-3	Small Right Row Unit(Spde-A)					1
2	5124010337-4	Complete Cart Of Rippled Coulter Disc Blade	1				
*3	5124010576-8	Row Of Left Heavy Iron Complete Compactation Wheel		1		1	
*3	5124010575-0	Row Of Right Heavy Iron Complete Compactation Wheel			1		1
4	5124010372-2	Complete Cart Of Double Disc Fertilizer/Seed (Excentric) Special		1	1		
4	5124010373-0	Left Cart Of Fertilizer/Seed Double Disc (Excentric) Special				1	1
5	6020010410-5	Pressure Washer 1/2" Media Industry		6	10	6	10
6	6020310754-7	Hexagonal Nut 1/2" 12F W Gr5 Ch.7/8" Height 12,00Mm		4	8	4	8
7	6010601280-9	Upper Lock Of Triple Spring	1				
8	5068010081-8	Clamp Of 84 X 64 X R.1/2" W	1				
9	6020130100-1	Grease Fitting 1/4"	1				
10	5566010260-3	Small Rod Of Spring Of 700Mm Complete		1		1	
10	5566010261-1	Smalll Rod Of Spring Of 800Mm Complete			1		1
11	5572015584-1	Square Beam Of50 X 1200Mm Complete	1				
12	6020310738-5	Hexagonal Nut 5/8" 11F Unc Gr5 Ch.1.1/16" Height 11,00Mm	1				
13	6020310760-1	Hexagonal Nut 5/8" 11F Unc Gr5 Ch.1.1/16" Height 15,00Mm	3				
14	6020010412-1	Pressure Washer 5/8" Media Industry	3				
15	6020311082-3	Hexagonal Head Bolt 5/8" X 5.1/2" 11F Unc1A Gr5 Rp	1				
16	6010601172-1	Lower Support Of Rod (Small)	1				
17	5080010539-8	Row Articulation Bushing	1				
18	6020311079-3	Hexagonal Head Bolt 5/8" X 3.1/2" 11F Unc1A Gr5 Rp	2				
19	6010601347-3	Fixation Shank Of Coulter Disc	1				
20	5252040056-7	Cart Hitch	1				
21	6020310593-5	Pin Ø5/8" X 46mm	1				
22	6020050101-5	Cotterpin 1/8" X 1"	1				
23	5024010059-0	Smooth Washer Ø16,5 X Ø29 X 1,21Mm	1				
24	6020310756-3	Hexagonal Nut 1/2" 12F W Gr5 Ch.3/4" Height 11,00Mm	2				
25	5526010035-0	Separator Of Rowas For Espacamento De 250Mm	2				
26	5136015261-1	Fixation Plate Of Double Disc	2				
27	6020311065-3	Hexagonal Head Bolt 1/2" X 4" 12F W Gr5 Rp		2		2	
27	5068010081-8	Clamp Of 84 X 64 X R.1/2" W			2		2
28	6020311061-0	Hexagonal Head Bolt 1/2" X 3.1/2" 12F W Gr5 Rp		2	4	2	4
29	5204010159-4	Complete Right Hub For Limiter Ring(Coulter Disc Blade 15" X 4,00Mm)	1				

Item	Code	Product description	All	Small Right	Large Right	Small Left	Large Left
29	5204010160-8	Complete Left Hub For Limiter Ring (Plain Disc 15" X 4,00Mm)	1				
30	5096040002-7	Hub Internal Cap	2				
31	5352030056-9	Internal Left Scraper Of Disc	1				
32	5352030057-7	Internal Right Scraper Of Disc	1				
33	6020310054-2	Hexagonal Head Bolt 3/8" X 1" 16F Unc1A Gr2 Rt	1				
34	6020010406-7	Pressure Washer 3/8" Media Industry	1				
35	5024010075-1	Smooth Washer Ø10,3 X Ø25 X 2,00Mm	2				
36	5024010024-7	Smooth Washer Ø20 X Ø38 X 1,21Mm	6				
37	6020310746-6	Hexagonal Nut 3/8" 16F Unc Gr5 Ch.9/16" Height 8,50Mm	1				
38	5530011577-1	Right Support Of Fertilizer And Seed Large Double Disc (Descentrado)		1	1		
38	5530011576-3	Left Support Of Large Fertilizer/Seed Large Double Disc				1	1
39	5204010149-7	Left Disc Hub	1				
39	5204010150-0	Right Disc Hub	1				
40	6020317573-9	Allen Bolt M8 X 1,25 X 25mm Cl12.9 RT	12				
41	6020310454-8	Hexagonal Nut M8 X 1,25 Ma Cl8 Ch.13Mm H.6,50Mm	12				
42	6020010004-5	Pressure Washer M8 Media	12				
43	2857398003-6	Coulter Plain Disc Blade 15 X 4,00 Hc Rd 80Mm + 6H Rd 8,7Mm R=57,5Mm + 6H Rd 6,9Mm	2				
44	5232010076-3	Shaft Ø36 X 94Mm With Left Thread	1				
44	5232010077-1	Shaft Ø36 X 94Mm With Right Thread	1				
45	6020310797-0	Nut 3/4" 16F Unf Gr5 Ch.1.1/16" Height 13,00Mm	2				
46	6020010513-6	Plain Washer Ø20 X Ø35 X 3Mm	2				
47	6020050641-6	Hub Cap	2				
48	6020010095-9	Gascket Ring 047X 052X 2Mm	2				
49	6020350268-3	Retainer Ø36,00 X Ø52,00 X 11,00Mm	2				
50	6020350087-7	Bearing 30204	4				
51	5204010148-9	Hub Of Ø136 X 54Mm	2				
52	6020050101-5	Cotterpin 1/8" X 1"	2				
53	6020010289-7	Retaining Ring I-55	2				
54	6020311038-6	Hexagonal Head Bolt 3/8" X 4" 16F Unc1A Gr2 Rp	4				
55	6020010406-7	Pressure Washer 3/8" Media Industry	4				
56	5124010099-5	Rippled Coulter Disc Row	1				
57	5324050014-7	Complete Adjustment Support Guide	2				
58	6020310746-6	Hexagonal Nut 3/8" 16F Unc Gr5 Ch.9/16" Height 8,50Mm	4				
59	6020050101-5	Cotterpin 1/8" X 1"	1				
60	6020130108-7	Grease Fitting 1/8"	1				
61	5530010406-0	Depth Regulator Support	1				

• Table Row W/Rippled Cutting Disc and Heavy Iron Compactation Wheel - Spacing 250mm

Item	Code	Product description	All	Small Right	Large Right	Small Left	Large Left
62	6020310510-2	Heavy Elastic Pin Ø10 X 55Mm	1				
63	6020010406-7	Pressure Washer 3/8" Media Industry	1				
64	6020310472-6	Heavy Elastic Pin Ø6 X 55Mm	1				
65	5432010181-9	French Head Pin Ø11,20 X 90Mm	1				
66	5080020787-5	Bushing Of Ø14 X Ø19 X 65Mm	1				
67	5124010100-2	Cart W/Rippled Coulter Disc Blade	1				
68	6020311038-6	Hexagonal Head Bolt 3/8" X 4" 16F Unc1A Gr2 Rp	1				
69	6020310746-6	Hexagonal Nut 3/8" 16F Unc Gr5 Ch.9/16" Height 8,50Mm	1				
70	5024010107-3	Smooth Washer Ø36 X Ø61 X 5,00Mm	1				
71	6020310822-5	Hexagonal Nut M10 X 1,50 Ma Cl8 Ch.17Mm H.8,00Mm	6				
72	6020310980-9	Hexagonal Head Bolt M10 X 1,50 X 40Mm Cl8.8 Rt	6				
73	3255397388-0	Rippled Plain Disc Blade 14 X 4,00 Hc Rd 80Mm + 6H Rd 10,3Mm D=115Mm Doble Bevel	1				
74	6020010394-0	Pressure Washer M10 Media	6				
75	5284010001-4	Flange Of Disc Hub	1				
76	5530010405-2	Support Of Disc W/Hub	1				
77	6020130108-7	Grease Fitting 1/8"	1				
78	6020050640-8	Hub Cap	1				
79	6020310797-0	Nut 3/4" 16F Unf Gr5 Ch.1.1/16" Height 13,00Mm	1				
80	5530160187-4	Support W/Shaft Of Disc	1				
81	6020350077-0	Bearing 44610/49	2				
82	6020050101-5	Cotterpin 1/8" X 1"	1				
83	6020350244-6	Retainer Ø35,00 X Ø58,00 X 10,00Mm	1				
84	5024010258-4	Smooth Washer Ø20 X Ø38,5 X 3,00Mm	1				
85	5204010090-3	Disc Hub	1				
86	6020190098-3	Gascket Ø50,3 X Ø73,5 X 1/64"	1				
87	6020311000-9	Hexagonal Head Bolt 1/4" X 1/2" 20F Unc1A Gr5 Rt	4				
88	6020010402-4	Pressure Washer 1/4" Media Industry	4				
89	6020390294-0	Lock Nma - Type "R" Ø3,5 X 67Mm(Special)	1				
90	5530016364-4	Lower Support Of Triple Spring	1				
91	6020250664-2	Helical Spring Ø43 X Ø59 X 700Mm External		1		1	
91	6020250667-7	Helical Spring Ø43 X Ø59 X 800Mm External			1		1
92	5566040144-9	Rod Of Spring De 935,5Mm		1		1	
92	5566010205-0	Rod Of Spring De 1085,5Mm			1		1
93	6020310349-5	Hexagonal Head Bolt M12 X 1,75 X 30Mm Cl8.8 R Wth Point	2				
94	6020250663-4	Helical Spring Ø27,3 X Ø40 X 700Mm Intermediary		1		1	
94	6020250666-9	Helical Spring Ø27,3 X Ø40 X 800Mm Intermediary			1		1

Item	Code	Product description	All	Small Right	Large Right	Small Left	Large Left
95	5080011663-2	Fixation Support Of Spring Rod	1				
96	6020250662-6	Helical Spring Ø17,5 X Ø25,5 X 700Mm Internal		1		1	
96	6020250665-0	Helical Spring Ø17,5 X Ø25,5 X 800Mm Internal			1		1
		Optional					
97	5024010161-8	Smooth Washer Ø7 X Ø18 X 2,00Mm	6				
98	6020310742-3	Hexagonal Nut 1/4" 20F Unc Gr5 Ch.7/16" Height 5,50Mm	6				
99	6020310147-6	Bolt 1/4" X 3/4" 20F Unc1A Gr5 Rt	6				
100	5530014453-4	Left Support Of Scraper		1	1		
100	5530014452-6	Right Support Of Scraper				1	1
101	6020310049-6	Hexagonal Head Bolt 1/2" X 2" 12F W Gr5 Rp	2				
102	6010600786-4	Deph Limiter Ring (40Mm)	1				
103	6020311160-9	French Head Bolt 3/8" X 1" 16F Unc1A Gr2 Rt	2				
104	5352010048-9	Limiter Of Limiter Rim	1				
105	5024010068-9	Smooth Washer Ø13,3 X Ø35,5 X 3,00Mm	2				
106	5024010075-1	Smooth Washer Ø10,3 X Ø25 X 2,00Mm	2				
107	6020010406-7	Pressure Washer 3/8" Media Industry	2				
108	6020010410-5	Pressure Washer 1/2" Media Industry	2				
109	6020310746-6	Hexagonal Nut 3/8" 16F Unc Gr5 Ch.9/16" Height 8,50Mm	2				
110	6020310754-7	Hexagonal Nut 1/2" 12F W Gr5 Ch.7/8" Height 12,00Mm	2				
111	6020010402-4	Pressure Washer 1/4" Media Industry	6				
112	5288010055-6	Left Limiter Ring With Scraper (Deph 40Mm)		1	1		
112	5288010054-8	Right Limiter Ring With Scaper (Deph 40Mm)				1	1

• Lateral Row W/Rippled Cutting Disc and Heavy Iron Compactation Wheel - Spacing 250mm

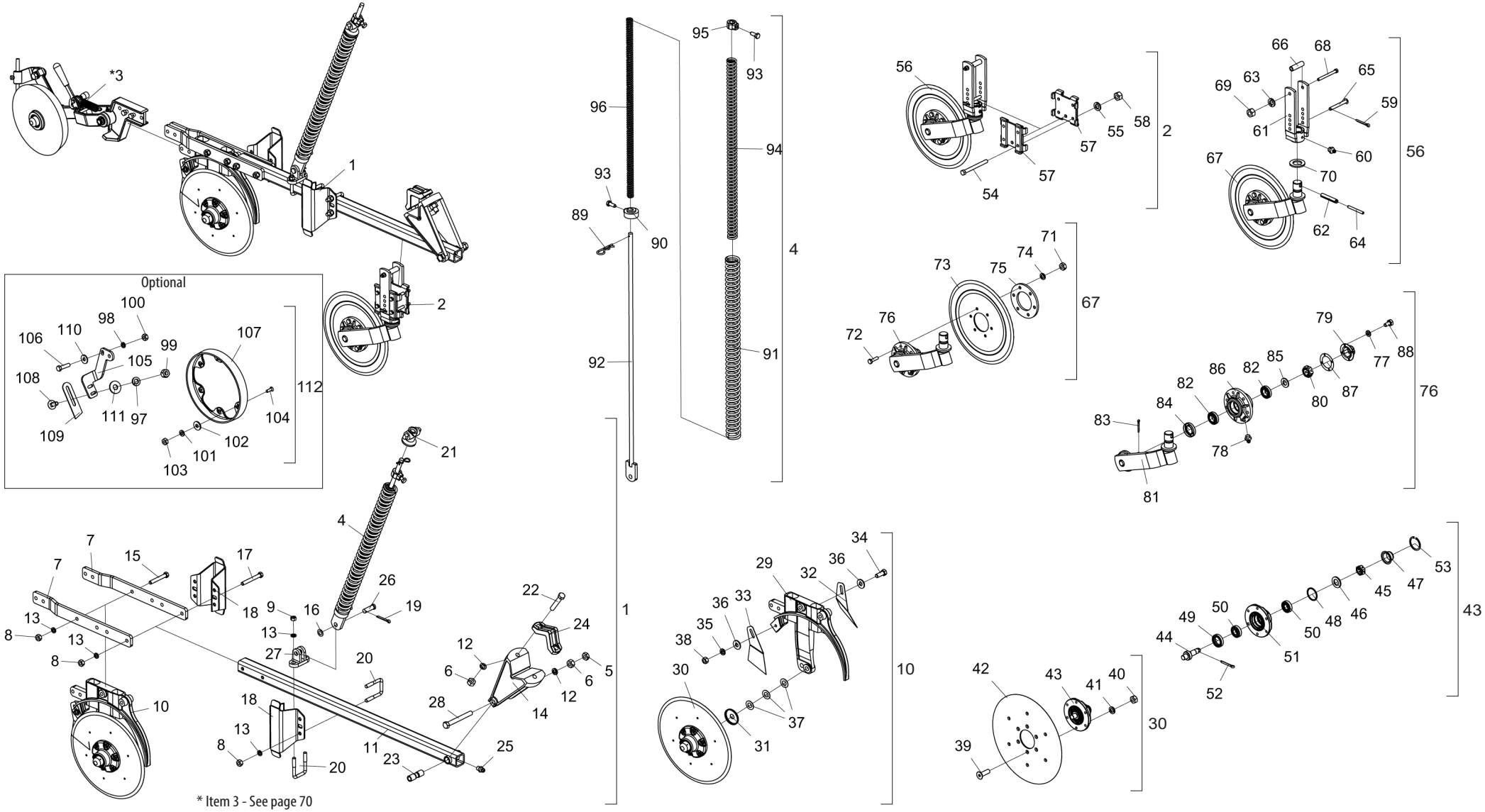

• Table Lateral Row W/Rippled Cutting Disc and Heavy Iron Compactation Wheel - Spacing 250mm

Item	Code	Product description	All	Small Right	Small Left
1	2517012458-0	Small Right Lateral Row for Spacing 250mm		1	
1	2517012386-0	Large Right Lateral Row Unit (Spde-A)			1
2	5124010337-4	Complete Cart Of Rippled Coulter Disc Blade	1		
*3	5124010576-8	Row Of Left Heavy Iron Complete Compactation Wheel		1	
*3	5124010575-0	Row Of Right Heavy Iron Complete Compactation Wheel			1
4	5566010260-3	Small Rod Of Spring Of 700Mm Complete	1		
5	6020310738-5	Hexagonal Nut 5/8" 11F Unc Gr5 Ch.1.1/16" Height 11,00Mm	1		
6	6020310760-1	Hexagonal Nut 5/8" 11F Unc Gr5 Ch.1.1/16" Height 15,00Mm	3		
7	5136015261-1	Fixation Plate Of Double Disc	2		
8	6020310754-7	Hexagonal Nut 1/2" 12F W Gr5 Ch.7/8" Height 12,00Mm	8		
9	6020310756-3	Hexagonal Nut 1/2" 12F W Gr5 Ch.3/4" Height 11,00Mm	2		
10	5124010372-2	Complete Cart Of Double Disc Fertilizer/Seed (Excentric) Special		1	
10	5124010373-0	Left Cart Of Fertilizer/Seed Double Disc (Excentric) Special			1
11	5572015584-1	Square Beam Of50 X 1200Mm Complete	1		
12	6020010412-1	Pressure Washer 5/8" Media Industry	3		
13	6020010410-5	Pressure Washer 1/2" Media Industry	10		
14	5252040056-7	Cart Hitch	1		
15	6020311061-0	Hexagonal Head Bolt 1/2" X 3.1/2" 12F W Gr5 Rp	2		
16	5024010059-0	Smooth Washer Ø16,5 X Ø29 X 1,21Mm	1		
17	6020311065-3	Hexagonal Head Bolt 1/2" X 4" 12F W Gr5 Rp	2		
18	5526010018-0	Separator Of Rowas			1
18	5526010035-0	Separator Of Rowas For Espacamento De 250Mm		2	1
19	6020050101-5	Cotterpin 1/8" X 1"	1		
20	5068010081-8	Clamp Of 84 X 64 X R.1/2" W	3		
21	6010601280-9	Upper Lock Of Triple Spring	1		
22	6020311079-3	Hexagonal Head Bolt 5/8" X 3.1/2" 11F Unc1A Gr5 Rp	2		
23	5080010539-8	Row Articulation Bushing	1		
24	6010601347-3	Fixation Shank Of Coulter Disc	1		
25	6020130100-1	Grease Fitting 1/4"	1		
26	6020310593-5	Pin Ø5/8" X 46mm	1		
27	6010601172-1	Lower Support Of Rod (Small)	1		
28	6020311082-3	Hexagonal Head Bolt 5/8" X 5.1/2" 11F Unc1A Gr5 Rp	1		
29	5530011577-1	Right Support Of Fertilizer And Seed Large Double Disc (Descentrado)		1	
29	5530011576-3	Left Support Of Large Fertilizer/Seed Large Double Disc			1
30	5204010159-4	Complete Right Hub For Limiter Ring(Coulter Disc Blade 15" X 4,00Mm)	1		
30	5204010160-8	Complete Left Hub For Limiter Ring (Plain Disc 15" X 4,00Mm)	1		

Item	Code	Product description	All	Small Right	Small Left
31	5096040002-7	Hub Internal Cap	2		
32	5352030056-9	Internal Left Scraper Of Disc	1		
33	5352030057-7	Internal Right Scraper Of Disc	1		
34	6020310054-2	Hexagonal Head Bolt 3/8" X 1" 16F Unc1A Gr2 Rt	1		
35	6020010406-7	Pressure Washer 3/8" Media Industry	1		
36	5024010075-1	Smooth Washer Ø10,3 X Ø25 X 2,00Mm	2		
37	5024010024-7	Smooth Washer Ø20 X Ø38 X 1,21Mm	6		
38	6020310746-6	Hexagonal Nut 3/8" 16F Unc Gr5 Ch.9/16" Height 8,50Mm	1		
39	6020317573-9	Allen Bolt M8 X 1,25 X 25mm Cl12.9 RT	12		
40	6020310454-8	Hexagonal Nut M8 X 1,25 Ma Cl8 Ch.13Mm H.6,50Mm	12		
41	6020010004-5	Pressure Washer M8 Media	12		
42	2857398003-6	Coulter Plain Disc Blade 15 X 4,00 Hc Rd 80Mm + 6H Rd 8,7Mm R=57,5Mm + 6H Rd 6,9Mm	2		
43	5204010149-7	Left Disc Hub	1		
43	5204010150-0	Right Disc Hub	1		
44	5232010076-3	Shaft Ø36 X 94Mm With Left Thread	1		
44	5232010077-1	Shaft Ø36 X 94Mm With Right Thread	1		
45	6020310797-0	Nut 3/4" 16F Unf Gr5 Ch.1.1/16" Height 13,00Mm	2		
46	6020010513-6	Plain Washer Ø20 X Ø35 X 3Mm	2		
47	6020050641-6	Hub Cap	2		
48	6020010095-9	Gascket Ring 047X 052X 2Mm	2		
49	6020350268-3	Retainer Ø36,00 X Ø52,00 X 11,00Mm	2		
50	6020350087-7	Bearing 30204	4		
51	5204010148-9	Hub Of Ø136 X 54Mm	2		
52	6020050101-5	Cotterpin 1/8" X 1"	2		
53	6020010289-7	Retaining Ring I-55	2		
54	6020311038-6	Hexagonal Head Bolt 3/8" X 4" 16F Unc1A Gr2 Rp	4		
55	6020010406-7	Pressure Washer 3/8" Media Industry	4		
56	5124010099-5	Rippled Coulter Disc Row	1		
57	5324050014-7	Complete Adjustment Support Guide	2		
58	6020310746-6	Hexagonal Nut 3/8" 16F Unc Gr5 Ch.9/16" Height 8,50Mm	4		
59	6020050101-5	Cotterpin 1/8" X 1"	1		
60	6020130108-7	Grease Fitting 1/8"	1		
61	5530010406-0	Depth Regulator Support	1		
62	6020310510-2	Heavy Elastic Pin Ø10 X 55Mm	1		
63	6020010406-7	Pressure Washer 3/8" Media Industry	1		
64	6020310472-6	Heavy Elastic Pin Ø6 X 55Mm	1		

• Table Lateral Row W/Rippled Cutting Disc and Heavy Iron Compactation Wheel - Spacing 250mm

Item	Code	Product description	All	Small Right	Small Left
65	5432010181-9	French Head Pin Ø11,20 X 90Mm	1		
66	5080020787-5	Bushing Of Ø14 X Ø19 X 65Mm	1		
67	5124010100-2	Cart W/Rippled Coulter Disc Blade	1		
68	6020311038-6	Hexagonal Head Bolt 3/8" X 4" 16F Unc1A Gr2 Rp	1		
69	6020310746-6	Hexagonal Nut 3/8" 16F Unc Gr5 Ch.9/16" Height 8,50Mm	1		
70	5024010107-3	Smooth Washer Ø36 X Ø61 X 5,00Mm	1		
71	6020310822-5	Hexagonal Nut M10 X 1,50 Ma Cl8 Ch.17Mm H.8,00Mm	6		
72	6020310980-9	Hexagonal Head Bolt M10 X 1,50 X 40Mm Cl8.8 Rt	6		
73	3255397388-0	Rippled Plain Disc Blade 14 X 4,00 Hc Rd 80Mm + 6H Rd 10,3Mm D=115Mm Doble Bevel	1		
74	6020010394-0	Pressure Washer M10 Media	6		
75	5284010001-4	Flange Of Disc Hub	1		
76	5530010405-2	Support Of Disc W/Hub	1		
77	6020010402-4	Pressure Washer 1/4" Media Industry	4		
78	6020130108-7	Grease Fitting 1/8"	1		
79	6020050640-8	Hub Cap	1		
80	6020310797-0	Nut 3/4" 16F Unf Gr5 Ch.1.1/16" Height 13,00Mm	1		
81	5530160187-4	Support W/Shaft Of Disc	1		
82	6020350077-0	Bearing 44610/49	2		
83	6020050101-5	Cotterpin 1/8" X 1"	1		
84	6020350244-6	Retainer Ø35,00 X Ø58,00 X 10,00Mm	1		
85	5024010258-4	Smooth Washer Ø20 X Ø38,5 X 3,00Mm	1		
86	5204010090-3	Disc Hub	1		
87	6020190098-3	Gascket Ø50,3 X Ø73,5 X 1/64"	1		
88	6020311000-9	Hexagonal Head Bolt 1/4" X 1/2" 20F Unc1A Gr5 Rt	4		
89	6020390294-0	Lock Nma - Type "R" Ø3,5 X 67Mm(Special)	1		
90	5530016364-4	Lower Support Of Triple Spring	1		
91	6020250664-2	Helical Spring Ø43 X Ø59 X 700Mm External	1		
92	5566040144-9	Rod Of Spring De 935,5Mm	1		
93	6020310349-5	Hexagonal Head Bolt M12 X 1,75 X 30Mm Cl8.8 R Wth Point	2		
94	6020250663-4	Helical Spring Ø27,3 X Ø40 X 700Mm Intermediary	1		
95	5080011663-2	Fixation Support Of Spring Rod	1		
96	6020250662-6	Helical Spring Ø17,5 X Ø25,5 X 700Mm Internal	1		
		Optional			
97	6020010406-7	Pressure Washer 3/8" Media Industry	2		
98	6020010410-5	Pressure Washer 1/2" Media Industry	2		
99	6020310746-6	Hexagonal Nut 3/8" 16F Unc Gr5 Ch.9/16" Height 8,50Mm	2		

Item	Code	Product description	All	Small Right	Small Left
100	6020310754-7	Hexagonal Nut 1/2" 12F W Gr5 Ch.7/8" Height 12,00Mm	2		
101	6020010402-4	Pressure Washer 1/4" Media Industry	6		
102	5024010161-8	Smooth Washer Ø7 X Ø18 X 2,00Mm	6		
103	6020310742-3	Hexagonal Nut 1/4" 20F Unc Gr5 Ch.7/16" Height 5,50Mm	6		
104	6020310147-6	Bolt 1/4" X 3/4" 20F Unc1A Gr5 Rt	6		
105	5530014453-4	Left Support Of Scraper		1	
105	5530014452-6	Right Support Of Scraper			1
106	6020310049-6	Hexagonal Head Bolt 1/2" X 2" 12F W Gr5 Rp	2		
107	6010600786-4	Deph Limiter Ring (40Mm)	1		
108	6020311160-9	French Head Bolt 3/8" X 1" 16F Unc1A Gr2 Rt	2		
109	5352010048-9	Limiter Of Limiter Rim	1		
110	5024010068-9	Smooth Washer Ø13,3 X Ø35,5 X 3,00Mm	2		
111	5024010075-1	Smooth Washer Ø10,3 X Ø25 X 2,00Mm	2		
112	5288010055-6	Left Limiter Ring With Scraper (Deph 40Mm)		1	
112	5288010054-8	Right Limiter Ring With Scaper (Deph 40Mm)			1

• Row W/Rippled Cutting Disc W/"V" Compactor Wheel W/Frieze Of 40mm

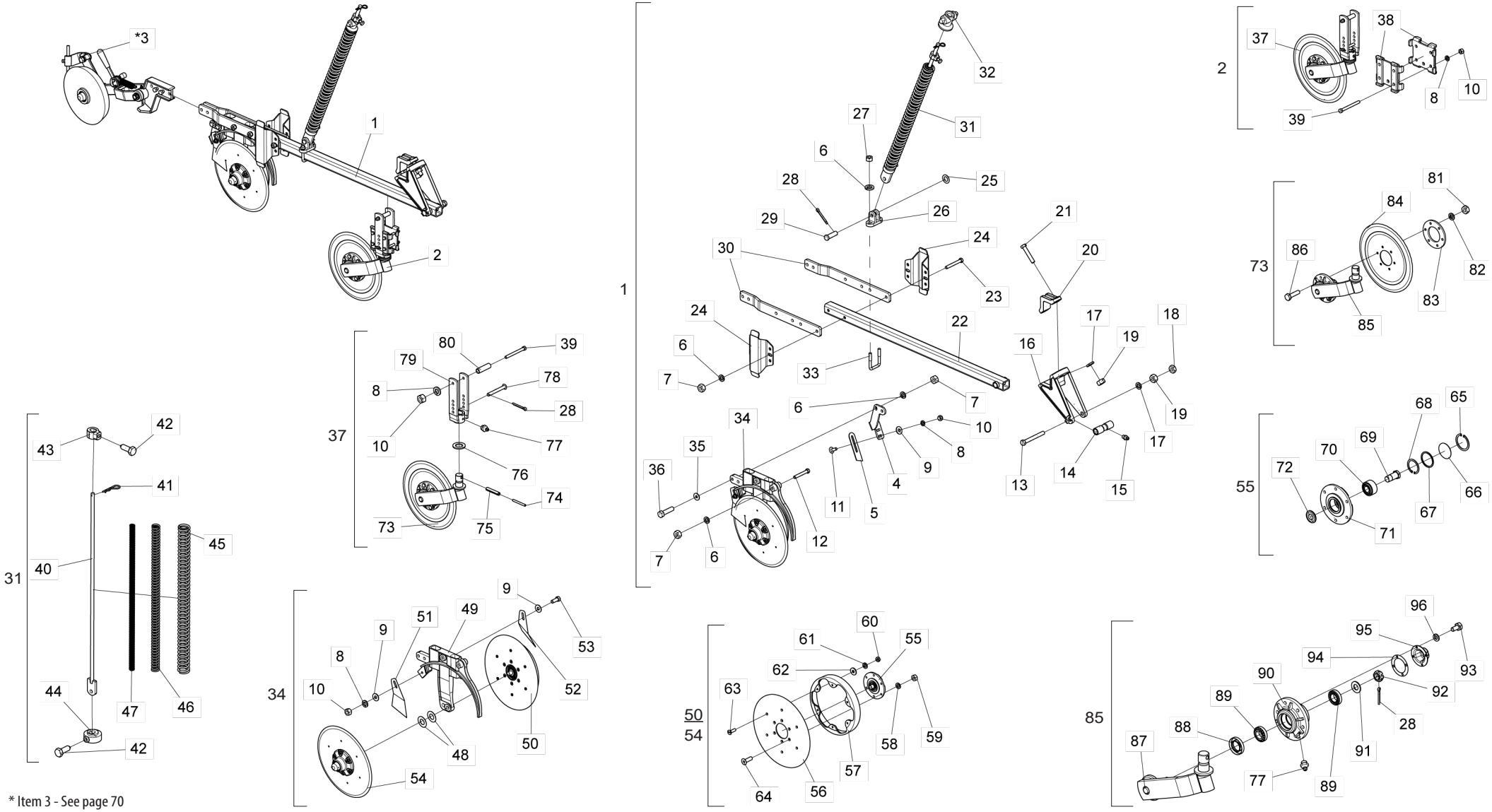

* Item 3 - See page 70

BALDAN

• Table Row W/Rippled Cutting Disc W/"V" Compactor Wheel W/Frieze Of 40mm

Item	Code	Product description	All	Larger Right	Smaller Right	Larger Left	Smaller Left	Side Right	Side Left
1	2517012312-6	Small Left Row Unit W/Frieze Of 40mm(SPDEA)					1		
1	2517012313-4	Small Right Row Unit W/Frieze Of 40mm(SPDEA)			1				
1	2517012314-2	Large Left Row Unit W/Frieze Of 40mm(SPDEA)				1			
1	2517012315-0	Large Right Row Unit W/Frieze Of 40mm(SPDEA)		1					
1	2517012320-7	Large Right Lateral Row Unit W/Frieze Of 40mm(SPDEA)						1	
1	2517012321-5	Small Left Lateral Row Unit W/Frieze Of 40mm(SPDEA)							1
2	5124010337-4	Complete Row Of Rippled Coulter Disc Blade	1						
*3	5124010381-1	Complete Row Of Compactation Wheel Type "V" (SPD)	1						
4	5530014452-6	Right Support Of Scraper		1		1			1
4	5530014453-4	Left Support Of Scraper			1		1	1	
5	5352010048-9	Limiter Of Limiter Rim	1						
6	6020010410-5	Pressure Washer 1/2" Media Industry		8	8	12	12	16	12
7	6020310754-7	Hexagonal Nut 1/2" 12F W Gr5 Ch.7/8" Height 12,00mm		6	6	10	10	14	10
8	6020010406-7	Pressure Washer 3/8" Media Industry	8						
9	5024010075-1	Smooth Washer Ø10,3 X Ø25 X 2,00mm	2						
10	6020310746-6	Hexagonal Nut 3/8" 16F Unc Gr5 Ch.9/16" Height 8,50mm	8						
11	6020311160-9	French Head Bolt 3/8" X 1" 16F Unc1A Gr2 Rt	2						
12	6020311061-0	Hexagonal Head Bolt 1/2" X 3.1/2" 12F W Gr5 Rp		2	2	4	4	4	2
13	6020311082-3	Hexagonal Head Bolt 5/8" X 5.1/2" 11F Unc1A Gr5 Rp	1						
14	5080010539-8	Row Articulation Bushing	1						
15	6020130100-1	Grease Fitting 1/4"	1						
16	5252040056-7	Row Hitch	1						
17	6020010412-1	Pressure Washer 5/8" Media Industry	3						
18	6020310738-5	Hexagonal Nut 5/8" 11F Unc Gr5 Ch.1.1/16" Height 11,00mm	1						
19	6020310760-1	Hexagonal Nut 5/8" 11F Unc Gr5 Ch.1.1/16" Height 15,00mm	3						
20	6010601347-3	Fixation Shank Of Coulter Disc	1						
21	6020311079-3	Hexagonal Head Bolt 5/8" X 3.1/2" 11F Unc1A Gr5 Rp	2						
22	5572015584-1	Square Beam Of50 X 1200mm Complete	1						
23	6020311065-3	Hexagonal Head Bolt 1/2" X 4" 12F W Gr5 Rp		2	2				2
24	5526010018-0	Separator Of Rowas	2						
25	5024010059-0	Smooth Washer Ø16,5 X Ø29 X 1,21mm	1						
26	6010601172-1	Lower Support Of Rod (Small)	1						
27	6020310756-3	Hexagonal Nut 1/2" 12F W Gr5 Ch.3/4" Height 11,00mm	2						
28	6020050101-5	Cotterpin 1/8" X 1"	3						
29	6020310593-5	Pin Ø5/8" X 46mm	1						
30	5136015261-1	Fixation Plate Of Double Disc	2						
31	5566010260-3	Small Rod Of Spring Of 700mm Complete		1	1				1
31	5566010261-1	Smalll Rod Of Spring Of 800mm Complete				1	1	1	
32	6010601280-9	Upper Lock Of Triple Spring	1						
33	5068010081-8	Clamp Of 84 X 64 X R.1/2" W		1	1	3	3	5	3
34	5124018021-2	Fertilizer/Seed Double Disc Right Row W/Frieze 40mm(Decentered) Special			1		1	1	
34	5124018022-0	Fertilizer/Seed Double Disc Left Row W/Frieze 40mm(Decentered) Special		1		1			1
35	5024010068-9	Smooth Washer Ø13,3 X Ø35,5 X 3,00mm	2						

Item	Code	Product description	All	Larger Right	Smaller Right	Larger Left	Smaller Left	Side Right	Side Left
36	6020310049-6	Hexagonal Head Bolt 1/2" X 2" 12F W Gr5 Rp	2						
37	5124010099-5	Rippled Coulter Disc Row	1						
38	5324050014-7	Complete Adjustment Support Guide	2						
39	6020311038-6	Hexagonal Head Bolt 3/8" X 4" 16F Unc1A Gr2 Rp	5						
40	5566010205-0	Rod Of Spring De 1085,5mm				1	1	1	
40	5566040144-9	Rod Of Spring De 935,5mm		1	1				1
41	6020390294-0	Lock Nma - Type "R" Ø3,5 X 67mm(Special)		1	1	1	1	1	1
42	6020310349-5	Hexagonal Head Bolt M12 X 1,75 X 30mm Cl8.8 R Wth Point		2	2	2	2	2	2
43	5080011663-2	Fixation Support Of Spring Rod		1	1	1	1	1	1
44	5530016364-4	Lower Support Of Triple Spring		1	1	1	1	1	1
45	6020250664-2	Helical Spring Ø43 X Ø59 X 700mm External		1	1				1
45	6020250667-7	Helical Spring Ø43 X Ø59 X 800mm External				1	1	1	
46	6020250663-4	Helical Spring Ø27,3 X Ø40 X 700mm Intermediary		1	1				1
46	6020250666-9	Helical Spring Ø27,3 X Ø40 X 800mm Intermediary				1	1	1	
47	6020250662-6	Helical Spring Ø17,5 X Ø25,5 X 700mm Internal		1	1				1
47	6020250665-0	Helical Spring Ø17,5 X Ø25,5 X 800mm Internal				1	1	1	
48	5024010024-7	Smooth Washer Ø20 X Ø38 X 1,21mm	4						
49	5530011576-3	Left Support Of Large Fertilizer/Seed Large Double Disc		1		1			1
49	5530011577-1	Right Support Of Fertilizer And Seed Large Double Disc (Descentrado)			1		1	1	
50	5204010578-6	Complete Right Hub W/Limiter Frieze 40mm(Plan Disc 15" X 4,00mm)		1		1			1
50	5204010579-4	Complete Left Hub W/Limiter Frieze 40mm(Plan Disc 15" X 4,00mm)			1		1	1	
51	5352030057-7	Internal Right Scraper Of Disc	1						
52	5352030056-9	Internal Left Scraper Of Disc	1						
53	6020310054-2	Hexagonal Head Bolt 3/8" X 1" 16F Unc1A Gr2 Rt	1						
54	5204010576-0	Complete Right Hub (Plan Disc 15" X 4,00mm)			1		1	1	
54	5204010577-8	Complete Left Hub (Plan Disc 15" X 4,00mm)		1		1			1
55	5204010451-8	Right Disc Hub	1						
55	5204010452-6	Left Disc Hub	1						
56	2857398003-6	Coulter Plain Disc Blade 15 X 4,00 Hc Rd 80mm + 6H Rd 8,7mm R=57,5mm + 6H Rd 6,9mm	1						
57	6010600786-4	Deph Limiter Ring (40mm)		1	1	1	1	1	1
58	6020010004-5	Pressure Washer M8 Media	6						
59	6020310454-8	Hexagonal Nut M8 X 1,25 Ma Cl8 Ch.13mm H.6,50mm	6						
60	6020311257-5	Hexagonal Nut M6 X 1,00 Ma Cl8 Ch.10mm H.5,00mm		6	6	6	6	6	6
61	6020010122-0	Pressure Washer M6 Media		6	6	6	6	6	6
62	5024010161-8	Smooth Washer Ø7 X Ø18 X 2,00mm		6	6	6	6	6	6
63	6020317441-4	Bolt M6 X 1,00 X 20mm Cl8.8 Rt		6	6	6	6	6	6
64	6020317573-9	Allen Bolt M8 X 1,25 X 25mm Cl12.9 RT	6						
65	6020010289-7	Retaining Ring I-55	1						
66	5096010050-3	Hub Cap	1						
67	6020010095-9	Gascket Ring 047X 052X 2mm	1						
68	6020011053-9	Retaining Ring I-047	1						
69	5420010098-3	Hexagonal Head Bolt 3/4" X 1.7/8" 16F Unf 1A Gr5 Rp - Read Right (Special)	1						
69	5420010099-1	Hexagonal Head Bolt 3/4" X 1.7/8" 16F Unf 1A Gr5 Rp - Read Left (Special)	1						

• Table Row W/Rippled Cutting Disc W/"V" Compactor Wheel W/Frieze Of 40mm

Item	Code	Product description	All	Larger Right	Smaleer Right	Larger Left	Smaller left	Side Right	Side Left
70	6020350933-5	Sphere Bearing Double Row 5204Kp52-Sp6(1º Line)	1						
71	5204010453-4	Hub Of Ø136 X 41mm	1						
72	6020056005-4	Dual Ball Races Bearing Cap 5204Kp52-Sp6 (1ºline)	1						
73	5124010100-2	Row W/Rippled Coulter Disc Blade	1						
74	6020310472-6	Heavy Elastic Pin Ø6 X 55mm	1						
75	6020310510-2	Heavy Elastic Pin Ø10 X 55mm	1						
76	5024010107-3	Smooth Washer Ø36 X Ø61 X 5,00mm	1						
77	6020130108-7	Grease Fitting 1/8"	2						
78	5432010181-9	French Head Pin Ø11,20 X 90mm	1						
79	5530010406-0	Depth Regulator Support	1						
80	5080020787-5	Bushing Of Ø14 X Ø19 X 65mm	1						
81	6020310822-5	Hexagonal Nut M10 X 1,50 Ma Cl8 Ch.17mm H.8,00mm	6						
82	6020010394-0	Pressure Washer M10 Media	6						
83	5284010001-4	Flange Of Disc Hub	1						
84	3255397388-0	Rippled Plain Disc Blade 14 X 4,00 Hc Rd 80mm + 6H Rd 10,3mm D=115mm Doble Bevel	1						
85	5530010405-2	Support Of Disc W/Hub	1						
86	6020310980-9	Hexagonal Head Bolt M10 X 1,50 X 40mm Cl8.8 Rt	6						
87	5530160187-4	Support W/Shaft Of Disc	1						
88	6020350244-6	Retainer Ø35,00 X Ø58,00 X 10,00mm	1						
89	6020350077-0	Bearing 44610/49	2						
90	5204010090-3	Disc Hub	1						
91	5024010258-4	Smooth Washer Ø20 X Ø38,5 X 3,00mm	1						
92	6020310797-0	Nut 3/4" 16F Unf Gr5 Ch.1.1/16" Height 13,00mm	1						
93	6020311000-9	Hexagonal Head Bolt 1/4" X 1/2" 20F Unc1A Gr5 Rt	4						
94	6020190098-3	Gascket Ø50,3 X Ø73,5 X 1/64"	1						
95	6020050640-8	Hub Cap	1						
96	6020010402-4	Pressure Washer 1/4" Media Industry	4						

• Row W/"V" Compactor Wheel W/Frieze Of 40mm

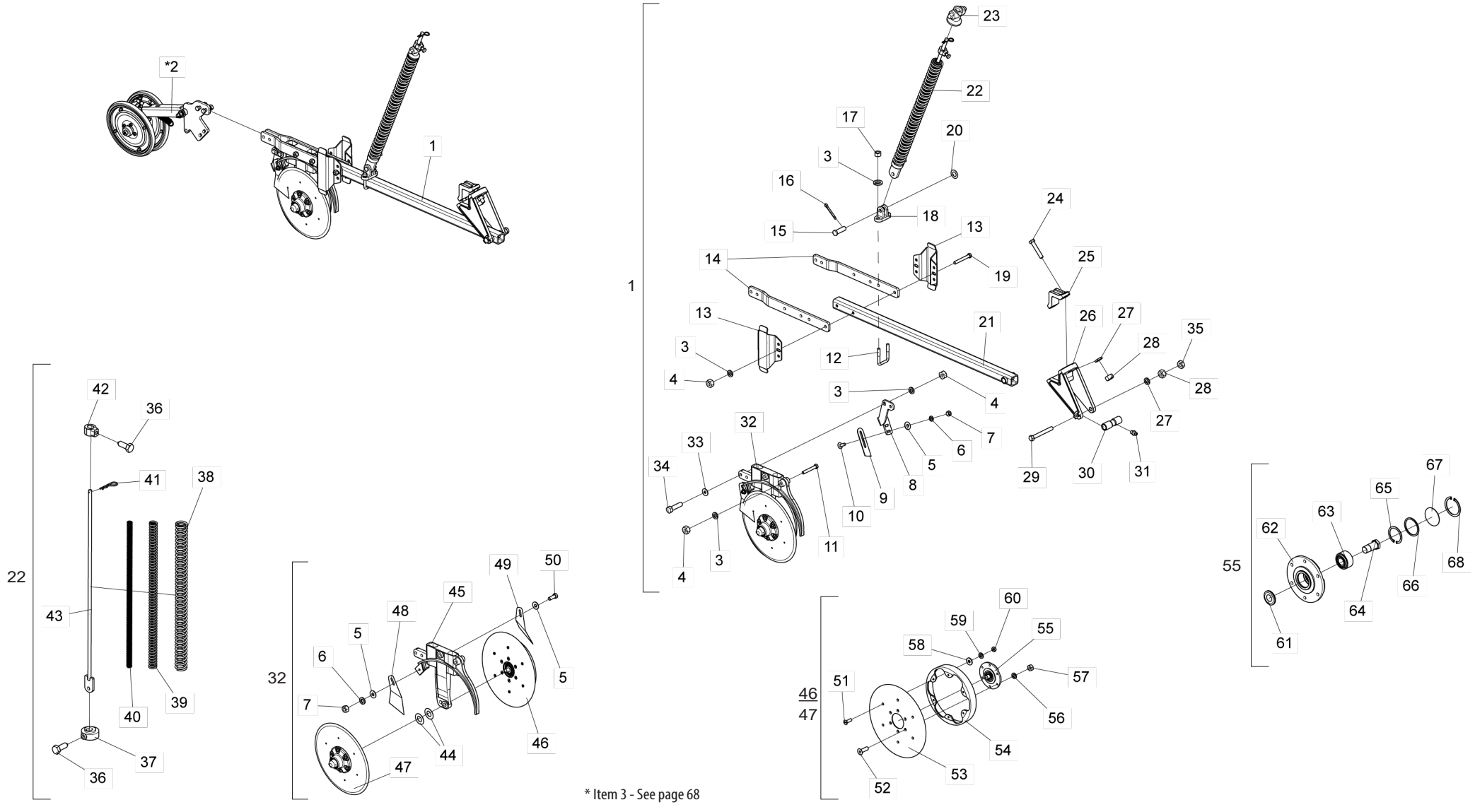

* Item 3 - See page 68

• Table Row W/"V" Compactor Wheel W/Frieze Of 40mm

Item	Code	Product description	All	Larger Right	Smaller Right	Larger Left	Smaller Left	Side Right	Side Left
1	2517012312-6	Small Left Row Unit W/Frieze Of 40mm(SPDEA)					1		
1	2517012313-4	Small Right Row Unit W/Frieze Of 40mm(SPDEA)			1				
1	2517012314-2	Large Left Row Unit W/Frieze Of 40mm(SPDEA)				1			
1	2517012315-0	Large Right Row Unit W/Frieze Of 40mm(SPDEA)		1					
1	2517012320-7	Large Right Lateral Row Unit W/Frieze Of 40mm(SPDEA)						1	
1	2517012321-5	Small Left Lateral Row Unit W/Frieze Of 40mm(SPDEA)							1
*2	5124010381-1	Complete Row Of Compactation Wheel Type "V" (SPD)	1						
3	6020010410-5	Pressure Washer 1/2" Media Industry		8	8	12	12	16	12
4	6020310754-7	Hexagonal Nut 1/2" 12F W Gr5 Ch.7/8" Height 12,00mm		6	6	10	10	14	10
5	5024010075-1	Smooth Washer Ø10,3 X Ø25 X 2,00mm	2						
6	6020010406-7	Pressure Washer 3/8" Media Industry	2						
7	6020310746-6	Hexagonal Nut 3/8" 16F Unc Gr5 Ch.9/16" Height 8,50mm	2						
8	5530014453-4	Left Support Of Scraper			1		1	1	
8	5530014452-6	Right Support Of Scraper		1		1			1
9	5352010048-9	Limiter Of Limiter Rim	1						
10	6020311160-9	French Head Bolt 3/8" X 1" 16F Unc1A Gr2 Rt	2						
11	6020311061-0	Hexagonal Head Bolt 1/2" X 3.1/2" 12F W Gr5 Rp		2	2	4	4	4	2
12	5068010081-8	Clamp Of 84 X 64 X R.1/2" W		1	1	3	3	5	3
13	5526010018-0	Separator Of Rowas	2						
14	5136015261-1	Fixation Plate Of Double Disc	2						
15	6020310593-5	Pin Ø5/8" X 46mm	1						
16	6020050101-5	Cotterpin 1/8" X 1"	1						
17	6020310756-3	Hexagonal Nut 1/2" 12F W Gr5 Ch.3/4" Height 11,00mm	2						
18	6010601172-1	Lower Support Of Rod (Small)	1						
19	6020311065-3	Hexagonal Head Bolt 1/2" X 4" 12F W Gr5 Rp		2	2				2
20	5024010059-0	Smooth Washer Ø16,5 X Ø29 X 1,21mm	1						
21	5572015584-1	Square Beam Of50 X 1200mm Complete	1						
22	5566010260-3	Small Rod Of Spring Of 700mm Complete		1	1				1
22	5566010261-1	Smalll Rod Of Spring Of 800mm Complete				1	1	1	
23	6010601280-9	Upper Lock Of Triple Spring	1						
24	6020311079-3	Hexagonal Head Bolt 5/8" X 3.1/2" 11F Unc1A Gr5 Rp	2						
25	6010601347-3	Fixation Shank Of Coulter Disc	1						
26	5252040056-7	Row Hitch	1						
27	6020010412-1	Pressure Washer 5/8" Media Industry	3						
28	6020310760-1	Hexagonal Nut 5/8" 11F Unc Gr5 Ch.1.1/16" Height 15,00mm	3						
29	6020311082-3	Hexagonal Head Bolt 5/8" X 5.1/2" 11F Unc1A Gr5 Rp	1						
30	5080010539-8	Row Articulation Bushing	1						
31	6020130100-1	Grease Fitting 1/4"	1						
32	5124018021-2	Fertilizer/Seed Double Disc Right Row W/Frieze 40mm(Decentered) Special			1		1	1	
32	5124018022-0	Fertilizer/Seed Double Disc Left Row W/Frieze 40mm(Decentered) Special		1		1			1
33	5024010068-9	Smooth Washer Ø13,3 X Ø35,5 X 3,00mm	2						
34	6020310049-6	Hexagonal Head Bolt 1/2" X 2" 12F W Gr5 Rp	2						
35	6020310738-5	Hexagonal Nut 5/8" 11F Unc Gr5 Ch.1.1/16" Height 11,00mm	1						
36	6020310349-5	Hexagonal Head Bolt M12 X 1,75 X 30mm Cl8.8 R Wth Point		2	2	2	2	2	2

Item	Code	Product description	All	Larger Right	Smaller Right	Larger Left	Smaller Left	Side Right	Side Left
37	5530016364-4	Lower Support Of Triple Spring		1	1	1	1	1	1
38	6020250667-7	Helical Spring Ø43 X Ø59 X 800mm External				1	1	1	
38	6020250664-2	Helical Spring Ø43 X Ø59 X 700mm External		1	1				1
39	6020250666-9	Helical Spring Ø27,3 X Ø40 X 800mm Intermediary				1	1	1	
39	6020250663-4	Helical Spring Ø27,3 X Ø40 X 700mm Intermediary		1	1				1
40	6020250665-0	Helical Spring Ø17,5 X Ø25,5 X 800mm Internal				1	1	1	
40	6020250662-6	Helical Spring Ø17,5 X Ø25,5 X 700mm Internal		1	1				1
41	6020390294-0	Lock Nma - Type "R" Ø3,5 X 67mm(Special)		1	1	1	1	1	1
42	5080011663-2	Fixation Support Of Spring Rod		1	1	1	1	1	1
43	5566010205-0	Rod Of Spring De 1085,5mm				1	1	1	
43	5566040144-9	Rod Of Spring De 935,5mm		1	1				1
5	5024010075-1	Smooth Washer Ø10,3 X Ø25 X 2,00mm	2						
6	6020010406-7	Pressure Washer 3/8" Media Industry	1						
7	6020310746-6	Hexagonal Nut 3/8" 16F Unc Gr5 Ch.9/16" Height 8,50mm	1						
44	5024010024-7	Smooth Washer Ø20 X Ø38 X 1,21mm	4						
45	5530011576-3	Left Support Of Large Fertilizer/Seed Large Double Disc		1		1			1
45	5530011577-1	Right Support Of Fertilizer And Seed Large Double Disc (Descentrado)			1		1	1	
46	5204010578-6	Complete Right Hub W/Limiter Frieze 40mm(Plan Disc 15" X 4,00mm)		1		1			1
46	5204010579-4	Complete Left Hub W/Limiter Frieze 40mm(Plan Disc 15" X 4,00mm)			1		1	1	
47	5204010576-0	Complete Right Hub (Plan Disc 15" X 4,00mm)			1		1	1	
47	5204010577-8	Complete Left Hub (Plan Disc 15" X 4,00mm)		1		1			1
48	5352030057-7	Internal Right Scraper Of Disc	1						
49	5352030056-9	Internal Left Scraper Of Disc	1						
50	6020310054-2	Hexagonal Head Bolt 3/8" X 1" 16F Unc1A Gr2 Rt	1						
53	2857398003-6	Coulter Plain Disc Blade 15 X 4,00 Hc Rd 80mm + 6H Rd 8,7mm R=57,5mm + 6H Rd 6,9mm	1						
58	5024010161-8	Smooth Washer Ø7 X Ø18 X 2,00mm		6	6	6	6	6	6
55	5204010451-8	Right Disc Hub	1						
55	5204010452-6	Left Disc Hub	1						
54	6010600786-4	Deph Limiter Ring (40mm)		1	1	1	1	1	1
56	6020010004-5	Pressure Washer M8 Media	6						
59	6020010122-0	Pressure Washer M6 Media		6	6	6	6	6	6
57	6020310454-8	Hexagonal Nut M8 X 1,25 Ma Cl8 Ch.13mm H.6,50mm	6						
60	6020311257-5	Hexagonal Nut M6 X 1,00 Ma Cl8 Ch.10mm H.5,00mm		6	6	6	6	6	6
51	6020317441-4	Bolt M6 X 1,00 X 20mm Cl8.8 Rt		6	6	6	6	6	6
52	6020317573-9	Allen Bolt M8 X 1,25 X 25mm Cl12.9 RT	6						
67	5096010050-3	Hub Cap	1						
62	5204010453-4	Hub Of Ø136 X 41mm	1						
64	5420010098-3	Hexagonal Head Bolt 3/4" X 1.7/8" 16F Unf 1A Gr5 Rp - Read Right (Special)	1						
64	5420010099-1	Hexagonal Head Bolt 3/4" X 1.7/8" 16F Unf 1A Gr5 Rp - Read Left (Special)	1						
66	6020010095-9	Gascket Ring 047X 052X 2mm	1						
68	6020010289-7	Retaining Ring I-55	1						
65	6020011053-9	Retaining Ring I-047	1						
61	6020056005-4	Dual Ball Races Bearing Cap 5204Kp52-Sp6 (1ºline)	1						
63	6020350933-5	Sphere Bearing Double Row 5204Kp52-Sp6(1º Line)	1						

• Complete Compactation Wheel Type "V"

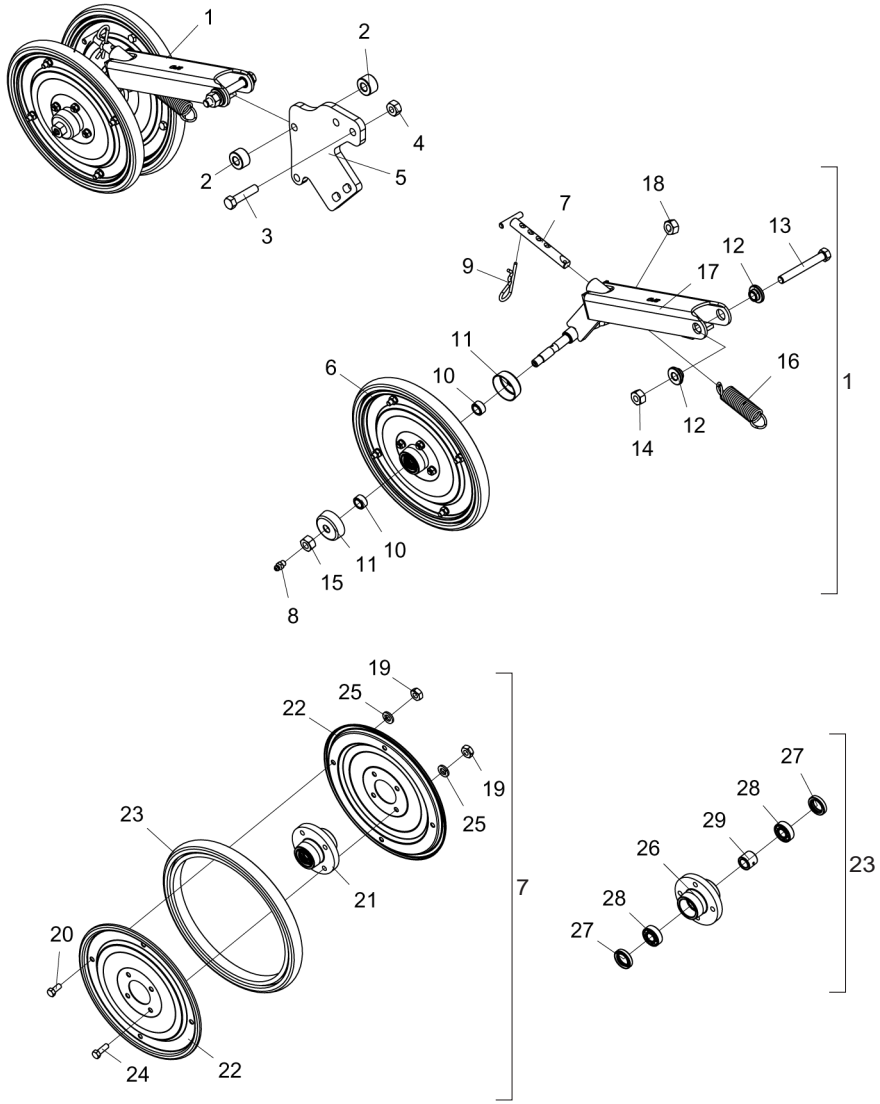

Item	Code	Product description	All
1	5124010413-3	Row Of Compactation Wheel Type "V" (Spd)	1
2	5080020772-7	Bushing Of Ø14,3 X Ø1.1/4" X 18,5Mm	2
3	6020312060-8	Hexagonal Head Bolt 1/2" X 2.1/4" 12F W Gr5 Rp	2
4	6020310809-8	Self-Locking Nut With Nylon 1/2" 12F W Gr5 Ch.3/4" H.15,50Mm	2
5	5530010827-9	Fixation Support Of Wheel	1
6	5498090024-2	Spare Compaction Wheel	2
7	5432060014-9	Handle 5/8" X 131Mm	1
8	6020130100-1	Grease Fitting 1/4"	2
9	6020390308-4	Lock Nma - Type "R" Ø4,5 X 80Mm	1
10	5080020710-7	Bushing Of Ø15 X Ø22,22 X 12Mm	4
11	5096010033-3	Hub Cap	4
12	5080020484-1	Bushing Of Ø13,1 X Ø31,5 X 12,5Mm	2
13	6020311065-3	Hexagonal Head Bolt 1/2" X 4" 12F W Gr5 Rp	1
14	6020310809-8	Self-Locking Nut With Nylon 1/2" 12F W Gr5 Ch.3/4" H.15,50Mm	1
15	6020310736-9	Hexagonal Nut 9/16" 18F Unf Gr5 Ch.7/8" Height 12,50Mm	1
16	6020250658-8	Helical Spring Ø21,5 X Ø28,5 X 95Mm	1
17	5530011808-8	Support "V" Wheel(Spd)	1
18	6020310737-7	Hexagonal Nut 9/16" 18F Rf/Esq Unf Gr5 Ch.7/8" Height 12,50Mm	1
19	6020310454-8	Hexagonal Nut M8 X 1,25 Ma Cl8 Ch.13Mm H.6,50Mm	16
20	6020311269-9	Hexagonal Head Bolt M8 X 1,25 X 20Mm Cl8.8 Rt	8
21	5204110018-4	Complete Hub Of Wheel	2
22	5288020025-9	Wheel Ring	4
23	6020010808-9	Rim 300 X 25Mm	2
24	6020310448-3	Hexagonal Head Bolt M8 X 1,25 X 25Mm Cl8.8 Rt	8
25	6020010004-5	Pressure Washer M8 Media	16
26	5204110017-6	Wheel Hub	2
27	6020350211-0	Retainer Ø22,00 X Ø35,00 X 6,70Mm	4
28	6020350871-1	Sphere Rigid Bearing 6202 (Skf-Nsk-Timken)	4
29	5080020655-0	Bushing Of Ø16 X Ø25 X 22Mm	2

• Large Concave Depth Wheel W/Regulator Support

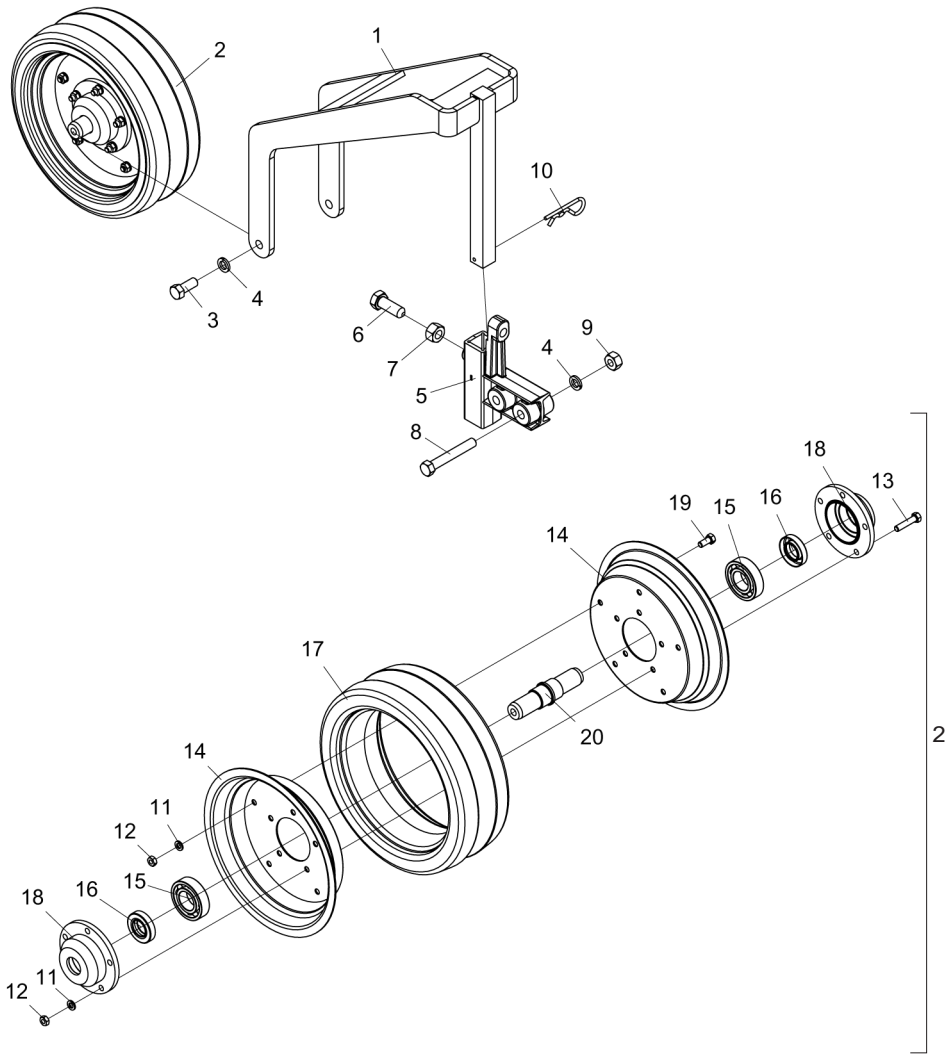

Item	Code	Product description	All
1	5530012143-7	Wheel Support (Spd-E)	1
2	5498100018-0	Complete Compaction Wheel Concav	1
3	6020310051-8	Hexagonal Head Bolt 1/2" X 1.1/4" 12F W Gr5 Rt	2
4	6020010410-5	Pressure Washer 1/2" Media Industry	4
5	5530180106-7	Support Of Regulator	1
6	6020311069-6	Hexagonal Head Bolt 5/8" X 1.3/4" 11F Unc1A Gr5 Rt Wth Point	1
7	6020310765-2	Hexagonal Nut 5/8" 11F Unc Gr5 Ch.15/16" Height 14,00Mm	1
8	6020311065-3	Hexagonal Head Bolt 1/2" X 4" 12F W Gr5 Rp	2
9	6020310754-7	Hexagonal Nut 1/2" 12F W Gr5 Ch.7/8" Height 12,00Mm	2
10	6020390308-4	Lock Nma - Type "R" Ø4,5 X 80Mm	1
11	6020010404-0	Pressure Washer 5/16" Media Industry	10
12	6020310744-0	Hexagonal Nut 5/16" 18F Unc Gr5 Ch.1/2" Height 6,50Mm	10
13	6020311017-3	Hexagonal Head Bolt 5/16" X 1.1/2" 18F Unc Gr2 Rt	5
14	5018010016-1	Rubber Wheel Rim	2
15	6020350007-9	Bearing 6206(Skf-Nsk-Timken)	2
16	6020350204-7	Retainer Ø25,00 X Ø47,00 X 10,00Mm	2
17	6020010813-5	Convex Compactation Rim 99-8	1
18	5204020047-9	Wheel Hub	2
19	6020312020-9	Hexagonal Head Bolt 5/16" X 3/4" 18F Unc1A Gr5 Rt	5
20	5080030028-0	Large Bushing Of Compactor Wheel	1

• Complete Heavy Iron Compactation Wheel

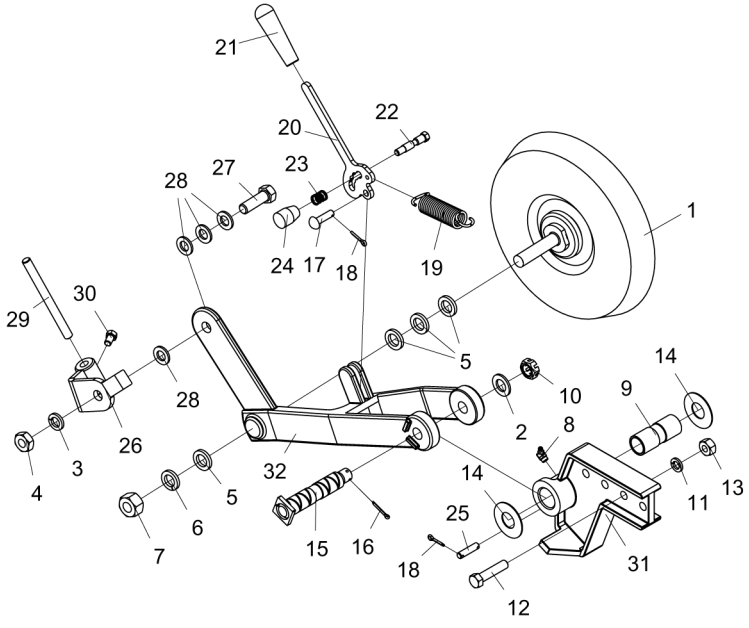

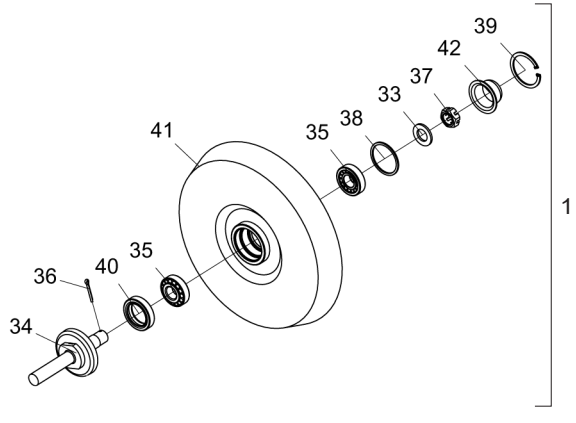

Item	Code	Product description	All	Right	Left
1	5498010149-8	Iron Compaction Wheel (Heavy)	1		
2	6020010513-6	Plain Washer Ø20 X Ø35 X 3Mm	1		
3	6020010412-1	Pressure Washer 5/8" Media Industry	1		
4	6020310738-5	Hexagonal Nut 5/8" 11F Unc Gr5 Ch.1.1/16" Height 11,00Mm	1		
5	5024010302-5	Smooth Washer Ø20 X Ø32 X 4,75Mm	4		
6	6020010414-8	Pressure Washer 3/4" Media Industry	1		
7	6020310817-9	Hexagonal Nut 3/4" 16F Unf Gr5 Ch.1.1/4" Height 18,50Mm	1		
8	6020130110-9	Grease Fitting 1/8"	1		
9	5080011444-3	Large Bushing Of Iron Compactor Wheel	1		
10	6020310797-0	Nut 3/4" 16F Unf Gr5 Ch.1.1/16" Height 13,00Mm	1		
11	6020010410-5	Pressure Washer 1/2" Media Industry	2		
12	6020312060-8	Hexagonal Head Bolt 1/2" X 2.1/4" 12F W Gr5 Rp	2		
13	6020310754-7	Hexagonal Nut 1/2" 12F W Gr5 Ch.7/8" Height 12,00Mm	2		
14	5024010560-5	Smooth Washer Ø26 X Ø58 X 1,52Mm	2		
15	5432010372-2	Articulation Pin	1		
16	6020050101-5	Cotterpin 1/8" X 1"	1		
17	6020311241-9	French Head Pin Ø9,8 X 33Mm	1		
18	6020050099-0	Cotterpin 1/8" X 3/4"	3		
19	6020250658-8	Helical Spring Ø21,5 X Ø28,5 X 95Mm	1		
20	5008010230-2	Pressure Adjustment Handle	1		
21	6020050724-2	Rubber Cable	1		
22	5420010078-9	Hexagonal Head Bolt Ø1/2" X 63Mm 16F Unc 1A R.3/8"	1		
23	6020250577-8	Helical Spring Ø12,5 X Ø16,5 X 19Mm	1		
24	6020430203-3	Handle Pma 330 Thread 3/8" X 16 Fios	1		
25	5432010373-0	Pin Ø3/8" X 40mm	1		
26	5530014462-3	Left Cleaner Axis Support		1	
26	5530014461-5	Right Cleaner Axis Support			1
27	6020310180-8	Hexagonal Head Bolt 5/8" X 2" 11F Unc1A Gr5 Rp	1		
28	5024010154-5	Smooth Washer Ø16 X Ø29 X 3,00Mm	4		
29	5352010053-5	Scraper Of 150Mm	1		
30	6020311030-0	Hexagonal Head Bolt 3/8" X 5/8" 16F Unc1A Gr2 Rt	1		
31	5530014456-9	Fixation Support Of Wheel	1		
32	5530014454-2	Right Support Of Iron Wheel		1	
32	5530014455-0	Left Support Of Iron Wheel			1
33	6020010513-6	Plain Washer Ø20 X Ø35 X 3Mm	1		
34	5232010977-9	Complete Shaft Of Steel Compactation Wheel	1		
35	6020350087-7	Bearing 30204	2		
36	6020050101-5	Cotterpin 1/8" X 1"	1		
37	6020310797-0	Nut 3/4" 16F Unf Gr5 Ch.1.1/16" Height 13,00Mm	1		
38	6020010095-9	Gascket Ring 047X 052X 2Mm	1		
39	6020010289-7	Retaining Ring I-55	1		
40	6020350268-3	Retainer Ø36,00 X Ø52,00 X 11,00Mm	1		
41	5498010150-1	Iron Compaction Wheel (Heavy)	1		
42	6020050641-6	Hub Cap	1		

• Lateral Transport Kit SPDE-A (Optional)

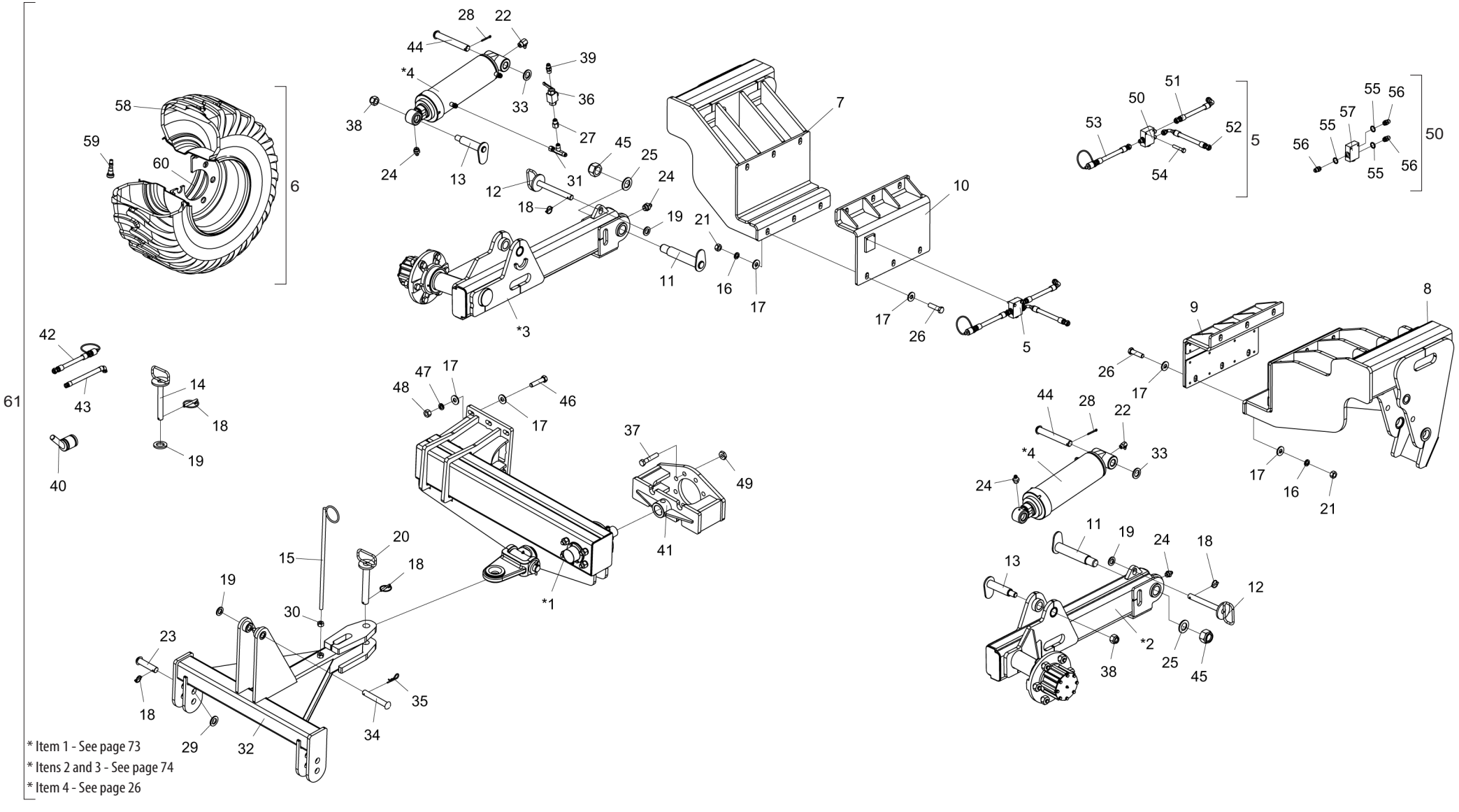

* Item 1 - See page 73
* Itens 2 and 3 - See page 74
* Item 4 - See page 26

• Table Lateral Transport Kit SPDE-A (Optional)

Item	Code	Product description	All
*1	5530015201-4	Complete Transport Support	1
*2	5530015182-4	Complete Left Support Of Wheel	1
*3	5530015183-2	Complete Right Support Of Wheel	1
*4	6020055904-8	Hydraulic Cylinder "O.D" Ø2" X Ø5" X 256Mm(Course) X 605Mm(Closed)	2
5	5528010956-7	Hydarulic System SPDEA Lateral Transport W/Hydraulic Wheel Support	1
6	5498100070-9	Complete Wheel 400X60 14 Ply	1
6	5498010387-3	Right Complete Wheel 400X60 14 Ply	1
7	5530015174-3	Small Support Of Wheel	1
8	5530015173-5	Large Support Of Wheel	1
9	5530015175-1	Fixation Support Of Large Wheel	1
10	5530015176-0	Articulation Support Of Small Wheel	1
11	5432010484-2	Pin Of Ø45,3 X 205Mm Complete	2
12	5432060023-8	Pin Ø1" X 210Mm	2
13	5432010482-6	Pin Of Ø37,5 X 140Mm Complete	2
14	5432010486-9	Pin Ø1" X 197Mm	2
15	5530060020-3	Hoses Support	2
16	6020010403-2	Pressure Washer M20 Media	12
17	5024010007-7	Smooth Washer Ø20,3 X Ø46,5 X 4,75Mm	36
18	6020390293-2	Lock Ø5,75 X 40Mm	7
19	5024010039-5	Smooth Washer Ø26,2 X Ø44 X 4,75Mm	5
20	5432010025-1	Pin Ø1.1/4" X 215Mm	1
21	6020311265-6	Hexagonal Nut M20 X 2,50 Ma Cl8 Ch.30Mm H.16,00Mm	12
22	6020130112-5	Grease Fitting 1/8"	2
23	6020310660-5	Pin Ø28 x 105mm	2
24	6020130108-7	Grease Fitting 1/8"	4
25	5024010130-8	Smooth Washer Ø39 X Ø66 X 4,75Mm(Galvanised)	2
26	6020311006-8	Hexagonal Head Bolt M20 X 2,50 X 75Mm Cl8.8 Rp	12
27	5412010104-0	Nipple R.1/2"(G) X 3/4" Unf X 45Mm With Hexagonal 1"	1
28	6020050116-3	Cotterpin 1/4" X 2"	2
29	5024010192-8	Smooth Washer Ø30 X Ø52 X 4,75Mm(Galvanised)	2
30	6020310760-1	Hexagonal Nut 5/8" 11F Unc Gr5 Ch.1.1/16" Height 15,00Mm	2
31	5412050018-2	T Nipple	1
32	5084010236-7	Lifting Hitch Drawbar	1
33	5024010061-1	Smooth Washer Ø33,5 X Ø53,5 X 4,75Mm	2
34	5432010092-8	Pin Ø1″X 150mm	1
35	6020390308-4	Lock Nma - Type "R" Ø4,5 X 80Mm	1

Item	Code	Product description	All
36	6020430194-0	Sphere Valve 1/2" Npt Stauff:Bbvm20080200M / Gemels 1111Ab-	2
37	6020312005-5	Hexagonal Head Bolt 3/4" X 4" 16F Unf1A Gr5 Rp	8
38	6020310804-7	Self-Locking Nut With Nylon 1" 14F Uns Gr5 Ch.1.1/2" H.28,50Mm	2
39	5412010099-0	Nipple R.1/2" Npt X R.3/4" Unf X 50Mm With Hexagonal 7/8"	1
40	5138010022-7	Wrench De 1.1/2"	1
41	5530015192-1	Fixation Support Of Drawbar	1
42	5372011142-6	Hose Ø3/8" X 8000Mm With 1Trg And 1Trf With Male Quickly Coupling	1
43	6020250688-0	High Pressure Hydraulic Hose 3/8" X 3000Mm With 1Tcg And 1Trg (Sae 100R2 At -	1
44	5432010075-8	French Head Pin Ø30,53 X 205Mm	2
45	6020311230-3	Self-Locking Nut With Nylon 1.1/2" 12F Unf Gr5 Ch.2.1/4" H.39,00Mm	2
46	6020311098-0	Hexagonal Head Bolt 3/4" X 3.1/2" 10F Unc1A Gr5 Rp	6
47	6020010414-8	Pressure Washer 3/4" Media Industry	6
48	6020310770-9	Hexagonal Nut 3/4" 10F Unc Gr5 Ch.1.7/32" Height 18,50Mm	6
49	6020310745-8	Hexagonal Nut 3/4" 16F Unf Gr5 Ch.1.1/4" Height 11,00Mm	8
50	5224010106-8	Oil Distributor	1
51	6020251013-5	High Pressure Hydraulic Hose 3/8" X 900Mm With 1Tcg And 1Trg (Sae 100R2 At - P.T.4800Psi)	1
52	6020250918-8	High Pressure Hydraulic Hose 3/8" X 3200Mm With 1Tcg 90º And 1Trg (Sae 100R2 At -	1
53	5372011142-6	Hose Ø3/8" X 8000Mm With 1Trg And 1Trf With Male Quickly Coupling	1
54	6020310986-8	Hexagonal Head Bolt 5/16" X 1.3/4" 18F Unc1A Gr5 Rp	2
55	6020010022-3	O´Ring 2-114 N3006-90Nbr (15,54)	3
56	5412010035-4	Nipple R.3/4" Unf X R.3/4" Unf X 38Mm With Hexagonal 7/8"	3
57	6020430204-1	Flow Divider Valve Hfb030731 - Hydraulic Designer	1
58	6020310415-7	Tyre 400/60 15.5/14 Traction	1
59	6020410040-6	Tyre Valve Tr-618 A	1
60	6020010817-8	Rim Ag 13,00 X 15.1/2"	1
61	KCJTRANLASPDEA	Lateral Transport Kit (Semi-Hydraulic) SPDEA	1

• Complete Transport Support

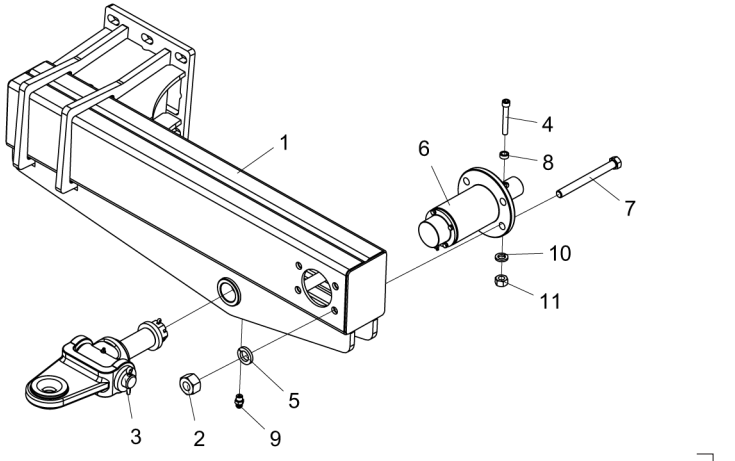

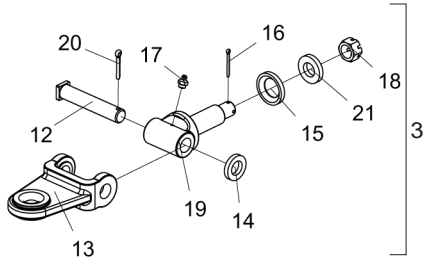

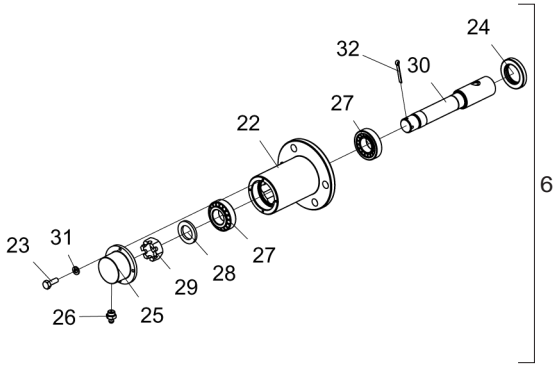

Item	Code	Product description	All
1	5530015200-6	Support Of Transport	1
2	6020310770-9	Hexagonal Nut 3/4" 10F Unc Gr5 Ch.1.7/32" Height 18,50Mm	4
3	5332010084-0	Complete Hitch Shackle	1
4	6020310110-7	Allen Bolt C/C 1/2" X 3.1/2" 12F W Cl12.9 Rp (Phosphated)	1
5	6020010414-8	Pressure Washer 3/4" Media Industry	4
6	5204010425-9	Hub	1
7	6020311117-0	Hexagonal Head Bolt 3/4" X 8" 10F Unc1A Gr5 Rp	4
8	5080020168-0	Bushing Of Ø13,49 X Ø7/8" X 10Mm	1
9	6020130100-1	Grease Fitting 1/4"	1
10	6020010410-5	Pressure Washer 1/2" Media Industry	1
11	6020310756-3	Hexagonal Nut 1/2" 12F W Gr5 Ch.3/4" Height 11,00Mm	1
12	5432040003-4	Square Head Pin Ø37,5 X 190Mm	1
13	6010602368-1	Support Type "U" Of Shackle	1
14	5024010217-7	Smooth Washer Ø39 X Ø68 X 12,00Mm	1
15	5024010635-0	Washer De Ø52,6 X Ø87 X 12,00Mm	1
16	6020050118-0	Cotterpin 1/4" X 2.1/2"	1
17	6020130108-7	Grease Fitting 1/8"	1
18	6020310857-8	Nut 1.1/2" 12F Unf Gr2 Ch.2" Height 30,00Mm	1
19	5252010197-7	External Hitch Of Shackle	1
20	6020050122-8	Cotterpin 3/8" X 2.1/2"	1
21	5024010332-7	Smooth Washer Ø39 X Ø75 X 12,50Mm	1
22	5204010426-7	Hub Of Balanceiro Support	1
23	6020310016-0	Hexagonal Head Bolt 1/4" X 3/4" 20F Unc1A Gr5 Rt	4
24	6020350206-3	Retainer Ø50.80 X Ø81,00 X 11.90Mm	1
25	5538010019-2	Cover Of Wheel Hub	1
26	6020130108-7	Grease Fitting 1/8"	1
27	6020350068-0	Bearing 32208	2
28	5024010286-0	Smooth Washer Ø38,4 X Ø61 X 6,00Mm	1
29	5456020009-1	Nut 1.1/2" 12F	1
30	5232011515-9	Shaft Hub	1
31	6020010402-4	Pressure Washer 1/4" Media Industry	4
32	6020050116-3	Cotterpin 1/4" X 2"	1

• Wheel Support

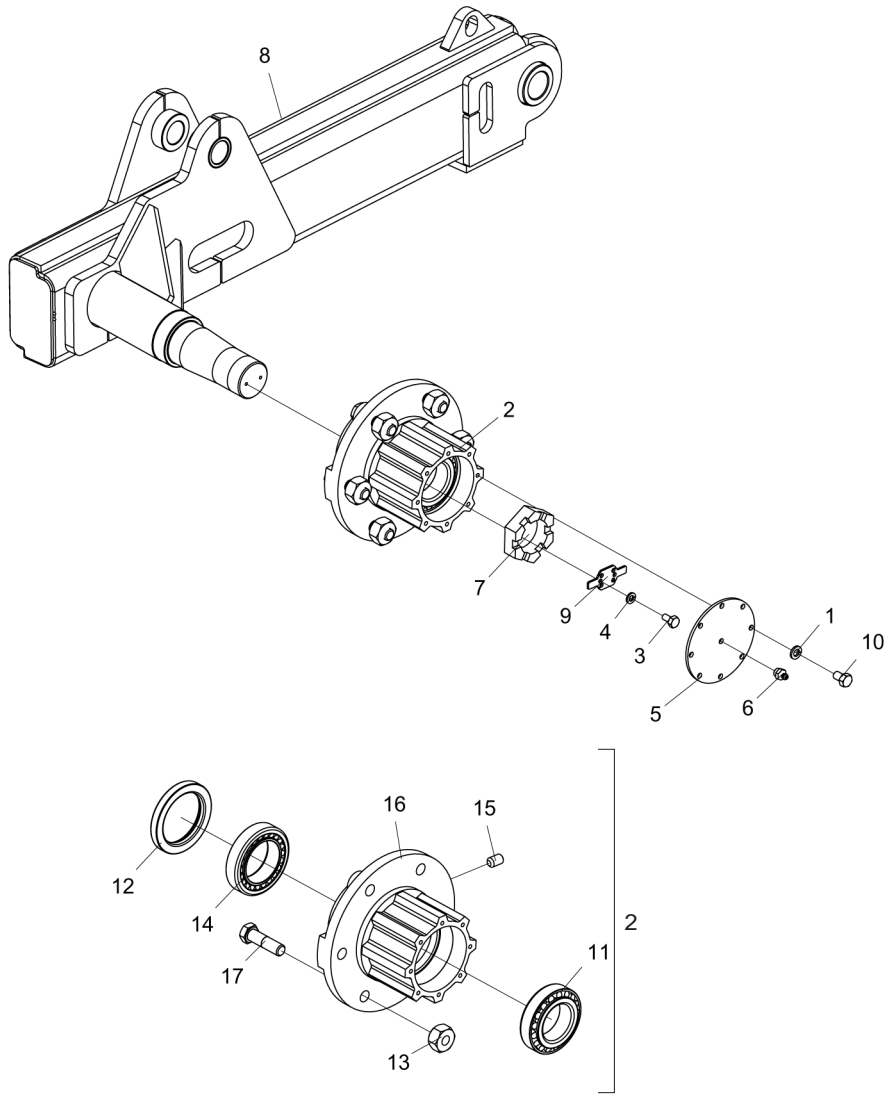

Item	Code	Product description	All	Right	Left
1	6020010404-0	Pressure Washer 5/16" Media Industry	8		
2	5204010289-2	Wheel Hub	1		
3	6020311000-9	Hexagonal Head Bolt 1/4" X 1/2" 20F Unc1A Gr5 Rt	2		
4	6020010402-4	Pressure Washer 1/4" Media Industry	2		
5	5538010023-0	Hub Cover	1		
6	6020130108-7	Grease Fitting 1/8"	1		
7	5456020010-5	Nut 2.1/2" 12F	1		
8	5530015185-9	Right Support Of Wheel		1	
8	5530015184-0	Left Support Of Wheel			1
9	5558010080-4	Lock(Large)	1		
10	6020311020-3	Hexagonal Head Bolt 5/16" X 1/2" 18F Unc1A Gr2 Rt	8		
11	6020350855-0	Bearing K-3982 / K-3920 (First Line)	1		
12	6020350280-2	Retainer Ø87,30 X Ø120,80 X 14,30Mm	1		
13	6020310803-9	Conic Hexagonal Nut 3/4" 16F Unf Gr5 Ch.1.1/2" Height 22,00Mm	6		
14	6020350854-1	Bearing K-33287 / K-33462 (First Line)	1		
15	6020310096-8	Allen Bolt S/C 5/16" X 1/2" 18F Unc1A Cl12.9 Rt (Phosphated)	2		
16	5204010037-7	Wheel Hub (Spare)	1		
17	6020311106-4	Hexagonal Head Bolt 3/4" X 2.3/4" 16F Unf1A Gr5 Rp	6		

• Stickers - Main Frame

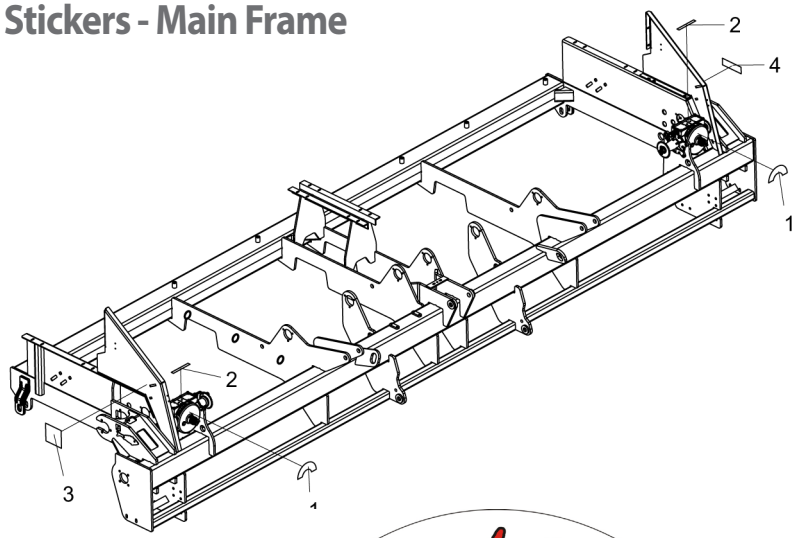

Item	Code	Product description	All
1	6020070838-8	Sticker Speed Box (Easy/Precise/Secure) (200 X 100Mm)	2
2	6020070301-7	Sticker For Fertilizer Hopper Speed Box	2
3	5206010307-0	Sticker Of Gear And Chains Warning (145 X 150Mm)	1
4	6020070886-8	Sticker Lubricate And Retighten (58 X 195Mm)	1

Item 1

Item 2

Item 3

Item 4

• Stickers - Deposit

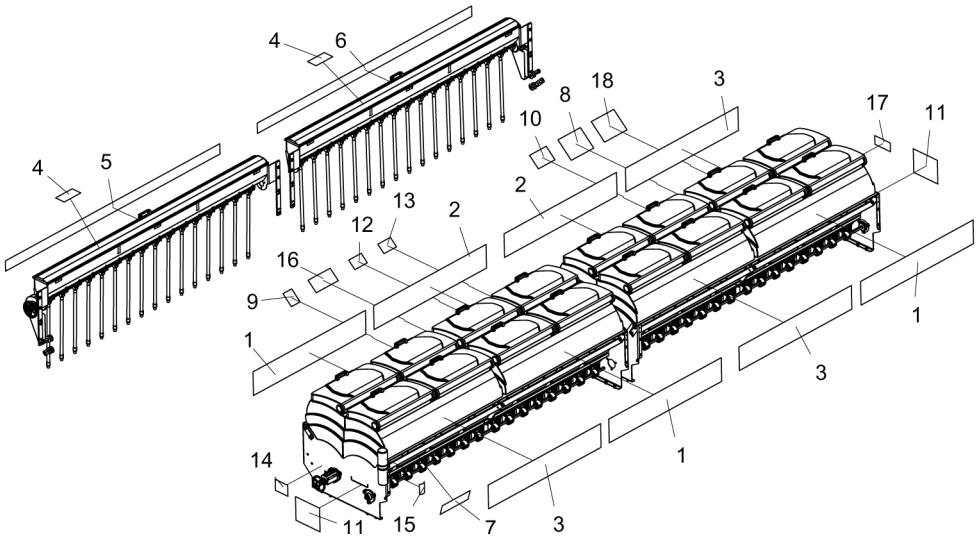

Item	Code	Product description	All	Without Pasture Seed Box	With Pasture Seed Box
1	6020071655-0	Sticker Baldan (230 X 1350Mm)		3	2
2	6020071721-2	Sticker 7000 (230 X 1350Mm)		2	
3	6020071662-3	Sticker Spde-A Plastic Box (230 X 1350Mm)		3	2
4	5206010163-9	Sticker Psture Seed Distribuition Table (100 X 200Mm)			1
5	6020080428-0	Sticker Baldan Pasture Seed Hopper (100 X 2574Mm)			1
6	6020080420-4	Sticker Spde-A Speed Box 7000 "Pasture Seed Hopper" (100 X 2574Mm)			1
7	6020071650-0	Sticker Seed Distribution Table Spdea (100 X 335Mm)	1		
8	6020071653-4	Sticker Fertilizer Distribution Table Spdea 31/20 Teeth Spring Pace 1" (205	1		
9	5206010278-3	Sticker For Cleaning The Fertilizer Hopper (105 X 130Mm)	1		
10	5206010304-6	Sticker Change Of Oil For Speed Box(135 X 200Mm)	1		
11	6020070790-0	Sticker Logotype Baldan (230 X 280Mm)	1		
12	5206010310-0	Sticker Disc Warning (150 X 95Mm)	1		
13	5206010308-9	Sticker Hydraulic Hoses Warning(150 X 95Mm)	1		
14	5206010309-7	Sticker Platform Warning (107 X 145Mm)	1		
15	5206010221-0	Sticker Instruction Manual Warning (100 X 160Mm)	1		
16	5206010285-6	Sticker Speed Box Transmission System (125 X 265Mm)	1		
17	5206010311-9	Sticker Row Marker Warning (180 X 100Mm)	1		
18	6020071652-6	Sticker Fertilizer Distribution Table Spdea 20/31 Teeth Spring Pace 1" (205	1		

Item 1

Item 2

Item 3

Item 4

Items 5 and 6

Item 7

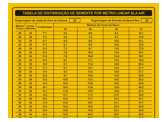
Item 8

Item 9

Item 10

Item 11

Item 12

Item 13

Item 14

Item 15

Item 16

Item 17

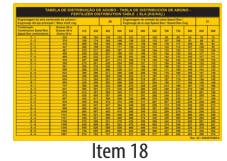
Item 18

• Stickers - Lateral Transport

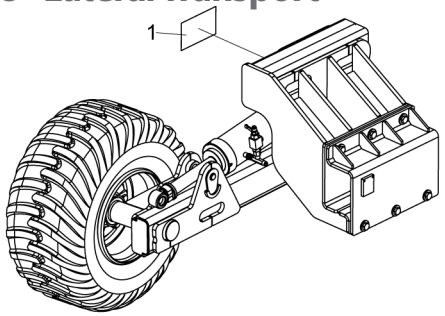

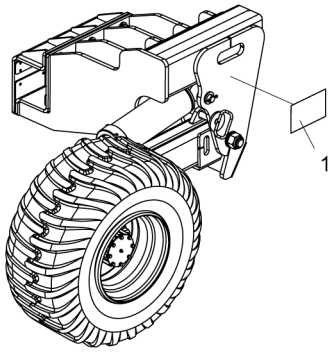

Item	Code	Product description	All
1	6020071775-1	Sticker Warning Of Machine Handling Spde-A 7000 (130 X 210Mm)	2

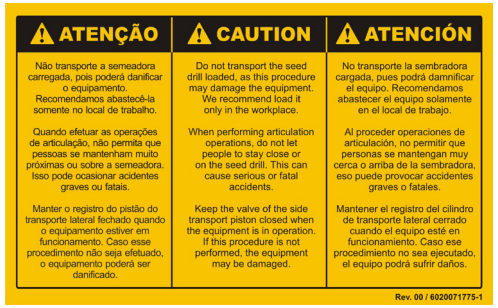

ATENÇÃO

Não transporte a semeadora carregada, pois poderá danificar o equipamento. Recomendamos abastecê-la somente no local de trabalho.

Quando efetuar as operações de articulação, não permita que pessoas se mantenham muito próximas ou sobre a semeadora. Isso pode ocasionar acidentes graves ou fatais.

Manter o registro do pistão do transporte lateral fechado quando o equipamento estiver em funcionamento. Caso esse procedimento não seja efetuado, o equipamento poderá ser danificado.

CAUTION

Do not transport the seed drill loaded, as this procedure may damage the equipment. We recommend load it only in the workplace.

When performing articulation operations, do not let people to stay close or on the seed drill. This can cause serious or fatal accidents.

Keep the valve of the side transport piston closed when the equipment is in operation. If this procedure is not performed, the equipment may be damaged.

ATENCIÓN

No transporte la sembradora cargada, pues podrá damnificar el equipo. Recomendamos abastecer el equipo solamente en el local de trabajo.

Al proceder operaciones de articulación, no permitir que personas se mantengan muy cerca o arriba de la sembradora, eso puede provocar accidentes graves o fatales.

Mantener el registro del cilindro de transporte lateral cerrado cuando el equipo esté en funcionamiento. Caso ese procedimiento no sea ejecutado, el equipo podrá sufrir daños.

Rev. 00 / 6020071775-1

BALDAN

Avenida Baldan, 1500
Nova Matão
15.993-900
Matão/SP - Brasil
sac@baldan.com.br
export@baldan.com.br

+55 16 3221 6500
baldan.com.br