Parts Catalog

PLB DIRECTA

Baldan Line Seeder

BALDAN

Index

PLB DIRECTA *4*
Table PLB *5*
Complete Row Planter *6*
Row Planter W/ Iron Wheel Without Fertilizer Box *7*
Row Planter W/ Iron Wheel W/ Fertilizer Box *7*
Row Planter W/ Rubber Wheel Without Fertilizer Box - Optional *8*
Row Planter W/ Rubber Wheel W/ Fertilizer Box - Optional *8*
Row Planter W/ Compactation Wheel Without Fertilizer Box *9*
Table Row Planter W/ Compactation Wheel Without Fertilizer Box *10*
Row Planter W/ Compactation Wheel W/ Fertilizer Box *11*
Table Row Planter W/ Compactation Wheel W/ Fertilizer Box *12*
Complete Fertilizer Box With Support *13*
Complete Rubber Compactation Wheel - Optional *14*
Seed Box *15*
Complete Cover Disc *16*
Complete Depth Wheel *16*
Double Disc Fertilizer *17*
Double Disc Seed *18*
Cutting Disc *19*
Furrower W/ Complete Support *20*
Support W/Point *20*
Distributor Disc *21*
Peanut Seed Kit *22*
Sprockets *22*
Stickers *23*
NUMERICAL INDEX **24-25**

BALDAN

• PLB DIRECTA

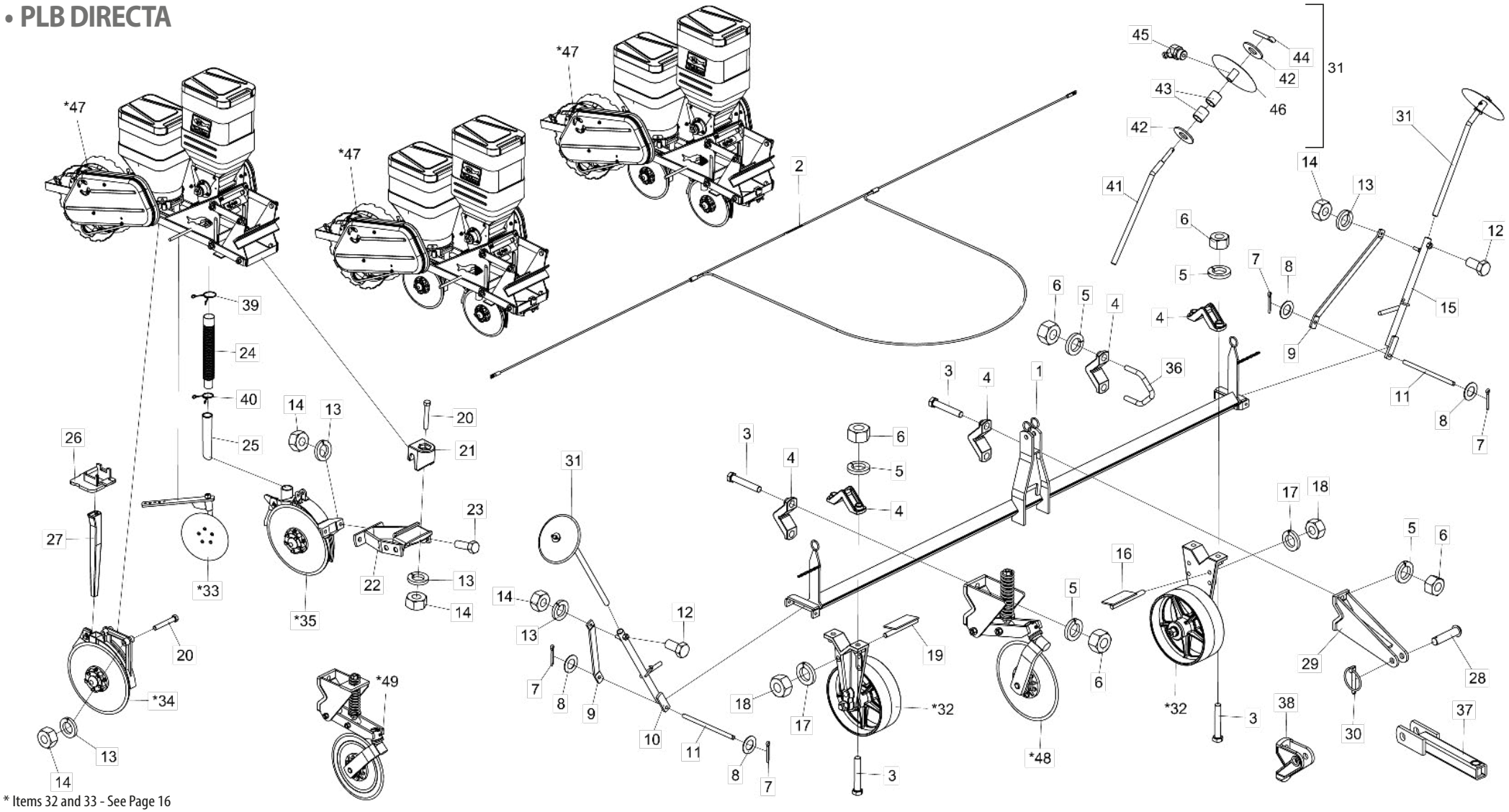

* Items 32 and 33 - See Page 16
* Item 34 - See Page 18
* Item 35 - See Page 17
* Item 47 - See Page 7
* Items 48 and 49 - See Page 19

Note: The quantities were based on PLB 3 Lines/ Illustrative images

• Table PLB

Item	Code	Product description	All	PLB 2 Lines	PLB 3 Lines	PLB 4 Lines	PLB 5 Lines	PLB 6 Lines
1	5084050007-9	Tool Bar Of 1800Mm		1	1			
1	5084010022-4	Tool Bar Of 2300Mm		1	1			
1	5084050008-7	Tool Bar Of 2800Mm		1	1	1	1	1
1	5084010023-2	Tool Bar Of 3300Mm			1	1		
1	5084050009-5	Tool Bar Of 3800Mm				1	1	1
1	5084010105-0	Tool Bar Of 4396Mm				1	1	1
2	6020058441-7	Complete Hope For Drawbar 1800Mm		1	1			
2	6020058438-7	Complete Hope For Drawbar 2300Mm		1	1			
2	6020058442-5	Complete Hope For Drawbar 2800Mm		1	1	1	1	1
2	6020058443-3	Complete Hope For Drawbar 3300Mm			1	1		
2	6020058439-5	Complete Hope For Drawbar 3800Mm				1	1	1
2	6020058440-9	Complete Hope For Drawbar 4400Mm				1	1	1
3	6020310352-5	Hexagonal Head Bolt M20 X 2,50 X 110Mm Cl8.8 Rp	10					
4	6010600770-8	Clamp	7					
5	6020010403-2	Pressure Washer M20 Media	10					
6	6020310770-9	Hexagonal Nut 3/4" 10F Unc Gr5 Ch.1.7/32" Height 18,50Mm	14					
7	6020050101-5	Cotterpin 1/8" X 1"	4					
8	5024010059-0	Smooth Washer Ø16,5 X Ø29 X 1,21Mm	4					
9	5136120010-5	Lateral Plate Of Row Marker	2					
10	5436012318-1	Right Support Of Row Marker	1					
11	5432010024-3	Pin Of Ø5/8" X 275Mm	2					
12	6020310279-0	Hexagonal Head Bolt M16 X 2,00 X 40Mm Cl8.8 Rt Wth Point	2					
13	6020010395-8	Pressure Washer M12 Media	17					
14	6020310820-9	Hexagonal Nut M12 X 1,75 Ma Cl8 Ch.19Mm H.10,00Mm	17					
15	5436012319-0	Left Support Of Row Marker	1					
16	5352010072-1	Left Scraper Of Wheel	1					
17	6020010124-6	Pressure Washer M16 Media	2					
18	6020310818-7	Hexagonal Nut M16 X 2,00 Ma Cl8 Ch.24Mm H.13,00Mm	2					
19	5352010071-3	Right Scraper Of Wheel	1					
20	6020317495-3	Hexagonal Head Bolt M12 X 1,75 X 90Mm Cl8.8 Rp	9					
21	6010600896-8	Hitch Lock Of Discs Support	3					
22	5530180062-1	Support Of Front Double Disc	3					
23	6020310152-2	Hexagonal Head Bolt M12 X 1,75 X 40Mm Cl8.8 Rp	6					
24	6020250111-0	Rubber Tube Ø38 X Ø50,8 X 400Mm	3					
25	6020250048-2	Fertilizer Funnel (2448) C/Recorte 205Mm	3					
26	6010601101-2	Plastic Nozzle Support	3					
27	6020030123-7	Square Funnel 385Mm	3					
28	5432120108-6	French Head Pin Ø28 X 105Mm	2					
29	5252010040-7	Tool Bar Hitch	2					

Item	Code	Product description	All	PLB 2 Lines	PLB 3 Lines	PLB 4 Lines	PLB 5 Lines	PLB 6 Lines
30	6020390293-2	Lock Ø5,75 X 40Mm	2					
31	5386010001-7	Row Marker	2					
*32	5498010272-9	Depth Wheel	2					
*33	5220040001-1	Cover Disc	3					
*34	5124030118-4	Double Disc For Seed (Conv.) Ø13" X 2,65Mm	3					
*35	5124030110-9	Double Disc	3					
36	5068060004-7	Clamp R3/4" Unc	3					
37	5272010015-0	Extension Of Cutting Disc	2					
38	6010601041-5	Tool Bar Hitch	2					
39	6020250339-2	Lock Spring	6					
40	6020250322-8	Lock Spring	6					
41	5232020035-0	Row Marker Shaft	2					
42	5024010142-1	Smooth Washer Ø20,3 X Ø46,5 X 3,00Mm	4					
43	5080020830-8	Bushing Of Ø19,2 X Ø23,2 X 25,50Mm	4					
44	6020050113-9	Cotterpin 1/4" X 1.1/4"	2					
45	6020130110-9	Grease Fitting 1/8"	2					
46	5220040003-8	Complete Row Marker Disc	2					
*47	5124010521-0	Row Planter With Iron Compactation Wheel - Conv. Planting Without Fertilizer Box	-					
*47	5124010593-8	Row Planter With Iron Compactation Wheel - No Till Planting Without Fertilizer Box	-					
*47	5124010523-7	Row Planter With Iron Compactation Wheel - Conventional Planting	-					
*47	5124010527-0	Row Planter With Iron Compactation Wheel - No Till Planting	-					
*47	5124010520-2	Row Planter With Rubber Compactation Wheel - Conv. Planting Without Fertilizer Box	-					
*47	5124010522-9	Row Planter With Rubber Compactation Wheel - Conventional Planting	-					
*47	5124010526-1	Row Planter With Rubber Compactation Wheel - No Till Planter	-					
		Optional						
*48	5124010022-7	Complete Cutting Disc (14"X4Mm Plain)	3					
*49	5124010318-8	Complete Cutting Disc (14"X4Mm Rippled Plain Disc Blade)	3					

BALDAN

• Row Planter

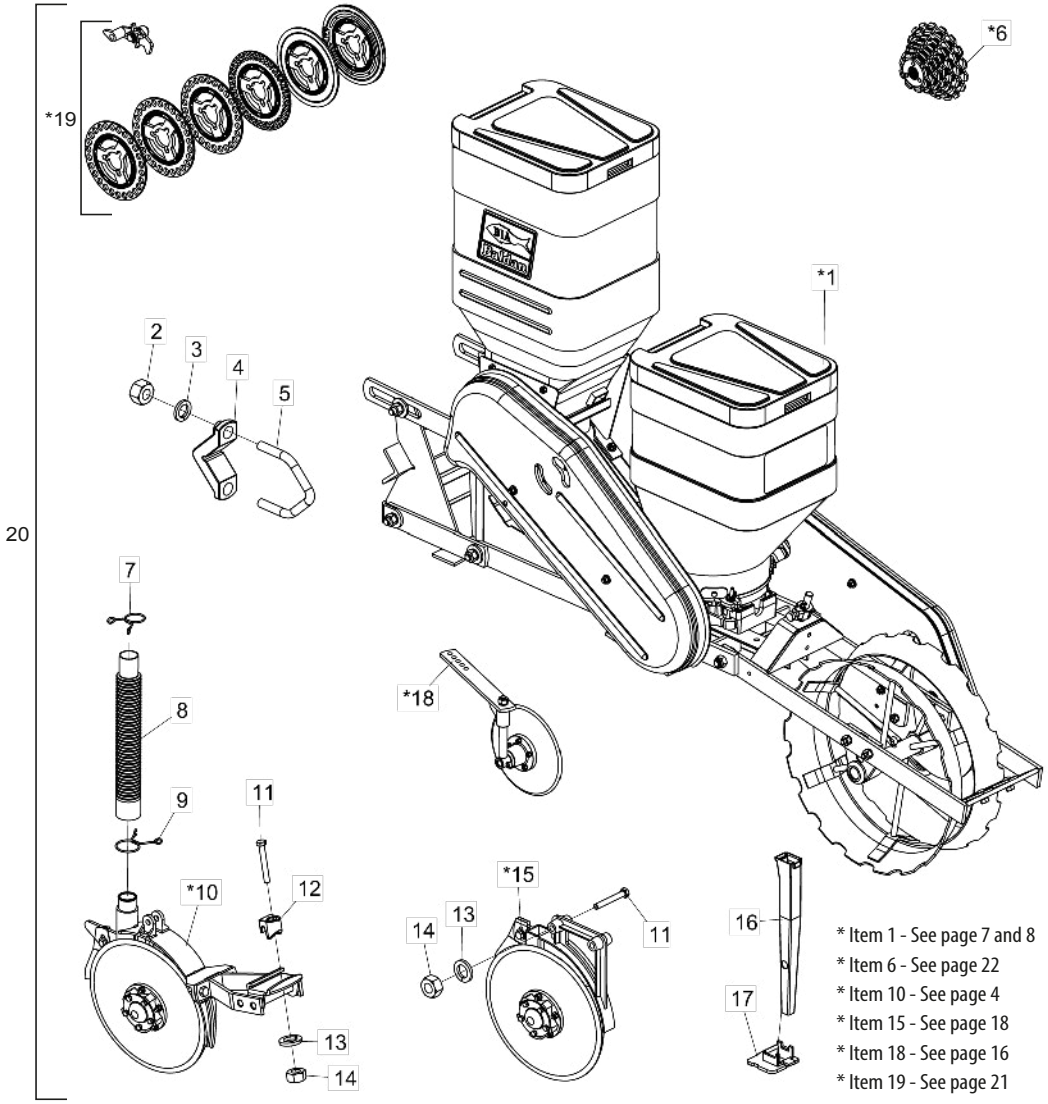

Item	Code	Product description	All	Iron for Conventional Planting	Rubber for Conventional Planting	Iron for Direct Planter	Rubber for Direct Planter	Iron for conv. Planter Without Fertilizer Hopper	Rubber for conv. Planter Without Fertilizer Hopper
*1	5124010523-7	Complete Row Planter With Iron Compactation Wheel - Conventional Planting		1					
*1	5124010522-9	Complete Row Planter With Rubber Compactation Wheel - Conventional Planting			1				
*1	5124010527-0	Complete Row Planter With Iron Compactation Wheel - No Till Planting				1			
*1	5124010526-1	Complete Row Planter With Rubber Compactation Wheel - No Till Planter					1		
*1	5124010521-0	Complete Row Planter W/ Iron Compactation Wheel - Conv. Planting Without Fertilizer Box						1	
*1	5124010520-2	Complete Row Planter W/ Rubber Compactation Wheel - Conv. Planting Without Fertilizer Box							1
2	6020310770-9	Hexagonal Nut 3/4" 10F Unc Gr5 Ch.1.7/32" Height 18,50Mm	4						
3	6020010414-8	Pressure Washer 3/4" Media Industry	4						
4	6010600770-8	Clamp	2						
5	5068060004-7	Clamp R3/4" Unc	2						
*6	5528010592-8	Sprockets For Plb		1	1	1	1		
*6	5528010442-5	Sprockets For Plb (Without Fertilizer)						1	1
7	6020250322-8	Lock Spring		1	1	1	1		
8	6020250111-0	Rubber Tube Ø38 X Ø50,8 X 400Mm (Hose 110)		1	1	1	1		
9	6020250339-2	Lock Spring		1	1	1	1		
*10	5124030111-7	Front Row Planter W/ Double Disc For Fertilizer		1	1	1	1		
11	6020317495-3	Hexagonal Head Bolt M12 X 1,75 X 90Mm Cl8.8 Rp		3	3	3	3	2	2
12	6010600896-8	Hitch Lock Of Discs Support		1	1	1	1		
13	6020010395-8	Pressure Washer M12 Media		3	3	3	3	2	2
14	6020310820-9	Hexagonal Nut M12 X 1,75 Ma Cl8 Ch.19Mm H.10,00Mm		3	3	3	3	2	2
*15	5124030118-4	Row Planter W/ Double Disc For Seed (Convex) Ø13" X 2,65Mm	1						
16	6020030123-7	Square Funnel 385Mm	1						
17	6010601101-2	Plastic Support	1						
*18	5220040001-1	Complete Cover Disc	1						
*19	5528010443-3	Seed Discs For Plb	1						
20	2517010743-0	Complete Row Unit W/Iron Wheel Compactation Conventional Planting		1					
20	2517010741-4	Complete Row Unit W/Rubber Compactation Wheel For Conventional Planting			1				
20	2517010742-2	Complete Row Unit W/Iron Wheel Compactation No Till				1			
20	2517010740-6	Complete Row Unit W/ Compactor Rubber Wheel For No Till					1		
20	2517010744-9	Complete Row Unit W/ Compactation Iron Wheel For Conv. Planting (Without Hopper)						1	
20	2517010745-7	Complete Row Unit W/ Compactation Rubber Wheel For Conventional Planting							1

• Row Planter W/ Iron Wheel Without Fertilizer Box

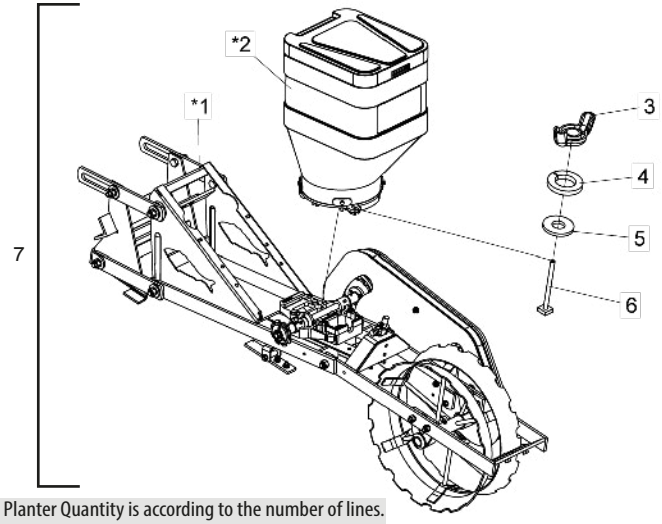

Item 7 - The Row Planter Quantity is according to the number of lines.

* Item 1 - See page 9
* Item 2 - See page 15

Item	Code	Product description	All
*1	5124100019-6	Row Planter W/ Iron Compactation Wheel For Conventional Planter Without Fertilizer Box	1
*2	5092010341-0	Seed Hopper 45Lt Complete(Red Ral 3020) Baldan System	1
3	6020310819-5	Nut M8 X 1,25	1
4	6020010004-5	Pressure Washer M8 Media	1
5	5024010073-5	Smooth Washer Ø8,5 X Ø20 X 2,00Mm	1
6	5420010102-5	Bolt M8 X 97Mm	1
7	5124010521-0	Complete Row Planter With Iron Compactation Wheel - Conventional Planting Without Fertilizer Box	-
7	5124010593-8	Complete Row Planter With Iron Compactation Wheel - Right Planting Without Fertilizer Box	-

• Row Planter W/ Iron Wheel W/ Fertilizer Box

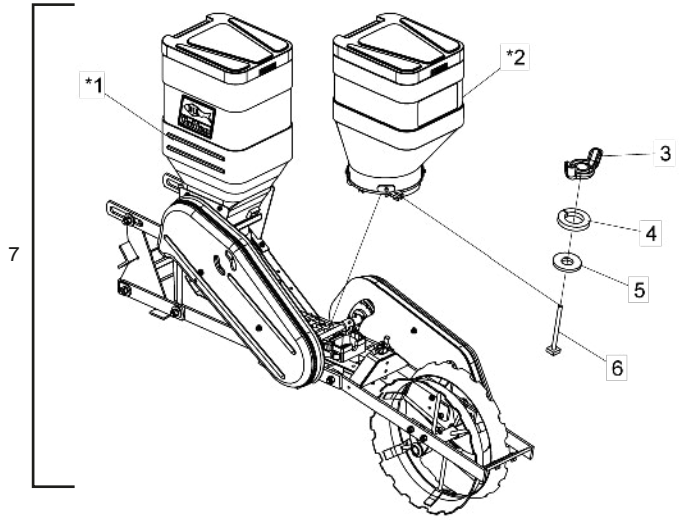

Item 7 - The Row Planter Quantity is according to the number of lines.

* Item 1 - See page 11
* Item 2 - See page 15

Item	Code	Product description	All
*1	5124010525-3	Row Planter W/Iron Compactation Wheel For Conventional Planting	1
*2	5092010341-0	Seed Hopper 45Lt Complete(Red Ral 3020) Baldan System	1
3	6020310819-5	Nut M8 X 1,25	1
4	6020010004-5	Pressure Washer M8 Media	1
5	5024010073-5	Smooth Washer Ø8,5 X Ø20 X 2,00Mm	1
6	5420010102-5	Bolt M8 X 97Mm(Cab.Soldada)	1
7	5124010523-7	Complete Row Planter With Iron Compactation Wheel - Conventional Planting	-
7	5124010527-0	Complete Row Planter With Iron Compactation Wheel - No Till	-

• Row Planter W/ Rubber Wheel Without Fertilizer Box - Optional

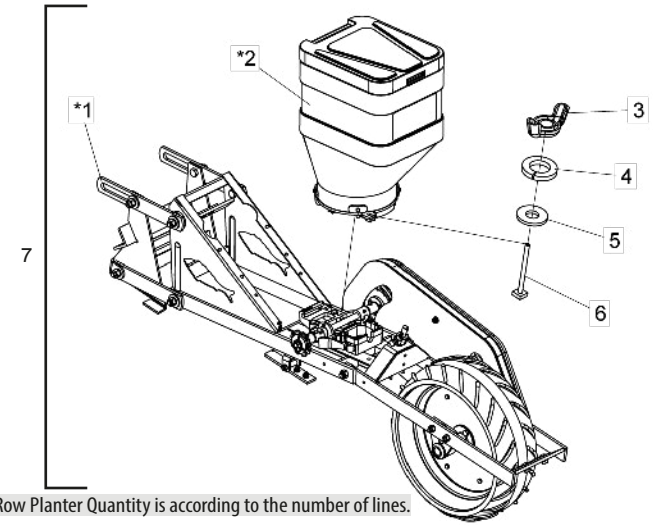

Item 7 - The Row Planter Quantity is according to the number of lines.

* Item 1 -See page 9
* Item 2 - See page 15

Item	Code	Product description	All
*1	5124100021-8	Row Planter W/ Rubber Compactation Wheel For Conventional Planter Without Fertilizer Hopper	1
*2	5092010341-0	Seed Hopper 45Lt Complete(Red Ral 3020) Baldan System	1
6	5420010102-5	Bolt M8 X 97Mm	1
3	6020310819-5	Nut M8 X 1,25	1
4	6020010004-5	Pressure Washer M8 Media	1
5	5024010073-5	Smooth Washer Ø8,5 X Ø20 X 2,00Mm	1
7	5124010520-2	Complete Row Planter With Rubber Compactation Wheel - Conventional Planting Without Fertilizer Box	-

• Row Planter W/ Rubber Wheel W/ Fertilizer Box - Optional

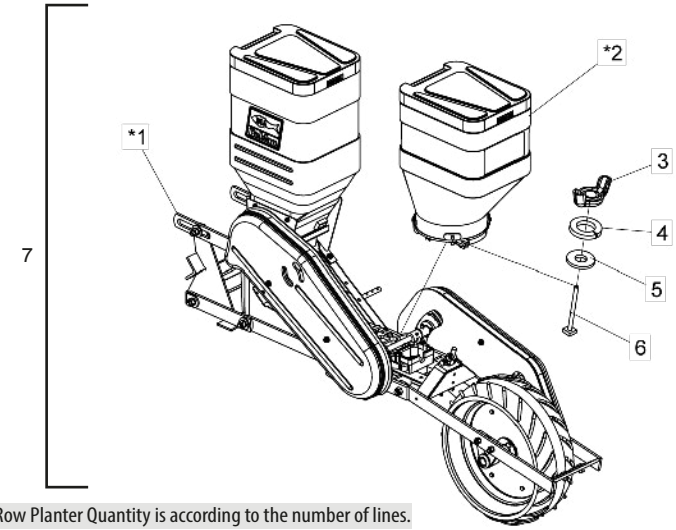

Item 7 - The Row Planter Quantity is according to the number of lines.

* Item 1 - See page 11
* Item 2 - See page 15

Item	Code	Product description	All
*1	5124010524-5	Cart W/ Rubber Compactation Wheel For Conventional Planter	1
*2	5092010341-0	Seed Hopper 45Lt Complete(Red Ral 3020) Baldan System	1
3	6020310819-5	Nut M8 X 1,25	1
4	6020010004-5	Pressure Washer M8 Media	1
5	5024010073-5	Smooth Washer Ø8,5 X Ø20 X 2,00Mm	1
6	5420010102-5	Parafuso Cab.Quadrada M8 X 97Mm(Cab.Soldada)	1
7	5124010522-9	Complete Cart With Rubber Compactation Wheel - Conventional Planting	-
7	5124010526-1	Complete Cart With Rubber Compactation Wheel - No Till Planter	-

• Row Planter W/ Compactation Wheel Without Fertilizer Box

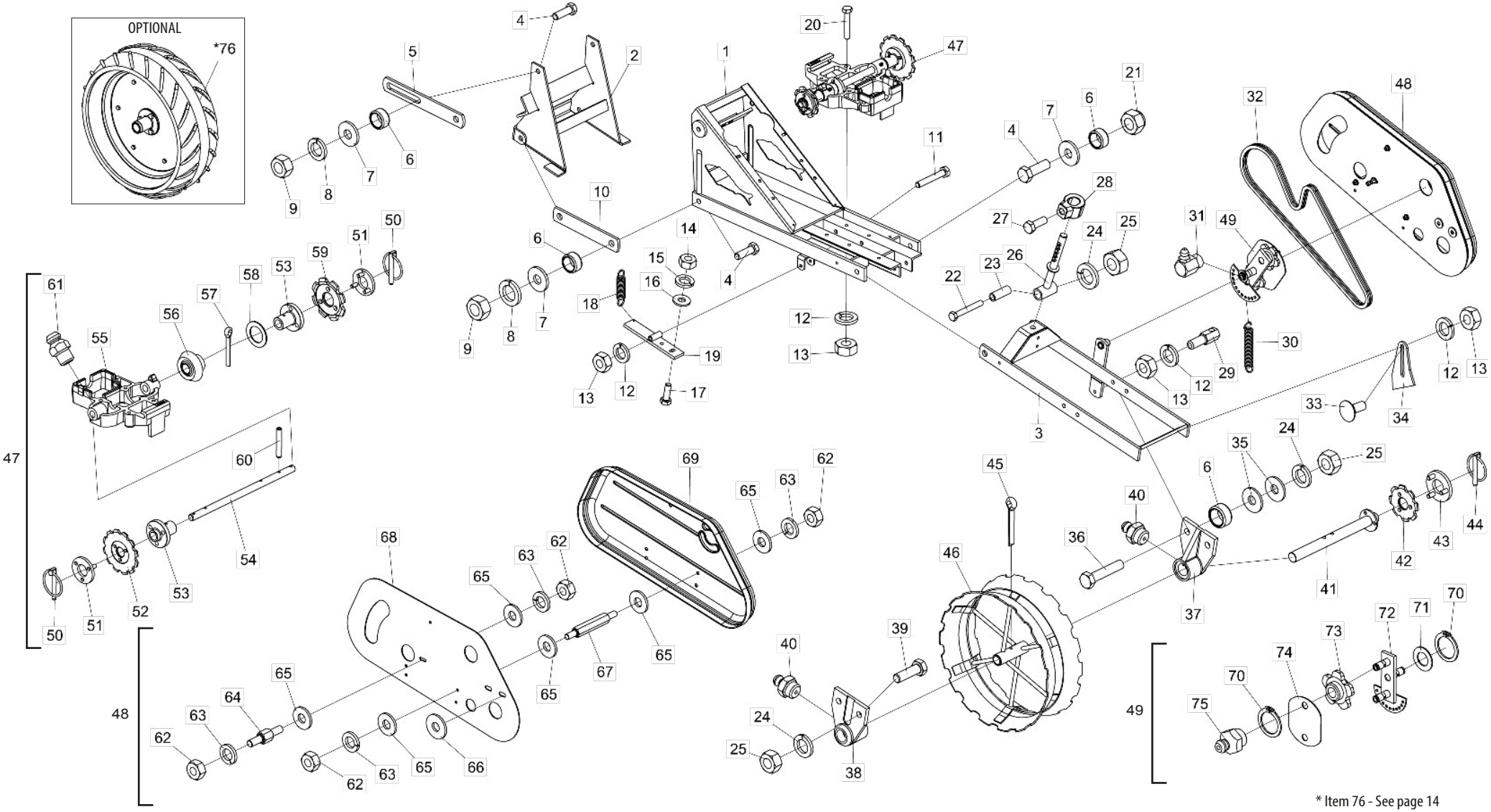

* Item 76 - See page 14
Seed Box - See page 15

BALDAN

• Table Row Planter W/ Compactation Wheel Without Fertilizer Box

Item	Code	Product description	All
1	5404010083-3	Spare Row Planter	1
2	5530220022-9	Support Of Row Planter	1
3	5530240033-3	Compactation Wheel Support	1
4	6020311210-9	Hexagonal Head Bolt M16 X 2,00 X 50Mm Cl8.8 Rt	10
5	5136020017-9	Articulation Upper Plate Support	2
6	5080020009-9	Bushing Of Ø21/32" X Ø7/8" X 11,3Mm	12
7	5024010298-3	Smooth Washer Ø17 X Ø44 X 4,75Mm(Galvanized)	8
8	6020010124-6	Pressure Washer M16 Media	8
9	6020310818-7	Hexagonal Nut M16 X 2,00 Ma Cl8 Ch.24Mm H.13,00Mm	8
10	5040120738-1	Articulation Support	2
11	6020310567-6	Hexagonal Head Bolt M10 X 1,50 X 65Mm Cl8.8 Rp	1
12	6020010394-0	Pressure Washer M10 Media	8
13	6020310822-5	Hexagonal Nut M10 X 1,50 Ma Cl8 Ch.17Mm H.8,00Mm	8
14	6020310454-8	Hexagonal Nut M8 X 1,25 Ma Cl8 Ch.13Mm H.6,50Mm	2
15	6020010004-5	Pressure Washer M8 Media	2
16	5024010073-5	Smooth Washer Ø8,5 X Ø20 X 2,00Mm	2
17	6020310448-3	Hexagonal Head Bolt M8 X 1,25 X 25Mm Cl8.8 Rt	2
18	6020250254-0	Helical Spring Ø11 X Ø15 X 53Mm	1
19	5530170144-5	Shaft Support	1
20	6020310151-4	Hexagonal Head Bolt M10 X 1,50 X 60Mm Cl8,8 Rt	4
21	6020317443-0	Self-Locking Nut With Nylon M16 X 2,00 Ma Cl8 Ch.24Mm H.16,00Mm	2
22	6020317495-3	Hexagonal Head Bolt M12 X 1,75 X 90Mm Cl8.8 Rp	1
23	5080010134-1	Bushing Of Ø13 X Ø19 X 52Mm	1
24	6020010395-8	Pressure Washer M12 Media	5
25	6020310820-9	Hexagonal Nut M12 X 1,75 Ma Cl8 Ch.19Mm H.10,00Mm	5
26	5566020043-5	Rod Spring	1
27	6020310349-5	Hexagonal Head Bolt M12 X 1,75 X 30Mm Cl8.8 R Wth Point	1
28	5080011663-2	Fixation Support Of Spring Rod	1
29	6020090685-6	Hexagonal Shaft Of Spring With Thread M10	1
30	6020250245-0	Helical Spring Ø14 X Ø19 X 130Mm	1
31	6020130112-5	Grease Fitting 1/8"	1
32	6020050043-4	Chain 2050 Of 51 Links + Amendment	1
33	6020317445-7	French Head Bolt M10 X 1,50 X 25Mm Cl8.8 Rt	2
34	5352010008-0	Wheel Scraper	2
35	5024010068-9	Smooth Washer Ø13,3 X Ø35,5 X 3,00Mm	4
36	6020310210-3	Hexagonal Head Bolt M12 X 1,75 X 60Mm Cl8.8 Rt	2
37	5204050014-6	Small Left Hub Of Compactation Wheel	1
38	5204050013-8	Small Right Hub Of Compactation Wheel	1
39	6020310152-2	Hexagonal Head Bolt M12 X 1,75 X 40Mm Cl8.8 Rp	2

Item	Code	Product description	All
40	6020130108-7	Grease Fitting 1/8"	2
41	5232070080-9	Compactation Wheel Shaft	1
42	5256030006-9	Sprocket 8 Teeth	1
43	5558100005-6	Lock	1
44	6020390293-2	Lock Ø5,75 X 40Mm	1
45	6020050122-8	Cotterpin 3/8" X 2.1/2"	1
46	5498050001-5	Spare Wheel Compactation	1
47	5530260014-6	Complete Support Of Seed Distributor Base	1
48	5464010390-9	Complete Lower Chain Protection	1
49	5268010072-1	Complete Chain Stretcher	1
50	6020390293-2	Lock Ø5,75 X 40Mm	2
51	5558100005-6	Lock	2
52	5256030012-3	Sprocket 12 Teeth	1
53	5204060017-5	Transmission Shaft Hub	2
54	5232020177-2	Transmission Shaft	1
55	5530260015-4	Support Of Seed Distributor Base	1
56	5428020003-7	Pinion Of 15 Teeth	1
57	6020050106-6	Cotterpin 3/16" X 1.1/2"	1
58	5024010160-0	Smooth Washer Ø20 X Ø31 X 1,21Mm	1
59	5256030006-9	Sprocket 8 Teeth	1
60	6020310485-8	Heavy Elastic Pin Ø6 X 36Mm	2
61	6020130100-1	Grease Fitting 1/4"	2
62	6020310454-8	Hexagonal Nut M8 X 1,25 Ma Cl8 Ch.13Mm H.6,50Mm	8
63	6020010004-5	Pressure Washer M8 Media	8
64	5232012008-0	Hexagonal Shaft 1/2" X 15,30Mm	1
65	5024010073-5	Smooth Washer Ø8,5 X Ø20 X 2,00Mm	14
66	5024010068-9	Smooth Washer Ø13,3 X Ø35,5 X 3,00Mm	2
67	5232012005-5	Hexagonal Shaft 1/2" X 62Mm	3
68	5136015446-0	Protection Plate of Lower Chain	1
69	6020055658-8	Small Chain Cap Plb	1
70	6020010252-8	Retention Oring	3
71	5024010059-0	Smooth Washer Ø16,5 X Ø29 X 1,21Mm	1
72	5268010073-0	Chain Stretcher	1
73	6020090502-7	Gear 5012-1	2
74	5136015444-4	Plate Of Stretcher	1
75	6020130108-7	Grease Fitting 1/8"	2
		Optional	
*76	5498070008-1	Complete Rubber Compaction Wheel	1

• Row Planter W/ Compactation Wheel W/ Fertilizer Box

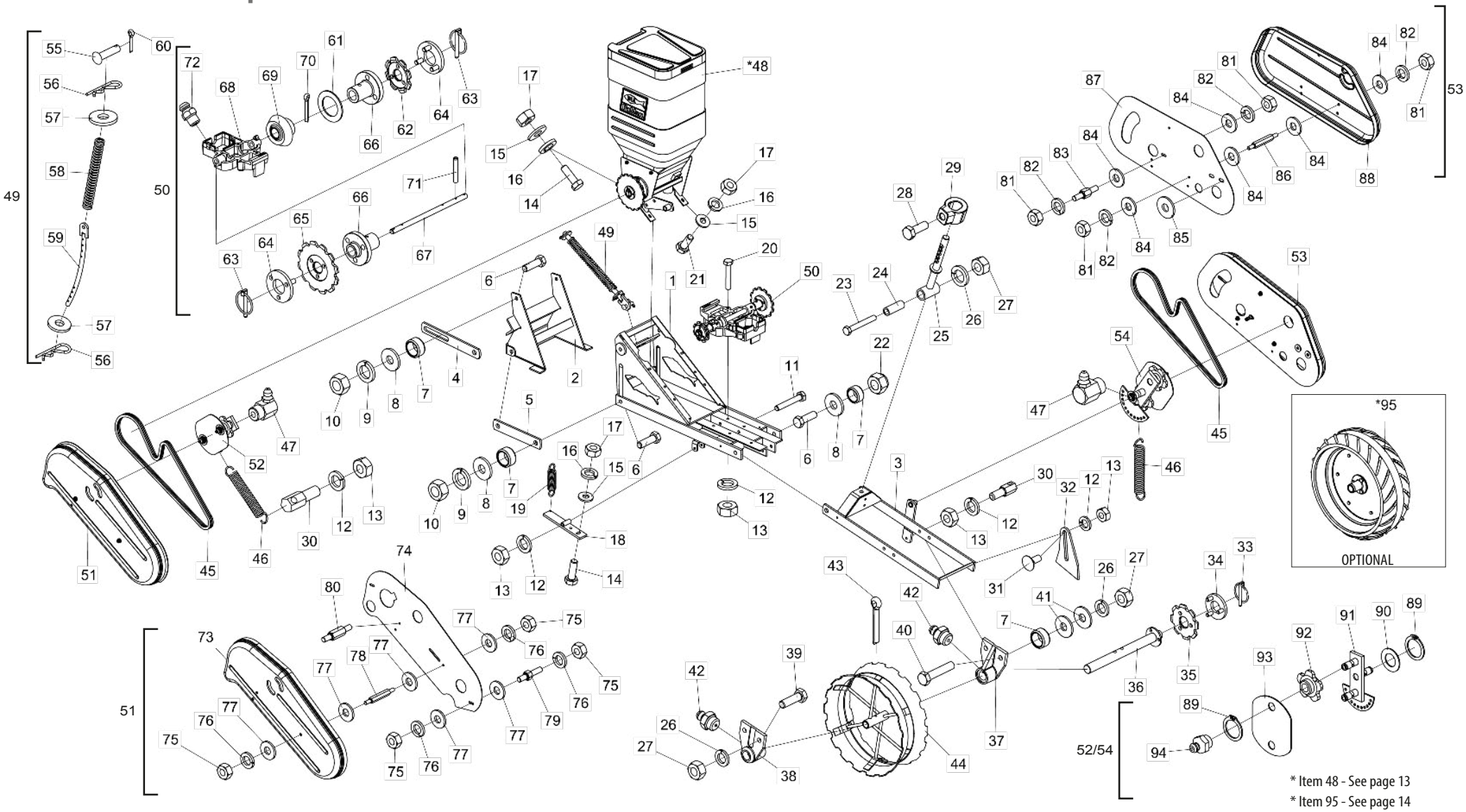

* Item 48 - See page 13
* Item 95 - See page 14
Seed Box - See page 15

BALDAN

• Table Row Planter W/ Compactation Wheel W/ Fertilizer Box

Item	Code	Product description	All
1	5404010083-3	Spare Row Planter	1
2	5530220022-9	Row Planter Support	1
3	5530240033-3	Support Of Compactation Wheel	1
4	5136020017-9	Articulation Upper Plate Support	2
5	5040120738-1	Articulation Lower Bar Support	2
6	6020311210-9	Hexagonal Head Bolt M16 X 2,00 X 50Mm Cl8.8 Rt	10
7	5080020009-9	Bushing Of Ø21/32" X Ø7/8" X 11,3Mm	12
8	5024010298-3	Smooth Washer Ø17 X Ø44 X 4,75Mm(Galvanized)	8
9	6020010124-6	Pressure Washer M16 Media	8
10	6020310818-7	Hexagonal Nut M16 X 2,00 Ma Cl8 Ch.24Mm H.13,00Mm	8
11	6020310567-6	Hexagonal Head Bolt M10 X 1,50 X 65Mm Cl8.8 Rp	1
12	6020010394-0	Pressure Washer M10 Media	9
13	6020310822-5	Hexagonal Nut M10 X 1,50 Ma Cl8 Ch.17Mm H.8,00Mm	9
14	6020310448-3	Hexagonal Head Bolt M8 X 1,25 X 25Mm Cl8.8 Rt	4
15	5024010073-5	Smooth Washer Ø8,5 X Ø20 X 2,00Mm	6
16	6020010004-5	Pressure Washer M8 Media	6
17	6020310454-8	Hexagonal Nut M8 X 1,25 Ma Cl8 Ch.13Mm H.6,50Mm	6
18	5530170144-5	Cover Shaft Support	1
19	6020250254-0	Helical Spring Ø11 X Ø15 X 53Mm	1
20	6020310151-4	Hexagonal Head Bolt M10 X 1,50 X 60Mm Cl8,8 Rt	4
21	6020311269-9	Hexagonal Head Bolt M8 X 1,25 X 20Mm Cl8.8 Rt	2
22	6020317443-0	Self-Locking Nut With Nylon M16 X 2,00 Ma Cl8 Ch.24Mm H.16,00Mm	2
23	6020317495-3	Hexagonal Head Bolt M12 X 1,75 X 90Mm Cl8.8 Rp	1
24	5080010134-1	Bushing Of Ø13 X Ø19 X 52Mm	1
25	5566020043-5	Rod Spring	1
26	6020010395-8	Pressure Washer M12 Media	5
27	6020310820-9	Hexagonal Nut M12 X 1,75 Ma Cl8 Ch.19Mm H.10,00Mm	5
28	6020310349-5	Hexagonal Head Bolt M12 X 1,75 X 30Mm Cl8.8 R Wth Point	1
29	5080011663-2	Fixation Support Of Spring Rod	1
30	6020090685-6	Hexagonal Shaft Of Spring With Thread M10	2
31	6020317445-7	French Head Bolt M10 X 1,50 X 25Mm Cl8.8 Rt	2
32	5352010008-0	Wheel Scraper	2
33	6020390293-2	Lock Ø5,75 X 40Mm	1
34	5558100005-6	Lock	1
35	5256030006-9	Sprocket 8 Teeth	1
36	5232070080-9	Compactation Wheel Shaft	1
37	5204050014-6	Small Left Hub Of Compactation Wheel	1
38	5204050013-8	Small Right Hub Of Compactation Wheel	1
39	6020310152-2	Hexagonal Head Bolt M12 X 1,75 X 40Mm Cl8.8 Rp	2
40	6020310210-3	Hexagonal Head Bolt M12 X 1,75 X 60Mm Cl8.8 Rt	2
41	5024010068-9	Smooth Washer Ø13,3 X Ø35,5 X 3,00Mm	4
42	6020130108-7	Grease Fitting 1/8"	2
43	6020050122-8	Cotterpin 3/8" X 2.1/2"	1
44	5498050001-5	Compactation Wheel	1
45	6020050043-4	Chain 2050 Of 51 Links + Amendment	2
46	6020250245-0	Helical Spring Ø14 X Ø19 X 130Mm Wire=Ø2,5Mm	2
47	6020130112-5	Grease Fitting 1/8"	2
*48	5530012421-5	Complete Support With Fertilizer Box	1
49	5566010065-1	Complete Front Rod Of Spring	1

Item	Code	Product description	All
50	5530260014-6	Complete Support Of Seed Distributor Base	1
51	5464010392-5	Complete Upper Chain Protection	1
52	5268010824-2	Complete Chain Stretcher	1
53	5464010390-9	Complete Lower Chain Protection	1
54	5268010072-1	Complete Chain Stretcher	1
55	6020311237-0	French Head Pin Ø11,2 X 42Mm	1
56	6020390294-0	Lock Nma - Type "R" Ø3,5 X 67Mm(Special)	2
57	5024010298-3	Smooth Washer Ø17 X Ø44 X 4,75Mm(Galvanized)	2
58	6020250286-8	Helical Spring Ø20,5 X Ø30 X 260Mm	1
59	5566040117-1	Front Rod Of Spring	1
60	6020050104-0	Cotterpin 3/16" X 1"	1
61	5024010160-0	Smooth Washer Ø20 X Ø31 X 1,21Mm	1
62	5256030006-9	Sprocket 8 Teeth	1
63	6020390293-2	Lock Ø5,75 X 40Mm	2
64	5558100005-6	Lock	2
65	5256030012-3	Sprocket 12 Teeth	1
66	5204060017-5	Transmission Shaft Hub	2
67	5232020177-2	Transmission Shaft	1
68	5530260015-4	Support Of Seed Distributor Base	1
69	5428020003-7	Pinion Of 15 Teeth	1
70	6020050106-6	Cotterpin 3/16" X 1.1/2"	1
71	6020310485-8	Heavy Elastic Pin Ø6 X 36Mm (Seeger Reno 701.163)	2
72	6020130100-1	Grease Fitting 1/4"	2
73	6020055659-6	Large Chain Cap Plb (Yellow Emergency Sam-Am)	1
74	5136015449-5	Upper Protection Plate	1
75	6020310454-8	Hexagonal Nut M8 X 1,25 Ma Cl8 Ch.13Mm H.6,50Mm	8
76	6020010004-5	Pressure Washer M8 Media	8
77	5024010073-5	Smooth Washer Ø8,5 X Ø20 X 2,00Mm	14
78	5232012005-5	Hexagonal Shaft 1/2" X 62Mm	2
79	5232012006-3	Hexagonal Shaft 1/2" X 9,5Mm	1
80	5232012007-1	Hexagonal Shaft De 1/2" X 29Mm.	1
81	6020310454-8	Hexagonal Nut M8 X 1,25 Ma Cl8 Ch.13Mm H.6,50Mm	8
82	6020010004-5	Pressure Washer M8 Media	8
83	5232012008-0	Hexagonal Shaft 1/2" X 15,30Mm	1
84	5024010073-5	Smooth Washer Ø8,5 X Ø20 X 2,00Mm	14
85	5024010068-9	Smooth Washer Ø13,3 X Ø35,5 X 3,00Mm	2
86	5232012005-5	Hexagonal Shaft 1/2" X 62Mm	3
87	5136015446-0	Protection Plate Of Chain	1
88	6020055658-8	Small Chain Cap Plb	1
89	6020010252-8	Retention Ring E-16 G501-016-01	6
90	5024010059-0	Smooth Washer Ø16,5 X Ø29 X 1,21Mm	4
91	5268010825-0	Chain Stretcher	1
91	5268010073-0	Chain Stretcher	1
92	6020090502-7	Sprocket 5012-1	4
93	5136015444-4	Plate Of Stretcher	2
94	6020130108-7	Grease Fitting 1/8"	4
		Optional	
*95	5498070008-1	Complete Rubber Compaction Wheel	1

• Complete Fertilizer Box

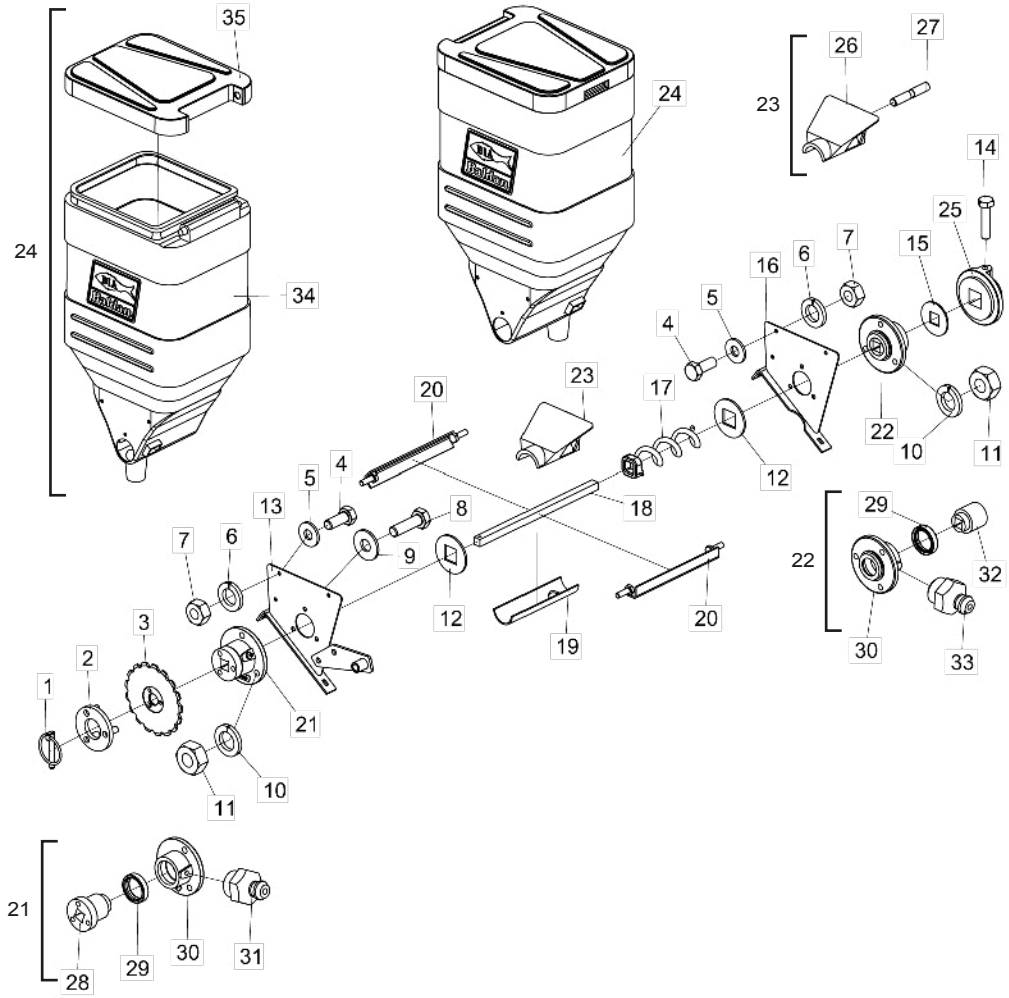

Item	Code	Product description	All
1	6020390293-2	Lock Ø5,75 X 40Mm	1
2	5558100005-6	Lock Of Gear	1
3	5256030018-2	Sprocket 17 Teeth	1
4	6020311269-9	Hexagonal Head Bolt M8 X 1,25 X 20Mm Cl8.8 Rt	4
5	5024010073-5	Smooth Washer Ø8,5 X Ø20 X 2,00Mm	4
6	6020010004-5	Pressure Washer M8 Media	4
7	6020310454-8	Hexagonal Nut M8 X 1,25 Ma Cl8 Ch.13Mm H.6,50Mm	4
8	6020310437-8	Hexagonal Head Bolt M10 X 1,50 X 35Mm Cl8.8 Rt	1
9	5024010075-1	Smooth Washer Ø10,3 X Ø25 X 2,00Mm	1
10	6020010394-0	Pressure Washer M10 Media	6
11	6020310822-5	Hexagonal Nut M10 X 1,50 Ma Cl8 Ch.17Mm H.8,00Mm	6
12	5024010328-9	Stainless Washer 20 X Ø48 X 2,50Mm	2
13	5346020007-1	Left Lateral Support	1
14	6020310560-9	Hexagonal Head Bolt M8 X 1,25 X 35Mm Cl8.8 Rt	1
15	5024070007-4	Smooth Washer Ø20 X Ø56,5 X 3,00Mm	1
16	5346020008-0	Right Left Lateral Support	1
17	5400010106-3	Right Spiral Spring Q21 X 195 X 7,93Mm (Pace 50,80Mm)	1
18	5232060236-0	Shaft Q3/4" X 400Mm	1
19	5106010026-1	Funnel Cover Of 224Mm	1
20	5530016347-4	Supportof Lock Of Box	2
21	5204010109-8	Complete Left Hub	1
22	5204010108-0	Complete Right Hub	1
23	5538014970-1	Complete Fertilizer Dosing Cover	1
24	6020055066-0	Plastic Box For Fertilizer 65 Liters With Cover (Red Ral-3020)	1
25	6020015920-1	Plastic Washer - Square Hole With Dimple	1
26	5538014969-8	Fertilizer Dosing Cover	1
27	6020395063-5	Rod M10 X 58Mm	1
28	5204070032-3	Hub	1
29	6020350255-1	Retainer Ø35,00 X Ø47,00 X 10,00Mm	2
30	5204010110-1	Hub	2
31	6020130108-7	Grease Fitting 1/8"	1
32	6020030088-5	Bushing With Square Hole 3/4" X 48 X 53Mm	1
33	6020130108-7	Grease Fitting 1/8"	1
34	6020055065-2	Plastic Box For Fertilizer 65 Liters Without Cover (Red Ral-3020)	1
35	6020390869-8	Cover Of Fertilizer/Seed Plastic Hopper 65 Liters (Black)	1

• Complete Rubber Compactation Wheel - Optional

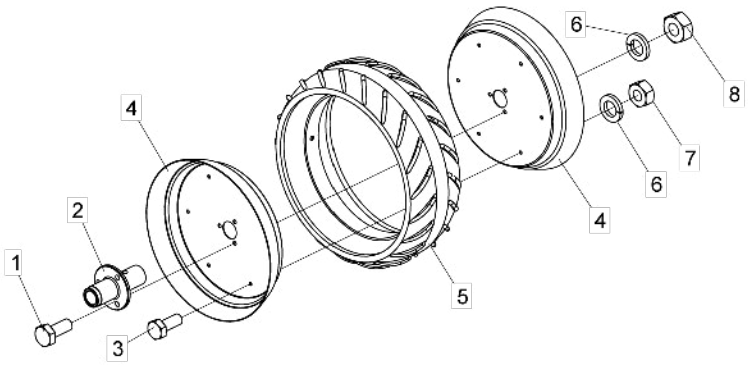

Item	Code	Product description	All
1	6020310452-1	Hexagonal Head Bolt M10 X 1,50 X 25Mm Cl8.8 Rt	3
2	5204010369-4	Wheel Hub	1
3	6020311269-9	Hexagonal Head Bolt M8 X 1,25 X 20Mm Cl8.8 Rt	6
4	5018010015-3	Compactation Wheel Rim	2
5	6020030182-2	Rubber Compactation Wheel	1
6	6020010004-5	Pressure Washer M8 Media	9
7	6020310454-8	Hexagonal Nut M8 X 1,25 Ma Cl8 Ch.13Mm H.6,50Mm	6
8	6020310822-5	Hexagonal Nut M10 X 1,50 Ma Cl8 Ch.17Mm H.8,00Mm	3

• Seed Box

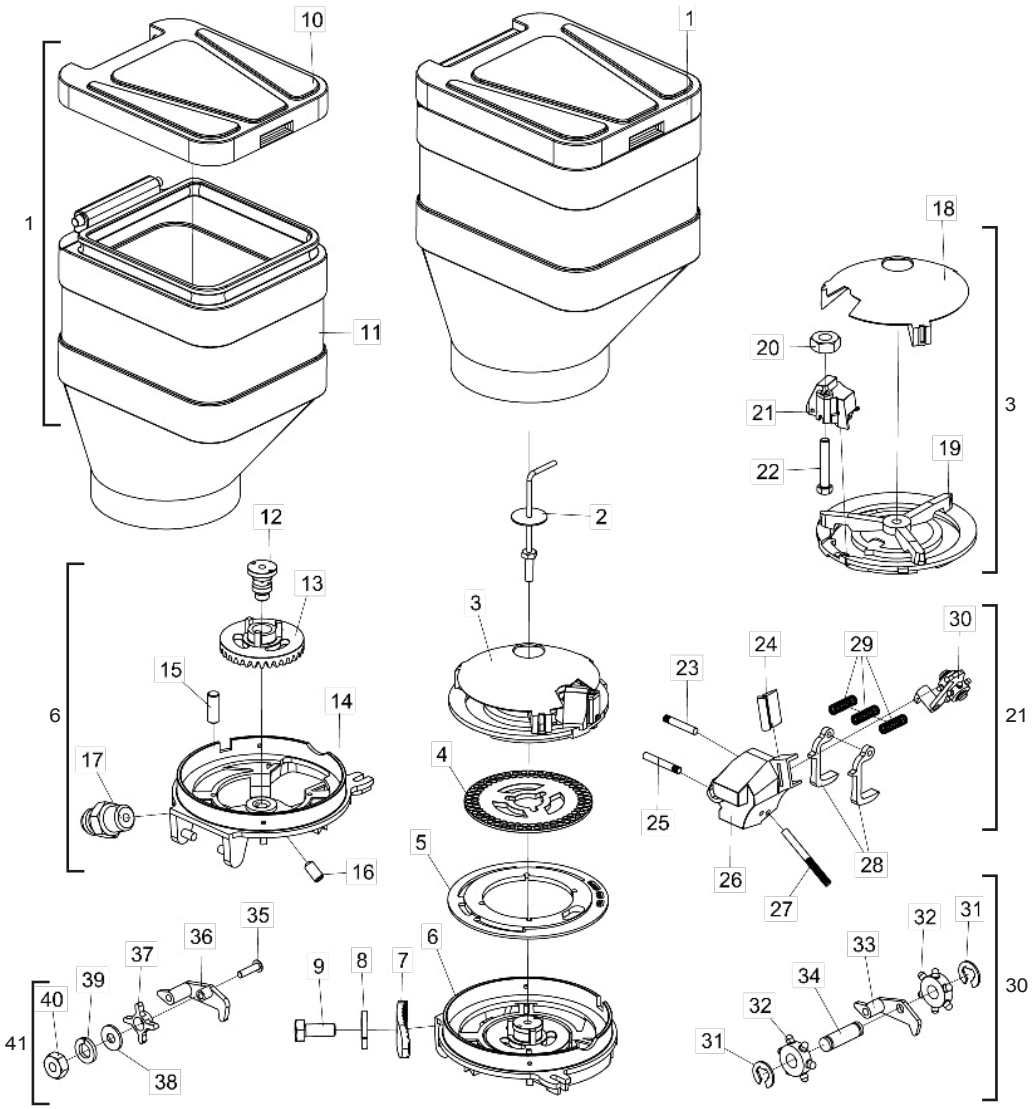

Item	Code	Product description	All
1	6020055068-7	Plastic Box For Seed 45 Liters With Cover	1
2	5420010103-3	Seed Hopper Bolt	1
3	6020370157-0	Complete Upper Support Of Distriutor Disc	1
4	6020070009-3	Soy Deam Distributor Disc 90H Ø8,5Mm (Ø43 X Ø186 X 4,50Mm)	1
5	5220020085-3	Metallic Dual Side Disc (Ø132 X Ø233 X 7,50Mm)	1
6	5044010348-8	Seed Distributor Base	1
7	5530011945-9	Seed Box Fixation Support	4
8	6020010122-0	Pressure Washer	4
9	6020310291-0	Hexagonal Head Bolt M6 X 1,00 X 15Mm Cl8.8 Rt	4
10	6020390869-8	Cover Of Fertilizer/Seed Plastic Hopper 65 Liters (Black)	1
11	6020055067-9	Plastic Box For Seed 45 Liters Without Cover	1
12	5232012000-4	Seed Distributor Shaft	1
13	5164020004-2	Crown Of 33 Teeths	1
14	5044010347-0	Seed Distribuotoor Base	1
15	5432090085-1	Flat Pin Ø6,8 X 18Mm With	2
16	6020310259-6	Allen Bolt S/C M6 X 1,00 X 12Mm Ma Cl12.9 Rt(Phosphatized)	1
17	6020130100-1	Grease Fitting 1/4"	1
18	6020390405-6	Protection Cover Of Seed	1
19	6020370142-2	Upper Support Of Distriutor Disc	1
20	6020310744-0	Hexagonal Nut 5/16" 18F Unc Gr5 Ch.1/2" Height 6,50Mm	1
21	6020050423-5	Complete Seed Distributor Box	1
22	6020311025-4	Hexagonal Head Bolt 5/16" X 2" 18F Unc1A Gr2 Rp	1
23	6020310425-4	Pin Ø5 X 30Mm	1
24	6020310607-9	Rubber Protection	1
25	6020310424-6	Pin Ø5 X 34Mm	1
26	6020050404-9	Seed Distributor Box	1
27	6020310423-8	Pin Ø5 X 52Mm	1
28	6020130207-5	Trigger Seed Cleaner	2
29	6020250328-7	Helical Spring Ø8 X Ø9,7 X 29,5Mm Wire=Ø0,85Mm	3
30	6020130206-7	Trigger Cleaner	1
31	6020010246-3	Retention Ring Rs-05 G503-050-01	2
32	6020350784-7	Seed Batcher Rossete	2
33	6020130205-9	Batcher Trigger	1
34	6020310526-9	Plastic Pin Ø7 X 18.5 X 23.5	1
35	6020310122-0	Bolt 3/16" X 3/4" 24F Unc1A Gr5 Rt	1
36	6020130204-0	Trigger-Support Of Rossete	1
37	6020350876-2	Batcher Rossete With Hole Ø8,3Mm	1
38	5024010423-4	Smooth Washer Ø5,5 X Ø12,7 X 1,21Mm	1
39	6020010400-8	Pressure Washer 3/16" Media Industry	1
40	6020310740-7	Hexagonal Nut 3/16" 24F Unc Gr5 Ch.3/8" Height 4,50Mm	1
41	6020350116-4	Complete Rossete	1

Obs: The Seed Box is composed of all mentioned parts in this lis, but when sold complete the itens 35 until 41 do no go together.

• Complete Cover Disc

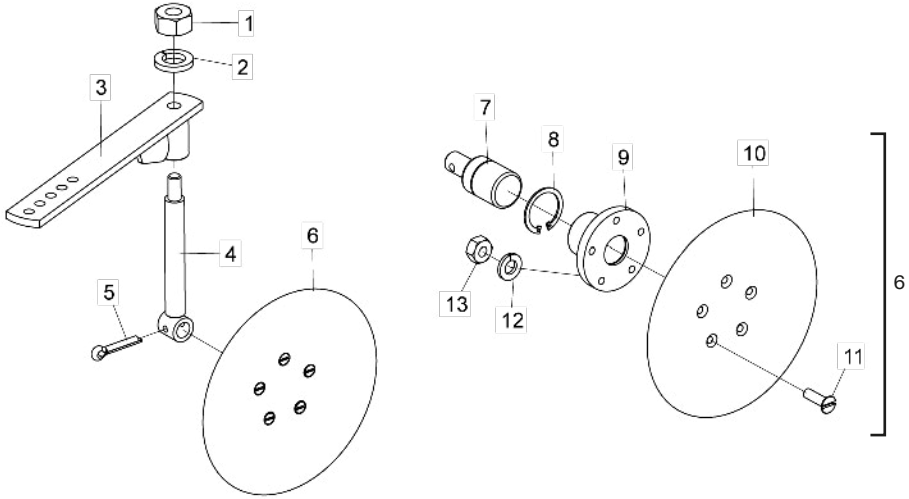

Item	Code	Product description	All
1	6020310820-9	Hexagonal Nut M12 X 1,75 Ma Cl8 Ch.19Mm H.10,00Mm	1
2	6020010395-8	Pressure Washer M12 Media	1
3	5072010004-2	Arm Of Disc	1
4	5232012001-2	Shaft Of Cover Disc	1
5	6020050113-9	Cotterpin 1/4" X 1.1/4"	1
6	5204020013-4	Complete Hub With Cover Disc	1
7	6020350045-1	Bearing F110053-1 With Hole 1/4"	1
8	6020010282-0	Retention Oring I-30 G502-030-01	1
9	5204010022-9	Cover Disc Hub	1
10	2644346501-3	Concave Plain Disc Blade 8.1/2 X 3,00 5H Rd 7Mm R=32,5Mm Single Bevel	1
11	6020310388-6	Simple Slotted Plain Head Bolt (Thread Machined) M6 X 1,00 X 20Mm Cl8.8 Rt	5
12	6020010122-0	Pressure Washer	5
13	6020311257-5	Hexagonal Nut M6 X 1,00 Ma Cl8 Ch.10Mm H.5,00Mm	5

• Complete Depth Wheel

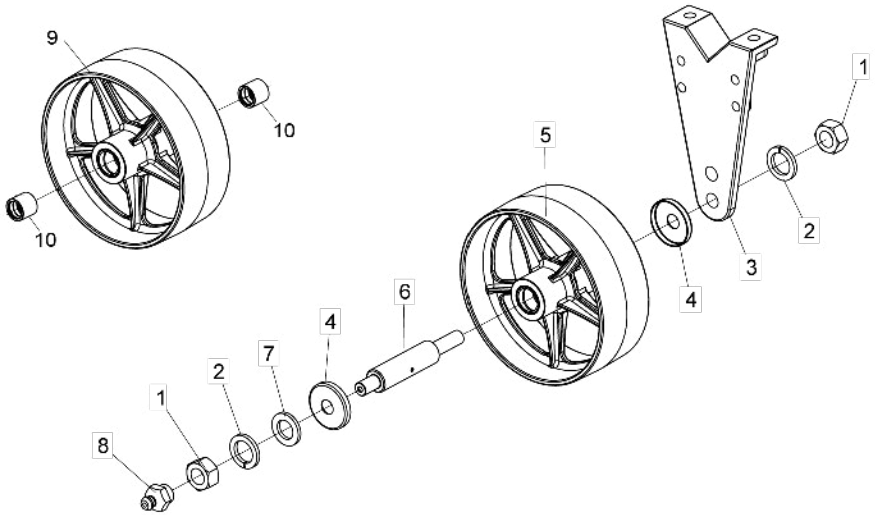

Item	Code	Product description	All
1	6020310457-2	Hexagonal Nut M24 X 3,00 Ma Cl8 Ch.36Mm H.19,00Mm	2
2	6020010196-3	Pressure Washer M24 Media	2
3	5530400013-8	Wheel Support	1
4	5096010011-2	Protective Cap Of Shaft	2
5	5498010260-5	Depth Wheel	1
6	5232011995-2	Depth Wheel Shaft	1
7	5024010039-5	Smooth Washer Ø26,2 X Ø44 X 4,75Mm	1
8	6020130108-7	Grease Fitting 1/8"	1
9	5498010254-0	Deph Wheel	1
10	5080010311-5	Bronze Bushing	2

• Double Disc (Fertilizer)

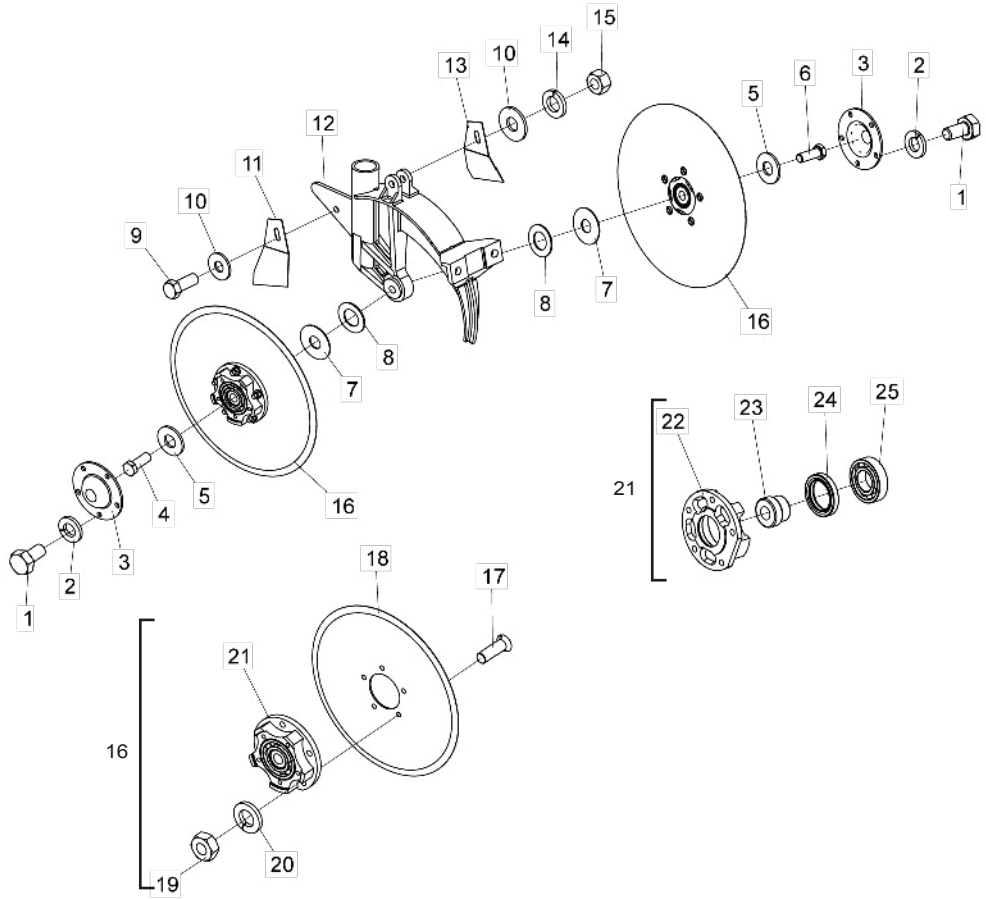

Item	Code	Product description	All
1	6020311000-9	Hexagonal Head Bolt 1/4" X 1/2" 20F Unc1A Gr5 Rt	10
2	6020010402-4	Pressure Washer 1/4" Media Industry	10
3	5096030002-2	Cover Of Double Disc Hub	2
4	6020311074-2	Hexagonal Head Bolt 5/8" X 1.3/4" 11F Unc1A Gr5 Rp	1
5	5024010239-8	Smooth Washer Ø16,5 X Ø37 X 3,00Mm	2
6	6020311073-4	Hexagonal Head Bolt 5/8" X 1.3/4" 11F Unc1A Gr5 Rp	1
7	5024010051-4	Smooth Washer Ø16 X Ø44 X 1,21Mm	2
8	5024010059-0	Smooth Washer Ø16,5 X Ø29 X 1,21Mm	4
9	6020310452-1	Hexagonal Head Bolt M10 X 1,50 X 25Mm Cl8.8 Rt	1
10	5024010075-1	Smooth Washer Ø10,3 X Ø25 X 2,00Mm	2
11	5352030047-0	Right Scraper Of Discs	1
12	5112020017-1	Double Disc Housing	1
13	5352030048-8	Left Scraper Of Discs	1
14	6020010394-0	Pressure Washer M10 Media	1
15	6020310822-5	Hexagonal Nut M10 X 1,50 Ma Cl8 Ch.17Mm H.8,00Mm	1
16	5204010348-1	Complete Hub (Plain Disc Ø13" X 3,00Mm) 5 Holes	2
17	6020310235-9	Plain Head Bolt M8 X 1,25 X 25Mm Cl8.8 Rt	10
18	2853346539-2	Coulter Plain Disc Blade 13 X 3,00 Hc Rd 68,6Mm + 5H Rd 8,8Mm R=47,5Mm Single Bevel	2
19	6020310454-8	Hexagonal Nut M8 X 1,25 Ma Cl8 Ch.13Mm H.6,50Mm	10
20	6020010004-5	Pressure Washer M8 Media	10
21	5204020094-0	Assembled Hub	2
22	5204020026-6	Double Disc Hub (Spare)	2
23	5080010042-6	Bushing	2
24	6020350259-4	Retainer Ø35,00 X Ø50,00 X 8,00Mm	2
25	6020350020-6	Bearing 6206	2

• Double Disc (Seed)

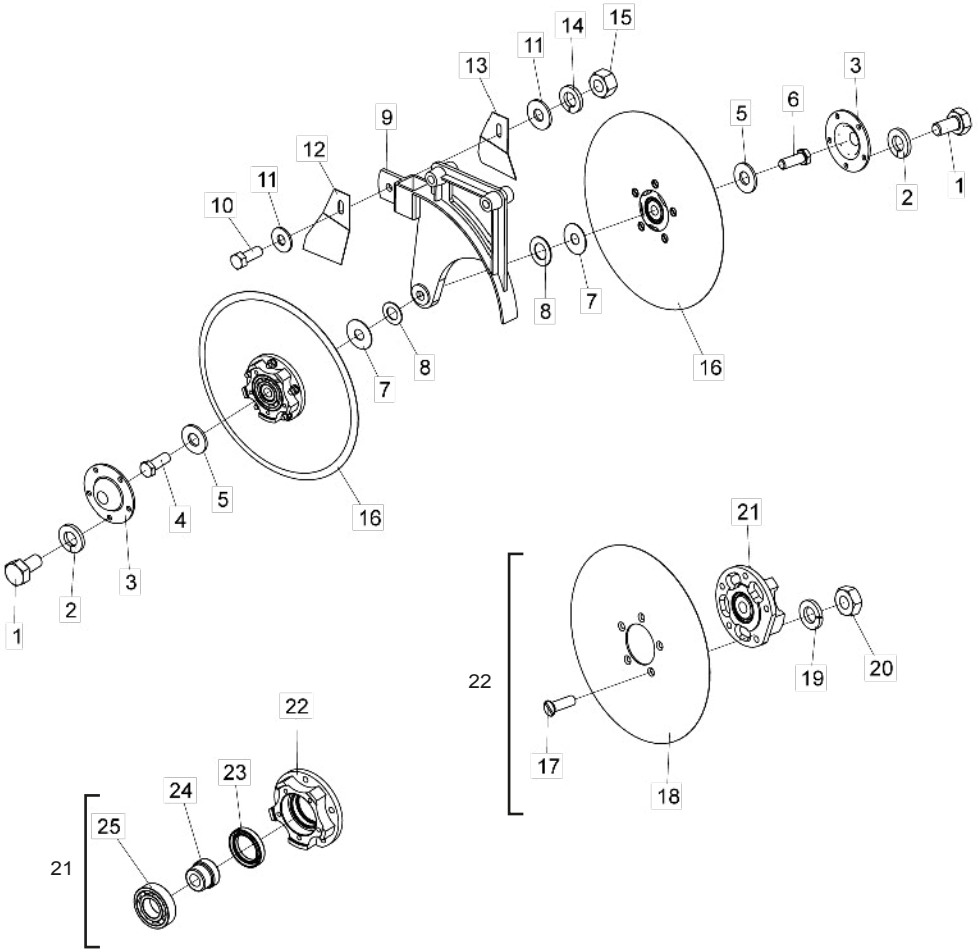

Item	Code	Product description	All
1	6020311000-9	Hexagonal Head Bolt 1/4" X 1/2" 20F Unc1A Gr5 Rt	10
2	6020010402-4	Pressure Washer 1/4" Media Industry	10
3	5096030002-2	Cover Of Double Disc Hub	2
4	6020311074-2	Hexagonal Head Bolt 5/8" X 1.3/4" 11F Unc1A Gr5 Rp	1
5	5024010239-8	Smooth Washer Ø16,5 X Ø37 X 3,00Mm	2
6	6020311073-4	Hexagonal Head Bolt 5/8" X 1.3/4" 11F Unc1A Gr5 Rp	1
7	5024010051-4	Smooth Washer Ø16 X Ø44 X 1,21Mm	2
8	5024010059-0	Smooth Washer Ø16,5 X Ø29 X 1,21Mm	4
9	5530410050-7	Support Of Double Disc For Seed (Conventional)	1
10	6020310452-1	Hexagonal Head Bolt M10 X 1,50 X 25Mm Cl8.8 Rt	1
11	5024010075-1	Smooth Washer Ø10,3 X Ø25 X 2,00Mm	2
12	5352030047-0	Right Scraper Of Discs	1
13	5352030048-8	Left Scraper Of Discs	1
14	6020010394-0	Pressure Washer M10 Media	1
15	6020310822-5	Hexagonal Nut M10 X 1,50 Ma Cl8 Ch.17Mm H.8,00Mm	1
16	5204010348-1	Complete Hub (Plain Disc Ø13" X 3,00Mm) 5 Holes	2
17	6020310235-9	Plain Head Bolt M8 X 1,25 X 25Mm Cl8.8 Rt	10
18	2853346539-2	Coulter Plain Disc Blade 13 X 3,00 Hc Rd 68,6Mm + 5H Rd 8,8Mm R=47,5Mm Single Bevel	2
19	6020010004-5	Pressure Washer M8 Media	10
20	6020310454-8	Hexagonal Nut M8 X 1,25 Ma Cl8 Ch.13Mm H.6,50Mm	10
21	5204020094-0	Assembled Hub	2
22	5204020026-6	Double Disc Hub	2
23	6020350259-4	Retainer Ø35,00 X Ø50,00 X 8,00Mm	2
24	5080010042-6	Bushing Of Rim	2
25	6020350020-6	Bearing 6206	2

• Cutting Disc

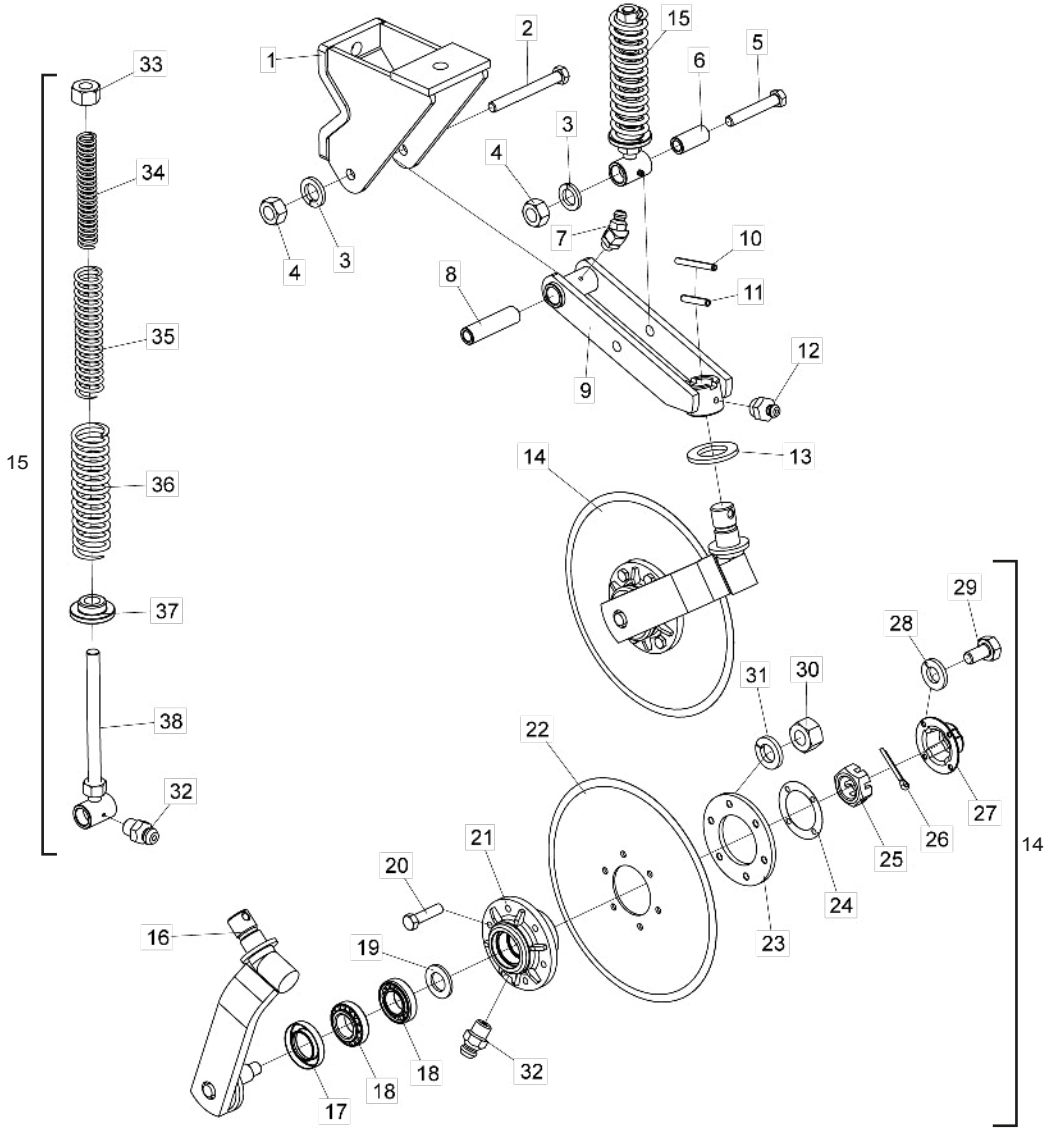

Item	Code	Product description	All	Smooth Plain Disc	Rippled Plain Disc
1	5530010049-9	Upper Support Of Coulter Disc	1		
2	6020310164-6	Hexagonal Head Bolt M16 X 2,00 X 140Mm Cl8.8 Rp	1		
3	6020010124-6	Pressure Washer M16 Media	2		
4	6020310818-7	Hexagonal Nut M16 X 2,00 Ma Cl8 Ch.24Mm H.13,00Mm	2		
5	6020310150-6	Hexagonal Head Bolt M16 X 2,00 X 100Mm Cl8.8 Rp	1		
6	5080020661-5	Bushing Of Ø16,2 X Ø26,5 X 57Mm	1		
7	6020130104-4	Grease Fitting 1/4"	1		
8	5080010195-3	Bushing Of Ø16,2 X Ø26,5 X 99Mm	1		
9	5530010050-2	Support Of Coulter Disc	1		
10	6020310472-6	Heavy Elastic Pin Ø6 X 55Mm		1	
11	6020310510-2	Heavy Elastic Pin Ø10 X 55Mm	1		
12	6020130108-7	Grease Fitting 1/8"	1		
13	5024010107-3	Smooth Washer Ø36 X Ø61 X 5,00Mm	1		
14	5124010023-5	Row Planter (Plain Disc Blade 14" X4Mm)		1	
14	5124010317-0	Row Planter (Rippled Plain Disc Blade 14"X4Mm)			1
15	5484010004-1	Complete Spring Regulator	1		
16	5530016348-2	Support W/Shaft Of Disc	2		
17	6020350244-6	Retainer Ø35,00 X Ø58,00 X 10,00Mm	2		
18	6020350077-0	Bearing 44610/49	4		
19	5024010024-7	Smooth Washer Ø20 X Ø38 X 1,21Mm		1	
20	6020310980-9	Hexagonal Head Bolt M10 X 1,50 X 40Mm Cl8.8 Rt		6	
20	6020310560-9	Hexagonal Head Bolt M8 X 1,25 X 35Mm Cl8.8 Rt			6
21	5204010499-2	Disc Hub	2		
22	2855397388-2	Coulter Plain Disc Blade 14 X 4,00 Hc Rd 80Mm + 6H Rd 10,3Mm D-115Mm Doble Bevel		1	
22	3255397203-4	Rippled Plain Disc Blade 14 X 4,00 Hc Rd 80Mm + 6H Rd 8,7Mm D=115Mm Doble Bevel			1
23	5284010001-4	Flange Of Disc Hub	2		
24	6020190098-3	Gascket Ø50,3 X Ø73,5 X 1/64"	2		
25	6020310780-6	Nut M20 X 2,50 Ma Cl8 Ch.30Mm H.16,00Mm Without Crown	2		
26	6020050101-5	Cotterpin 1/8" X 1"	2		
27	6020050640-8	Hub Cap	2		
28	6020010122-0	Pressure Washer M6 Media	8		
29	6020310291-0	Hexagonal Head Bolt M6 X 1,00 X 15Mm Cl8.8 Rt	8		
30	6020310822-5	Hexagonal Nut M10 X 1,50 Ma Cl8 Ch.17Mm H.8,00Mm		6	
30	6020310454-8	Hexagonal Nut M8 X 1,25 Ma Cl8 Ch.13Mm H.6,50Mm			6
31	6020010394-0	Pressure Washer M10 Media		6	
31	6020010124-6	Pressure Washer M16 Media			6
32	6020130100-1	Grease Fitting 1/4"	3		
33	6020310784-9	Hexagonal Nut 3/4" 10F Unc Gr5 Ch.1.1/4" Height 11,00Mm	1		
34	6020250208-6	Helical Spring Ø21 X Ø29 X 180Mm Wire=Ø4Mm Internal	1		
35	6020250206-0	Helical Spring Ø30,5 X Ø41,5 X 200Mm Wire=Ø5,5Mm	1		
36	6020250207-8	Helical Spring Ø43,5 X Ø57,5 X 200Mm Wire=Ø7Mm External	1		
37	6010600980-8	Back Bushing	1		
38	5232010030-5	Regulating Shaft With Bushing	1		

• Furrower W/ Complete Support

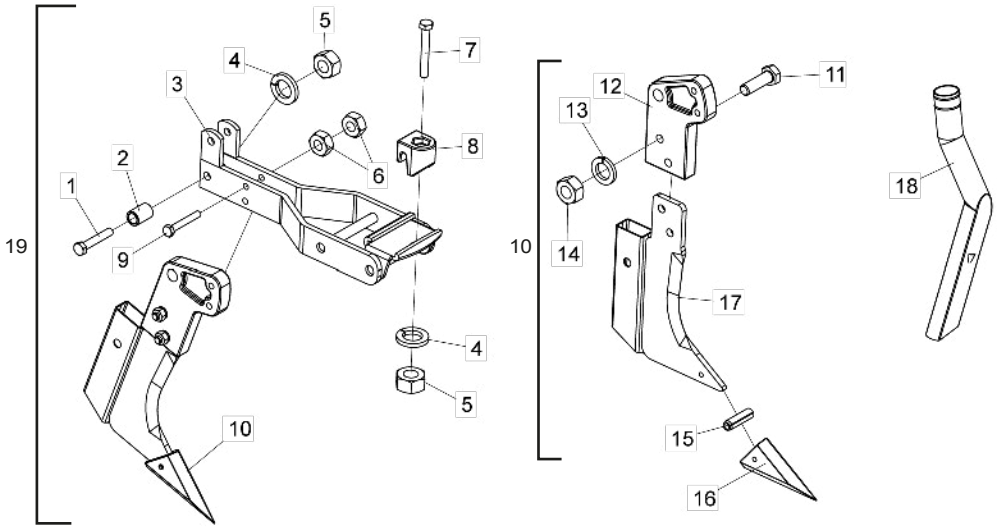

Item	Code	Product description	All
1	6020310978-7	Hexagonal Head Bolt M12 X 1,75 X 70Mm Cl8.8 Rt	1
2	5080010016-7	Articulation Bushing	1
3	5530010048-0	Support Of Forrower	1
4	6020010395-8	Pressure Washer M12 Media	2
5	6020310820-9	Hexagonal Nut M12 X 1,75 Ma Cl8 Ch.19Mm H.10,00Mm	2
6	6020310822-5	Hexagonal Nut M10 X 1,50 Ma Cl8 Ch.17Mm H.8,00Mm	2
7	6020317495-3	Hexagonal Head Bolt M12 X 1,75 X 90Mm Cl8.8 Rp	1
8	6010600896-8	Hitch Lock Of Discs Support	1
9	6020317444-9	Hexagonal Head Bolt M10 X 1,50 X 70Mm Cl8.8 Rt	1
10	5532010051-7	Furrower	1
11	6020310152-2	Hexagonal Head Bolt M12 X 1,75 X 40Mm Cl8.8 Rp	2
12	5530390016-0	Right Support	1
13	6020010395-8	Pressure Washer M12 Media	2
14	6020310820-9	Hexagonal Nut M12 X 1,75 Ma Cl8 Ch.19Mm H.10,00Mm	2
15	6020310490-4	Heavy Elastic Pin Ø8 X 28Mm	1
16	6010601364-3	Furrower Point	1
17	5532010039-8	Furrower Support	1
18	6020030118-0	Right Round Funnel	1
19	5532010050-9	Complete Furrower Of Tyne W/Support	1

Obs: The Furrower (19) is composed of all mentioned parts in this list, but when sold complete, the item 18 do no go together.

• Support W/Point

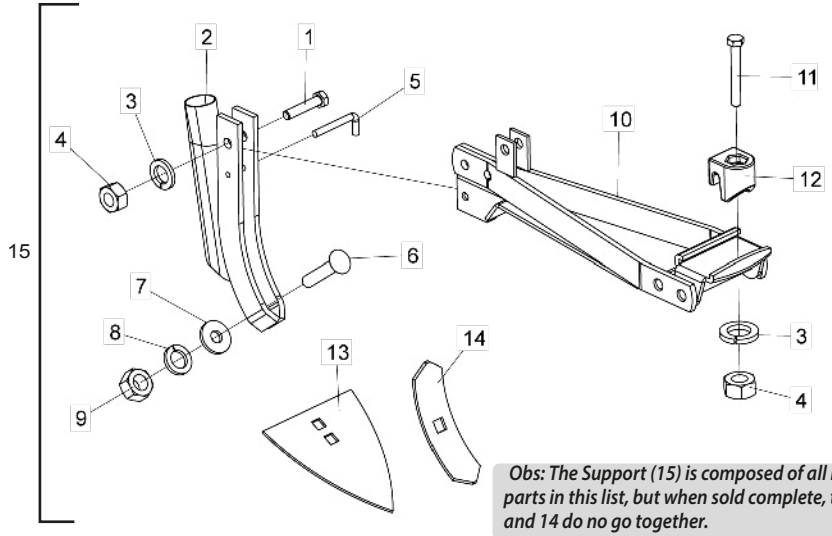

Obs: The Support (15) is composed of all mentioned parts in this list, but when sold complete, the itens 13 and 14 do no go together.

Item	Code	Product description	All
1	6020310210-3	Hexagonal Head Bolt M12 X 1,75 X 60Mm Cl8.8 Rt	1
2	5530080008-3	Support	1
3	6020010395-8	Pressure Washer M12 Media	2
4	6020310820-9	Hexagonal Nut M12 X 1,75 Ma Cl8 Ch.19Mm H.10,00Mm	2
5	5432020009-4	Pin "L" Ø6,8 X 26Mm	1
6	6020310273-1	French Head Bolt M16 X 2,00 X 80Mm Cl8.8 Rp	1
7	5024010298-3	Smooth Washer Ø17 X Ø44 X 4,75Mm(Galvanized)	1
8	6020010124-6	Pressure Washer M16 Media	1
9	6020310818-7	Hexagonal Nut M16 X 2,00 Ma Cl8 Ch.24Mm H.13,00Mm	1
10	5530014996-0	Support	1
11	6020317495-3	Hexagonal Head Bolt M12 X 1,75 X 90Mm Cl8.8 Rp	1
12	6010600896-8	Hitch Lock Of Discs Support	1
13	4708100005-7	Sweep 8" X 5,00Mm	1
14	4750100101-1	Sweep 8" X 2.1/4" X 5,00Mm	1
15	5530014999-4	Complete Support W/Point	1

• Seed Distributor Disc

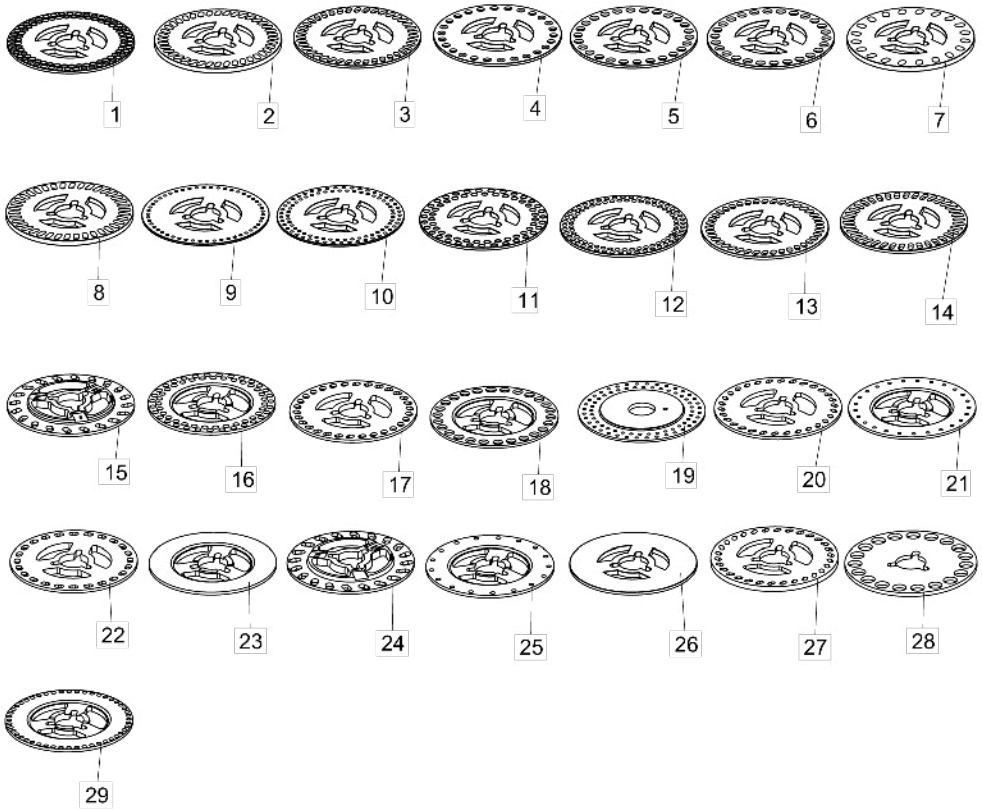

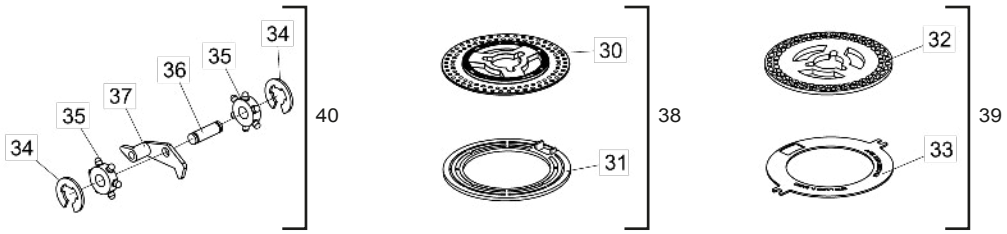

Item	Code	Product description	All
1	6020070009-3	Soy Beam Distributor Disc 90H Ø8,5Mm (Ø43 X Ø186 X 4,50Mm)	1
2	6020070002-6	Soy Beam Distributor Disc 40H 8 X 16Mm (Ø43 X Ø186 X 8,00Mm)	1
3	6020070080-8	Soy Beam Distributor Disc 40H 7,5 X 15Mm (Ø43 X Ø186 X 4,50Mm)	1
4	6020070072-7	Maize/Rice Distributor Disc 26H Ø11Mm (Ø43 X Ø186 X 4,50Mm)	1
5	6020070074-3	Maize/Rice Distributor Disc 26H Ø13Mm (Ø43 X Ø186 X 4,50Mm)	1
6	6020070070-0	Maize/Rice Distributor Disc 26H Ø13,5Mm (Ø43 X Ø186 X 4,50Mm)	1
7	6020070006-9	Beam Distributor Disc 20H 10 X 15Mm (Ø43 X Ø186 X 8,00Mm)	1
7	6020070102-2	Small Bean Distributor Disc 64H 8,5 X 13Mm (Ø43 X Ø186 X 5,50Mm)	1
7	6020070103-0	Sunflower Distribitor Disc 72H 7,5 X 12,5Mm (Ø43 X Ø186 X 5,50Mm)	1
8	6020070003-4	Soy Beam Distributor Disc 38H 8 X 18Mm(Ø43 X Ø186 X 8,00Mm)	1
9	6020070082-4	Sorgum Distributor Disc 50H Ø4,8Mm (Ø43 X Ø186 X 3,00Mm)	1
10	6020070087-5	Soy/Sorgum Distributor Disc 90H Ø5Mm (Ø43 X Ø186 X 3,00Mm)	1
11	6020070007-7	Soy Distributor Disc 62H Ø8,5Mm (Ø43 X Ø186 X 4,50Mm)	1
12	6020070086-7	Soy Beam Distributor Disc 90H Ø7Mm (Ø43 X Ø186 X 4,50Mm)	1
13	6020070088-3	Beam Distributor Disc 40H 8 X 13,5Mm (Ø43 X Ø186 X 4,50Mm)	1
14	6020070078-6	Soy Beam Distributor Disc 38H 7,5 X 18Mm (Ø43 X Ø186 X 4,50Mm)	1
15	5220020095-0	Sunflower Distributor Disc 20F 5,5 X 13Mm(Ø43 X Ø186 X 4,50Mm)	1
15	5220020086-1	Sunflower Distributor Disc 20F 6 X 15Mm(Ø43 X Ø186 X 4,50Mm)	1
16	5220020096-9	Soy Beam Distributor Disc Double Rows 62H Ø9,5Mm(Ø43 X Ø186 X 4,50Mm)	1
16	6020070076-0	Soy Beam Distributor Disc 34H 10,5 X 15Mm (Ø43 X Ø186 X 4,50Mm)	1
16	6020070004-2	Soy Beam Distributor Disc 34H 10,5 X 15Mm (Ø43 X Ø186 X 8,00Mm)	1
17	5220020043-8	Seed Distributor Seed 30H 8,5 X 12Mm Cinza(Ø43 X Ø186 X 4,50Mm)	1
18	5220020078-0	Maize Distributor Disc 26H Ø13,49Mm(Ø43 X Ø186 X 4,00Mm)	1
18	6020071726-3	Maize Distribitor Disc 28H Ø9,0Mm (Ø43 X Ø186 X 4,50Mm)	1
18	5220020081-0	Popcorn Maize Distributor Disc 48H Ø7,14Mm(Ø43 X Ø186 X 4,00Mm)	1
18	6020070890-6	Sweet Maize Distributor Disc 29H 8 X 12,5Mm (Ø43 X Ø186 X 4,50Mm)	1
19	5220020035-7	Sorgum Distributor Disc Double Rows 72H Ø5,5Mm(Ø45 X Ø214 X 4,00Mm)	1
20	5220020101-9	Cotton Distributor Disc 30H 5,5 X 11Mm(Ø43 X Ø186 X 4,50Mm)	1
21	5220020079-9	Beetroot Distributor Disc 25H Ø5,56Mm(Ø43 X Ø186 X 4,00Mm)	1
21	5220020080-2	Beetroot Distributor Disc 25H Ø5,56Mm(Ø43 X Ø186 X 4,50Mm)	1
22	5220020046-2	Maize Distributor Disc 24H 9 X 14Mm(Ø43 X Ø186 X 4,50Mm)	1
23	5220020017-9	Seed Distributor Disc Without Hole (Ø43 X Ø186 X 8,00Mm)	1
24	5220020077-2	Sunflower Distributor Disc 20H 7 X 16Mm(Ø43 X Ø186 X 4,50Mm)	1
25	5220020030-6	Sorghum Distributor Disc 17H Ø7,14Mm(Ø43 X Ø186 X 4,50Mm)	1
26	6020070001-8	Seed Distributor Disc Without Hole (Ø43 X Ø186 X 4,50Mm)	1
27	5220020075-6	Cotton Distributor Disc 30H 5,5 X 11Mm(Ø43 X Ø186 X 7,90Mm)	1
28	6020070005-0	Peanut Distributor Disc 19H Ø20Mm (Ø43 X Ø193 X 6,00Mm)	1
29	5220020082-9	Popcorn Maize Distributor Disc 48H Ø7,14Mm(Ø43 X Ø186 X 4,50Mm)	1
30	6020070087-5	Soy Beam/Sorgum Distributor Disc 90H Ø5Mm (Ø43 X Ø186 X 3,00Mm)	1
31	6020010073-8	Plastic Ring Ø185 X 5Mm P/ Disco De Sorgo	1
32	6020070102-2	Small Beam Distributor Disc 64H 8,5 X 13Mm (Ø43 X Ø186 X 5,50Mm)	1
32	6020070103-0	Sunflower Distribitor Disc 72H 7,5 X 12,5Mm (Ø43 X Ø186 X 5,50Mm)	1
33	6020070140-5	Disc Ø128 X Ø185 X 2,50Mm	1
34	6020010246-3	Retaining Ring Rs-05	2
35	6020350784-7	Seed Batcher Rossete	2
36	6020310526-9	Pin Ø7 X 18,5 X 23,5Mm	1
37	6020130205-9	Batcher Trigger	1
38	5220020037-3	Complete Sorghum Distributor Disc 90H Ø5Mm(Ø43 X Ø186 X 3,00Mm)	1
39	5220010002-6	Dry Beam Distributor Disc 64H 8,5 X 13Mm(Ø43 X Ø186 X 5,50Mm) With Ring	1
39	5220010001-8	Small Beam Distributor Disc 72H 7,5 X 12,5Mm(Ø43 X Ø186 X 5,50Mm) With Ring	1
40	6020130206-7	Trigger Cleaner	1

• Peanut Seed Kit

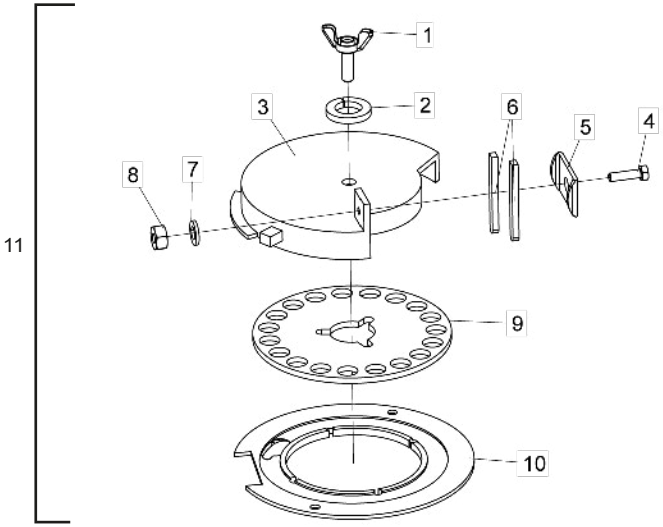

Item	Code	Product description	All
1	5420110002-2	Bolt 1/2"	1
2	6020010410-5	Pressure Washer 1/2" Media Industry	1
3	5484060002-8	Internal Regulator For Peanut	1
4	6020310019-4	Hexagonal Head Bolt 1/4" X 1" 20F Unc1A Gr2 Rt	1
5	5460040003-0	Clamp	1
6	5212010001-7	Seed Drop Plastiprene	2
7	6020010402-4	Pressure Washer 1/4" Media Industry	1
8	6020310742-3	Hexagonal Nut 1/4" 20F Unc Gr5 Ch.7/16" Height 5,50Mm	1
9	6020070005-0	Peanut Distributor Disc 19F Ø20Mm (Ø43 X Ø193 X 6,00Mm)	1
10	5220010045-0	Metallic Dual Side Disc For Peanut Seeds (Ø132 X Ø233,2 X 7,50Mm)	1
11	5528010691-6	Conversion System For Peanut Planting With Disc 19F Ø20Mm	1

• Sprockets

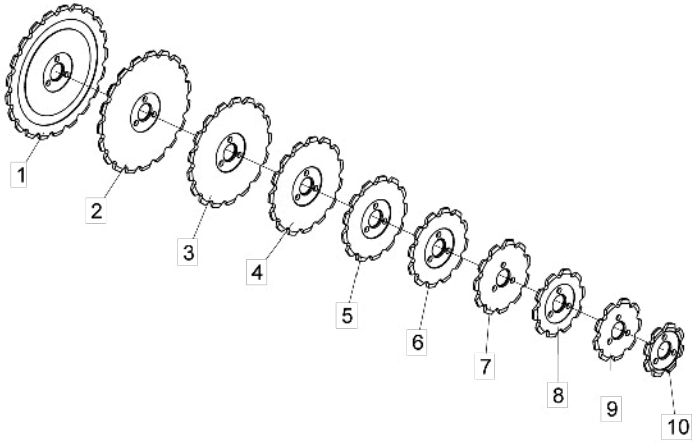

Item	Code	Product description	All
1	5256030021-2	Sprocket 21 Teeth	1
2	5256030019-0	Sprocket 19 Teeth	1
3	5256030018-2	Sprocket 17 Teeth	1
4	5256030013-1	Sprocket 15 Teeth	1
5	5256030010-7	Sprocket 13 Teeth	1
6	5256030012-3	Sprocket 12 Teeth	1
7	5256030030-1	Sprocket 11 Teeth	1
8	5256030003-4	Sprocket 10 Teeth	1
9	5256030029-8	Sprocket 9 Teeth	1
10	5256030006-9	Sprocket 8 Teeth	1

• Stickers

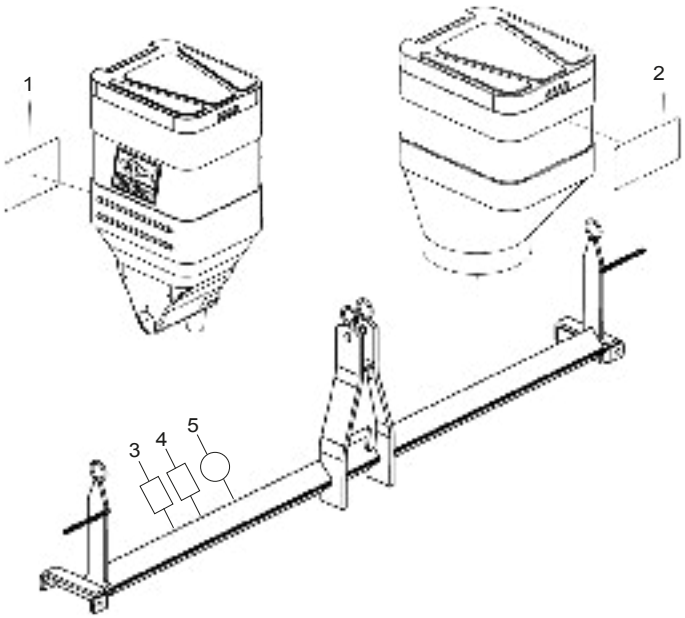

Item	Code	Product description	All
1	6020071322-5	Sticker Plb-Directa Baldan "Seed Box" (100 X 200Mm)	-
2	6020071325-0	Sticker Plb-Directa Baldan "Fertilizer Box" (210 X 145Mm)	-
3	6020071026-9	Sticker Brazilian Company(48 X 60Mm)	1
4	6020071027-7	Sticker ISSO Certificate 9001-2015 (48 X 60Mm)	1
5	5206010317-8	Sticker "Ok" Approved Quality Control	1

Items 1 and 2 - The Stickers Quantity is according to the number of lines

Item 1

Item 2

Item 3

Item 4

Item 5

BALDAN

Numerical Index

Code	Page	Item	Code	Page	Item	Code	Page	Item	Code	Page	Item	Code	Page	Item	Code	Page	Item	Code	Page	Item	Code	Page	Item	Code	Page	Item
2517010740-6	6	20	5024010073-5	12	84	5080020661-5	19	6	5124010526-1	5	*47	5204020094-0	18	21	5232011995-2	16	6	5268010072-1	12	54	5460040003-0	22	5	5530260015-4	10	55
2517010741-4	6	20	5024010073-5	13	5	5080020830-8	5	43	5124010526-1	6	*1	5204050013-8	10	38	5232012000-4	15	12	5268010073-0	10	72	5464010390-9	10	48	5530260015-4	12	68
2517010742-2	6	20	5024010075-1	13	9	5084010022-4	5	1	5124010526-1	8	7	5204050013-8	12	38	5232012001-2	16	4	5268010073-0	12	91	5464010390-9	12	53	5530390016-0	20	12
2517010743-0	6	20	5024010075-1	17	10	5084010023-2	5	1	5124010527-0	5	*47	5204050014-6	10	37	5232012005-5	10	67	5268010824-2	12	52	5464010392-5	12	51	5530400013-8	16	3
2517010744-9	6	20	5024010075-1	18	11	5084010105-0	5	1	5124010527-0	6	*1	5204050014-6	12	37	5232012005-5	12	78	5268010825-0	12	91	5484010004-1	19	15	5530410050-7	18	9
2517010745-7	6	20	5024010107-3	19	13	5084050007-9	5	1	5124010527-0	7	7	5204060017-5	10	53	5232012005-5	12	86	5272010015-0	5	37	5484060002-8	22	3	5532010039-8	20	17
2644346501-3	16	10	5024010142-1	5	42	5084050008-7	5	1	5124010593-8	5	*47	5204060017-5	12	66	5232012006-3	12	79	5284010001-4	19	23	5498010260-5	16	5	5532010050-9	20	19
2853346539-2	17	18	5024010160-0	10	58	5084050009-5	5	1	5124010593-8	7	7	5204070032-3	13	28	5232012007-1	12	80	5346020007-1	13	13	5498010272-9	5	*32	5532010051-7	20	10
2853346539-2	18	18	5024010160-0	12	61	5092010341-0	7	*2	5124030110-9	5	*35	5206010317-8	23	5	5232012008-0	10	64	5346020008-0	13	16	5498050001-5	10	46	5538014969-8	13	26
2855397388-2	19	22	5024010239-8	17	5	5092010341-0	7	*2	5124030111-7	6	*10	5212010001-7	22	6	5232012008-0	12	83	5352010008-0	10	34	5498050001-5	12	44	5538014970-1	13	23
3255397203-4	19	22	5024010239-8	18	5	5092010341-0	8	*2	5124030118-4	5	*34	5220010001-8	21	39	5232020035-0	5	41	5352010008-0	12	32	5498070008-1	10	*76	5558100005-6	10	43
4708100005-7	20	13	5024010298-3	10	7	5092010341-0	8	*2	5124030118-4	6	*15	5220010002-6	21	39	5232020177-2	10	54	5352010071-3	5	19	5498070008-1	12	*95	5558100005-6	10	51
4750100101-1	20	14	5024010298-3	12	8	5096010011-2	16	4	5124100019-6	7	*1	5220010045-0	22	10	5232020177-2	12	67	5352010072-1	5	16	5528010442-5	6	*6	5558100005-6	12	34
5018010015-3	14	4	5024010298-3	12	57	5096030002-2	17	3	5124100021-8	8	*1	5220020017-9	21	23	5232060236-0	13	18	5352030047-0	17	11	5528010443-3	6	*19	5558100005-6	12	64
5024010024-7	19	19	5024010298-3	20	7	5096030002-2	18	3	5136015444-4	10	74	5220020030-6	21	25	5232070080-9	10	41	5352030047-0	18	12	5528010592-8	6	*6	5558100005-6	13	2
5024010039-5	16	7	5024010328-9	13	12	5106010026-1	13	19	5136015444-4	12	93	5220020035-7	21	19	5232070080-9	12	36	5352030048-8	17	13	5528010691-6	22	11	5566010065-1	12	49
5024010051-4	17	7	5024010423-4	15	38	5112020017-1	17	12	5136015446-0	10	68	5220020037-3	21	38	5252010040-7	5	29	5352030048-8	18	13	5530010048-0	20	3	5566020043-5	10	26
5024010051-4	18	7	5024070007-4	13	15	5124010022-7	5	*48	5136015446-0	12	87	5220020043-8	21	17	5256030003-4	22	8	5386010001-7	5	31	5530010049-9	19	1	5566020043-5	12	25
5024010059-0	5	8	5040120738-1	10	10	5124010023-5	19	14	5136015449-5	12	74	5220020046-2	21	22	5256030006-9	10	42	5400010106-3	13	17	5530010050-2	19	9	5566040117-1	12	59
5024010059-0	10	71	5040120738-1	12	5	5124010317-0	19	14	5136020017-9	10	5	5220020075-6	21	27	5256030006-9	10	59	5404010083-3	10	1	5530011945-9	15	7	6010600770-8	5	4
5024010059-0	12	90	5044010347-0	15	14	5124010318-8	5	*49	5136020017-9	12	4	5220020077-2	21	24	5256030006-9	12	35	5404010083-3	12	1	5530012421-5	12	*48	6010600770-8	6	4
5024010059-0	17	8	5044010348-8	15	6	5124010520-2	5	*47	5136120010-5	5	9	5220020078-0	21	18	5256030006-9	12	62	5420010102-5	7	6	5530014996-0	20	10	6010600896-8	5	21
5024010059-0	18	8	5068060004-7	5	36	5124010520-2	6	*1	5164020004-2	15	13	5220020079-9	21	21	5256030006-9	22	10	5420010102-5	7	6	5530014999-4	20	15	6010600896-8	6	12
5024010068-9	10	35	5068060004-7	6	5	5124010520-2	8	7	5204010022-9	16	9	5220020080-2	21	21	5256030010-7	22	5	5420010102-5	8	6	5530016347-4	13	20	6010600896-8	20	8
5024010068-9	10	66	5072010004-2	16	3	5124010521-0	5	*47	5204010108-0	13	22	5220020081-0	21	18	5256030012-3	10	52	5420010102-5	8	6	5530016348-2	19	16	6010600896-8	20	12
5024010068-9	12	41	5080010016-7	20	2	5124010521-0	6	*1	5204010109-8	13	21	5220020082-9	21	29	5256030012-3	12	65	5420010103-3	15	2	5530080008-3	20	2	6010600980-8	19	37
5024010068-9	12	85	5080010042-6	17	23	5124010521-0	7	7	5204010110-1	13	30	5220020085-3	15	5	5256030012-3	22	6	5420110002-2	22	1	5530170144-5	10	19	6010601041-5	5	38
5024010073-5	7	5	5080010042-6	18	24	5124010522-9	5	*47	5204010348-1	17	16	5220020086-1	21	15	5256030013-1	22	4	5428020003-7	10	56	5530170144-5	12	18	6010601101-2	5	26
5024010073-5	7	5	5080010134-1	10	23	5124010522-9	6	*1	5204010348-1	18	16	5220020095-0	21	15	5256030018-2	13	3	5428020003-7	12	69	5530180062-1	5	22	6010601101-2	6	17
5024010073-5	8	5	5080010134-1	12	24	5124010522-9	8	7	5204010369-4	14	2	5220020096-9	21	16	5256030018-2	22	3	5432010024-3	5	11	5530220022-9	10	2	6010601364-3	20	16
5024010073-5	8	5	5080010195-3	19	8	5124010523-7	5	*47	5204010499-2	19	21	5220020101-9	21	20	5256030019-0	22	2	5432020009-4	20	5	5530220022-9	12	2	6020010004-5	7	4
5024010073-5	10	16	5080011663-2	10	28	5124010523-7	6	*1	5204020013-4	16	6	5220040001-1	5	*33	5256030021-2	22	1	5432090085-1	15	15	5530240033-3	10	3	6020010004-5	7	4
5024010073-5	10	65	5080011663-2	12	29	5124010523-7	7	7	5204020026-6	17	22	5220040001-1	6	*18	5256030029-8	22	9	5432120108-6	5	28	5530240033-3	12	3	6020010004-5	8	4
5024010073-5	12	15	5080020009-9	10	6	5124010524-5	8	*1	5204020026-6	18	22	5220040003-8	5	46	5256030030-1	22	7	5436012318-1	5	10	5530260014-6	10	47	6020010004-5	8	4
5024010073-5	12	77	5080020009-9	12	7	5124010525-3	7	*1	5204020094-0	17	21	5232010030-5	19	38	5268010072-1	10	49	5436012319-0	5	15	5530260014-6	12	50	6020010004-5	10	15

Numerical Index

Code	Page	Item	Code	Page	Item	Code	Page	Item	Code	Page	Item	Code	Page	Item	Code	Page	Item	Code	Page	Item	Code	Page	Item	Code	Page	Item
6020010004-5	10	63	6020010395-8	20	4	6020055658-8	12	88	6020071026-9	23	3	6020250206-0	19	35	6020310352-5	5	3	6020310742-3	22	8	6020311073-4	17	6	6020370142-2	15	19
6020010004-5	12	16	6020010395-8	20	13	6020055659-6	12	73	6020071027-7	23	4	6020250207-8	19	36	6020310388-6	16	11	6020310744-0	15	20	6020311073-4	18	6	6020370157-0	15	3
6020010004-5	12	76	6020010395-8	20	3	6020058438-7	5	2	6020071322-5	23	1	6020250208-6	19	34	6020310423-8	15	27	6020310770-9	6	2	6020311074-2	17	4	6020390293-2	5	30
6020010004-5	12	82	6020010400-8	15	39	6020058439-5	5	2	6020071325-0	23	2	6020250245-0	10	30	6020310424-6	15	25	6020310780-6	19	25	6020311074-2	18	4	6020390293-2	10	44
6020010004-5	13	6	6020010402-4	17	2	6020058440-9	5	2	6020071726-3	21	18	6020250245-0	12	46	6020310425-4	15	23	6020310784-9	19	33	6020311210-9	10	4	6020390293-2	10	50
6020010004-5	14	6	6020010402-4	18	2	6020058441-7	5	2	6020090502-7	10	73	6020250254-0	10	18	6020310437-8	13	8	6020310818-7	5	18	6020311210-9	12	6	6020390293-2	12	33
6020010004-5	17	20	6020010402-4	22	7	6020058442-5	5	2	6020090502-7	12	92	6020250254-0	12	19	6020310448-3	10	17	6020310818-7	10	9	6020311237-0	12	55	6020390293-2	12	63
6020010004-5	18	19	6020010403-2	5	5	6020058443-3	5	2	6020090685-6	10	29	6020250286-8	12	58	6020310448-3	12	14	6020310818-7	12	10	6020311257-5	16	13	6020390293-2	13	1
6020010073-8	21	31	6020010410-5	22	2	6020070001-8	21	26	6020090685-6	12	30	6020250322-8	5	40	6020310452-1	14	1	6020310818-7	19	4	6020311265-6	5	6	6020390294-0	12	56
6020010122-0	15	8	6020010414-8	6	3	6020070002-6	21	2	6020130100-1	10	61	6020250322-8	6	7	6020310452-1	17	9	6020310818-7	20	9	6020311269-9	12	21	6020390405-6	15	18
6020010122-0	16	12	6020015920-1	13	25	6020070003-4	21	8	6020130100-1	12	72	6020250328-7	15	29	6020310452-1	18	10	6020310819-5	7	3	6020311269-9	13	4	6020390869-8	13	35
6020010122-0	19	28	6020030088-5	13	32	6020070004-2	21	16	6020130100-1	15	17	6020250339-2	5	39	6020310454-8	10	14	6020310819-5	7	3	6020311269-9	14	3	6020390869-8	15	10
6020010124-6	5	17	6020030118-0	20	18	6020070005-0	21	28	6020130100-1	19	32	6020250339-2	6	9	6020310454-8	10	62	6020310819-5	8	3	6020317443-0	10	21	6020395063-5	13	27
6020010124-6	10	8	6020030123-7	5	27	6020070005-0	22	9	6020130104-4	19	7	6020310019-4	22	4	6020310454-8	12	17	6020310819-5	8	3	6020317443-0	12	22			
6020010124-6	12	9	6020030123-7	6	16	6020070006-9	21	7	6020130108-7	10	40	6020310122-0	15	35	6020310454-8	12	75	6020310820-9	5	14	6020317444-9	20	9			
6020010124-6	19	3	6020030182-2	14	5	6020070007-7	21	11	6020130108-7	10	75	6020310150-6	19	5	6020310454-8	12	81	6020310820-9	6	14	6020317445-7	10	33			
6020010124-6	19	31	6020050043-4	10	32	6020070009-3	15	4	6020130108-7	12	42	6020310151-4	10	20	6020310454-8	13	7	6020310820-9	10	25	6020317445-7	12	31			
6020010124-6	20	8	6020050043-4	12	45	6020070009-3	21	1	6020130108-7	12	94	6020310151-4	12	20	6020310454-8	14	7	6020310820-9	12	27	6020317495-3	5	20			
6020010196-3	16	2	6020050101-5	5	7	6020070070-0	21	6	6020130108-7	13	31	6020310152-2	5	23	6020310454-8	17	19	6020310820-9	16	1	6020317495-3	6	11			
6020010246-3	15	31	6020050101-5	19	26	6020070072-7	21	4	6020130108-7	13	33	6020310152-2	10	39	6020310454-8	18	20	6020310820-9	20	5	6020317495-3	10	22			
6020010246-3	21	34	6020050104-0	12	60	6020070074-3	21	5	6020130108-7	16	8	6020310152-2	12	39	6020310454-8	19	30	6020310820-9	20	14	6020317495-3	12	23			
6020010252-8	10	70	6020050106-6	10	57	6020070076-0	21	16	6020130108-7	19	12	6020310152-2	20	11	6020310457-2	16	1	6020310820-9	20	4	6020317495-3	20	7			
6020010252-8	12	89	6020050106-6	12	70	6020070078-6	21	14	6020130110-9	5	45	6020310164-6	19	2	6020310472-6	19	10	6020310822-5	10	13	6020317495-3	20	11			
6020010282-0	16	8	6020050113-9	5	44	6020070080-8	21	3	6020130112-5	10	31	6020310210-3	10	36	6020310485-8	10	60	6020310822-5	12	13	6020350020-6	17	25			
6020010394-0	10	12	6020050113-9	16	5	6020070082-4	21	9	6020130112-5	12	47	6020310210-3	12	40	6020310485-8	12	71	6020310822-5	13	11	6020350020-6	18	25			
6020010394-0	12	12	6020050122-8	10	45	6020070086-7	21	12	6020130204-0	15	36	6020310210-3	20	1	6020310490-4	20	15	6020310822-5	14	8	6020350045-1	16	7			
6020010394-0	13	10	6020050122-8	12	43	6020070087-5	21	10	6020130205-9	15	33	6020310235-9	17	17	6020310510-2	19	11	6020310822-5	17	15	6020350077-0	19	18			
6020010394-0	17	14	6020050404-9	15	26	6020070087-5	21	30	6020130205-9	21	37	6020310235-9	18	17	6020310526-9	15	34	6020310822-5	18	15	6020350116-4	15	41			
6020010394-0	18	14	6020050423-5	15	21	6020070088-3	21	13	6020130206-7	15	30	6020310259-6	15	16	6020310526-9	21	36	6020310822-5	19	30	6020350244-6	19	17			
6020010394-0	19	31	6020050640-8	19	27	6020070102-2	21	7	6020130206-7	21	40	6020310273-1	20	6	6020310560-9	13	14	6020310822-5	20	6	6020350255-1	13	29			
6020010395-8	5	13	6020055065-2	13	34	6020070102-2	21	32	6020130207-5	15	28	6020310279-0	5	12	6020310560-9	19	20	6020310978-7	20	1	6020350259-4	17	24			
6020010395-8	6	13	6020055066-0	13	24	6020070103-0	21	7	6020190098-3	19	24	6020310291-0	15	9	6020310567-6	10	11	6020310980-9	19	20	6020350259-4	18	23			
6020010395-8	10	24	6020055067-9	15	11	6020070103-0	21	32	6020250048-2	5	25	6020310291-0	19	29	6020310567-6	12	11	6020311000-9	17	1	6020350784-7	15	32			
6020010395-8	12	26	6020055068-7	15	1	6020070140-5	21	33	6020250111-0	5	24	6020310349-5	10	27	6020310607-9	15	24	6020311000-9	18	1	6020350784-7	21	35			
6020010395-8	16	2	6020055658-8	10	69	6020070890-6	21	18	6020250111-0	6	8	6020310349-5	12	28	6020310740-7	15	40	6020311025-4	15	22	6020350876-2	15	37			

Baldan Implementos Agrícolas S/A.

Avenida Baldan, 1500 | Nova Matão
Zip Code: 15993-000 | Matão/SP. | Brasil
Phone: +55 (16) 3221-6500
www.baldan.com.br
sac@baldan.com.br | export@baldan.com.br