Instruction Manual

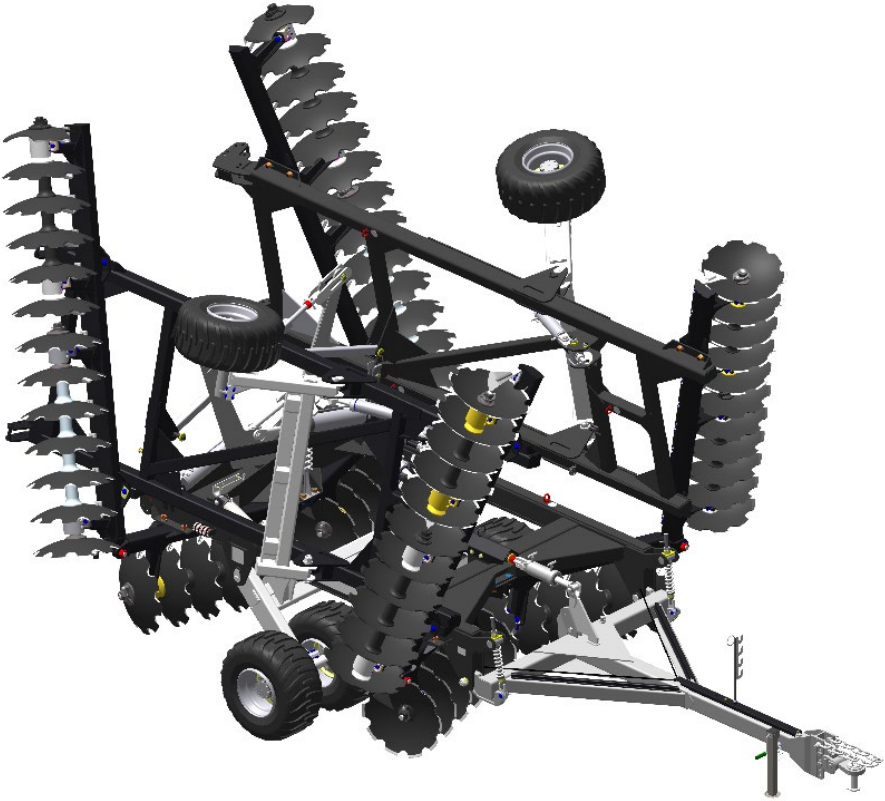

GCRTIS

Tandem Intermediate Control Harrow

BALDAN

▪ Presentation

We appreciate the preference and would like to congratulate you for excellent choice you just made, since you have acquired a product manufactured with **BALDAN IMPLEMENTOS AGRÍCOLAS S/A** technology**.**

This manual will guide you through the procedures required since its acquisition until operational procedures of usage, safety and maintenance.

BALDAN assures that it has delivered this implement for resale in full and in perfect conditions.

Resale was responsible for the custody and maintenance during the period in its possession, and also for the assembly, retightening, lubrication and overhaul.

During the technical delivery, dealer should guide the user regarding maintenance, safety, their obligations in eventual technical assistance, strict compliance with the warranty term and reading the instructions manual.

Any technical assistance request while in warranty must be made to the dealer from whom you have purchased it.

We reiterate the need for a careful read of the warranty certificate and compliance of all items from this manual, because by doing so you will increase the life of your device.

Instruction Manual

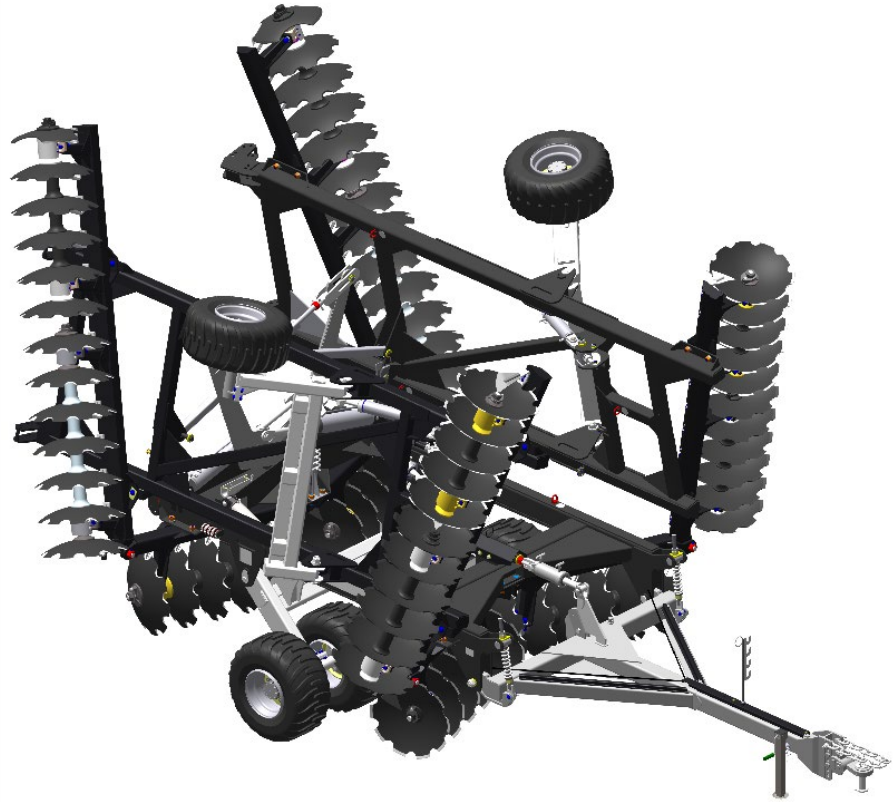

Tandem Intermediate Remote Control Harrow

BALDAN IMPLEMENTOS AGRÍCOLAS S/A.
CNPJ: 52.311.347/0009-06
Insc. Est.: 441.016.953.110

Scan the QR Code on the identification plate of your device and access this Instruction Manual online.

BALDAN

Index

BALDAN WARRANTY **08**
GENERATION INFORMATION **09**
To the owner *09*
SAFETY RULES **10**
To the operator ..... *10 - 13*
WARNINGS ..... **14 - 15**
COMPONENTS **16**
GCRTIS - Tandem Intermediate Remote Control Harrow (Without roller) *16*
GCRTIS - Tandem Intermediate Remote Control Harrow (With roller) *17*
DIMENSIONS **18**
GCRTIS 62 / 66 / 70 Discs *18*
SPECIFICATIONS **19**
GCRTIS - Tandem Intermediate Remote Control Harrow *19*
ASSEMBLY **20**
Assembly of discs section *20*
Assembly of finishing disc *20*
Assembly of discs sections - GCRTIS 62 discs *22*
Assembly of discs sections - GCRTIS 66 discs *23*
Assembly of discs sections - GCRTIS 70 discs *24*
Assembly of central frames in the central strut *25*
Assembly of discs sections in the frames of the central strut *26*
Assembly of side frames in the side strut *27*
Assembly of discs sections in the side frames of left side strut *28*
Assembly of scrapers *29*
Assembly of left side frames in the central frames *30*
Assembly of central support of the wheel axle *31*
Assembly of the right side support of the wheel axle *31*
Assembly of the right side support of the wheel axle in the right side strut *32*
Assembly of the central support of the wheel axle in the central strut *33*
Assembly of tires *34*
Assembly of the coupling head *35*
Assembly of the hydraulic cylinder in the coupling head *36*
Assembly of the hydraulic cylinders in the central support of the wheel axle *37*
Assembly of the hydraulic cylinder in the right side support of the wheel axle *38*
Assembly of the frames articulation supports *38*
Assembly of the frames adjusters *40*
Assembly of the central shaft *41*
Assembly of central shaft in the central strut *41*
Assembly of the signaling plate *42*

Index

Assembly the cutting rollers (Optional) *43*
Assembly of electrical system *44*
Assembly of lights *45*
Assembly of hydraulic system - GCRTIS 62 / 66 / 70 discs *46*

COUPLING **47**
Harrow coupling in the tractor bar of the tractor *47*

LEVELLING **48**
Levelling of the harrow - Part I *48*
Levelling of the harrow - Part II *49*
Levelling of the harrow - Part III *50*
Levelling of the harrow - Part IV *51*
Levelling of the harrow - Part V *52*

ADJUSTMENTS **53**
Adjustments for transport - Part I *53*
Adjustments for transport - Part II *54*
Adjustments for transport - Part III *55*
Adjustments for transport - Part IV *56*
Adjustments for transport - Part V *57*
Adjustments for working depth - Part I *58*
Adjustments for working depth - Part II *59*
Adjustment of frames adjusters *60*

OPERATIONS **61**
Recomendations for operation - Part I *61*
Recomendations for operation - Part II *62*

CALCULATION **63**
Approximate hourly output *63*

MAINTENANCE **64**
Tires pressure *64*
Lubrification *65*
Lubrication every 24 hours of work - Part I *66*
Lubrication every 24 hours of work - Part II *67*
Adjustments of the bearings of discs sections *68*
Bearings oil *69*
Operational maintenance *70*
Cares *71*
General Cleaning - Part I *71*
General Cleaning - Part II *72*
Harrow conservation - Part I *72*
Harrow conservation - Part II ..... *72 - 73*

Index

LIFTING **73**
Lifting points *73*
OPTIONAL **74**
Optional accessories *74*
IDENTIFICATION **75**
Identification plate *75*
Product Identification *76*
NOTES **77**
CERTIFICATE **78**
Certificate of warranty ..... *78 - 84*

▪ Baldan Warranty

BALDAN IMPLEMENTOS AGRÍCOLAS S/A ensures the dealer normal performance of the implement for a period of six (6) months as of the delivery date on the retail invoice to the first final consumer.

During this period, **BALDAN** undertakes to repair defects in material and/or of manufacture of its liability, including labor, freight and other expenses of the dealer's liability.

In the warranty period, request and replacement of eventual defective parts shall be made to the dealer of the area, who will submit the faulty piece for **BALDAN** analysis.

When this procedure is not possible and the resolving capacity of the dealer is exhausted, the dealer will request the support of **BALDAN** Technical Assistance through a specific form distributed to dealers.

After analyzing the replaced items by **BALDAN** Technical Assistance, and concluding that it is not a warranty, then the dealer will be responsible for the costs related to the replacement; as well as material expenses, travel including accommodation and meals, accessories, lubricant used and other expenses arising from the call out to Technical Assistance, and **BALDAN** company is authorized to carry the respective invoice in the name of the resale.

Any repair carried out in the product within the dealer warranty deadline will only be authorized by **BALDAN** upon previous budget presentation describing parts and workforce to be executed.

The product is excluded from this term if it is repaired or modified by representatives not belonging to the **BALDAN** dealer network, as well as the application of non-genuine parts or components to the user's product.

This warranty is void where it is found that the defect or damage is caused by improper use of the product, failure to follow instructions or inexperience of the operator.

It is agreed that this warranty does not cover tires, polyethylene tanks, cardan shafts, hydraulic components, etc., which are equipment guaranteed by their manufacturers.

Manufacturing and/or material defects, object of this warranty term, will not constitute, under any circumstances, grounds for termination of a purchase agreement, or for indemnification of any nature.

BALDAN reserves the right to change and/or perfect the technical characteristics of its products, without previous notice, and without obligation to proceed in the same way with the products previously manufactured.

General Information

• To the owner

BALDAN IMPLEMENTOS AGRÍCOLAS S/A is not responsible for any damaged caused by accident due to usage, transportation, or in the improper or incorrect transportation of its implement, whether by negligence and/or inexperience of any person.

Only people with complete knowledge of the tractor and the implement should carry their transportation and operation.

BALDAN is not responsible for any damaged caused in unpredictable or unrelated situations to the normal use of the implement.

The incorrect handling of this equipment may result in severe or fatal accidents. Before starting the equipment, carefully read the instructions contained in this manual. Make sure that the person responsible for the operation is instructed as the correct and safe handling. Also make sure that the operator has read and understood the instructions manual of the product.

⚠ ATTENTION

NR-31 - SAFETY AND HEALTH AT WORK IN AGRICULTURE, LIVESTOCK FORESTRY, FOREST EXPLORATION AND AQUACULTURE.

The purpose of this Regulatory Standard is to establish the precepts to be observed in the organization and in the work environment, in a manner compatible with the planning and development of agriculture, livestock, forestry and aquaculture activities with the safety and health and environment work environment.

MR. OWNER OR OPERATOR OF THE EQUIPMENT.
Read and carefully comply with provisions of NR-31.

For more information, refer to the site and read in full NR-31.
http://portal.mte.gov.br/legislacao/normas-regulamentadoras-1.htm

Safety Rules

• To the operator

THIS SYMBOL INDICATES IMPORTANT SAFETY WARNING. IN THIS MANUAL, WHENEVER YOU FIND IT, READ THE FOLLOWING MESSAGE CAREFULLY AND PAY ATTENTION TO THE POSSIBILITY OF PERSONAL ACCIDENTS.

ATTENTION

Carefully read the instructions manual to learn about the recommended safety practices.

ATTENTION

Only start to operate the tractor when you are properly seated and with the seat belt locked.

ATTENTION

Do not transport people or equipment on the tractor.

ATTENTION

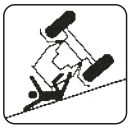

There are risks of severe injuries due to tipping when working in sloped terrains. Do not over speed.

ATTENTION

Do not work with the tractor if the front has insufficient ballast to the rear equipment. Should there be a trend to lift, add weights or ballasts to the front or the front wheels.

ATTENTION

Before performing any maintenance in your equipment, make sure it is properly stopped. Avoid being run over.

ATTENTION

Be careful when handling the GCRTIS support leg, as there is a risk of accidents.

▪ Safety Rules

ATTENTION

FOLLOW ALL RECOMMENDATIONS, WARNINGS AND SAFE PRACTICES RECOMMENDED IN THIS MANUAL, UNDERSTAND THE IMPORTANCE OF YOUR SAFETY. ACCIDENTS MAY LEAD TO DISABILITY OR INCLUDING DEATH. REMEMBER, ACCIDENTS CAN BE AVOIDED!

ATTENTION

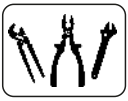

Do not make adjustments with the GCRTIS in operation. When doing any service on the GCRTIS, turn off the tractor first. Use appropriate tools.

ATTENTION

When looking for possible leaks in hoses, use a cardboard or wood, never use your hands. Avoid fluid incision into the skin.

ATTENTION

When transporting the GCRTIS, do not exceed the speed of 25Km/h or 15 MPH, avoiding risks of damages and accidents.

ATTENTION

When working with the GCRTIS, do not exceed the speed of 7 Km/h or 4 MPH, avoiding risk of damages and accidents.

ATTENTION

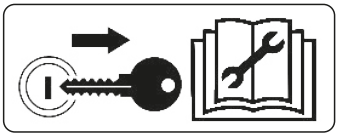

Remove the ignition key before performing any maintenance on the GCRTIS. Protect yourself from possible injury or death caused by an unforeseen GCRTIS start up. If the GCRTIS is not properly engaged, do not start the tractor.

ATTENTION

Hydraulic oil works under pressure and may cause serious injuries if there are any leakages.

Periodically check hoses for conservation. If there are any sign of leakage, replace them immediately. Before connecting or disconnecting hydraulic hoses, relief system pressure by activating the command with the tractor power switched off.

Safety Rules

ATTENTION

Always maintain places of access and work free of residues such as oil or grease to prevent accidents.

ATTENTION

Before commencing work or transportation to GCRTIS, check for any nearby persons or obstructions.

ATTENTION

Avoid heating parts near the fluid lines.
Heating may generatee fragility in the material, rupture and exit of the pressurized fluid, causing burns and injuries

ATTENTION

Keep the joint area free while the GCRTIS is in operation.
In closed curves, prevent tractor wheels from touching the head.

ATTENTION

Never weld the tire--mounted wheel, the heat may cause increased air pressure and cause the tire to burst.
When filling the tire, position yourself besides the tire, never in front of it. To inflate a tire, always use a containment device (inflation cage).

ATTENTION

Always stay away from the active elements of the GCRTIS (discs), they are sharp and can cause accidents.
When performing any service in the discs, wear safety gloves.

ATTENTION

Disposing of waste improperly affects the environment and the environment, as it will pollute rivers, canals or the soil. Inform yourself about the proper way of recycling or disposing residues.

PROTECT THE ENVIRONMENT!

▪ Safety Rules

• PPE Equipment

ATTENTION | **DO NOT WORK WITH THE GCRTIS WITHOUT WEARING PPE (SAFETY EQUIPMENT). IGNORING THIS WARNING MAY CAUSE DAMAGES TO HEALTH, SEVERE ACCIDENTS OR DEATH.**

When performing certain procedures with the **GCRTIS**, wear the following Safety Equipment (PPE):

IMPORTANT

Safety practice must be performed in all stages of working with the GCRTIS, thus avoiding accidents such as impact of objects, fall, noise, cuts and ergonomics, in other words, the person responsible for operating the GCRTIS is subject to internal and external bodily damage.

OBSERVATION | **All PPEs (Safety Equipment) should have certificate of authenticity.**

▪ Warnings

⚠ When operating with the GCRTIS, do not let people stay close or on it.

⚠ When performing any maintenance service, use PPEs equipment.

⚠ Before connecting or disconnecting hydraulic hoses, relief the system pressure by activating the command with the tractor power switched off.

⚠ Periodically check the conservation status of the hydraulic hoses. If there are indications of oil leakage, replace the hose immediately, because the oil works under high pressure and may cause serious accidents.

⚠ Do not wear loose clothing, as they may get caught in the GCRTIS.

⚠ When operating the tractor engine, be properly seated in the operator's seat and be aware of the full knowledge of the correct and safe handling of both the tractor and the GCRTIS. Always put the gear shift in neutral position, unplug the power take-off gear switch and place the hydraulic controls in neutral position.

⚠ Do not start the motor in a closed environment or with no proper ventilation since the exhaust gases are harmful to health.

⚠ When maneuvering the tractor to the GCRTIS hitch, make sure you have adequate clearance and that there are no people too close, always maneuver at idle and be prepared to brake in an emergency.

⚠ Do not make adjustments with the GCRTIS in operation.

⚠ When working in sloped terrains, proceed with precautions, always trying to maintain the required stability. In case of imbalance, reduce acceleration, turn the wheels to the slope side of the terrain and never lift the GCRTIS.

⚠ Always conduct the tractor in speeds compatible to the safety, especially during works in bumpy lands or slopes, keep the tractor always engaged.

⚠ When driving the tractor in highways, keep the brake pedals interconnected.

⚠ Do not work with the tractor with light rear. If the rear has a tendency to lift, add more weights on the rear wheels.

⚠ When leaving the tractor, put the gear lever in neutral position and apply the parking brake. Never leave the GCRTIS on the tractor in the raised position of the hydraulic system.

⚠ The GCRTIS must be turned off before any maintenance work.

⚠ Do not travel on highways especially at night. Use warning signs throughout the course

⚠ If you need to travel with the GCRTIS on highways, consult traffic authorities.

▪ Warnings

⚠ The GCRTIS must not be operated by untrained people, i.e. people who do not know to properly operate it.

⚠ Do not transport or work with the GCRTIS near obstacles, rivers or streams.

⚠ The transportation of people on self-propelled machines and implements is forbidden.

⚠ Changes to the original GCRTIS characteristics are not allowed, as they may alter the safety, operation and life of the GCRTIS.

⚠ Read all safety information contained in this manual and the GCRTIS carefully.

⚠ Read or explain all the procedures of this manual to the operator who cannot read.

⚠ Always check that the GCRTIS is in perfect conditions of use. In the event of any irregularity that may interfere with the operation of the GCRTIS, ensure proper maintenance before any work or transportation.

⚠ Maintenance and especially inspection in GCRTIS risk areas should be done only by a qualified or qualified worker, observing all safety guidelines. Before starting maintenance, disconnect all GCRTIS drive systems.

⚠ Periodically check all components of the GCRTIS before using it.

⚠ Due to the equipment used and work conditions on field or in maintenance areas, precautions are required. Baldan has no direct control over precautions, so it is the owner's responsibility to implement safety procedures while working with GCRTIS.

⚠ Check the recommended minimum tractor power for each GCRTIS model. Only use tractor with power and ballast compatible with the load and topography of the terrain.

⚠ When transporting the GCRTIS, travel at speeds compatible with the terrain and never exceed 16 km/h, as this reduces maintenance and consequently increases the life of the GCRTIS.

⚠ Alcoholic beverage or some medications may cause loss of reflexes and change the operator´s physical conditions. Therefore, never operate this GCRTIS under the influence of these substances.

⚠ Read or explain all the procedures of this manual to the operator who cannot read.

In case of doubts, refer to Post-Sales.
Telephone: 0800-152577 / E-mail: posvenda@baldan.com.br

▪ Components

• **GCRTIS - Tandem Intermediate Remote Control Harrow (Without roller)**

1. Central strut
2. Left-side strut
3. Right-side strut
4. Left front frame
5. Right front frame
6. Left rear frame
7. Right rear frame
8. Coupling head
9. Mechanical jack
10. Hydraulic hose
11. Hose support
12. Stabilizer rod
13. Cylinder
14. Disc
15. Tire
16. Right-side support of wheel axle
17. Central support of wheel axle
18. Left-side support of wheel axle
19. Finishing disc
20. Join regulation bar
21. Fixing bar for transport
22. Articulation cylinder of the sides
23. Right articulation support
24. Left articulation support
25. Articulation cylinder of the wheels

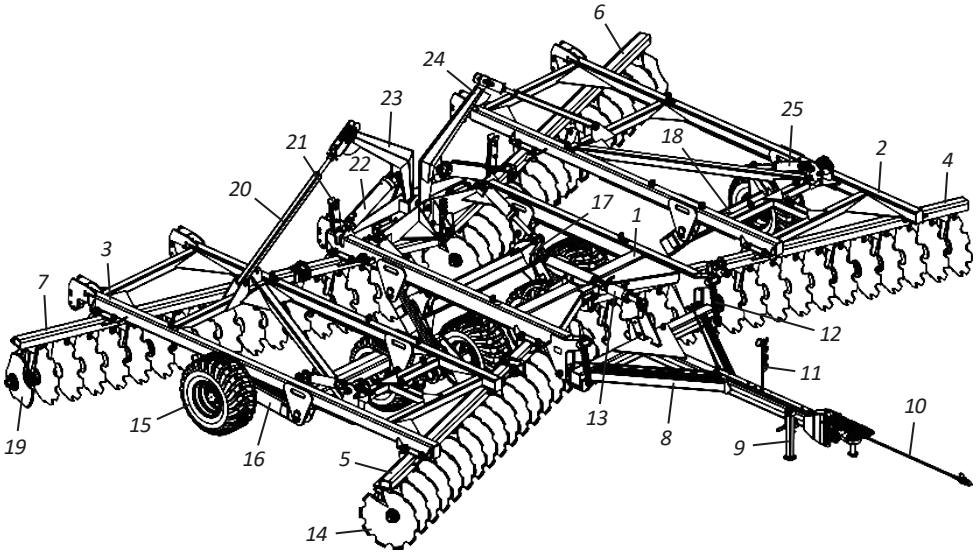

▪ Components

• **GCRTIS - Tandem Intermediate Remote Control Harrow (With roller)**

1. Central strut
2. Left-side strut
3. Right-side strut
4. Left front frame
5. Right front frame
6. Left rear frame
7. Right rear frame
8. Coupling head
9. Mechanical jack
10. Hydraulic hose
11. Hose support
12. Stabilizer rod
13. Cylinder
14. Disc
15. Tire
16. Right-side support of wheel axle
17. Central support of wheel axle
18. Left-side support of wheel axle
19. Finishing disc
20. Join regulation bar
21. Fixing bar for transport
22. Articulation cylinder of the sides
23. Right articulation support
24. Left articulation support
25. Articulation cylinder of the wheels
26. Disking roller

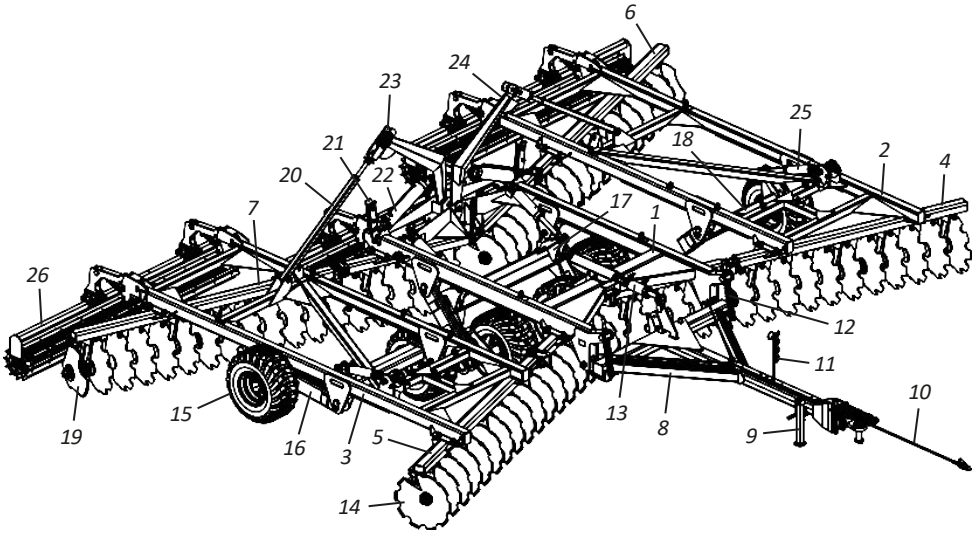

▪ Dimensiones

• GCRTIS 62 / 66 / 70 Discs

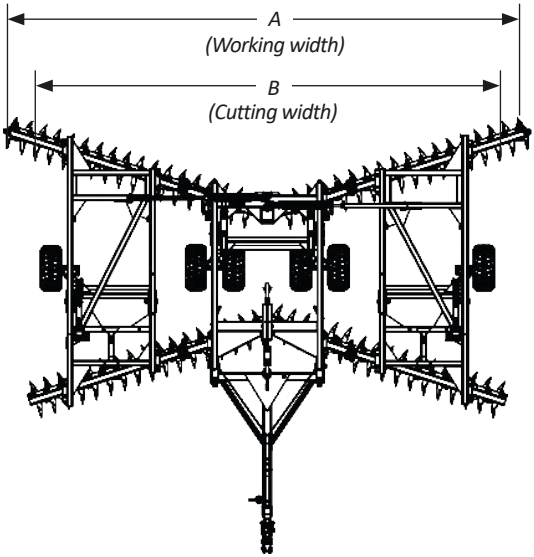

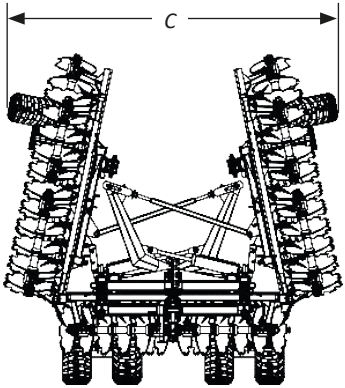

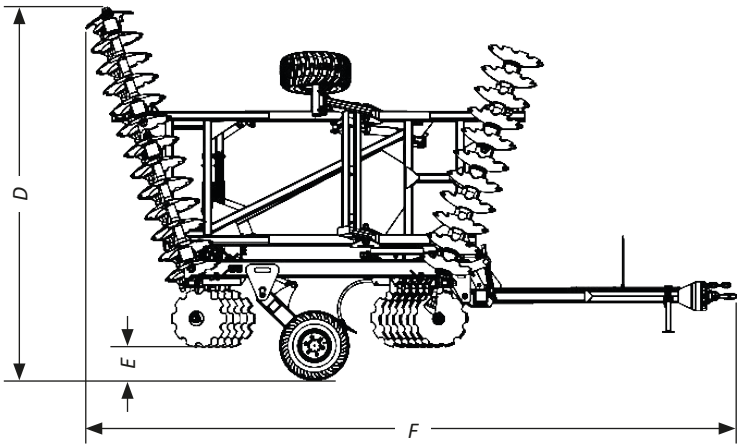

Model	No. of Discs	Measurement A (mm)	Measurement B (mm)	Measurement C (mm)	Measurement D (mm)	Measurement E (mm)	Measurement F (mm)
GCRTIS	62	8510	7700	4750	4040	410	7790
GCRTIS	66	9040	8250	4750	4310	410	7860
GCRTIS	70	9600	8770	4750	4615	410	7950

▪ Specifications

• GCRTIS - Tandem Intermediate Remote Control Harrow

Model	No. of Discs	Discs Spacing (mm)	Working Width (mm)	Disc Diameter (ø)	Axle Diameter (ø)
GCRTIS	62	270	8510	26” - 28”	1.5/8”
	66	270	9040	26” - 28”	1.5/8”
	70	270	9600	26” - 28”	1.5/8”

Model	No. of Discs	Approximate Weight (Kg)				Tractor Power (HP)	Tyres	
		Sem Rolete		Com Rolete				
		26”	28”	26”	28”		Quantity	Model
GCRTIS	62	9362	9565	10365	10568	280 à 320	06	400x60
	66	9727	9944	10730	10947	300 à 335	06	400x60
	70	9832	10063	10809	11040	315 à 340	06	400x60

Working depth ..... 150 - 250 mm
Recommended working maximum speed 7km/h
Recommended transport maximum speed 25km/h

Baldan reserves the right to change and/or perfect the technical characteristics of its products, without previous notice, and without obligation to proceed in the same way with the products previously manufactured. Technical specifications are approximate and informed under normal work conditions.

INTENDED USE OF THE GCRTIS

- The **GCRTIS** was developed for soil preparation work for cereal planting and pasture renewal.
- The **GCRTIS** must be conducted and operated only by a properly instructed operator.

UNAUTHORIZED USE OF THE GCRTIS

- To avoid damages, severe accidents or death, do NOT transport people on other part of **GCRTIS**.
- It is NOT allowed to use **GCRTIS** to couple, tow or push other implements or accessories.
- **GCRTIS** should NOT be used by an experienced operator who does not knows all the driving, command and operation techniques.

▪ Assembly

GCRTIS leaves the factory disassembled. To assembly it, follow the instructions below:

⚠ A montagem da **GCRTIS** deve ser feita pela revenda, através de pessoas treinadas, capacitadas e qualificadas para esse trabalho.

⚠ Antes de iniciar a montagem da **GCRTIS**, procure um local ideal, onde facilite a identificação das peças e a montagem da mesma.

⚠ Não utilize roupas folgadas, pois poderão enroscar-se na **GCRTIS**.

• Assembly of discs section

When starting the **GCRTIS** assembly, always start with the set of disks, for this, proceed as follows:

01 - To the axle (1), attach the concave thrust washer (2), flat washer (3), lock (4), nut (5), attaching it with the pressure washer (6) and the screw (7).

02 - Next, to the axle (1), attach the disc (8), bearing (9), another disc (8), separator reel (10) and so on.

03 - When the set is complete with all discs, bearings, separator reels, attach the convex thrust washer (11), flat washer (12), lock (13), nut (14), tightening with the wrench until the whole set is secured.

04 - After that, chock the set of discs and secure the nut (14) through impacts. When you are about to reach the maximum torque, adjust the lock (13) with the convex washer (11), always tightening the nut until coincide with the boring, attach it with the pressure washer (15) and the screw (16).

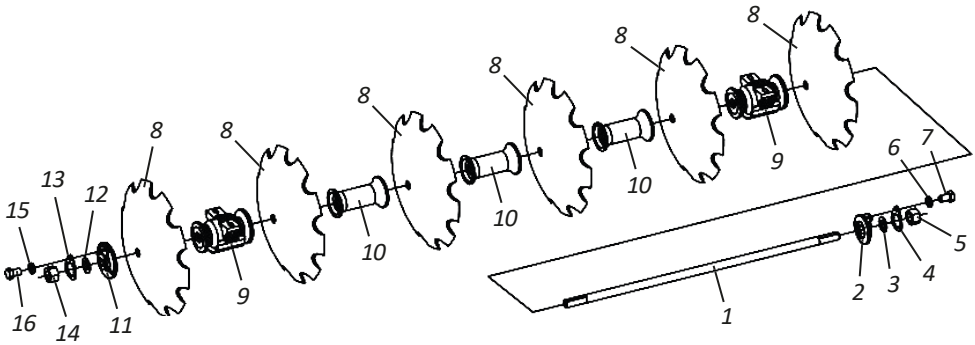

⚠ **ATTENTION** | **Check the right side of the separator reels and bearings, according to the discs concavity.**

▪ Assembly

• Assembly of finishing disc

To assemble the finishing disc, proceed as follows:

01 - To the axle, attach the concave thrust washer (2), flat washer (3), lock (4), nut (5), attaching it with the pressure washer (6) and the screw (7).

02 - Next, to the axle (1), attach the disc (8), bearing (9), another disc (8), separator reel (10) and so on until you attach the bearing (11) and the finishing disc (12).

03 - When the set is complete with all discs, bearings, separator reels, attach the convex thrust washer (13), flat washer (14), lock (15), nut (16), tightening with the wrench until the whole set is secured.

04 - After that, chock the set of discs and secure the nut (16) through impacts. When you are about to reach the maximum torque, adjust the lock (15) with the convex washer (13), always tightening the nut until coincide with the boring, attach it with the pressure washer (17) and the screw (18).

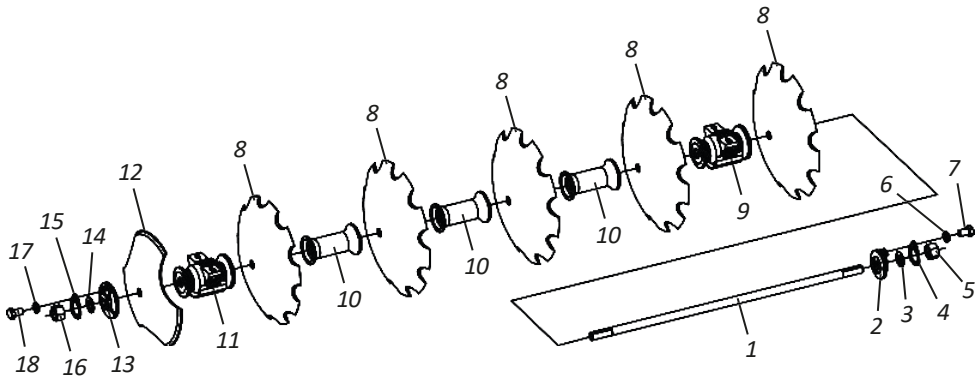

ATTENTION | **Check the right side of the separator reels and bearings, according to the discs concavity.**

Assembly

• Assembly of discs sections - GCRTIS 62 discs

Check the assemblies of disc sections of the **GCRTIS** 62 discs.

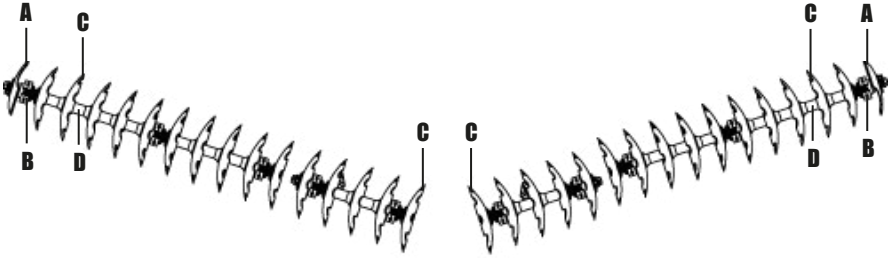

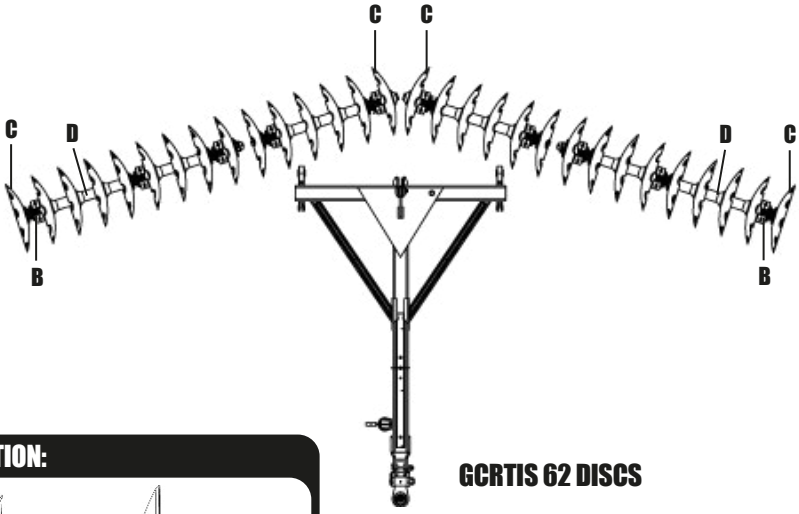

GCRTIS 62 DISCS

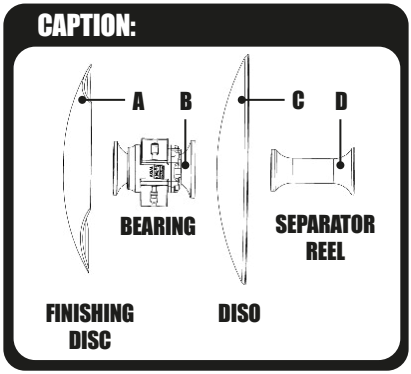

Assembly

• Assembly of discs sections - GCRTIS 66 discs

Check the assemblies of disc sections of the **GCRTIS** 66 discs.

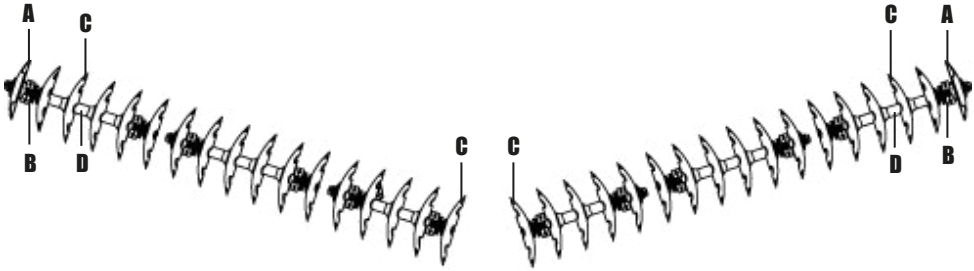

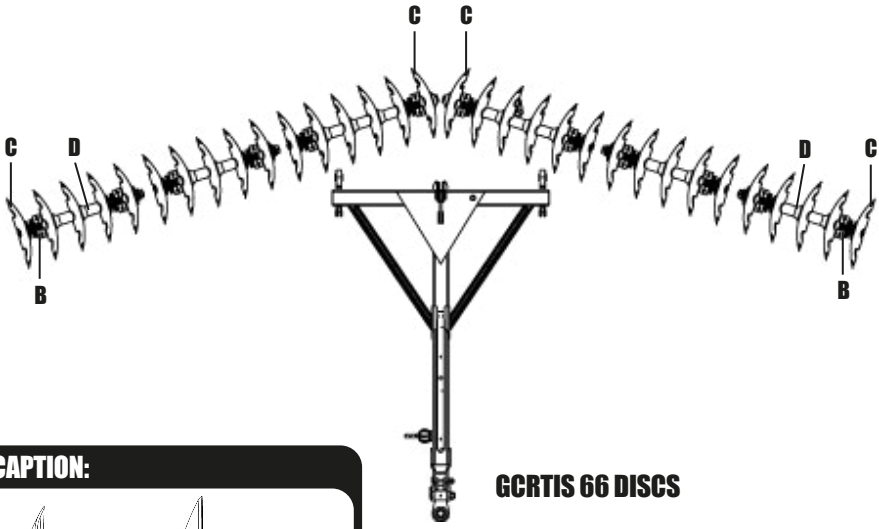

GCRTIS 66 DISCS

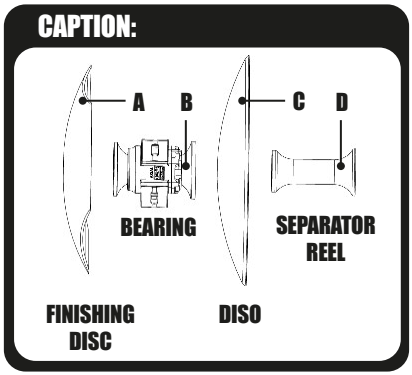

▪ Assembly

• Assembly of discs sections - GCRTIS 70 discs

Check the assemblies of disc sections of the **GCRTIS** 70 discs.

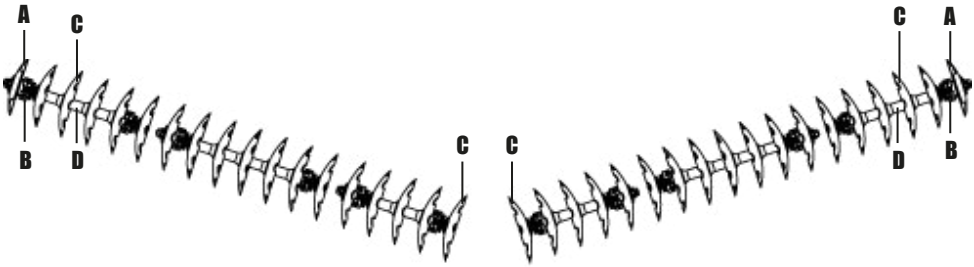

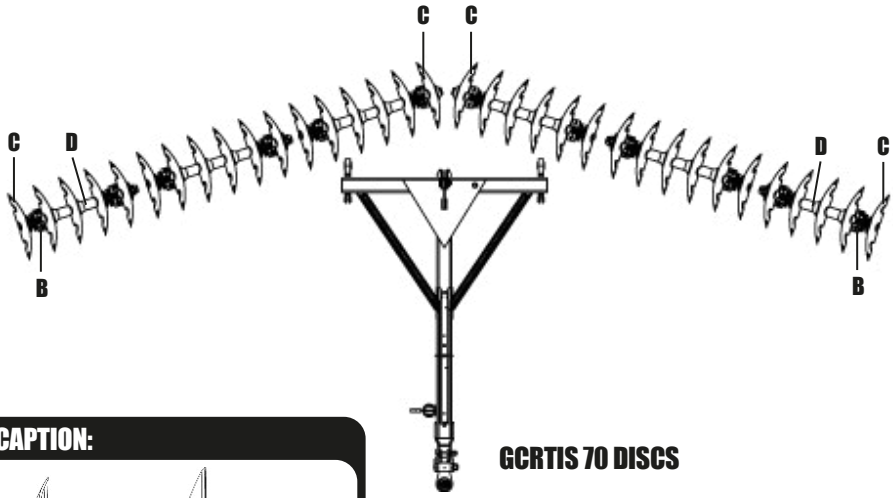

GCRTIS 70 DISCS

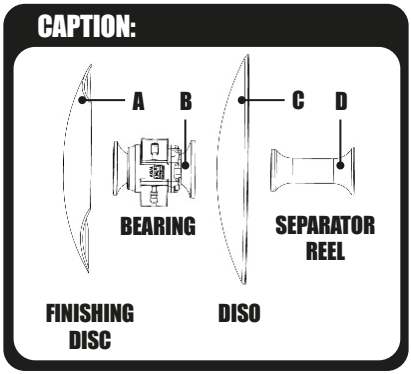

▪ Assembly

• Assembly of central frames in the central strut

Start the **GCRTIS** assembly by the central strut, for this purpose, proceed as follows:

01 - Attach the right (1) and left front frames (2) and the right (3) and left (4) rear frames in a flat and clean place.

02 - Next, attach the central strut (5) over the front and rear frames, attaching the sides of the frames with pins (6), flat washers (7), pressure washers (8) and nuts (9).

03 - After, attach the centers of the front and rear frames to the central strut (5) with screws, pressure washers (11) and nuts (12).

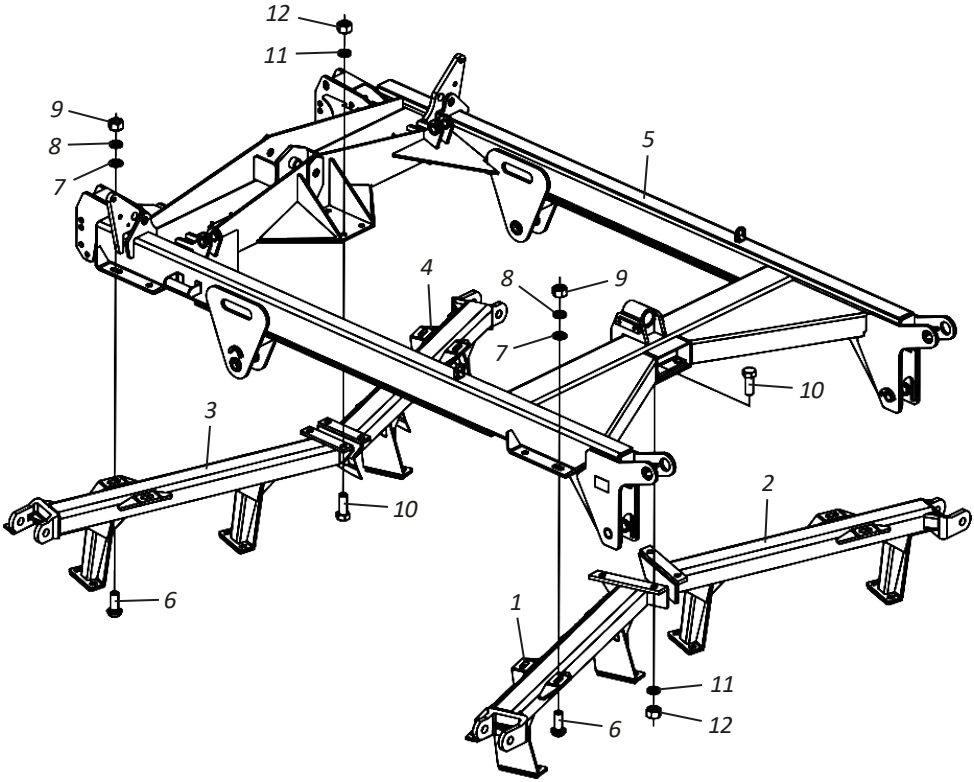

▪ Assembly

• Assembly of discs sections in the frames of the central strut

After attaching to the frames of the central strut, attach the disc sections (1), for this purpose, proceed as follows:

01 - Raise the front or rear part of the frame and attach the disc sections (1) in line and match the footings boring (2) with the borings and attach with screws, flat washers (4) and nuts (5).

02 - After that, raise the other part of the frame and repeat the operation, checking the discs concavity from one section to the other that should be in the opposite side.

03 - When finishing the assembly, check if the footings (2) are turned to the discs concavity.

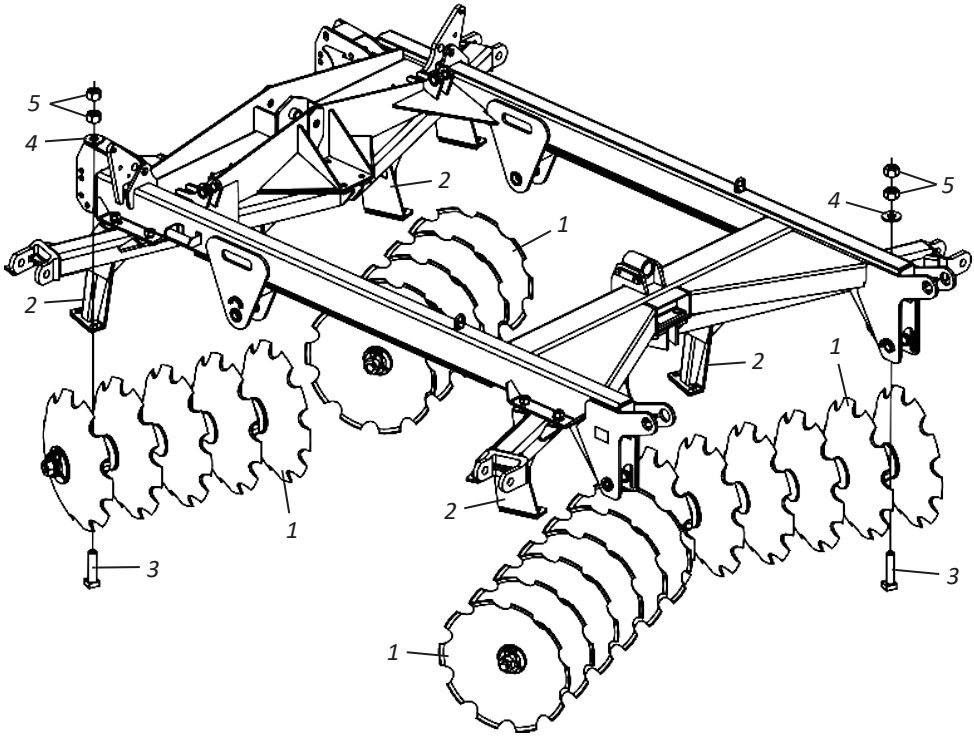

ATTENTION | **When assembling the discs sections in the frames, note that the frames footings should be turned to the concavity of the discs.**

▪ Assembly

• Assembly of side frames in the side strut

Following, assemble the left side strut, for this purpose, proceed as follows:

01 - Attach the front side (1) and rear side (2) frames in a flat and clean place.

02 - Next, attach the left side strut (3) over the front and rear side frames, attaching them with pins (4), locks (5), pressure washers (6) and nuts (7).

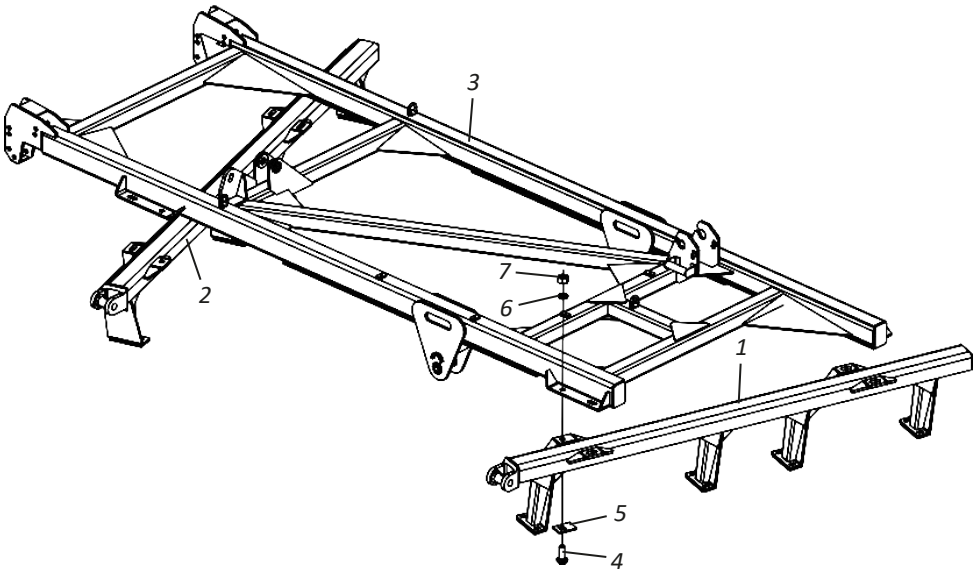

NOTE | **Repeat the procedure above to assemble the right side strut in the side frames.**

▪ Assembly

• Assembly of discs sections in the side frames of left side strut

After attaching the side frames to the side strut, attach the disc sections (1), for this purpose, proceed as follows:

01 - Raise the front or rear part of the frame and attach the disc sections (1) in line and match the footings boring (2) with the borings and attach with screws, flat washers (4) and nuts (5).

02 - After that, raise the other part of the frame and repeat the operation, checking the discs concavity from one section to the other that should be in the opposite side.

03 - When finishing the assembly, check if the footings (2) are turned to the discs concavity.

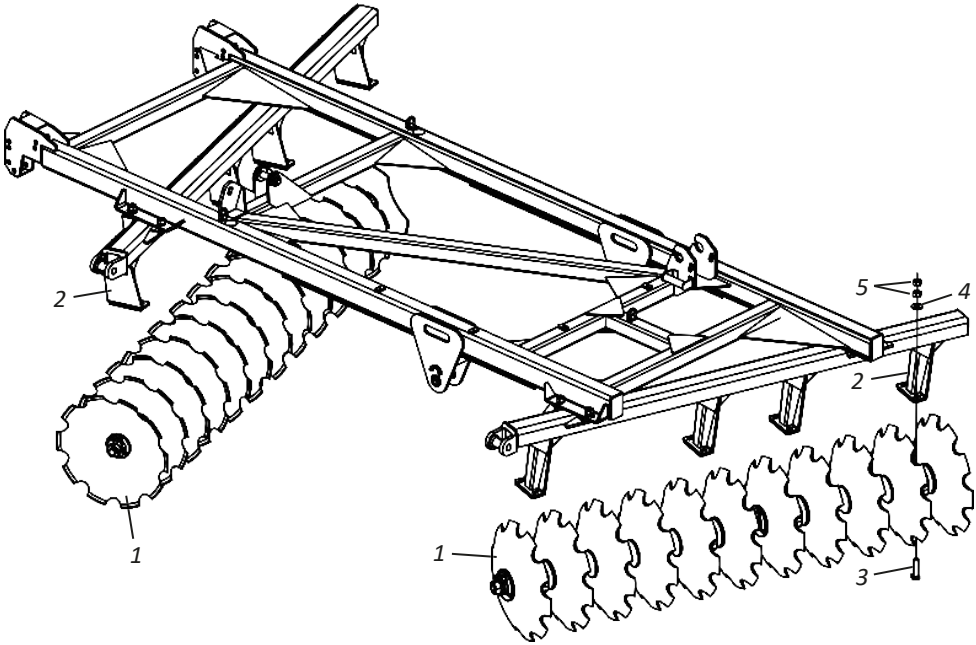

ATTENTION | **When assembling the discs sections in the frames, note that the frames footings should be turned to the concavity of the discs.**

NOTE | **Repeat the procedure above to assemble the discs sections in the side frames of right side strut.**

▪ Assembly

• Assembly of scrapers

After attaching the frames of the discs sections, attach the scrapers (1), for this purpose, proceed as follows:

01 - Attach the scrapers (1) to the frames, securing them with screws (3), plain washers (7), pressure washers (5), and nuts (6).

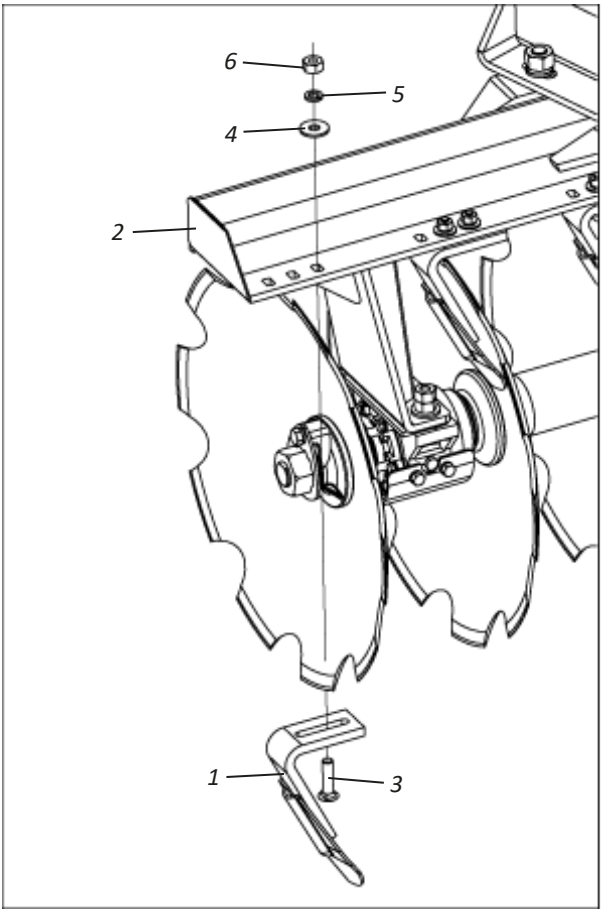

ATTENTION **When assembling the scrapers, they shall be 0.5 to 1.0 cm away from the discs.**

▪ Assembly

• Assembly of left side frames in the central frames

To attach the left side frames (1) to the central frames (2), proceed as follows:

01 - Attach the left side frames to the central frames (2), attaching them with pins (3) and nuts (4), locking with screws (5) **as shown in details "A" and "B".**

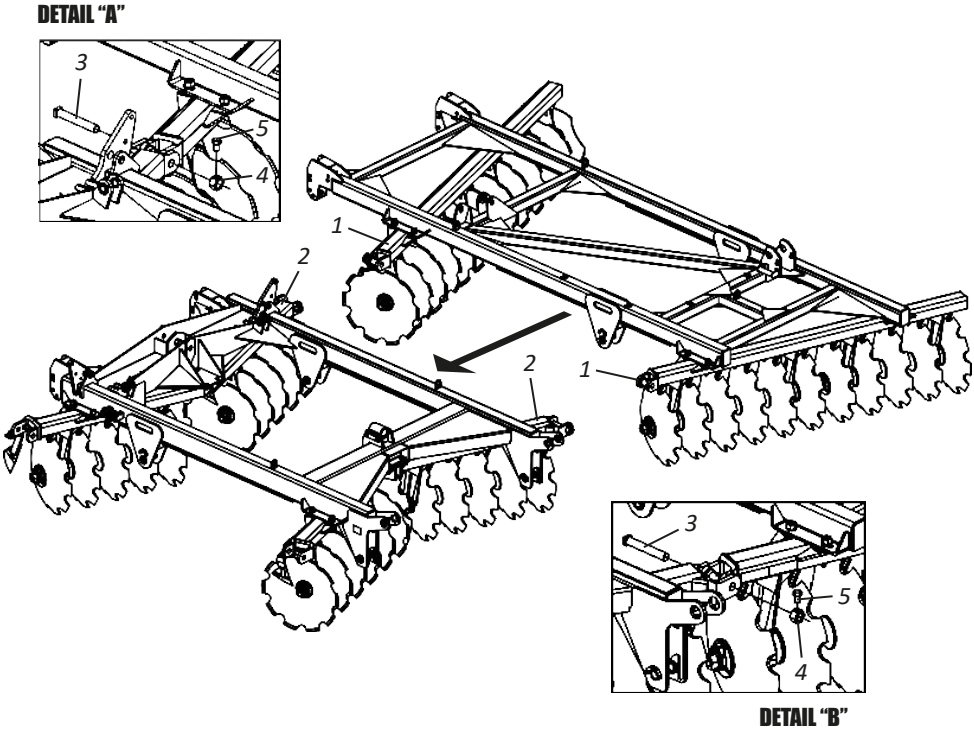

NOTE | **Repeat the above procedure for mounting the right side frames on the center frames.**

▪ Assembly

• Assembly of central support of the wheel axle

In order to assemble the central support of the wheel axle (1), proceed as follows:

01 - Attach the wheel axles (2) in the wheel axle support (1), securing them with screws (3), pressure washers (4) and nuts (5).

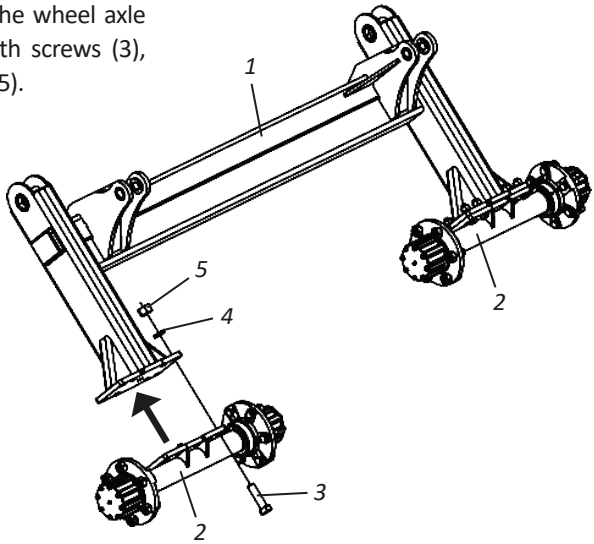

• Assembly of the right side support of the wheel axle

In order to assemble the right side support of the wheel axle (1), proceed as follows:

01 - Attach the wheel axle (2) in the right side support of the wheel (1), securing them with screws (3), pressure washers (4) and nuts (5).

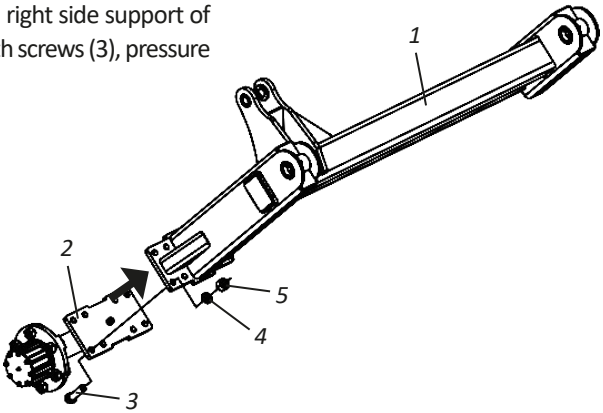

NOTE | **Repeat the above procedure for mounting the left side bracket on the wheel axle.**

▪ Assembly

• Assembly of the right side support of the wheel axle in the right side strut

After assembling the central and side supports, attach the right side support of the wheel axle (1) in the right side strut, for this purpose, proceed as follow:

01 - Attach the right support of the wheel axle (1) in the strut (2), securing them with pins, flat washers (4) and nuts (5).

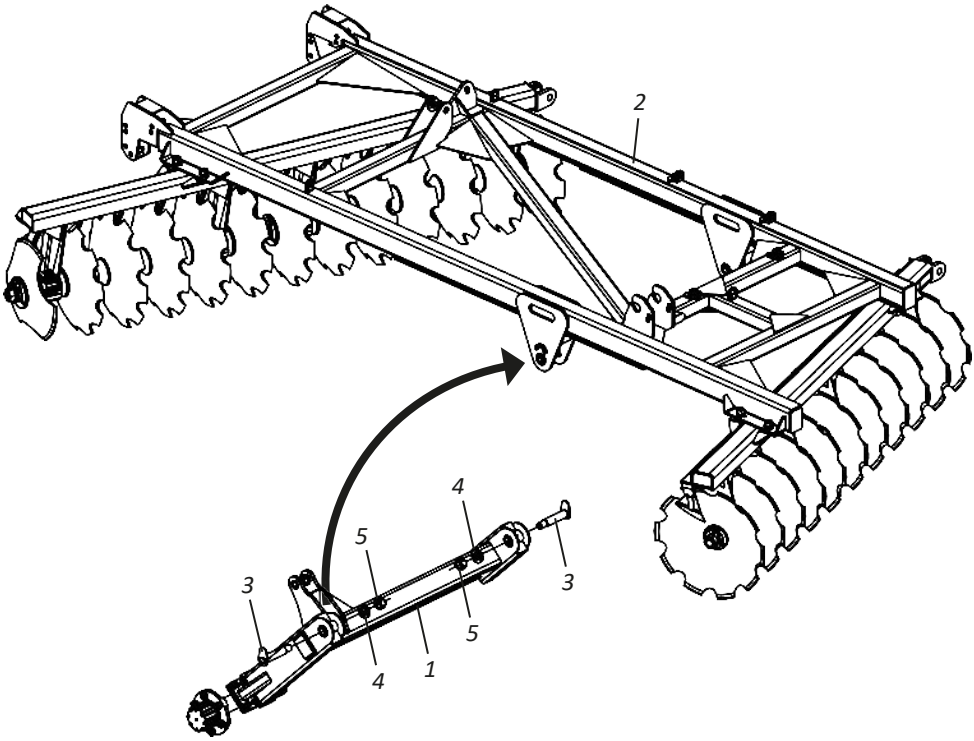

NOTE | **Repeat the procedure above to assemble the left side support of the wheel axle.**

▪ Assembly

• Assembly of the central support of the wheel axle in the central strut

In order to assemble the central support of the wheel axle (1) in the central strut (2), proceed as follows:

01 - Attach the central support of the wheel axle (1) in the central strut (2), securing them with pins (3), flat washers (4) and nuts (5).

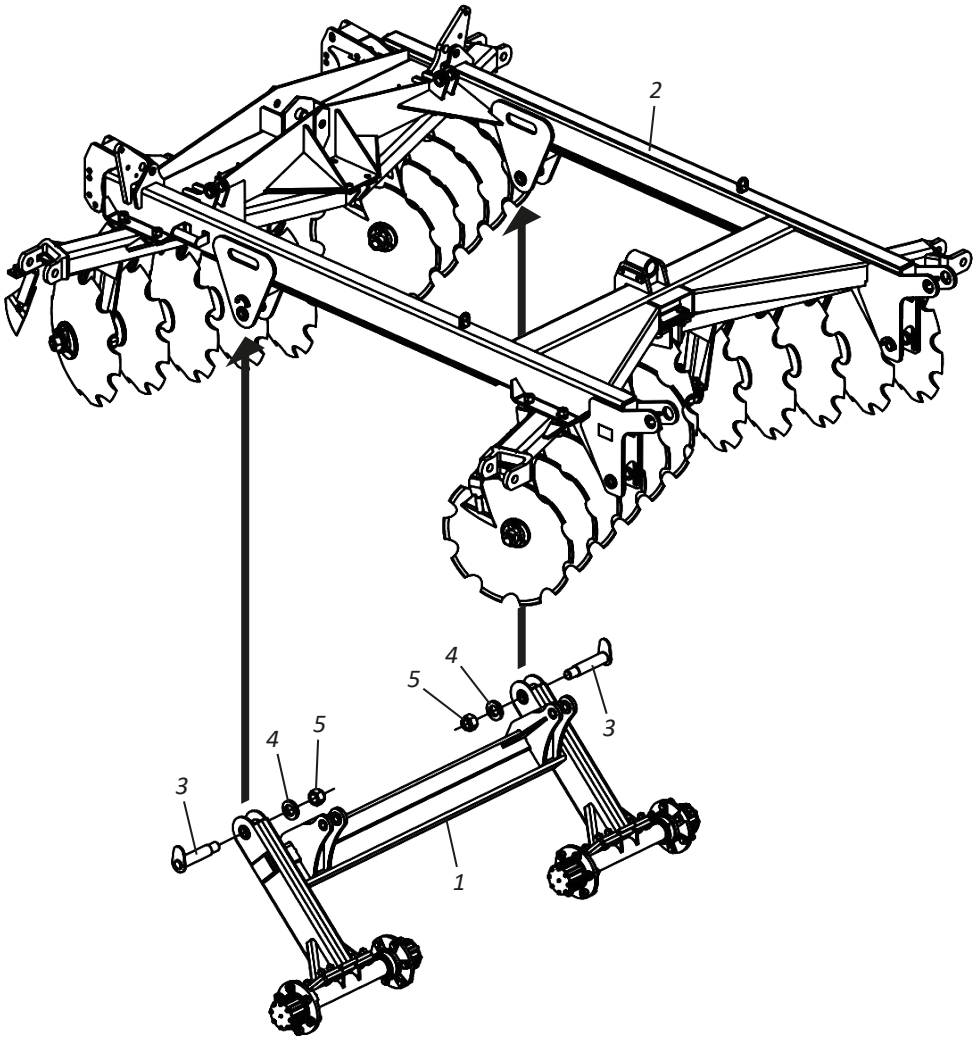

▪ Assembly

• Assembly of tires

After assembling the supports of the wheel axle, attach the tires (1), for this purpose, proceed as follow:

01 - Attach the tires (1) in the wheel axle support (2) with screws (3) and nuts (4).

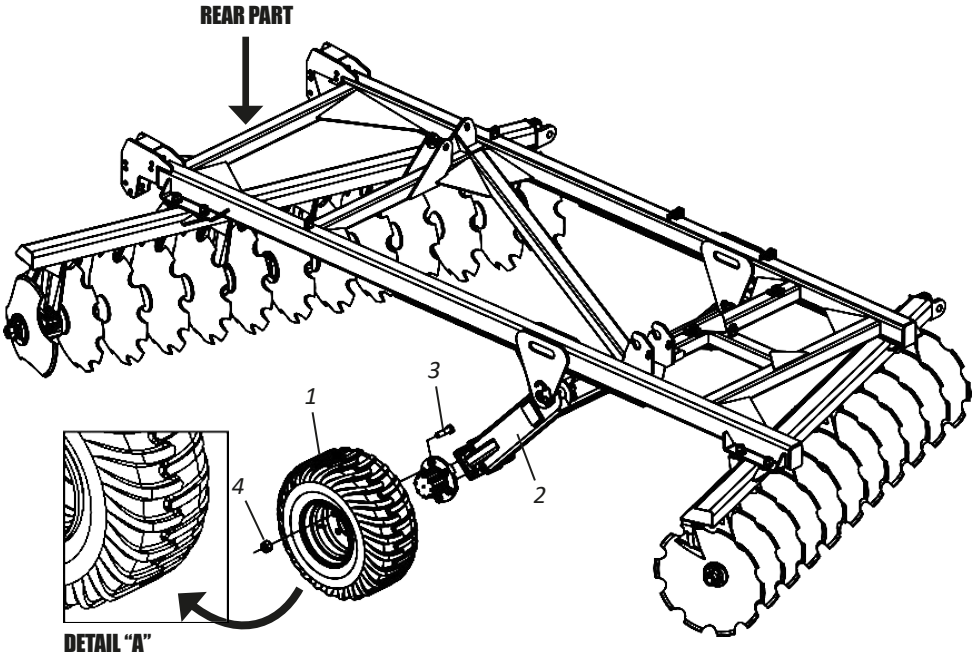

ATTENTION | **All tires shall be assembled anti-tractioned, that is, with the claws facing forward of the GCRTIS, as shown in detail "A".**

▪ Assembly

• Assembly of the coupling head

To assemble the coupling head, proceed as follows:

01 - Attach the coupling head (1) in the strut (2) with pins (3), flat washers (4) and nuts (5).

02 - Next, release the central support (6) in the coupling head (1) with screw (7), pressure washer (8) and nut (9).

03 - Following, assemble the rod (10) attaching the nut (11), spring washer (12), spring (13), spring washer (14), guide (15), rod lock (16) and nuts (17).

04 - End attaching the rod (10) assembled in the coupling head (1) with pin (18), flat washer (19) and cotter pin (20).

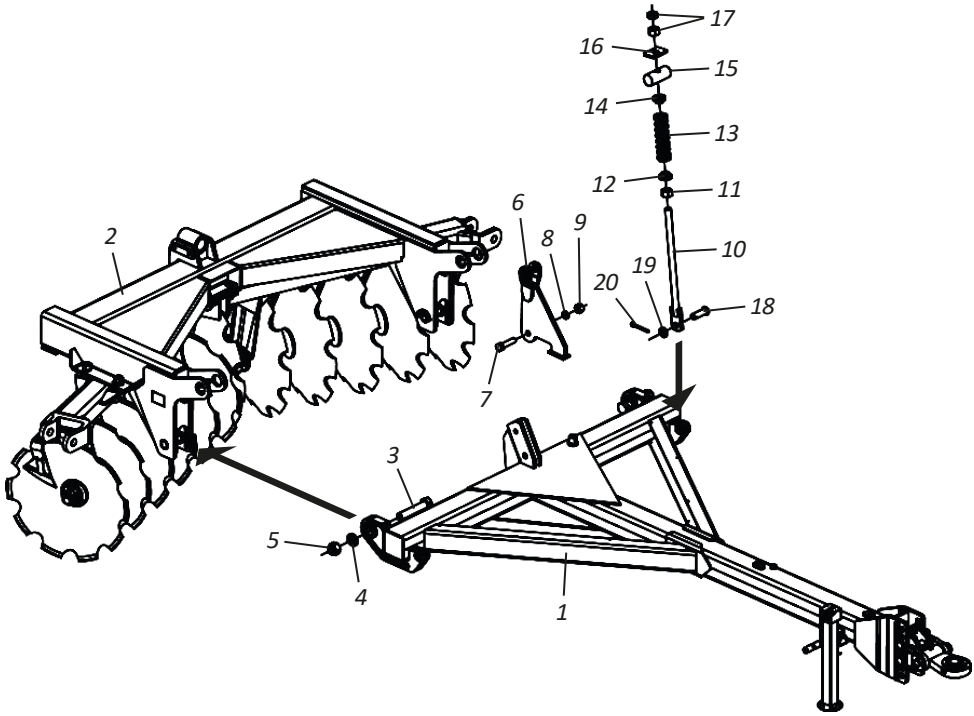

▪ Assembly

• Assembly of the hydraulic cylinder in the coupling head

To assemble the hydraulic cylinder in the coupling head, proceed as follows:

01 - Put the rod (1), nut (2), spring washer (3), spring (4), spring washer (5), pass the rod (1) inside the bushing (6) and, in the rod (1), continue to put the spring washer (7), spring (8), spring washer (9) and nuts (10).

02 - Next, attach the hydraulic cylinder base (11) to the rod (1) with screw (12) and nut (13).

03 - Following, attach the hydraulic cylinder shaft (11) to the central support (14) with pin (15), flat washer (16) and cotter pin (17).

04 - End attaching the spring protection (18) with flat washer (19), pressure washers (20) and screws (21).

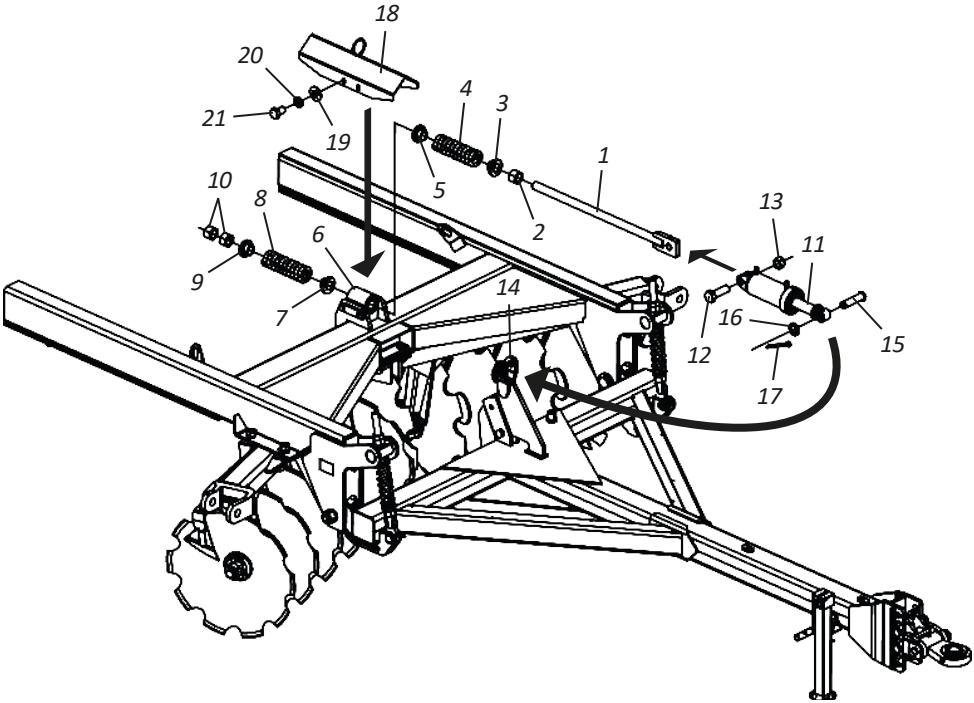

▪ Assembly

• Assembly of the hydraulic cylinders in the central support of the wheel axle

In order to assemble the hydraulic cylinders in the central support of the wheel axle, proceed as follows:

01 - Attach the hydraulic cylinders base (1) to the strut (2), securing them with pin (3), flat washer (4) and cotter pin (5).

02 - Following, attach the hydraulic cylinders shaft (1) to central support of the wheel axle (6), securing them with pin (7), flat washers (8) and cotter pin (9).

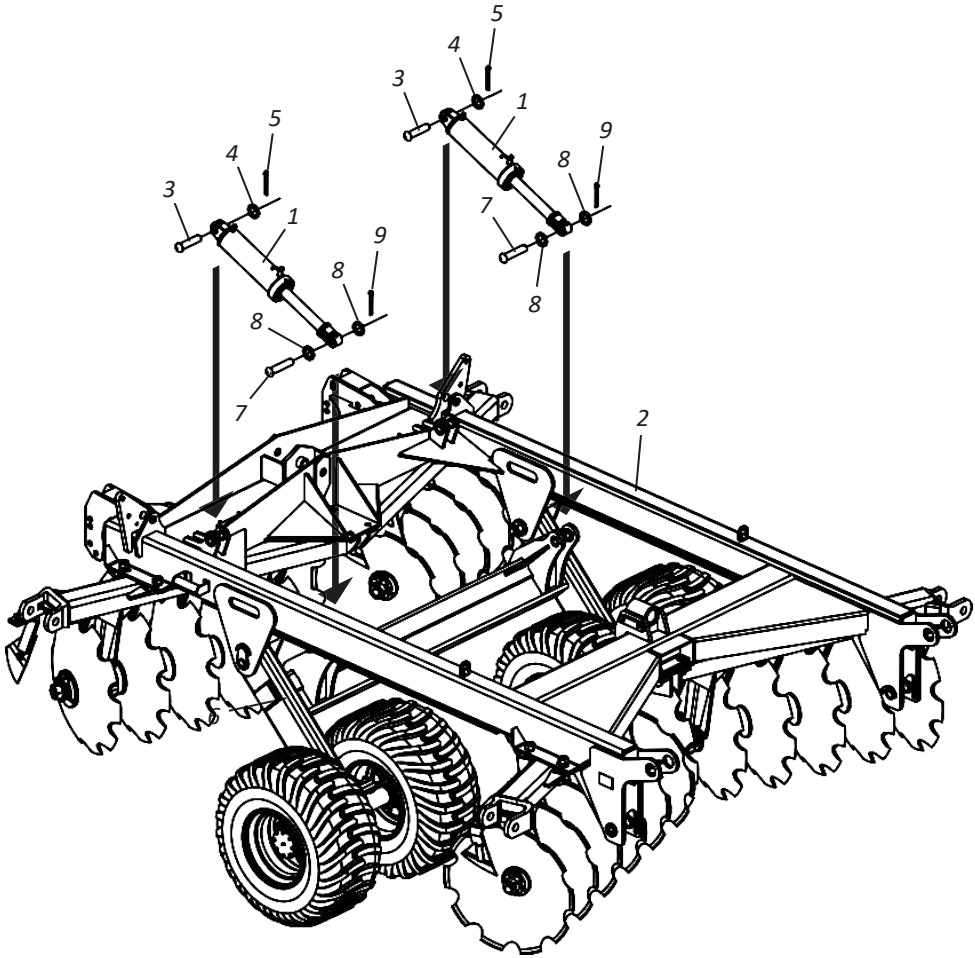

▪ Assembly

• Assembly of the hydraulic cylinder in the right side support of the wheel axle

In order to assemble the hydraulic cylinder in the right side support of the wheel axle, proceed as follows:

01 - Attach the cylinder articulation support (1) to the strut (2), securing them with bushings and nuts (4). Then, lock the cylinder articulation support (1) with screws (5), plain washers (6), bushings (7) and nuts (8).

02 - Next, attach the nuts (9) to the rod (10) and put it in the cylinder articulation support (1), securing it with nut (11).

03 - Following, attach the hydraulic cylinder base (12) to the rod (10) with pin (13), flat washer (14) and cotter pin (15).

04 - End attaching the hydraulic cylinder shaft (12) to the right side support of the wheel axle (16) with pin (17), flat washer (18) and cotter pin (19).

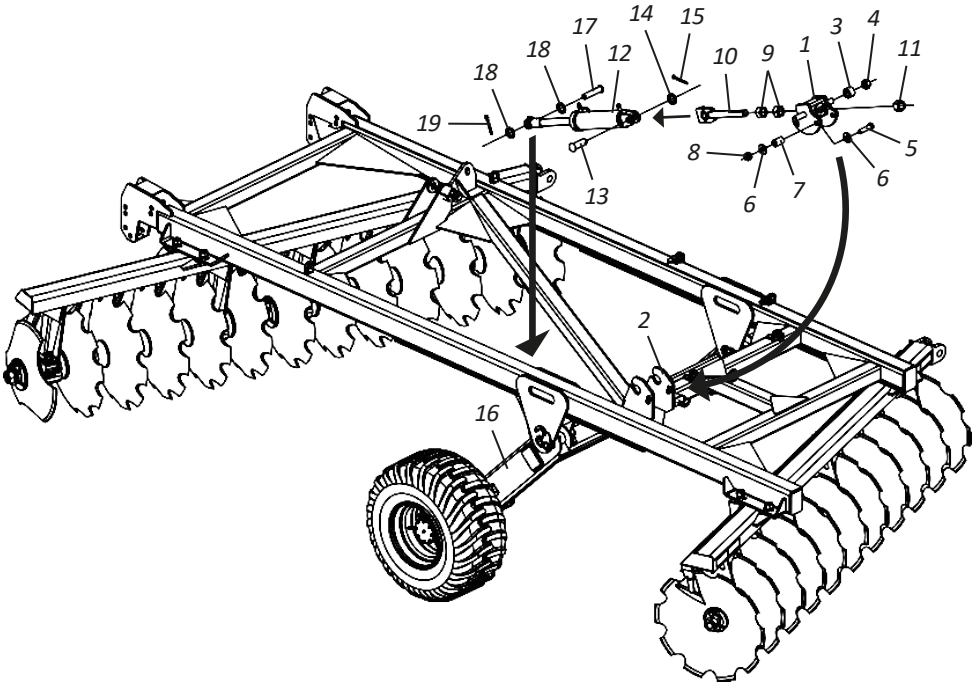

NOTE | **Repeat the procedure above to assemble the hydraulic cylinder in the left side support of the wheel axle.**

▪ Assembly

• Assembly of the frames articulation supports

In order to assemble the frames articulation supports (1), proceed as follows:

01 - Attach the frames articulation supports (1) to the strut (2) with screw (3), pressure washer (4) and nut (5), locking it with the screw (6).

02 - Following, attach the hydraulic cylinders bases (7) to the strut (2) with pins (8), pressure washers (9) and screws (10) and attach the hydraulic cylinders shafts (7) to the frames articulation supports (1) with pins (11), pressure washer (12) and nuts (13).

03 - End attaching the union bars (14) to the strut (2) with screws (15), flat washers (16), pressure washers (17) and nuts (18).

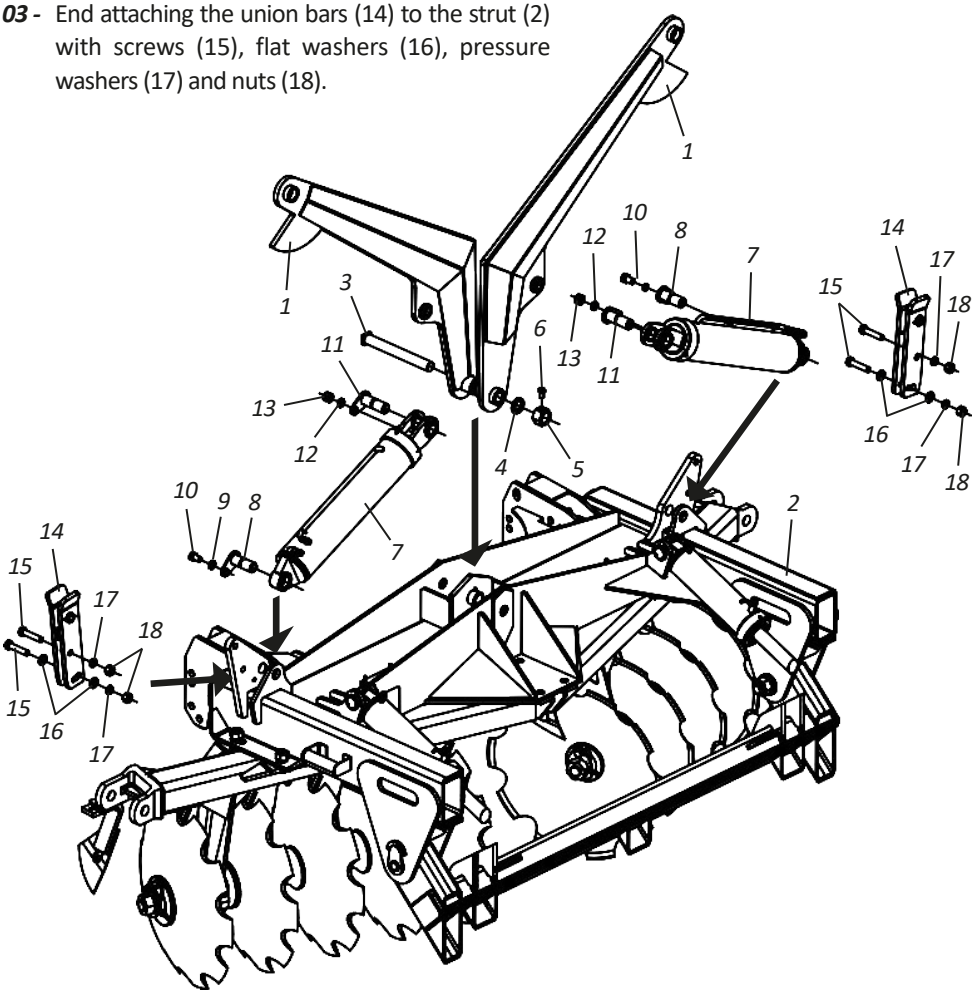

▪ Assembly

• Assembly of the frames adjusters

In order to assemble the frames adjusters (1), proceed as follows:

01 - Attach the frame adjuster base (1) to the side strut (2) with pin (3), flat washer (4) and cotter pin (5).

02 - Following, attach the frame adjuster shaft (1) to frame articulation support (6) with pin (7), flat washers (8) and cotter pin (9).

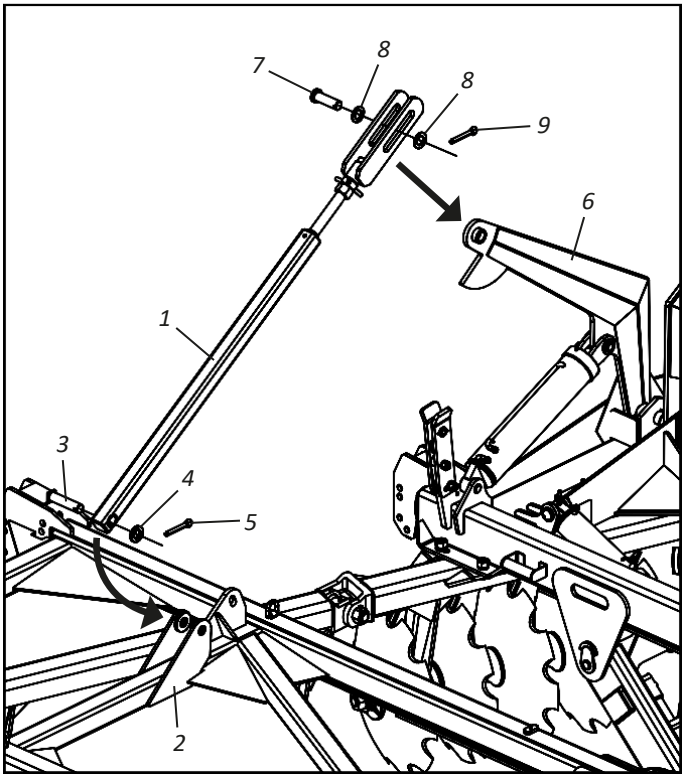

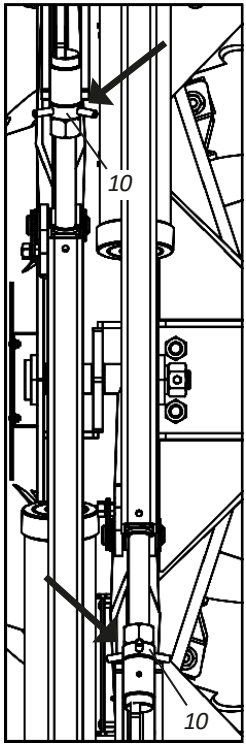

DETAIL "A"

ATTENTION **When assembling the frames adjusters (1), put the bushings pins (10) one in opposition the other (as shown in detail "A") so they do not touch each other when articulating the GCRTIS.**

NOTE **Repeat the procedure above to assemble the frame adjuster in the left side strut.**

▪ Assembly

• Assembly of the central shaft

In order to assemble the central shaft (1), proceed as follows:

01 - In order to assemble the central shaft (1), proceed as follows:

02 - Attach the shaft (1) to the support (2) with screw (3), pressure washer (4) and nut (5). Following, attach the screw (6), pressure washer (7), and nut (8).

03 - Next, attach the nozzle (9) to the shaft (1) with screws (10), pressure washers (11) and nuts (12).

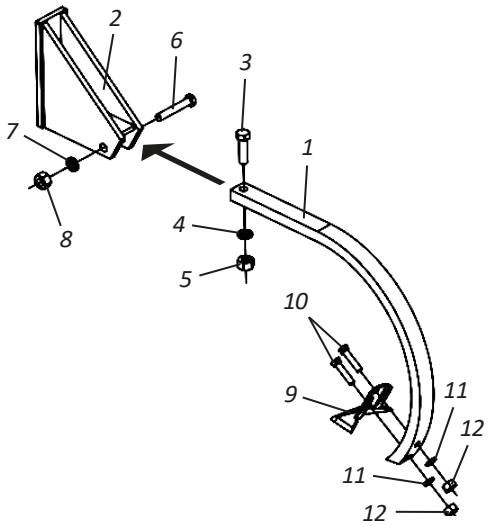

• Assembly of central shaft in the central strut

In order to assemble the central shaft (1), proceed as follows:

01 - Attach the shaft (1) to the central strut (2) with screws (3) and nuts (4).

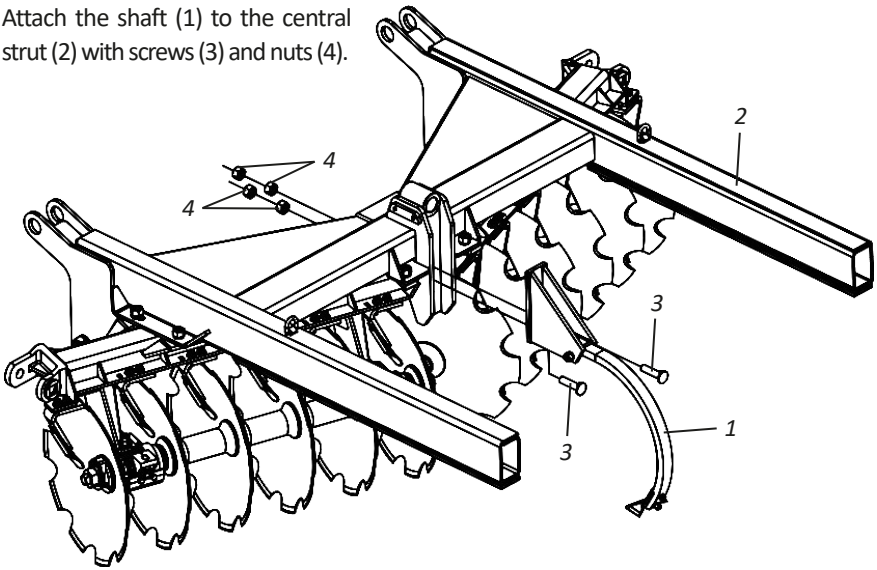

▪ Assembly

• Assembly of the signaling plate

In order to assemble the signaling plate (1) in the central strut, proceed as follows:

01 - Attach the signaling plate (1) to the central strut (2), with screws (3), plain washers, pressure washers (5), and nuts (6).

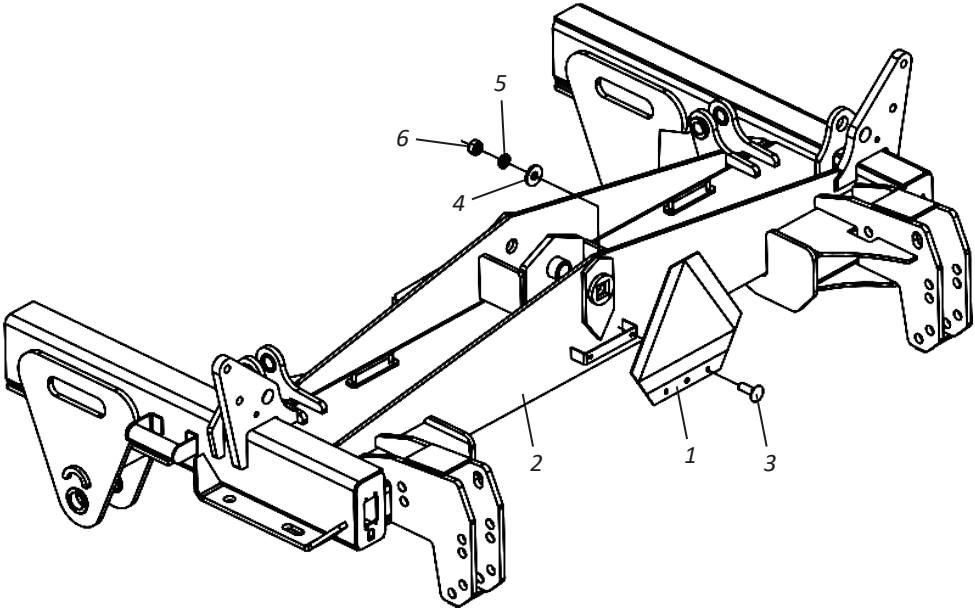

ATTENTION | **DO NOT work or transport GCRTIS, especially on roads, without the signaling plate.**

▪ Assembly

• Assembly the cutting rollers (Optional)

To assemble the cutting rollers on the uprights, proceed as follows:

01 - Couple the brackets (1) in the upright (2) fixing through the pins (3), flat washers (4), cotter pins (5).

02 - Then, fix the intermediate supports (6) on the removing roller (7) using the screws (8), lock washers (9) and nuts (10).

03 - Then, attach the supports (1) to the intermediate supports (6) fixing through pins (11), flat washers (12), nuts (13) and cotter pins (14).

04 - Then, place the pins (15) on the supports (1) locking them through the flat washers (16) and cotters (17).

05 - Then, fix the forks (18) to the pins (15) through the nuts and locknuts (19); couple one end of the springs (20) to the forks (18) through the pins (21), nuts (22) and cotter pins (23) and the other end of the springs (20) to the upright (2) fixing through the pins (24) , plain washers (25) and cotter pins (26).

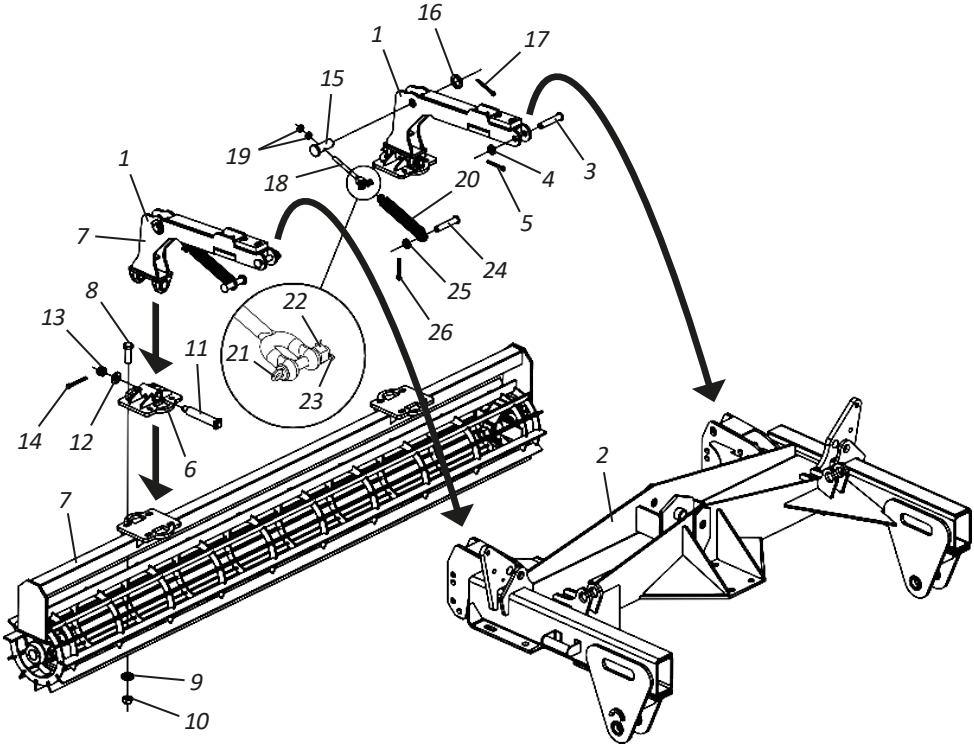

▪ Assembly

• Assembly of electrical system

In order to assemble the signaling plate (1) in the central strut, proceed as follows:

01 - Attach the cable (1) in the cable (2). Then put the central protection (3) over the cables (1 and 2), attaching it on the head (4) with screws (5) and plain washer (6).

02 - Then put the protections (7) over the cables (2), attaching them on the head (4) with screws (8), pressure washer (9) and nuts (10).

03 - Following, attach the hose support (11) and nut (12) on the central protection (3).

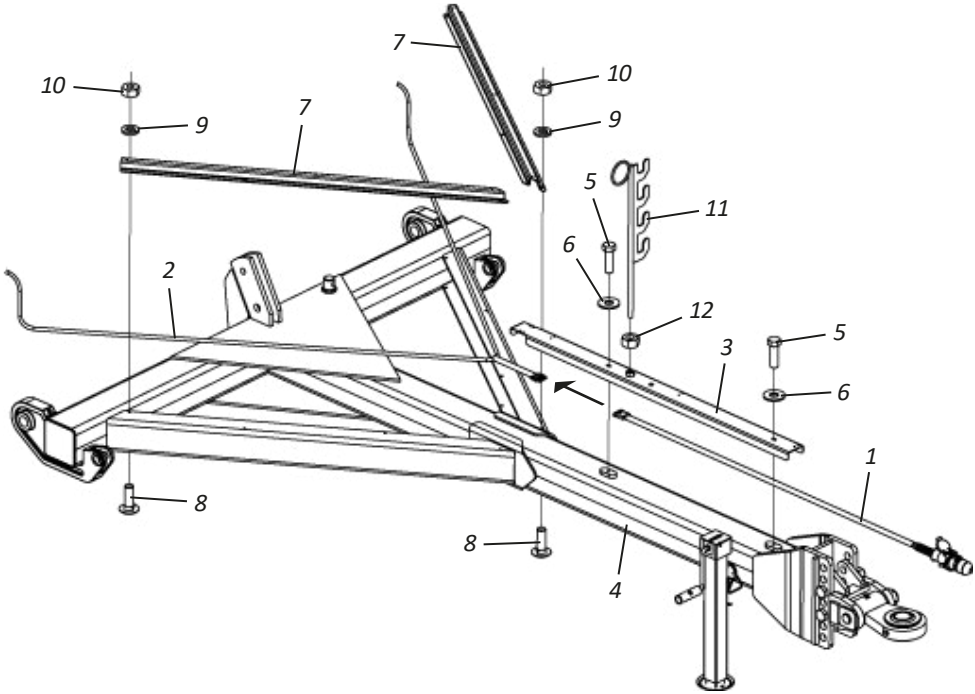

ATTENTION **Before assembling the electrical system, make sure that the tractor motor is off and that the ignition key has been taken out.**

▪ Assembly

• Assembly of lights

When finishing the assemble the electrical system, assemble the lights, proceeding as follows:

01 - Attach the cable (1) of the light (2) in the cable (3).
02 - Then fix the light (2) on the strut (4) with screws (5).

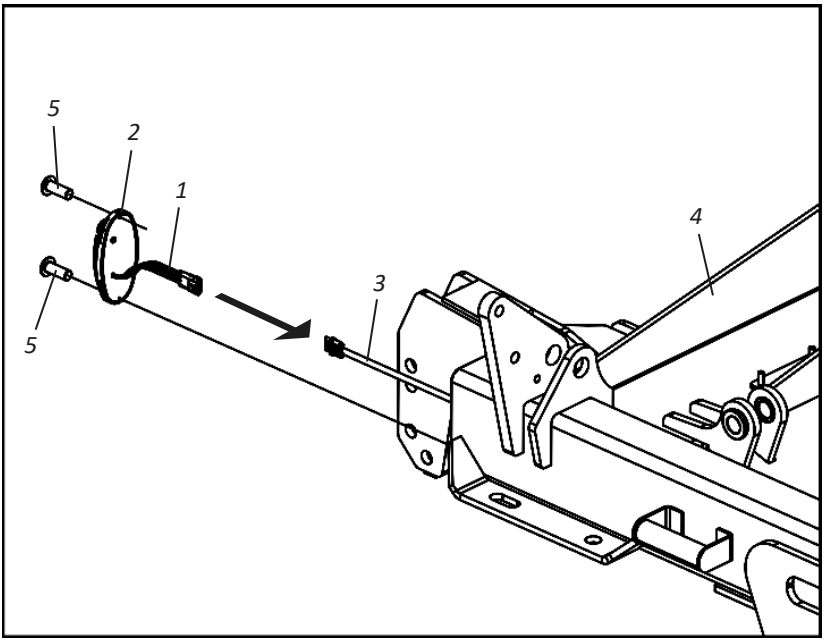

ATTENTION **DO NOT work or transport GCRTIS, especially on roads, without the assembling the electrical system (cables and lights).**

▪ Assembly

ASSEMBLY OF HYDRAULIC SYSTEM - GCRTIS 62 / 66 / 70 DISCS

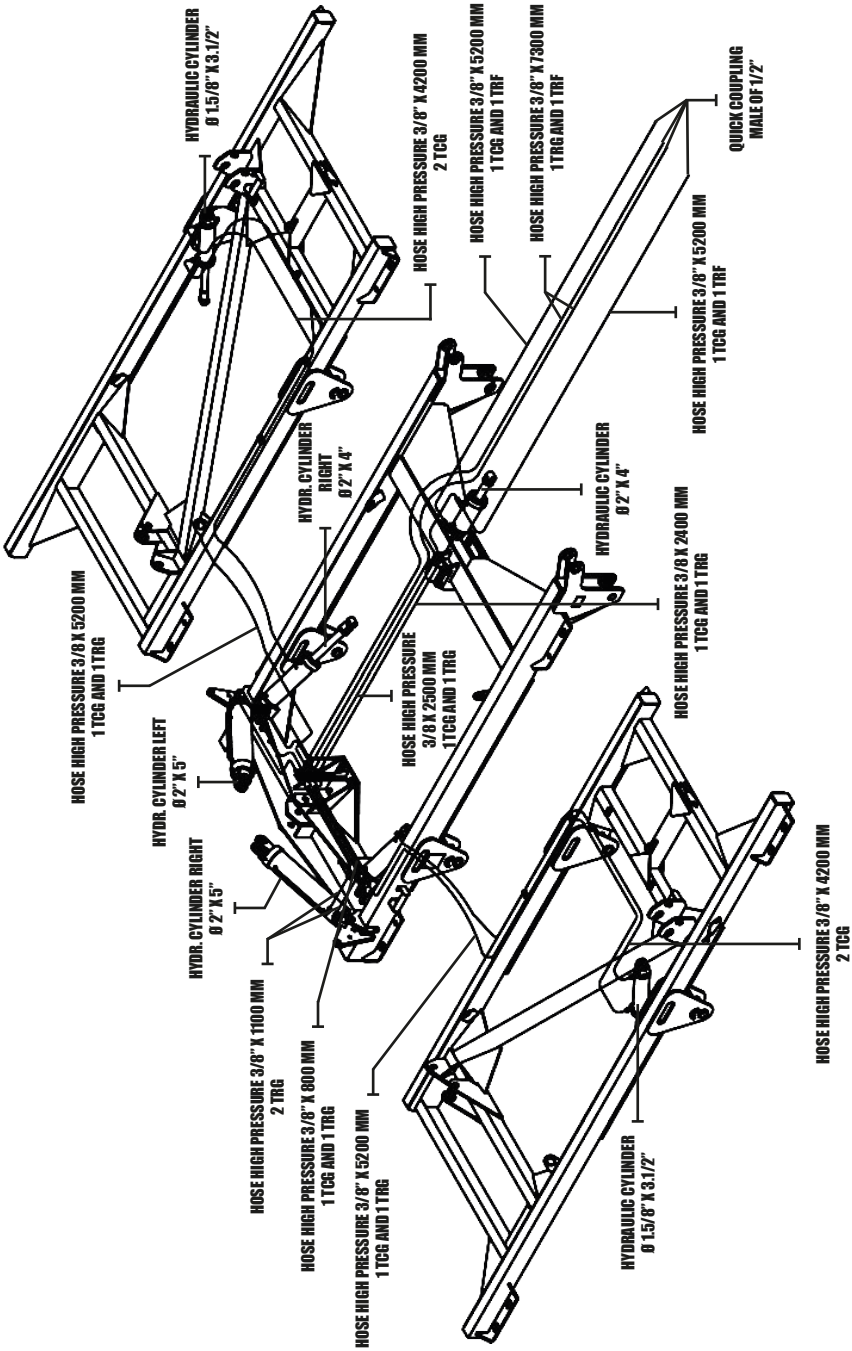

▪ Coupling

HARROW COUPLING IN THE TRACTOR BAR OF THE TRACTOR

To level the **GCRTIS**, proceed as follows:

01 - Level the coupling head (1) of **GCRTIS** with the tractor's coupling through regulations (2) of the coupling shackle. Next, slowly approach the tractor to the harrow in reverse, being aware when to use the brakes.

02 - Couple **GCRTIS** to the tractor by attaching it with coupling pin (3), plain washer and lock (5).

03 - After, couple the hydraulic hoses (6) and the electrical cable (7) in the tractor.

04 - End the coupling by attaching the safety chain (8) between the harrow and tractor.

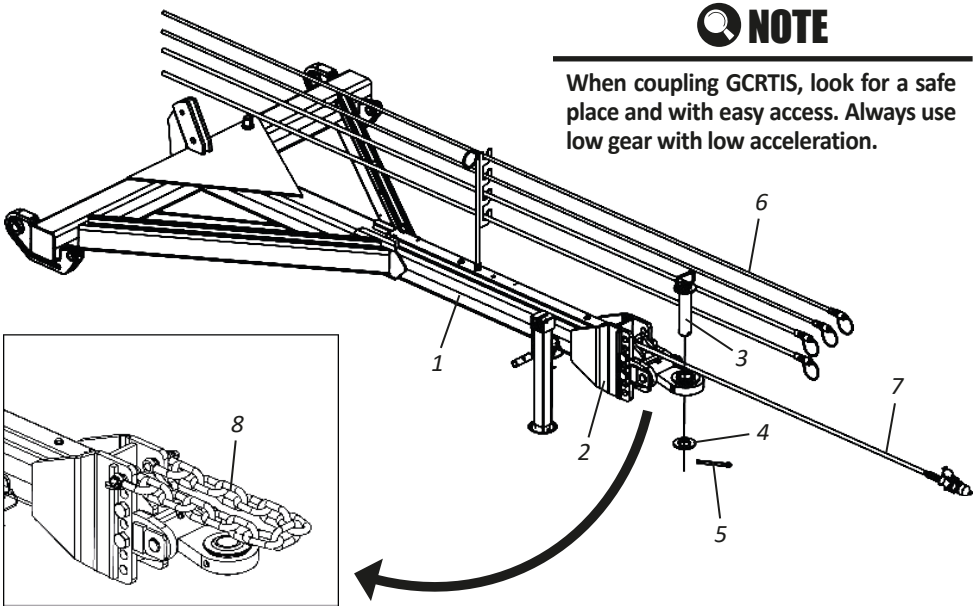

NOTE

When coupling GCRTIS, look for a safe place and with easy access. Always use low gear with low acceleration.

ATTENTION

The safety chain (8) provides greater safety during work and transportation preventing the GCRTIS from decoupling from the tractor in case of breakage of the coupling pin (3). We recommend to NOT work or transport GCRTIS without attaching the safety chain (8).

IMPORTANT

Before connecting or disconnecting the hydraulic hoses, relief the system pressure by activating the control with the tractor power switched off.

▪ Levelling

LEVELLING OF THE HARROW - PART I

To level the **GCRTIS**, proceed as follows:

01 - Place the tractor and **GCRTIS** in a plain location.

02 - Then, before lifting the **GCRTIS**, loose the nut and lock nut (1) until they face the point of the central rod (2), **as shown in detail "A".**

03 - Then, loose the nut and lock nut (3) until they touch the base of the central rod (2), **as shown in detail "B".**

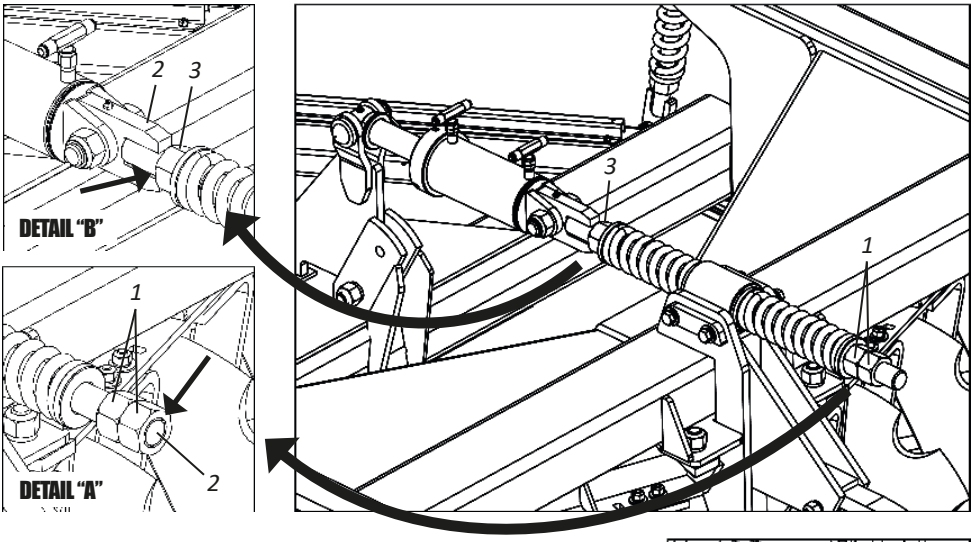

04 - Following, make sure that the nut (4) is touching the sheet's face (5) in a way that the spring (6) remani s loose. Make sure that the nut (7) is also facing the base of the rod (8) of the head.

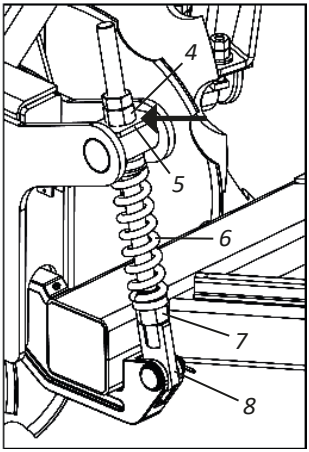

▪ Levelling

LEVELLING OF THE HARROW - PART II

05 - Then, as an initial parameter, adjust the nut (9) so that it is 50mm away from the face of the rod (10).

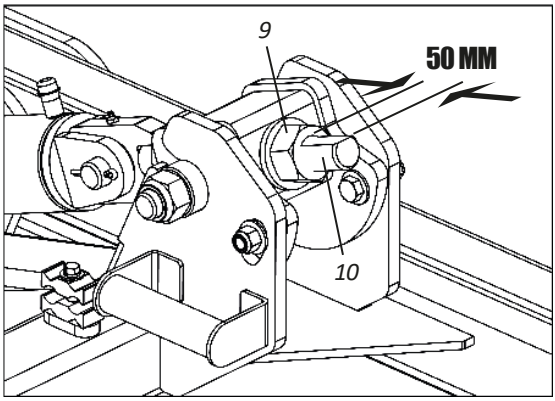

⚠ ATTENTION

This adjustment shall be done on both side frames (left and right) of GCRTIS.

06 - Then, activate to lift the harrow and observe if **GCRTIS** is positioned on the front or rear.

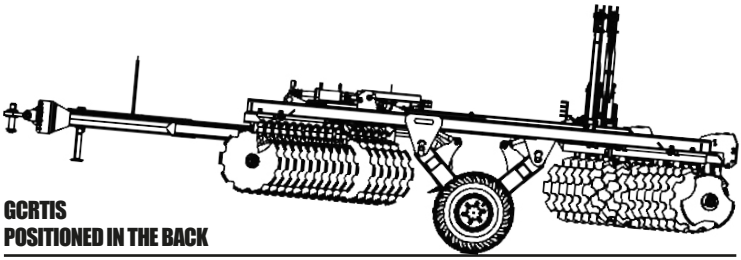

GCRTIS
POSITIONED IN THE BACK

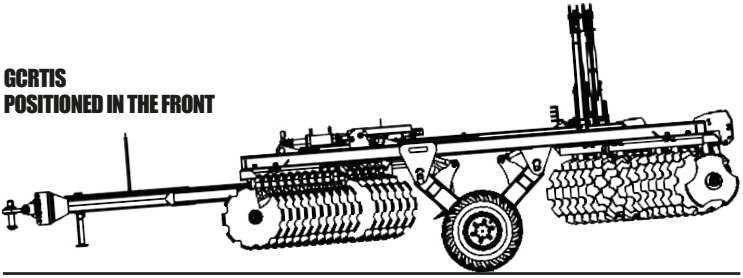

GCRTIS
POSITIONED IN THE FRONT

07 - According to the position of **GCRTIS**, perform the regulation of the following pages to level the harrow.

▪ Levelling

LEVELLING OF THE HARROW - PART III

08 - **REAR POSITION:**

If **GCRTIS** is on the rear position, proceed as follows:

01 - Lower the **GCRTIS** by relieving the hydraulic system.

02 - Following, tighten the nuts and lock nuts every 10 mm, compressing the springs of the head's rod. Then, activate the hydraulic system to lift the **GCRTIS** and check its position. If it is still necessary to adjust it, lower it again pressing the nuts and lock nuts (9) + 10 mm and lift and check it again.

03 - Following, check if the side struts are levelled with the central strum, if you need regulation, proceed as follows:

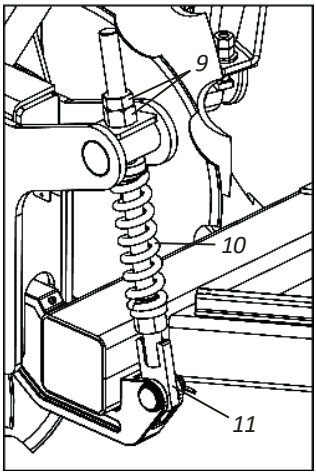

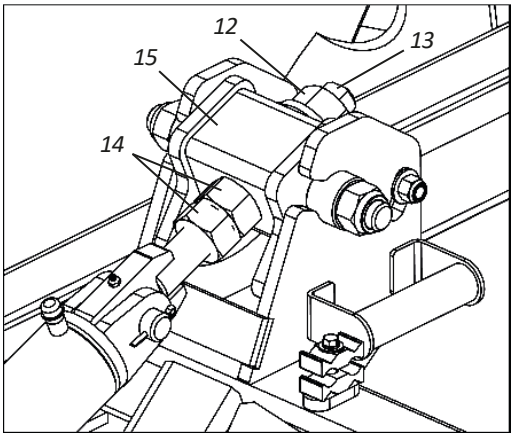

04 - Loose the nut (12) of the side rod (13) and, consequently, tighten the nuts and lock nuts (14) to touch the square tube (15).

⚠ ATTENTION

This adjustment shall be done on both side frames (left and right) of GCRTIS.

! IMPORTANT **The measures mentioned in the levelling are initial parameters to level the GCRTIS.**

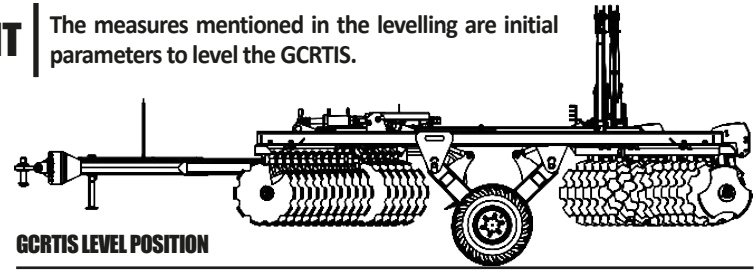

GCRTIS LEVEL POSITION

▪ Levelling

LEVELLING OF THE HARROW - PART IV

09 - **FRONT POSITION:**

If **GCRTIS** is on the front position, proceed as follows:

01 - Low the **GCRTIS** relieving the hydraulic system.

02 - Following, loose the nuts and lock nuts (16) every 20 mm, decompressing the springs (17) of the head's rod (18). Then, tighten the nut (19) so that the bushing (20) touch the guide (21). Then, activate the hydraulic system to lift the **GCRTIS** and check its position. If it is still necessary to adjust it, lower it again loosing the nuts and lock nuts (16) + 20 mm and lift and check it again.

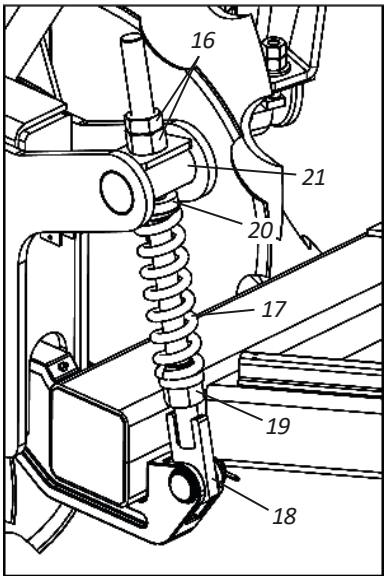

03 - Following, check if the side struts are levelled with the central strum, if you need regulation, proceed as follows:

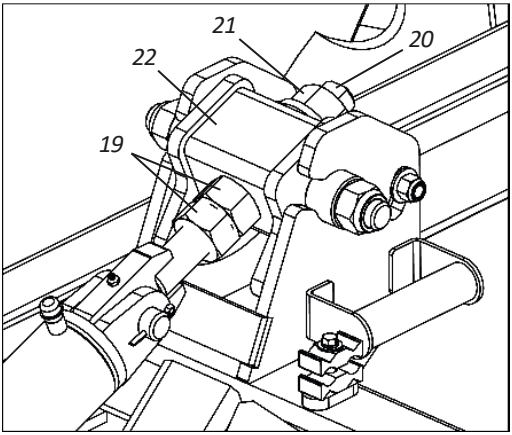

04 - Loose the nuts and lock nuts (19) slowly of the side rod (20) and, consequently, tighten the nuts and lock nuts (21) to touch the square tube (22).

⚠ ATTENTION

This adjustment shall be done on both side frames (left and right) of GCRTIS.

▪ Levelling

LEVELLING OF THE HARROW - PART V

05 - If you still need to adjust, tighten the nut and lock nut (23) of the central rod (24) every 20 mm. Repeat the whole process until **GCRTIS** is leveled.

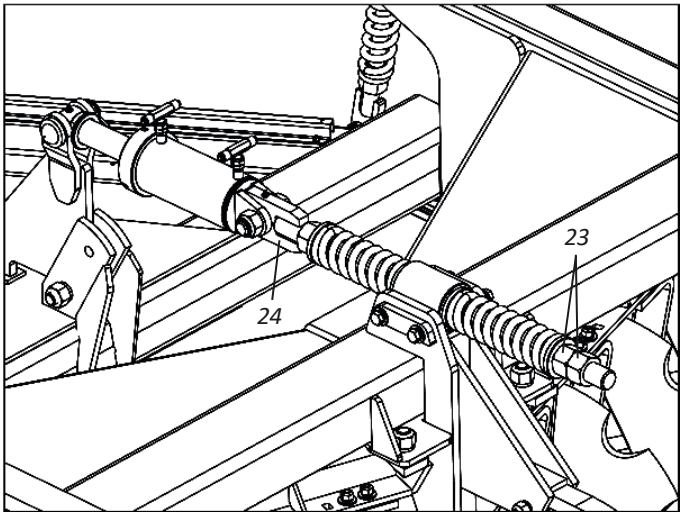

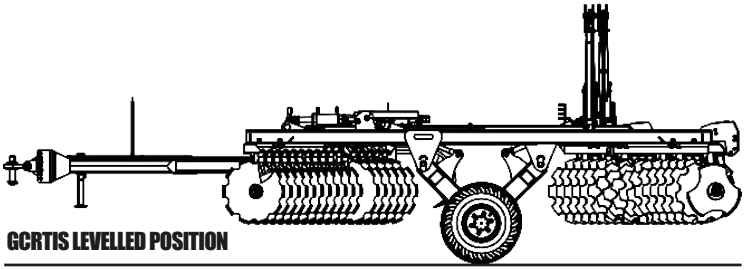

GCRTIS LEVELLED POSITION

ATTENTION | **The measures mentioned in the leveling are initial parameters to level the GCRTIS.**

▪ Adjustments

• Adjustment for transport - Part I

Before any operation with **GCRTIS**, read the following information:

⚠ When starting the hydraulic process for the first time, there is a higher need for hydraulic flow of the tractor. On the 1st operation, observe the tractor's hydraulic oil level.

⚠ Before starting the articulation of **GCRTIS**, check the adjustment of oil flow so that the articulation is not abrupt, causing damages to the harrow.

⚠ When articulating **GCRTIS**, where necessary, fill the tractor's hydraulic oil level. Check the manufacturer's technical manual of the tractor.

⚠ Let the oil flow be slower.

Before transporting **GCRTIS**, proceed as follows:

01 - Articulate the side frames (1).

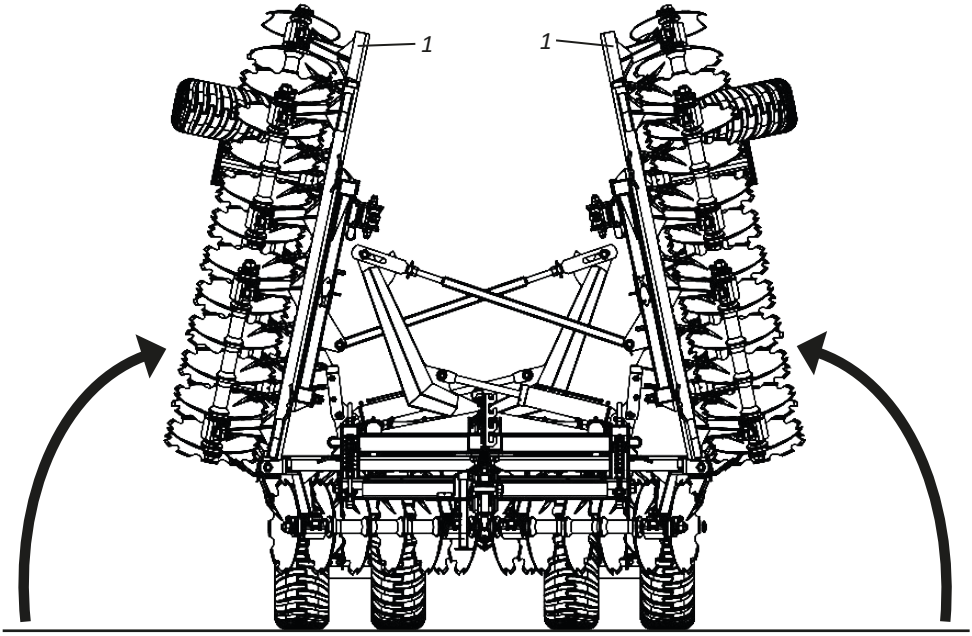

⚠ **ATTENTION** **When finishing the articulation, DO NOT allow that people stay under the side (1) or in the area of action of them;**

▪ Adjustments

• Adjustment for transport - Part II

02 - Following, lock the side frames (1) with union bars (2), fixing them with pins (3) and locks with ring (4).

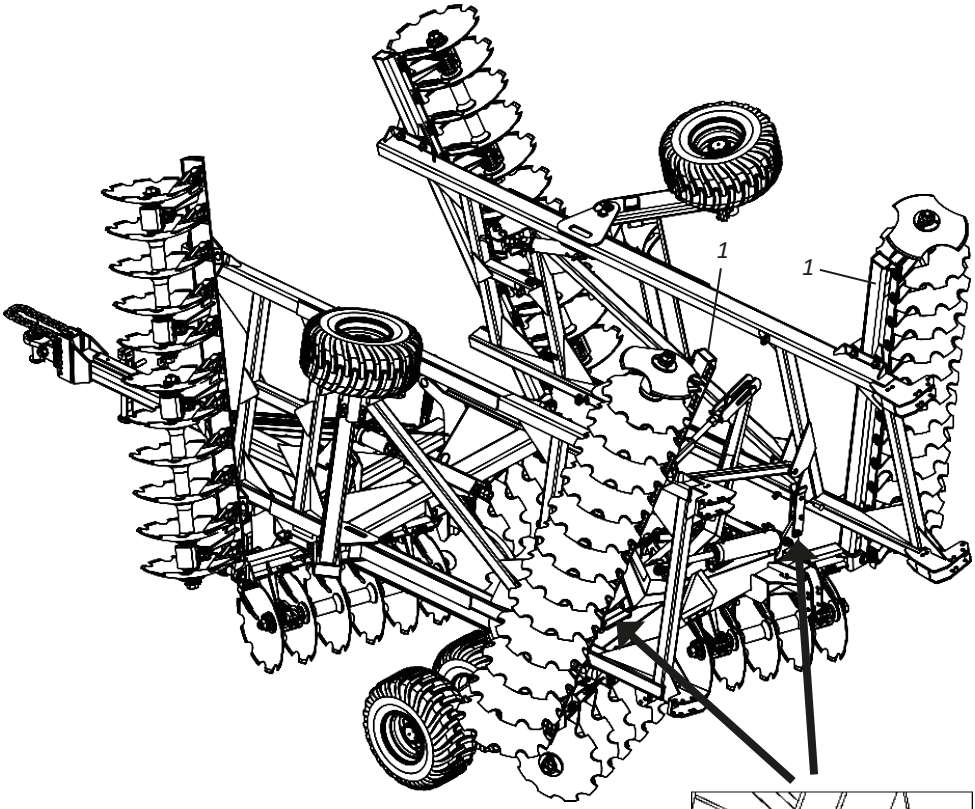

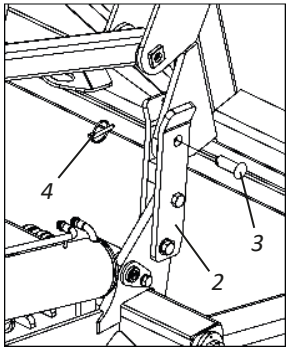

⚠ ATTENTION

Do not transport GCRTIS without locking the side frames (1). Do not transport GCRTIS with only one side locked. Always lock both union bars (2) together (right side and left side) of the harrow.
When finishing the transportation of GCRTIS, remove the pins (3) and locks (4), leaving the side frames free (1) to start the articuation. Ignoring this warning may cause severe accidents or damage to the GCRTIS.

▪ Adjustments

• Adjustment for transport - Part III

03 - Loose the wing nut (5) and remove the locks (6) of the strut (7).

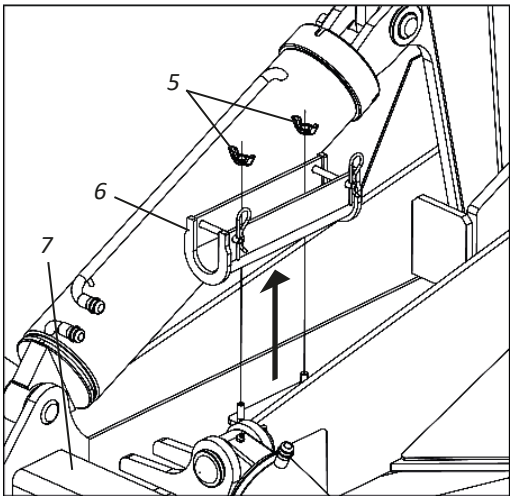

04 - Following, activate the course of hydraulic cylinders (8) of the wheelset (9), put the locks (6) and attach them with pins (10) and locks (11).

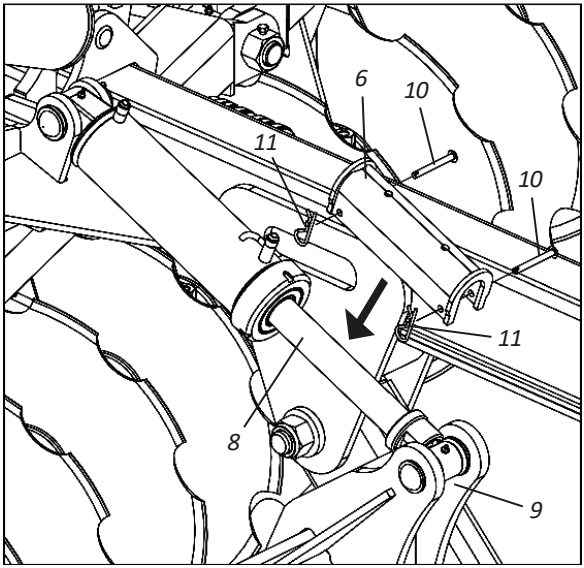

▪ Adjustments

• Adjustment for transport - Part IV

05 - Following, totally activate the course of hydraulic cylinders (12) of the head, put the lock (13)and attach it with pins (14) and locks (15).

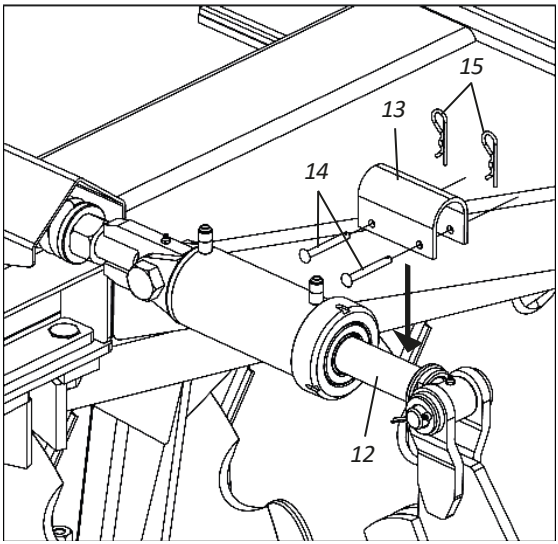

06 - When finishing the transport, remove the locks (6) of the hydraulic cylinders (8) and wheelset (9) and attach them again in the strut (7) with wing nuts (5).

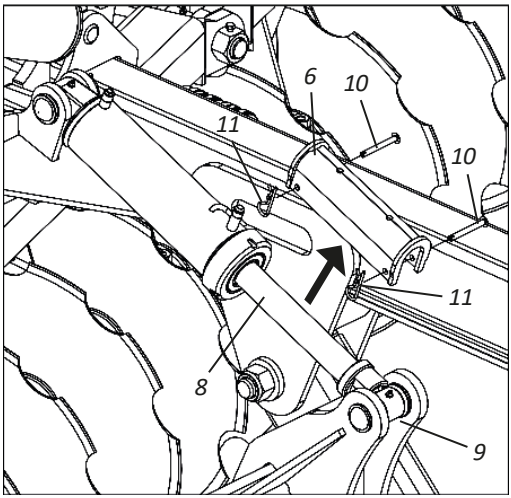

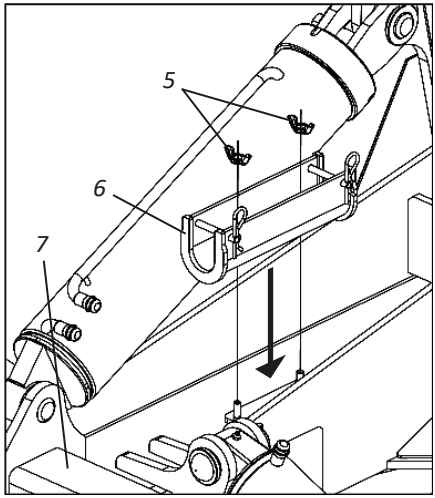

▪ Adjustments

• Adjustment for transport - Part V

07 - Following, also remove the lock (13) of the hydraulic cylinder (12) of the head, loosing pins (14) and locks (15).

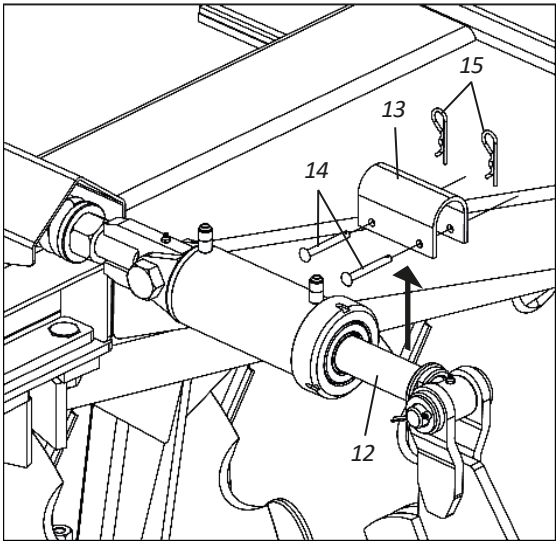

⚠ ATTENTION

Do not transport GCRTIS without putting the locks in the hydraulic cylinders (8) of the wheelset (9) and in the hydraulic cylinder (12) of the head. Ignoring this warning may cause damages to health, severe accidents or death.

▪ Adjustments

• Adjustment of working depth - Part I

In order to adjust the working depth through tires, limiting rings (1) are placed on the shafts of the hydraulic cylinders, providing many adjustments of working depth. In order to adjust the working depth, proceed as follows:

01 - Remove the limiting rings (1) from the strut (2).

02 - Then, activate the shafts of the hydraulic cylinders (3) of the wheelset until the measure needed.

03 - Following, put the limiting rings (1) in the hydraulic cylinders shafts (3) until filling the whole space between the shaft coupling and the hydraulic cylinder plunger (3).

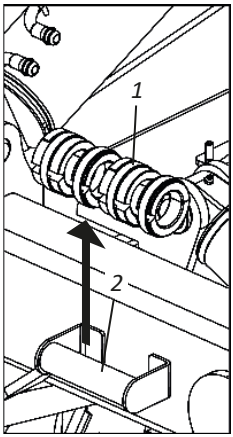

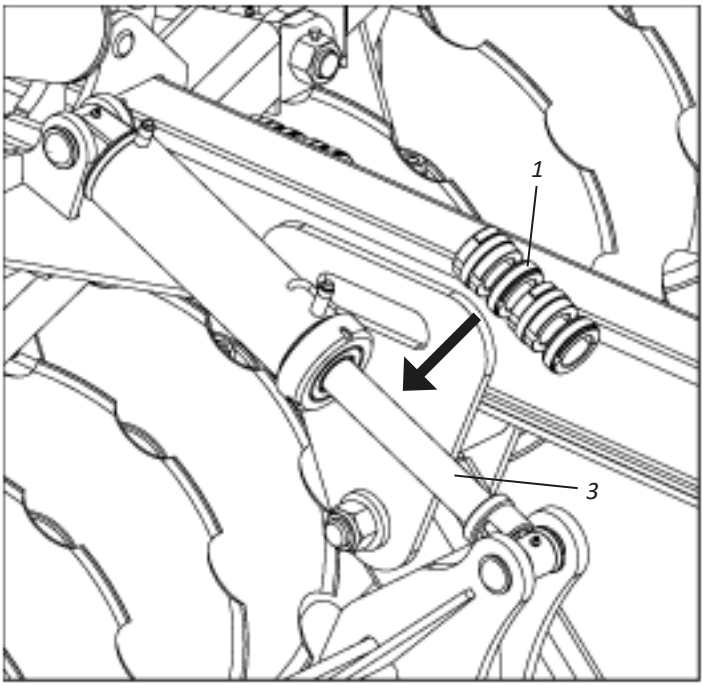

ATTENTION **Always put the same number of limiting rings (1) on the hydraulic cylinders (3) of the wheelset.**

▪ Adjustments

• Adjustment of working depth - Part II

04 - After finishing the works with **GCRTIS**, remove the limiting rings (1) from the hydraulic cylinders (3) of the wheelset and put them on the strut (2).

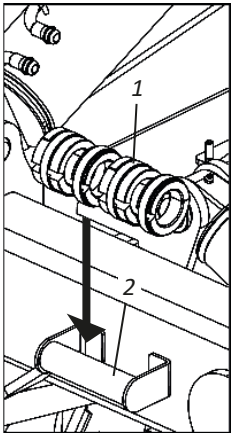

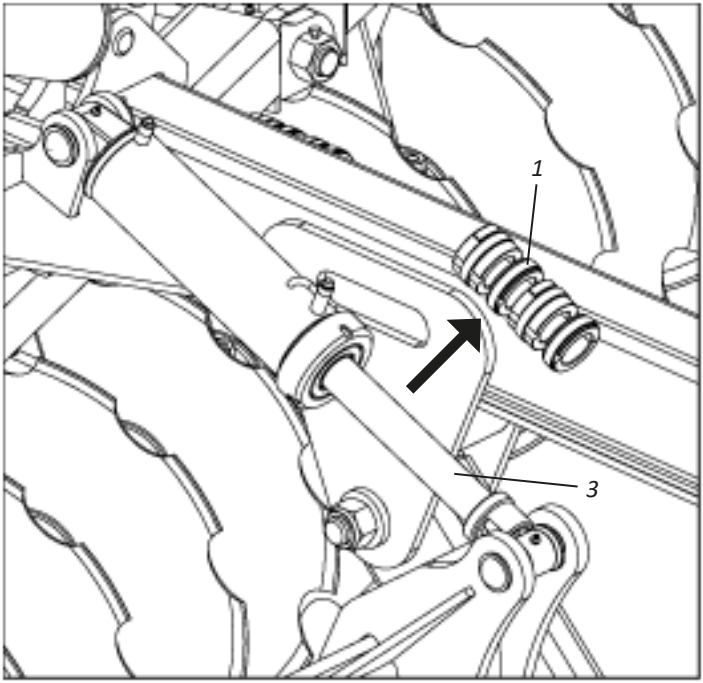

IMPORTANT After the adjustment, GCRTIS will always operate in the same depth, both in hard and soft ground, this is because the limiting rings (1) are limiting the hydraulic cylinder course (3) of the wheelset, that is, preventing the oscillation of the wheels.

NOTE The limiting rings (1) that come with GCRTIS have different sizes that combined provide various depth adjustments.

▪ Adjustments

• Adjustment of frames adjusters

In order for the side frames to have flexibility when operating on uneven ground or with irregularities, adjust the frame adjusters for this, proceed as follows:

01 - Level the harrow and then loose the pin (1), plain washers (2) and cotter pin (3).
02 - Next, lift the adjuster of the left frame (4), turn the adjuster (5) until the hole in the left articulation support (6) is centralized with the slot in the adjuster (5).
03 - Then reinsert the pin (1), plain washers (2) and cotter pin (3) and lock it with the bushing with pins (7).

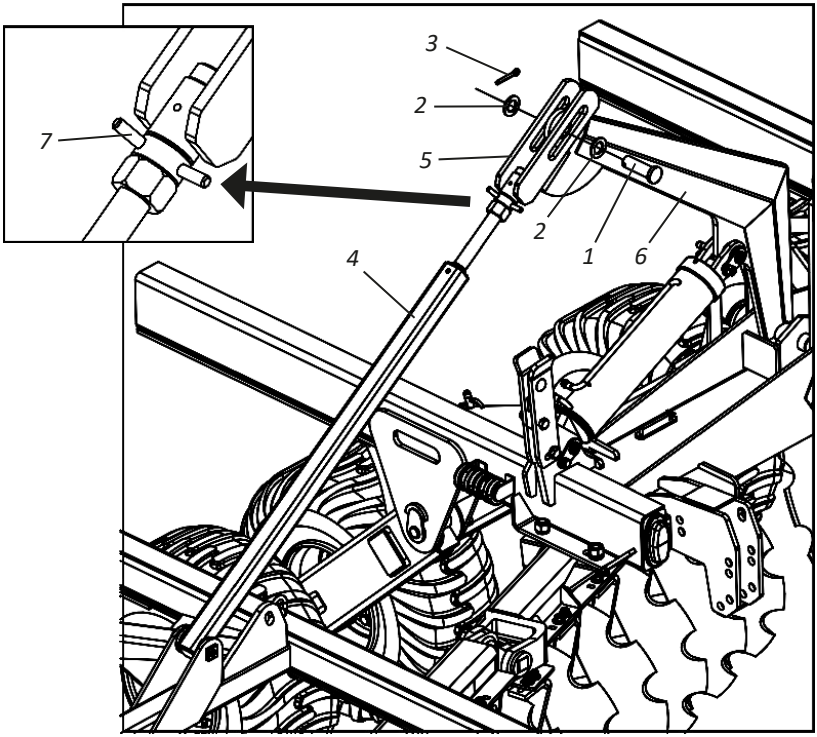

NOTE **Repeat the procedure above to assemble the frame regulator in the right side strut. The adjusters of right and left struts shall have the same adjutsment.**

▪ Operations

• Recommendations for operation - Part I

The preparation of **GCRTIS** and tractor will allow that you save time and have a better result in works on the field. The following suggestions may be useful for you.

HARROW STRUCTURE

After the first day of work with **GCRTIS**, tighten again all screws, nuts and check the conditions of pins and locks of the harrow structure. Then perform a general retightening on all screws and nuts in the harrow structure every 24 hours of work.

DISCS SECTIONS

Pay special attention to the discs sections of **GCRTIS**. Retighten all screws and nuts of the discs sections daily during the first week of use. Then retighten all screws and nuts of the discs sections periodically.

GENERAL RECOMMENDATION

01 - Adjust the tractor according to the content of the instruction manual, always using front and rear weights to stabilize the equipment.
02 - Always couple to the tractor in low gear and very carefully.
03 - When using **GCRTIS**, it is important to check the cross leveling and coupling system to be sure that the discs will have the same depth of penetration into the ground.
04 - After coupling and leveling, the next adjustments will be done directly in the field of work, analyzing the terrain in texture, humidity and the types of operations to be done with **GCRTIS**.
05 - In the tractor, choose a gear that allows you to maintain some reserve of power, guaranteeing against unforeseen efforts.
06 - Observe the working and transport speeds specified on page 11. We do not recommend you to exceed the speeds to maintain service efficiency and avoid possible damage to **GCRTIS**.
07 - When executing maneuvers in heads, first activate the hydraulic cylinders gradually, lifting the disc sections.
08 - During harrowing (with the discs on the ground), do not maneuver to the right or left, as the angles formed by the disc sections begin to transmit great effort to the equipment, especially the traction components.

▪ Operations

• Recommendations for operation - Part II

09 - Do not decouple any hose without first relieving the circuit pressure by turning the control levers a couple of times with the engine off.

10 - Remove pieces of wood or any other object that may be attached to the discs.

11 - In compacted ground where the penetration of the discs is difficult, the depth can be minimal, making the work unsatisfactory. In these cases, the application of other more suitable products is recommended.

12 - During work or transport, the tractor's drawbar must remain fixed.

13 - When performing any maintenance on **GCRTIS**, you should lower it to the ground and turn off the engine.

14 - **GCRTIS** has several adjustments, but only local conditions can determine the best adjustment.

In case of doubts, never operate or handle GCRTIS, refer to Post-Sales.
Telephone: 0800-152577 / E-mail: posvenda@baldan.com.br

▪ Calculation

• Approximate hourly output

To calculate the approximate hourly output of **GCRTIS**, use the following formula:

$$A = \frac{L \times V \times F}{X}$$

WHERE:

A = Area to be worked
L = Working width of the harrow (in meters)
V = Average speed of the tractor (in meters/hour)
F = Production factor: 0.90
X = Value of the hectare: 10,000 m²

Example: How much Ha will a GCRTIS 62 discs produce in an hour of work at an average speed of 7 km/h?

A = ?
L = 8,51 m
V = 7.000 m/h
F = 0,90
X = 10.000 m² (Calculated in hectare)

$$A = \frac{8{,}51 \times 7.000 \times 0{,}90}{10.000} = 5{,}36 \text{ Ha/h}$$

Model	N° of Discs	Working Width (mm)	Speed Average (m/h)	Output Factor	Approximate Output in Hectare Hour
GCRTIS	62	8510	7.000	0,90	5,36
	66	9040	7.000	0,90	5,69
	70	9600	7.000	0,90	6,04

The formula for calculating approximate output refers to the calculation of areas to be worked or worked by **GCRTIS**. If you want to know the time that will be spent to work in an area of known value, just divide the value of this area by the hourly output of **GCRTIS**.

Example: What will be the "X" time spent for a **GCRTIS 62 disc** harrow to produce 35 hectares, at an average speed of 7km/h?

$$X = \frac{35 \text{ Ha}}{5{,}36 \text{ Ha/h}} = 6{,}52 \text{ horas approximately to work 35 hectare.}$$

ATTENTION

The hourly output of GCRTIS can vary by factors that change the work rhythm as (soil humidity and hardness, terrain slope, inadequate adjustments and speed of work).

▪ Maintenance

GCRTIS has been developed to provide you with the maximum yield on land conditions. Experience has shown that periodic maintenance of certain parts of **GCRTIS** is the best way to help you avoid problems, so we suggest verification.

• Tires pressure

The tires should always be properly calibrated avoiding early wear due to excess or lack of pressure.

TIRES 400 X 60 14 LINERS

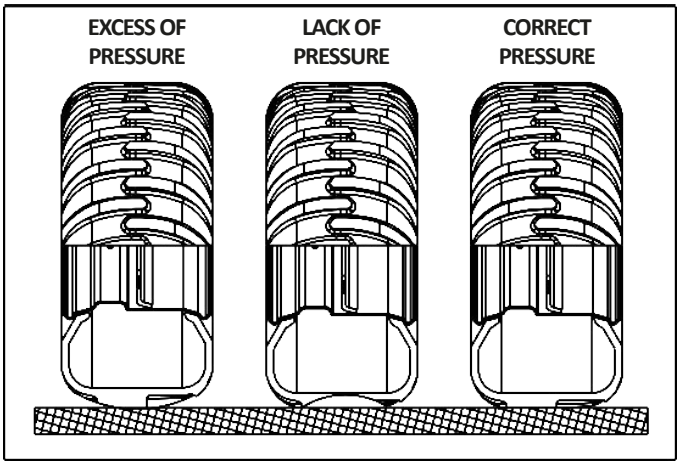

USE: 52 LBS/POL²

⚠ ATTENTION

Never weld the wheel mounted with tire, the heat may cause air pressure increase and provoke the explosion of the tire.
When filling the tire, position yourself besides the tire, never in front of it.
To fill the tire, always use containment device (filling cage).
Assemble the tires with proper equipment. The service should only be performed by people qualified to do the work.

IMPORTANT

When calibrating tires, do not exceed the recommended calibration.

NOTE

The pressure of the tractor tires should be performed according to the manufacturer´s recommendation.

▪ Maintenance

The **GCRTIS** has been developed to provide maximum performance over land conditions. Experience has shown that periodic maintenance of certain parts of the **GCRTIS** is the best way to help you avoid problems, so we suggest verification.

ATTENTION **Check nuts and bolts constantly, if necessary, retighten them. General harrow retention maintenance should be done every 8 hours of work.**

• Lubrification

Lubrication is indispensable for the good performance and durability of **GCRTIS** moving parts, contributing to the maintenance cost savings.

Before starting the operation, carefully lubricate all grease cups, always observing the lubrication intervals in the following pages. Make sure of the lubricant quality regarding its efficiency and purity, avoiding products contaminated by water, dust and other agents.

• Table of greases and equivalents

Manufacturer	Types of grease recommended
Petrobrás	Lubrax GMA-2
Atlantic	Litholine MP 2
Ipiranga	Ipiflex 2
Castrol	LM 2
Mobil	Grease MP
Texaco	Marfak 2
Shell	Alvania EP 2
Esso	Multi H
Bardahl	Maxlub APG-2EP
Valvoline	Palladium MP-2
Petronas	Tutela Jota MP 2 EP
	Tutela Alfa 2K
	Tutela KP 2K

ATTENTION **If there are equivalent manufacturers and/or brands that are not listed in the table, consult the manufacturer's technical manual.**

Maintenance

- **Lubrication every 24 hours of work - Part I**

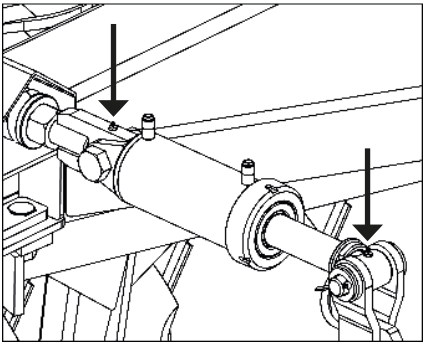

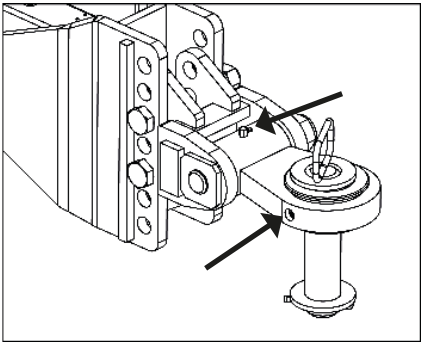

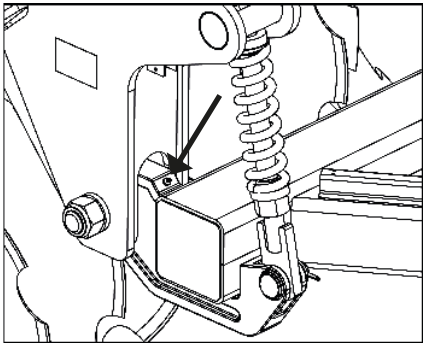

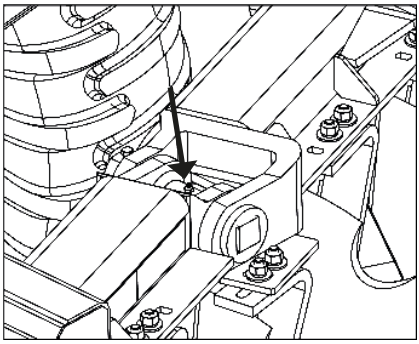

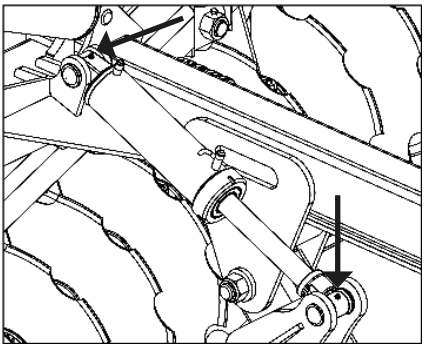

ATTENTION

When lubricating GCRTIS, do not exceed the amount of new grease. Put an enough amount.

▪ Maintenance

- **Lubrication every 24 hours of work - Part II**

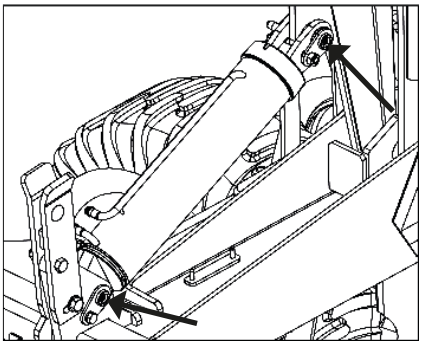

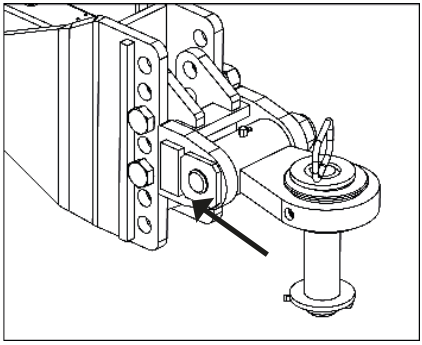

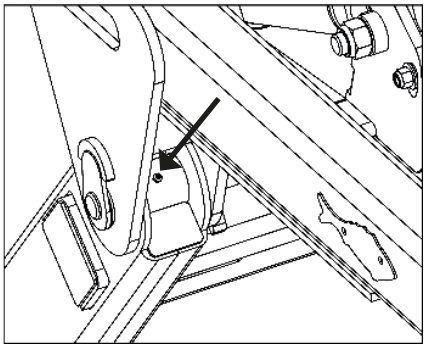

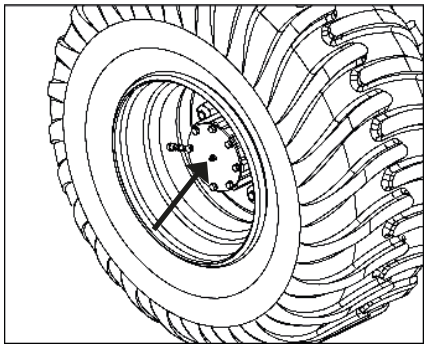

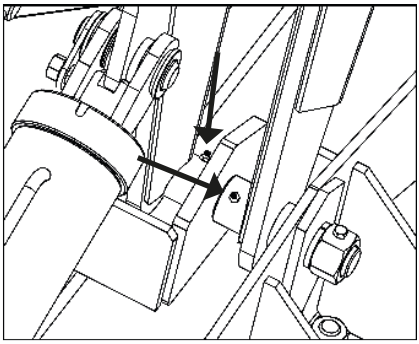

⚠ ATTENTION

When lubricating GCRTIS, do not exceed the amount of new grease. Put an enough amount.

▪ Maintenance

• Adjustments of the bearings of discs sections

To attach the left side frames (1) to the central frames (2), proceed as follows:

01 - Remove the washer (1).
02 - Next, loosen the screws (2) and remover the bearing (4) cover (3).
03 - Then, turn one or two joints (5) of the bearing (4) cover (3). Replace the cover (3) and retighten it.
04 - If the gap remains, the cover (3) can be squared to increase the adjustment, then assemble it on the bearing with as many joints as necessary.
05 - The bearing should turn freely, with no gaps.

⚠ ATTENTION

Do not assemble the bearing to the joints (5).

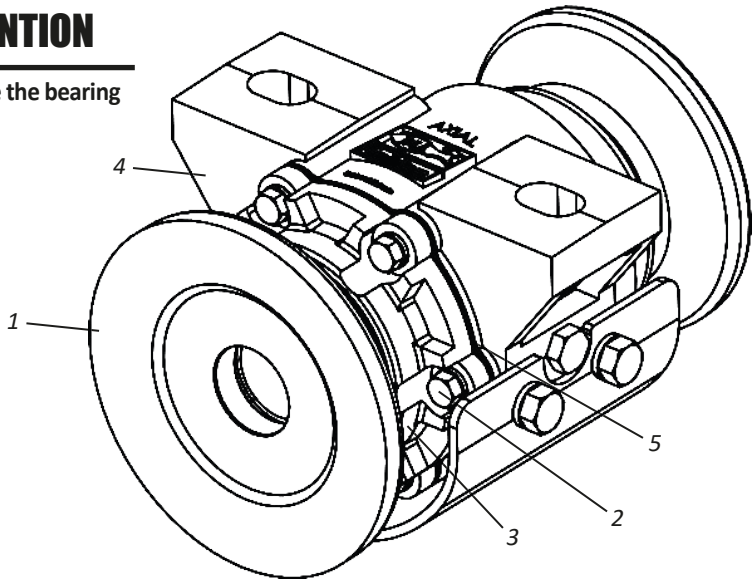

• Bearings oil

In the first days of working with **GCRTIS**, check the oil level of the bearings daily, then check every 120 hours of work.

Oil change should be done every 1200 hours of work. Use transmission oil 90 API GL4, MIL-L-2105; SAEJ306, may/81: SAE 80W, 90 and 140.

⚠ ATTENTION **The ideal oil level is when it reaches the plug hole. To check the bearing oil level, search for a plain place.**

▪ Maintenance

• Operational maintenance

PROBLEMS	PROBABLE CAUSES	SOLUTIONS
Tires are damaged.	Work area with rocks, stubs or crop remains with stems that shred the tire.	Eliminate elements that damage tires before using the GCRTIS.
	Improper tire pressure, creating deformations.	Maintain proper tires pressure.
Weird noise on wheels.	Loosen wheels or gap in wheel hub.	Retighten the wheel nuts and adjust wheel hub bearings.
	Breaking of bearings.	Identify the occurrence and females of the same type.
Quick coupling is not fitting.	Couplings of different types.	Change them for males and females of the same type.
Leakage in hydraulic hose.	Lack of sealing material on the thread.	Use sealing tape and retighten carefully.
	Insufficient tightening.	Retighten carefully.
	Damaged repairs.	Replace hubs.
Leakage in quick couplings.	Insufficient tightening.	Retighten carefully without excess.
	Damaged repairs.	Replace hubs.
Quick coupling is not coupling.	Couplings of different brands.	Use a quick coupling of the same brand.
	Mixing of needle-type coupling with sphere-type coupling.	Always use quick coupling of the same type.
	Pressure on the system.	Relief the pressure to couple.

▪ Maintenance

• Cares

01 - Before each work, check the condition of all hoses, pins, screws, bearings, discs and sections. Where necessary, retighten them.
02 - The displacement speed should be carefully controlled according to the land conditions.
03 - **GCRTIS** is used in several applications, requiring knowledge and attention during its handling.
04 - Only local conditions can determine the best method of operation of **GCRTIS**.
05 - When assembling or disassembling any part of **GCRTIS**, employ proper methods and tools.
06 - Observe the lubrication intervals carefully in the various lubrication points of **GCRTIS**. Respect the lubrication intervals.
07 - Always check if the parts have wears. If there is a need for replacement, always demand Baldan original parts.
08 - Keep the **GCRTIS** tires always calibrated.
09 - Keep the **GCRTIS** discs always sharp.

! IMPORTANT | **The proper and periodical maintenance are necessary to guarantee the long life of GCRTIS.**

▪ Maintenance

• General Cleaning - Part I

01 - When storing **GCRTIS**, perform a general cleaning and thoroughly wash only with water. Make sure the paint has not worn out, if this has happened, give a general coat, apply the protective oil and fully lubricate the **GCRTIS**. Do not use burned oil or other abrasive.
02 - Completely lubricate **GCRTIS**. Check all moving parts of **GCRTIS**, if they present wears or gaps, make the required adjustment or replace the parts, leaving the machine ready for the next work.
03 - After all maintenance precautions, store the harrow in a covered and dried location, properly supported.

▪ Maintenance

• General Cleaning - Part II

Avoid: - That the discs come into direct contact with the ground.
- The compression of the springs.
- That the hydraulic hoses be properly capped.

04 - When connecting or disconnecting the hydraulic hoses, do not let the ends touch the ground. Before connecting the hydraulic hoses, wipe the connections with a clean, lint-free cloth. **Do not use tow!**

05 - Replace all adhesives, especially those about warnings, that are damaged or missing. Make everyone aware of the importance and risks of accidents when instructions are not followed.

06 - After all maintenance precautions, store your **GCRTIS** in a plain surface, covered and dried location, away from animals and children.

07 - We recommend to wash the **GCRTIS** with water only on the beginning of works.

ATTENTION | **Do not use abrasives or chemical products to wash GCRTIS, it may damage its painting and adhesives.**

• Harrow conservation - Part I

To prolong the life and appearance of the **GCRTIS** for longer, follow the instructions below:

01 - Wash and clean all harrow components during and at the end of the work season.

02 - Use neutral products to clean the harrow following the safety and handling guidelines provided by the manufacturer.

03 - Always carry out maintenance during the periods indicated in this manual.

• Harrow conservation - Part II

The practices and precautions below if adopted by the owner or operator make the difference for the conservation of **GCRTIS.**

01 - Be careful when performing high-pressure washing; do not direct the water jet directly into the connectors and electrical components. Isolate all electrical components;

02 - Use only NEUTRAL detergent and water (pH equal to 7);

03 - Apply the product, following the manufacturer's instructions strictly, on the wet surface and in the correct sequence, respecting the time of application and washing;

▪ Maintenance

04 - Stains and dirt not removed with the products should be removed with the aid of a sponge.

05 - Rinse the machine with clean water to remove any chemical residues.

06 - Do not use: - Detergents with a basic active ingredient (pH less than 7) can damage/ stain the paint on the harrow.

- Detergents with acid active ingredient (pH less than 7), act as stripper/ remover of zinc coating (the protection of parts against oxidation).

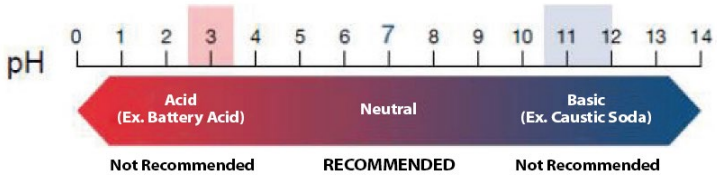

07 - Allow the machine to dry in the shade so that it does not accumulate water in its components. Very fast drying can cause stains on your paint.

08 - After drying, lubricate all chains and greases according to the recommendations in the operator's manual.

09 - Spray all the machine, especially the zinc parts, with protective oil, following the manufacturer's application guidelines. The protective also prevents dirt from adhering to the machine, facilitating subsequent washings.

10 - Observe curing time (absorption) and application intervals as recommended by the manufacturer.

⚠ ATTENTION | **Do not use any other type of oil to protect the harrow (used hydraulic oil, "burnt" oil, diesel oil, castor oil, kerosene, etc.).**

! IMPORTANT | **We recommend the following protective oils:**
- Bardahl: Agro protective 200 or 300
- ITWChemical: Zoxol DW - Series 4000

NOTE | **Ignoring the conservation measures mentioned above may result in the loss of warranty for painted or zinc-coated components which may exhibit oxidation (rust).**

▪ Lifting

• Lifting points

GCRTIS has **"A"** lifting points located on the lateral and central uprights, identified by the adhesive (1) attached to the side of these points. When assembling, loading, unloading or maintaining the **GCRTIS**, if you need to hoist with a winch, it is essential to engage the chains at the **"A"** lifting points.

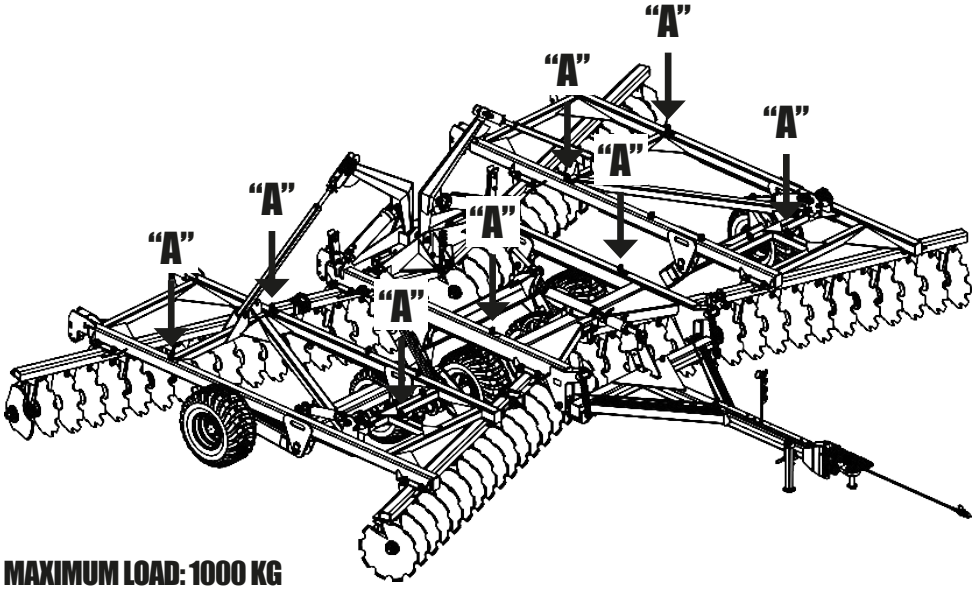

MAXIMUM LOAD: 1000 KG

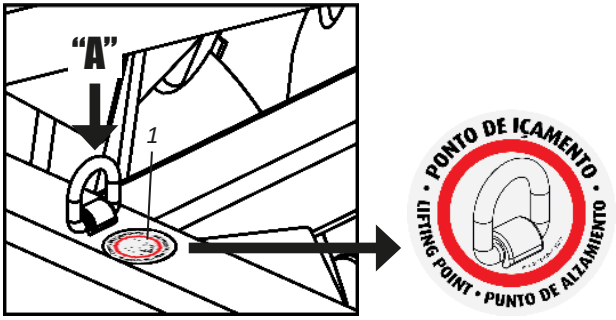

⚠ ATTENTION

The GCRTIS cannot be lifted when it is fully assembled. Lift the GCRTIS by modules, that is, by the lateral uprights and central uprights when they are decoupled from each other.

Optional

• Optional accessories

The **GCRTIS** has optional accessories that can be acquired according to the need of work.

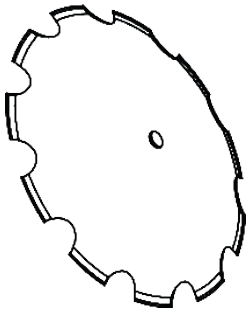

DISC TRIMMED
26" OR 28"

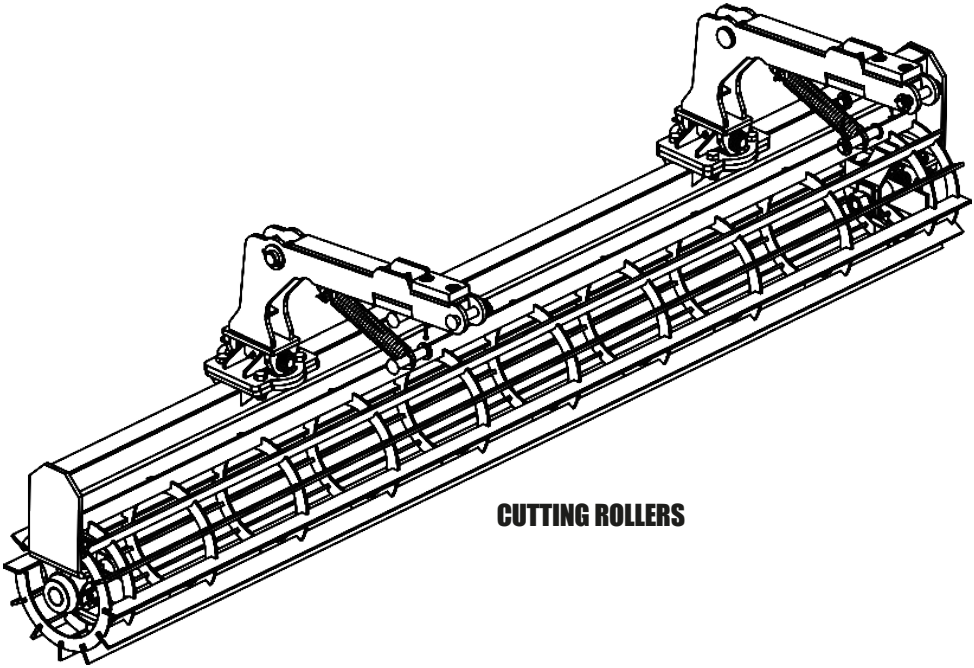

CUTTING ROLLERS

▪ Identification

• Identification plate

To see the parts catalog or to request technical assistance from Baldan, always inform model (01), serial number (02) and date of manufacture (03), which is on your **GCRTIS** nameplate.

⚠ ATTENTION

The drawings in this Instruction Manual are merely illustrative.

CONTACT

In case of doubts, never operate or handle your equipment without referring to Post-Sales.
Telephone: 0800-152577
e-mail: posvenda@baldan.com.br

PUBLICATIONS

Code: 60550108197 | CPT: GCRTIS06724E

PEÇAS ORIGINAIS BALDAN
ORIGINAL PARTS • PIEZAS ORIGINALES

▪ Identification

• Product Identification

Please make the correct identification of the data below, to always have information about the service life of your equipment.

Owner: _____

Dealer: _____

Property: _____

City: _____

State: _____

Certificate of Warranty no.: _____

Implement: _____

Serial No: _____

Purchase Date: _____

Invoice: _____

▪ Notes

Certificate of Warranty

BALDAN IMPLEMENTOS AGRÍCOLAS S/A ensures the dealer normal performance of the implement for a period of six (6) months as of the delivery date on the retail invoice to the first final consumer. During this period, **BALDAN** undertakes to repair defects in material and/or of manufacture of its liability, including labor, freight and other expenses of the dealer's liability.

In the warranty period, request and replacement of eventual defective parts shall be made to the dealer of the area, who will submit the faulty piece for **BALDAN** analysis. When this procedure is not possible and the resolving capacity of the dealer is exhausted, the dealer will request the support of **BALDAN Technical Assistance** through a specific form distributed to dealers. After analyzing the replaced items by Baldan Technical Assistance, and concluding that it is not a warranty, then the dealer will be responsible for the costs related to the replacement; as well as material expenses, travel including accommodation and meals, accessories, lubricant used and other expenses arising from the call out to Technical Assistance, and Baldan company is authorized to carry the respective invoice in the name of the resale. Any repair carried in the product within the dealer warranty deadline will only be authorized by **BALDAN** upon previous budget presentation describing parts and work to be performed.

The product is excluded from this term if it is repaired or modified by representatives not belonging to the **BALDAN** dealer network, as well as the application of non-genuine parts or components to the user's product. This warranty is void where it is found that the defect or damage is caused by improper use of the product, failure to follow instructions or inexperience of the operator.

It is agreed that this warranty does not cover tires, polyethylene tanks, cardan, hydraulic components, etc., which are equipment guaranteed by their manufacturers. Manufacturing and/or material defects, object of this warranty term, will not constitute, under any circumstances, grounds for termination of a purchase agreement, or for indemnification of any nature.

BALDAN reserves the right to change and/or perfect the technical characteristics of its products, without previous notice, and without obligation to proceed in the same way with the products previously manufactured.

▪ Inspection and Delivery Certificate

SERVICE BEFORE DELIVERY: This implement was carefully prepared by the sale organization, with all its parts inspected according to the manufacturing prescriptions.

DELIVERY SERVICE: The user was informed about the current warranty terms and instructed on the usage maintenance precautions.

I confirm that the user has been informed about the current warranty terms and instructed on the usage maintenance precautions.

Implement: _____ Serial Number: _____

Date: _____ Tax Number: _____

Dealer: _____

Telephone: _____ CEP: _____

City: _____ State: _____

Owner: _____

Telephone: _____

Address: _____ Number: _____

City: _____ State: _____

E-mail: _____

Sale date: _____

Signature / Dealer Stamp _____

1st copy - Owner

▪ Inspection and Delivery Certificate

SERVICE BEFORE DELIVERY: This implement was carefully prepared by the sale organization, with all its parts inspected according to the manufacturing prescriptions.

DELIVERY SERVICE: The user was informed about the current warranty terms and instructed on the usage maintenance precautions.

I confirm that the user has been informed about the current warranty terms and instructed on the usage maintenance precautions.

Implement: _____ Serial Number: _____

Date: _____ Tax Number: _____

Dealer: _____

Telephone: _____ CEP: _____

City: _____ State: _____

Owner: _____

Telephone: _____

Address: _____ Number: _____

City: _____ State: _____

E-mail: _____

Sale date: _____

Signature / Dealer Stamp _____

2nd copy - Dealer

▪ Inspection and Delivery Certificate

SERVICE BEFORE DELIVERY: This implement was carefully prepared by the sale organization, with all its parts inspected according to the manufacturing prescriptions.

DELIVERY SERVICE: The user was informed about the current warranty terms and instructed on the usage maintenance precautions.

I confirm that the user has been informed about the current warranty terms and instructed on the usage maintenance precautions.

Implement: _____ Serial Number: _____

Date: _____ Tax Number: _____

Dealer: _____

Telephone: _____ CEP: _____

City: _____ State: _____

Owner: _____

Telephone: _____

Address: _____ Number: _____

City: _____ State: _____

E-mail: _____

Sale date: _____

Signature / Dealer Stamp _____

3rd copy - Manufacturer (Please send completed within 15 days).

1.74.05.0059-5

AC MATÃO
ECT/DR/SP

RESPONSE CARD

NO STAMPING IS REQUIRED

THE STAMP WILL BE PAID BY:

BALDAN IMPLEMENTOS AGRÍCOLAS S/A.
Av. Baldan, 1500 | Nova Matão | CEP: 15993-900 | Matão-SP. | Brasil
Phone: (16) 3221-6500 | Fax: (16) 3382-6500
www.baldan.com.br | email: sac@baldan.com.br
Export: Phone: +55 (16) 3221-6500 | Fax: +55 (16) 3382-4212 | 3382-2480
email: export@baldan.com.br

BALDAN

Avenida Baldan, 1500
Nova Matão
15.993-900
Matão/SP - Brasil
sac@baldan.com.br
export@baldan.com.br

+55 16 3221 6500
baldan.com.br