Instruction Manual

PNA 3000/5000

Agricultural Rear Blade

BALDAN

▪ Presentation

We appreciate the preference and would like to congratulate you for the excellent choice you just made, since you have acquired a product manufactured with **BALDAN IMPLEMENTOS AGRÍCOLAS S/A** technology.

This manual will guide you through the procedures required since its acquisition until operational procedures of usage, safety and maintenance.

BALDAN assures that it has delivered this implement for resale in full and in perfect conditions.

Resale was responsible for the custody and maintenance during the period in its possession, and also for the assembly, retightening, lubrication and overhaul.

During the technical delivery, dealer should guide the user regarding maintenance, safety, their obligations in eventual technical assistance, strict compliance with the warranty term and reading the instructions manual.

Any technical assistance request while in warranty should be made to the dealer from whom you have purchased it.

We reiterate the need for a careful read of the warranty certificate and compliance of all items from this manual, because by doing so you will increase the life of your device.

Instruction Manual

PNA 3000/5000

Agricultural Rear Blade

BALDAN IMPLEMENTOS AGRÍCOLAS S/A.
CNPJ: 52.311.347/0009-06
Insc. Est.: 441.016.953.110

Scan the QR Code on the identification plate of your device and access this Instruction Manual online.

BALDAN

Index

BALDAN WARRANTY **07**
GENERAL INFORMATION **08**
To the owner *08*
SAFETY RULES **09**
To the operator ..... *09 - 12*
WARNINGS ..... **13 - 14**
COMPONENTS **15**
PNA 3000 - Agricultural Rear Blade *15*
PNA 5000 - Agricultural Rear Blade *16*
DIMENSIONES **17**
PNA 3000 - Agricultural Rear Blade *17*
PNA 5000 - Agricultural Rear Blade *18*
SPECIFICATIONS **19**
PNA 3000/5000 - Agricultural Rear Blade *19*
ASSEMBLY **19**
Assembly the blade (Blade rotation mechanical system) *20*
Assembling the blade (Blade rotation hydraulic system) *21*
Assembling the wheel support (Blade rotation mechanical system) *22*
Assembling the wheel support (Hydraulic blade rotation system) *23*
Assembling the iron wheel (Optional) - PNA 3000 ..... *24*
Assembling the transportation kit (Optional) - PNA 3000 with an iron wheel *25*
Assembling the hydraulic cylinders *26*
Assembling the shackle *26*
Assembling the hydraulic system for a tractor with double control without a rotating piston - PNA 3000 ... *27*
Assembling the hydraulic system for a tractor with double control without a rotating piston - PNA 5000 .. *28*
Assembling the hydraulic system for a tractor with triple control with a rotating piston - PNA 3000 ... *29*
Assembling the hydraulic system for a tractor with triple control with a rotating piston - PNA 5000 .... *30*
Assembling the electro hydraulic system (Optional - PNA 3000/5000 ..... *31 - 32*
Assembling the electronic system (Optional) - PNA 3000/5000 ..... *33*
Assembling the hydraulic system with Baldan triple control with a rotating piston - PNA 3000 .... *34*
Assembling the hydraulic system with Baldan triple control with a rotating piston - PNA 5000 ..... *35*
HITCH **36**
Tractor hitch *36*
LEVELING **37**
PNA leveling *37*
ADJUSTMENTS **38**
Adjusting the horizontal angle of the blade without a rotating piston *38*
Adjusting the horizontal angle of the blade with a rotating piston (Optional) *39*
Adjusting the vertical angle of the blade *40*

Index

TRANSPORTATION **41**
Preparing the PNA 3000 without an iron wheel for transportation *41*
Preparing the PNA 3000 with an iron wheel for transportation (Optional) ..... *42 - 43*
WORK **44**
Preparing the PNA 3000 whitout an iron wheel for work *44*
Preparing the PNA 3000 with an iron wheel for work (Optional) ..... *45 - 46*
OPERATIONS **47**
Terrace building ..... *47 - 48*
Terrain leveling *48*
Cutting depth *49*
MAINTENANCE **50**
Recommendations for operation *50*
General recommendations *50*
Tire pressure *51*
Lubrification *52*
Grease table and equivalents *52*
Lubricate every 10 hours of work *53*
Lubricate every 24 hours of work *54*
Operational maintenance ..... *55 - 56*
Cares *57*
General cleaning *58*
Planer Preservation ..... *58 - 59*
OPTIONAL **60**
Iron wheel for PNA 3000 ..... *60*
Transporte kit for PNA 3000 with an iron wheel *60*
Triple control *60*
Electric directing valve *60*
IDENTIFICATION **61**
Identification plate *61*
Product Identification *62*
NOTES **63**
CERTIFICATE **64**
Certificate of warranty ..... *64 - 70*

▪ Baldan Warranty

BALDAN IMPLEMENTOS AGRÍCOLAS S/A ensures the dealer normal performance of the implement for a period of six (6) months as of the delivery date on the retail invoice to the first final consumer.

During this period, **BALDAN** undertakes to repair defects in material and/or of manufacture of its liability, including labor, freight and other expenses of the dealer's liability.

In the warranty period, request and replacement of eventual defective parts shall be made to the dealer of the area, who will submit the faulty piece to **BALDAN** analysis.

When this procedure is not possible and the resolving capacity of the dealer is exhausted, the dealer will request the support of **BALDAN** Technical Assistance through a specific form distributed to dealers.

After analyzing the replaced items by **BALDAN** Technical Assistance, and concluding that it is not a warranty, then the dealer will be responsible for the costs related to the replacement; as well as material expenses, travel including accommodation and meals, accessories, lubricant used and other expenses arising from the call out to Technical Assistance, and **BALDAN** company is authorized to carry the respective invoice in the name of the resale.

Any repairment carried in the product within the dealer warranty deadline will only be authorized by **BALDAN** upon previous budget presentation describing parts and workforce to be executed.

The product is excluded from this term if it is repaired or modified by representatives not belonging to the **BALDAN** dealer network, as well as the application of non-genuine parts or components to the user's product.

This warranty is void where it is found that the defect or damage is caused by improper use of the product, failure to follow instructions or inexperience of the operator.

It is agreed that this warranty does not cover tires, polyethylene tanks, cardan, hydraulic components, etc., which are equipment guaranteed by their manufacturers.

Manufacturing and/or material defects, object of this warranty term, will not constitute, under any circumstances, grounds for termination of a purchase agreement, or for indemnification of any nature.

BALDAN reserves the right to change and/or perfect the technical characteristics of its products, without previous notice, and without obligation to proceed in the same way with the products previously manufactured.

General Information

• To the owner

BALDAN IMPLEMENTOS AGRÍCOLAS S/A is not responsible for any damaged caused by accident due to usage, transportation, or in the improper or incorrect transportation of its implement, whether by negligence and/or inexperience of any person.

Only people with complete knowledge of the tractor and the implement should carry their transportation and operation.

BALDAN is not responsible for any damaged caused in unpredictable or unrelated situations to the normal use of the implement.

The incorrect handling of this equipment may result in severe or fatal accidents. Before running the equipment, carefully read the instructions contained in this manual. Make sure that the person responsible for the operation is instructed as the correct and safe handling. Also make sure that the operator has read and understood the instructions manual of the product.

ATTENTION

NR-31 - SAFETY AND HEALTH AT WORK IN AGRICULTURE, LIVESTOCK FARMING, FORESTRY, FOREST EXPLORATION AND AQUACULTURE.

This Regulatory Standard has the purpose of establishing precepts to be observed in the organization and work environment, compatible to the planning and development of agriculture, livestock, forestry, forest exploitation and aquaculture with safety and health and work environment.

MR. OWNER OR OPERATOR OF THE EQUIPMENT.
Read and carefully comply with provisions of NR-31.

For more information, refer to the site and read NR-31 in full.
http://portal.mte.gov.br/legislacao/normas-regulamentadoras-1.htm

▪ Safety rules

• To the operator

THIS SYMBOL INDICATES IMPORTANTE SAFETY WARNING. IN THIS MANUAL, WHENEVER YOU FIND IT, READ THE FOLLOWING MESSAGE CAREFULLY AND PAY ATTENTION TO THE POSSIBILITY OF PERSONAL ACCIDENTS.

ATTENTION

Carefully read the instructions manual tolearn about the recommended safety practices.

ATTENTION

Only start to operate the tractor when you are properly seated and with the seat belt locked.

ATTENTION

Do not transport people on the tractor or over the equipment.

ATTENTION

There are risks of severe injuries due to tipping when working in sloped terrains. Do not over speed.

ATTENTION

Do not work with the tractor if the front has insufficient ballast to the rear equipment. Should there be a trend to lift, add weights or ballasts to the front or the front wheels.

ATTENTION

Before performing any maintenance in your equipment, make sure it is properly stopped. Avoid being run over.

Safety rules

ATTENTION

FOLLOW ALL RECOMMENDATIONS, WARNINGS AND SAFE PRACTICES RECOMMENDED IN THIS MANUAL, UNDERSTAND THE IMPORTANCE OF YOUR SAFETY. ACCIDENTS MAY LEAD TO DISABILITY OR INCLUDING DEATH. REMENBER, ACCIDENTS CAN BE AVOIDED!

ATTENTION

Do not perform adjustments while PNA is running.
When performing any service on PNA, switch off the tractor first.
Use appropriate tools.

ATTENTION

When searching for a possible leakage on the hoses, use a piece of cardboard or wood, never use your hands. Avoid fluid incision into the skin.

ATTENTION

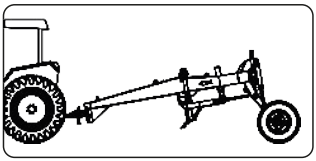

Be careful when transporting the PNA. Transport it slowly

ATTENTION

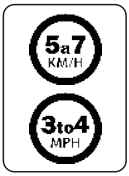

When working with the PNA, do not exceed 5 to 7 Km/h or 3 to 4 MPH, avoiding riks of injury and accident.

ATTENTION

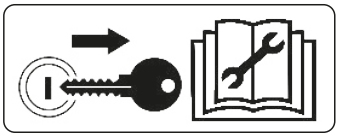

Remove the ignition key before performing any type of maintenance in PNA.
Protect yourself against possible injuries or death caused by PNA unexpected start-up.
Do not start up the tractor if PNA is not properly coupled.

ATTENTION

Hydraulic oil works under pressure and may cause serious injuries if there are any leakages.
Periodically check hoses for conservation. If there are any sign of leakage, replace them immediately.
Before connecting or disconnecting hydraulic hoses, relief system pressure by activating the command with the tractor power switched off.

Safety rules

ATTENTION

Always maintain places of access and work free of residues such as oil or grease to prevent accidents.

ATTENTION

Before working on or transporting the PNA, check for people or obstructions near the machine.

ATTENTION

Avoid heating parts near the fluid lines.
Heating may generate fragility in the material, rupture and exit of the pressurized fluid, causing burns and injuries.

ATTENTION

Keep the articulation area free while the PNA is in operation.
In closed curves, prevent tractor wheels from touching the head.

ATTENTION

Never weld the wheel mounted with tire, the heat may cause air pressure increase and provoke the explosion of the tire.
When filling the tire, position yourself besides the tire, never in front of it. To inflate a tire, always use a containment device (inflation cage).

ATTENTION

Always stay from the active element of the PNA (blade), as it is sharp and can cause accidents
When servicing blades, wear safety gloves.

ATTENTION

Dispose residues inappropriately affects the environment and the ecology since you will be polluting rivers, canals or the soil.
Inform yourself about the proper way of recycling or disposing residues.

PROTECT THE ENVIRONMENT!

▪ Safety rules

• PPE Equipament

ATTENTION | **DO NOT WORK WITH PNA WITHOUT FIRST WEARING PPES (SAFETY EQUIPMENT). IGNORING THIS WARNING MAY CAUSE DAMAGES TO HEALTH, SEVERE ACCIDENTS OR DEATH.**

When performing certain procedures with the **PNA**, place the following Safety Equipment (PPE) below:

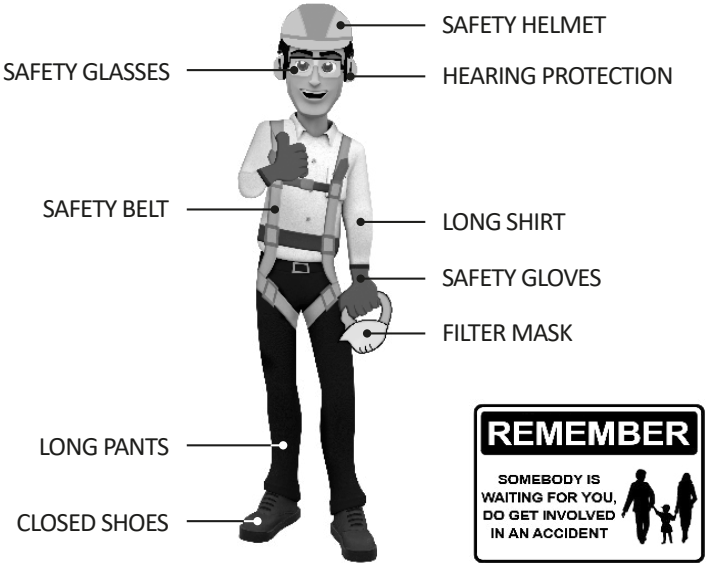

IMPORTANT

The safety practice must be performed in all stages of working with the PNA, thus avoiding accidents such as impact of objects, fall, noise, cuts and ergonomics, ie the person responsible for operating the PNA is subject to internal and external damage to your body.

OBSERVATION | **All PPEs (Safety Equipment) should have certificate of authenticity.**

▪ Warnings

⚠ When operating with the PNA, do not let people stand near to or on the machine.

⚠ When performing any maintenance service, use PPEs equipment.

⚠ Do not wear loose clothing, as it may get caught in the PNA.

⚠ Whe operating the tractor engine, properly sit in the operator's seat and be aware of the full knowledge of the correct and safe handling of both the tractor and the PNA. Always put the gear shift in neutral position, unplug the power take-off gear switch and place the hydraulic controls in neutral position.

⚠ Do not start the engine in a closed environment or with no proper ventilation since the exhaust gases are harmful to health.

⚠ When maneuvering the tractor to engage the PNA, make sure you have enough space and no one around, always maneuver at idle and be prepared to brake in an emergency.

⚠ Do not perform adjustments while the PNA is in operation.

⚠ When working in sloped terrains, proceed with precautions, always trying to maintain the required stability. In case of imbalance, reduce acceleration, turn the wheels to the slope side of the terrain and never lift the PNA.

⚠ Always drive the tractor at speeds compatible to safety, especially during woks in bumpy terrains or slopes, keep the tractor always engaged.

⚠ Do not work with the tractor in highways, keep the brake pedals interconnected.

⚠ Do not work with the tractor with a light rear. If the rear tends to lift, add more weights to the rear wheels.

⚠ When leaving the tractor, put the gear lever in neutral position and apply the parking brake. Never leave the PNA engaged in the tractor when its hydraulic system is in the raised position.

⚠ All maintenance work in the PNA must be carried out only after stopping and turning the tractor off.

⚠ Do not travel on highways especially at night. Use warnings signs throughout the route.

⚠ If you need to travel on highways with the PNA, consult the transit authorities.

⚠ Do not allow people who have not been trained to use the PNA, that is, that do not know how to operate it correctly.

⚠ Do not transport or work with the PNA near obstacles, rivers or streams.

⚠ The transportation of people on self-propelled machines and implements is forbidden.

⚠ Changes in the original features of the PNA are not allowed, as they may chance safety, operation, and useful life characteristics of the PNA.

⚠ Do not allow anyone, especially children, to be near to or on top of the planer during its transportation, operation, or storage.

▪ Warnings

⚠ Please read all safety information contained in this manual and the PNA carefully.

⚠ Read or explain all procedures in this manual to an operator who cannot read.

⚠ Always check that the PNA is in perfect conditions of use. In the event of any irregularity the may interfere with the operation of the PNA, ensure proper maintenance before any work or transportation.

⚠ Maintenance and especially inspection in risk areas of the PNA must be done by qualified or trained workers only, observing all safety guidelines. Before starting maintance, disconnect all PNA drive systems.

⚠ Periodically check all components of the PNA before use.

⚠ Before connecting or disconnecting hydrauli hoses, relieve system pressure by activating the control with the tractor off. Make sure that when relieving system pressure, no one is injured by the movement of the PNA.

⚠ Periodically check the condition of the hydraulic hoses. If there is evidence of oil leakage, replace the hoses immediately as the oil works under high pressure and can cause serious accidents.

⚠ According to the equipment used and the working conditions in the country or in areas of maintenance, precautions are necessary. Baldan has no direct control over precautions, so it is the owner's responsability to perform safety procedures while working with the PNA.

⚠ Check minimum tractor power recommended for the PNA. Only use tractors with power and ballast compatible with the load and terrain topography.

⚠ Alcoholic beverage or some medications may cause loss of reflexes and change the operator's physical conditions. Therefore, never operate the PNA under the influence of these substance.

⚠ Read or explain all the procedures of this manual to the operator who cannot read.

In the case of doubts consult the After Sales.
Phone: 0800-152577 / E-mail: posvenda@baldan.com.br

▪ Components

• PNA 3000 - Agricultural Rear Blade

1. Frame
2. Wheel support
3. Blade
4. Tire
5. Hitch shackle
6. Lift cylinder
7. Articulation cylinder
8. Hydraulic hoses

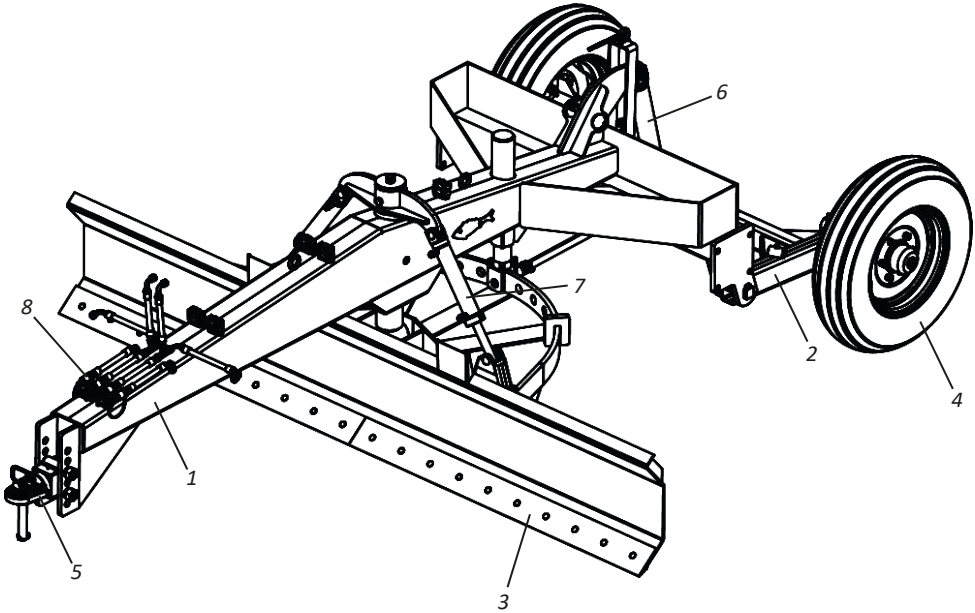

▪ Components

• PNA 5000 - Agricultural Rear Blade

1. Frame
2. Wheel support
3. Blade
4. Tire
5. Hitch shackle
6. Lift cylinder
7. Articulation cylinder
8. Hydraulic hoses

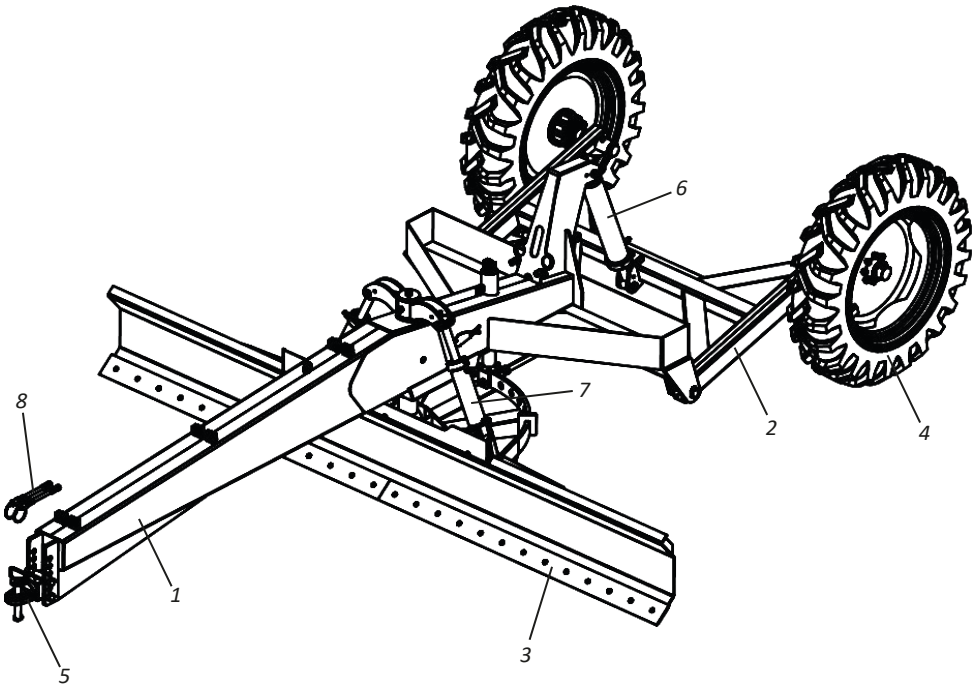

Dimensions

- PNA 3000 - Agricultural Rear Blade

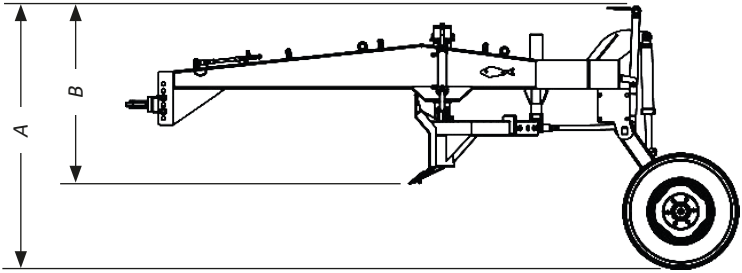

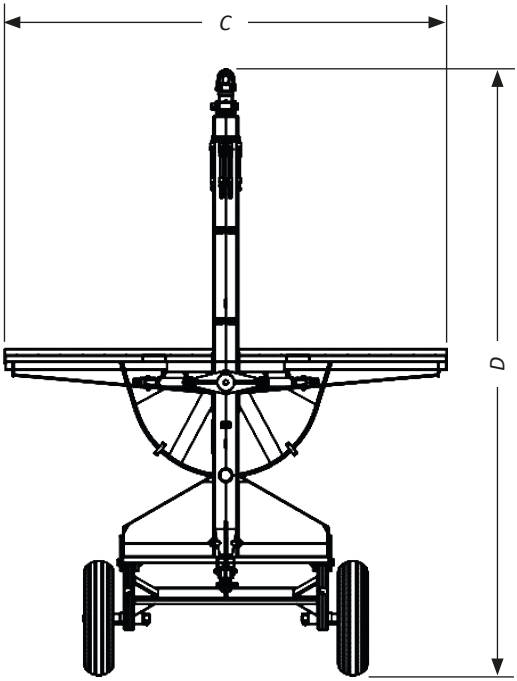

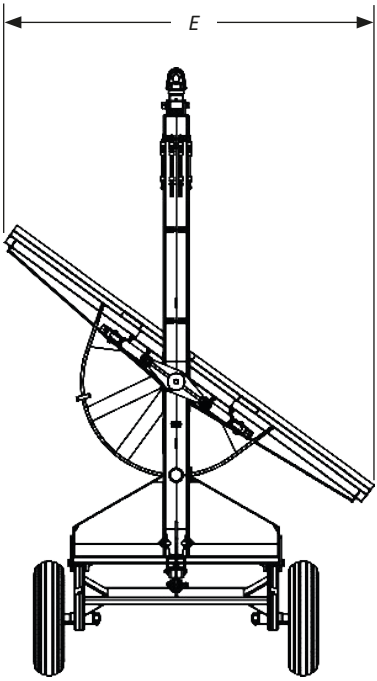

Model	A (mm)	B (mm)	C (mm)	D (mm)	E (mm)
PNA 3000	1728	1199	3006	4414	2510

▪ Dimensions

• PNA 5000 - Agricultural Rear Blade

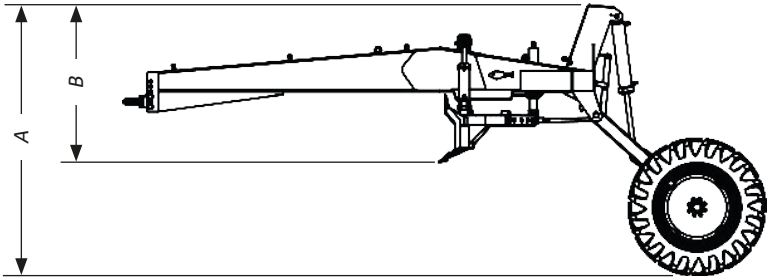

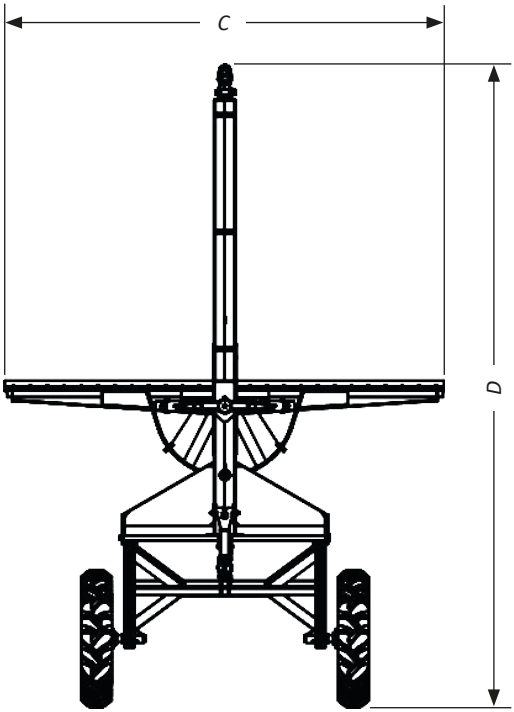

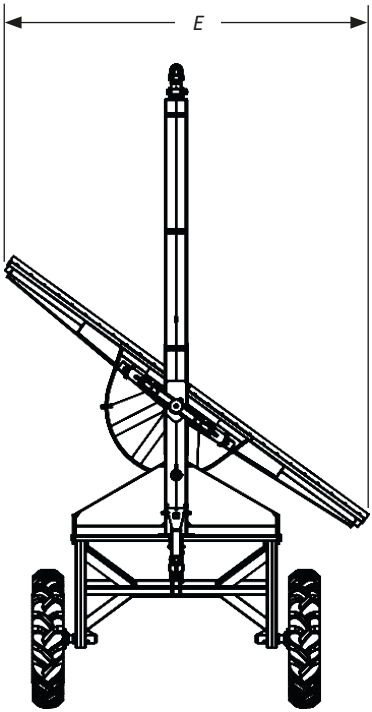

Model	A (mm)	B (mm)	C (mm)	D (mm)	E (mm)
PNA 5000	2543	1446	4031	5837	2945

▪ Specifications

• PNA - Agricultural Rear Blade

Model	Cutting Width (mm)	Blade Width (mm)	Lifting Hydraulic Cylinder (ø)	Hydraulic Cylinder for Angle Adjustment (ø)	Aproximate Weight w/ tires (Kg)	Aproximate Weight w/ Iron Wheel (Kg)	Tractor Power (HP)
PNA 3000	3000	3000	2.1/2”	2”	810	870	80 à 100
PNA 5000	4000	4000	4”	3.1/4”	1375	-	100 à 120

Baldan reserves the right to change and/or perfect the technical characteristics of its products, without previous notice, and without obligation to proceed in the same way with the products previously manufactured. Technical specifications are approximate and informed under normal work conditions.

INTENDED USING OF THE PNA

- The **PNA** was developed for road construction, rainwater runoff channels, landdfills and similar.
- The **PNA** should only be driven and operated by a properly instructed operator.

PROHIBITED USE OF THE PNA

- To avoid damage, serious accident or death, DO NOT transport people over any part of **PNA.**
- The **PNA** must NOT be used to push other implements or accessories.
- The **PNA** shout NOT be used by an inexperienced operator who does not know all the driving, command and operation techniques.

▪ Assembly

For easy loading and transportation, the **PNA** is sent disassembled from the factory. To assemble it, follow the instructions in the next pages:

⚠ The **PNA** must be assembled by the reseller, by people trained and qualified for this work.

⚠ Before starting the assembling the **PNA**, find an ideal place where you can easily identify parts and assemble them.

⚠ Do not wear loose clothing as it may get caught on the **PNA**.

▪ Assembly

• Assembly the blade (Blade rotation mechanical system)

To assemble the blade with a mechanical rotation system, proceed as follows:

01 - Couple the rear support (1) on the blade (2), fastening it through the pin (3).

02 - Then attach the blade (2) to the pillar (4), fastening it through the pin (5), locking it with the lock washers (6) and screws (7).

03 - Then, attach the bar (8) to the pin (3) fastening it through the screw (9), lock washer (10) and nut (11).

04 - Then attach the tripping support (12) to the pillar (4) fastening it through the bushing (13), screw (14), lock washer (15), nut (16) and int the bar (8) through the screw (17), lock washer (18) and nut (19).

05 - Finish by coupling the spring (20) to the tripping support (12) and the pillar (4).

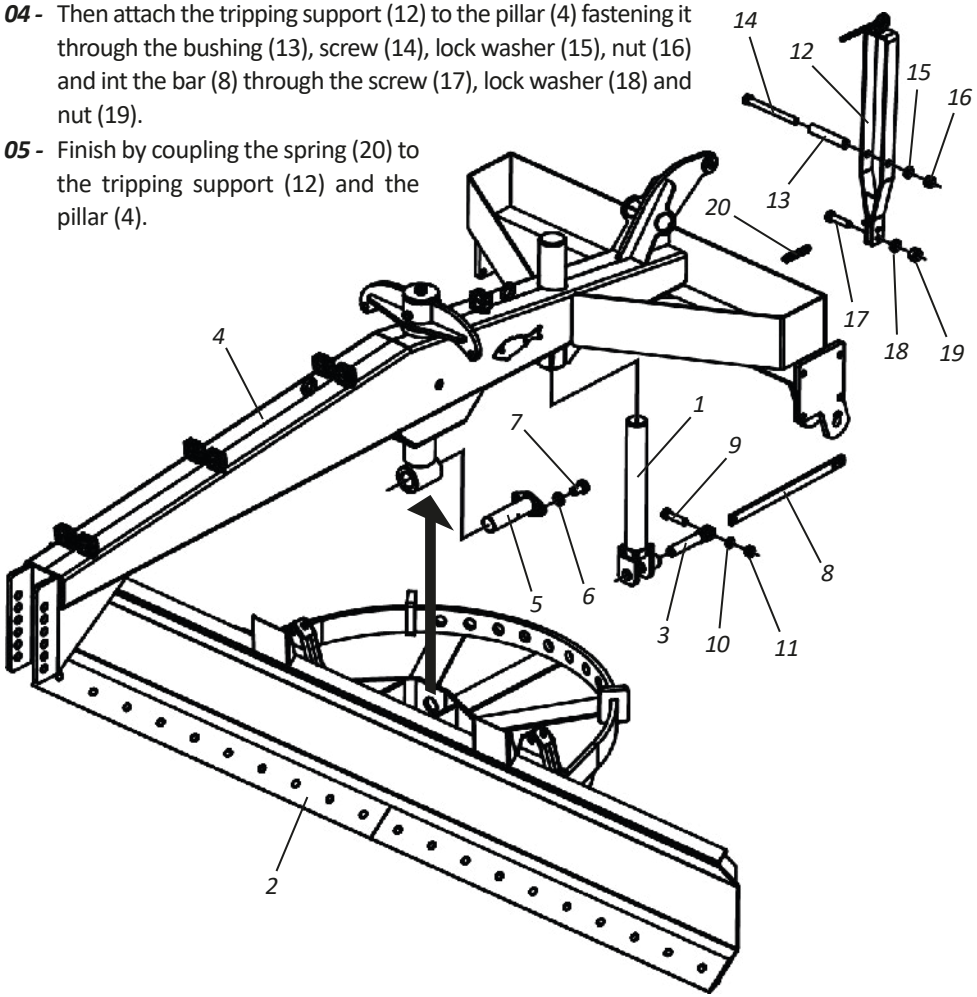

▪ Assembly

• Assembling the blade (Blade rotation hydraulic system)

To assemble the blade with a rotation hydraulic system, proceed as follows:

01 - Couple the back support (1) to the pillar (2), fastening it through the bushing (3), screw (4), lock washer (5), and nut (6).

02 - Then, attach the hydraulic cylinder (7) to the rear support (1) fastening it through the bearings (9), lock washers (10), and screws (11).

03 - Then, attach the blade (12) to the pillar (2) fastening it through the pin (13), locking it through the lock washers (14) and screws (15).

04 - Finish by coupling the hydraulic cylinder rod (7) to the blade (12), fastening it through the pin (16), locking it with the lock washer (17) and screws (18).

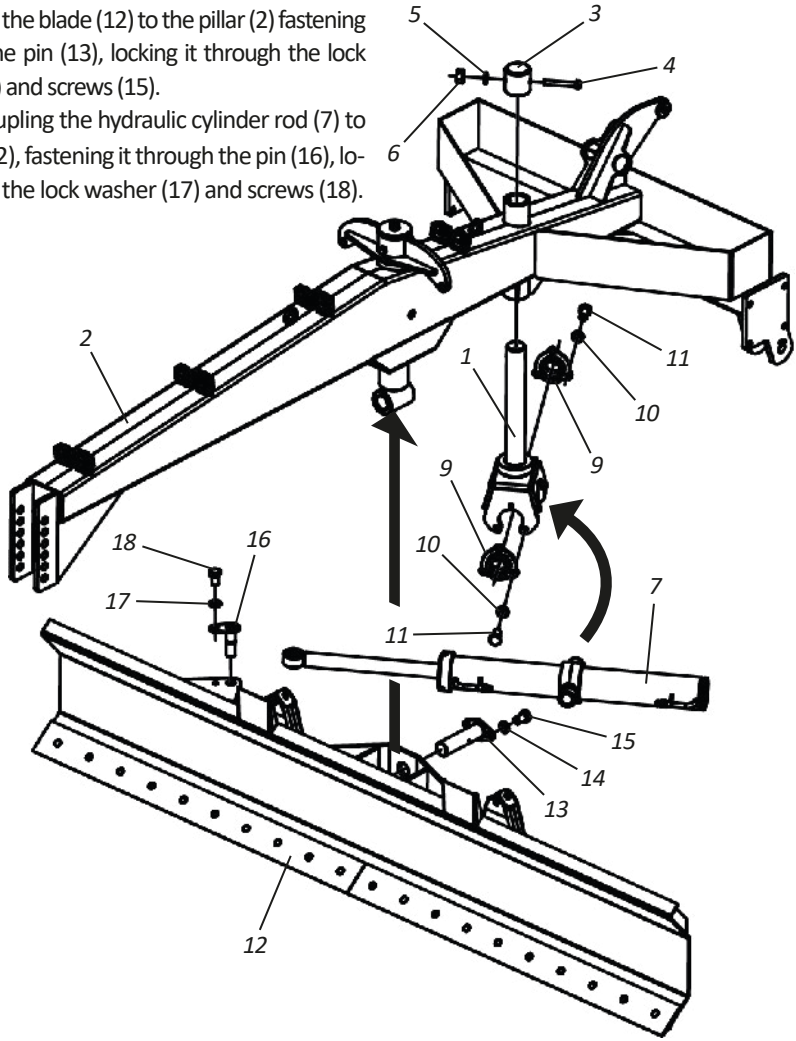

▪ Assembly

• Assembling the wheel support (Blade rotation mechanical system)

To assemble the wheel support, proceed as follows:

01 - Couple the wheel support (1) in the pillar (2) fastening it through the pin (3), washer (4) and cotter pin (5).

02 - Then, couple the hydraulic cylinder base (6) to the pillar (2) fastening it through the pin (7), flat washer (8), cotter pin (9) and the rod in the wheel support (1) through the pin (10), flat washer (11), and cotter pin (12).

03 - Then, couple the tires (13) to the wheel support (1), fastening it through the screws (14), and nuts (15).

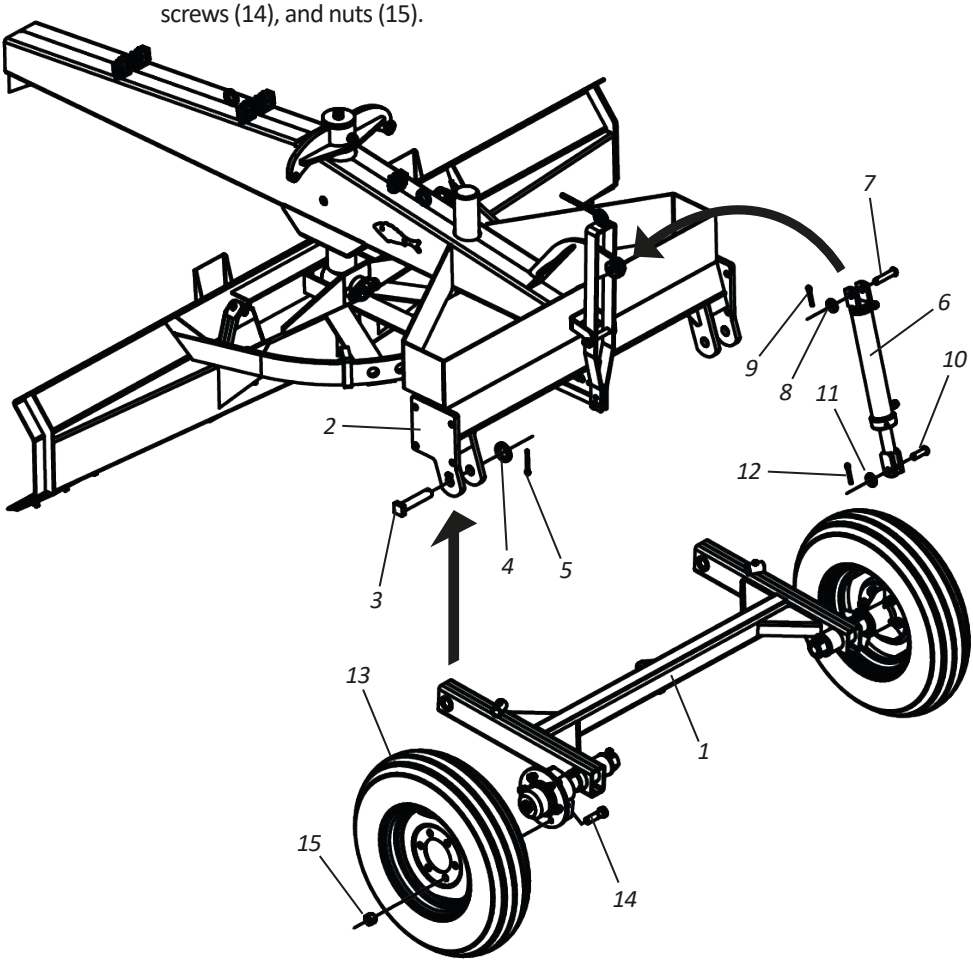

▪ Assembly

• Assembling the wheel support (Hydraulic blade rotation system)

To assemble the wheel support, proceed as follows:

01 - Couple the wheel support (1) in the pillar (2) fastening it through the pin (3), washer (4) and cotter pin (5).

02 - Then, couple the hydraulic cylinder base (6) to the pillar (2) fastening it through the pin (7), flat washer (8), cotter pin (9) and the rod in the wheel support (1) through the pin (10), flat washer (11), and cotter pin (12).

03 - Then, couple the tires (13) to the wheel support (1), fastening it through the screws (14), and nuts (15).

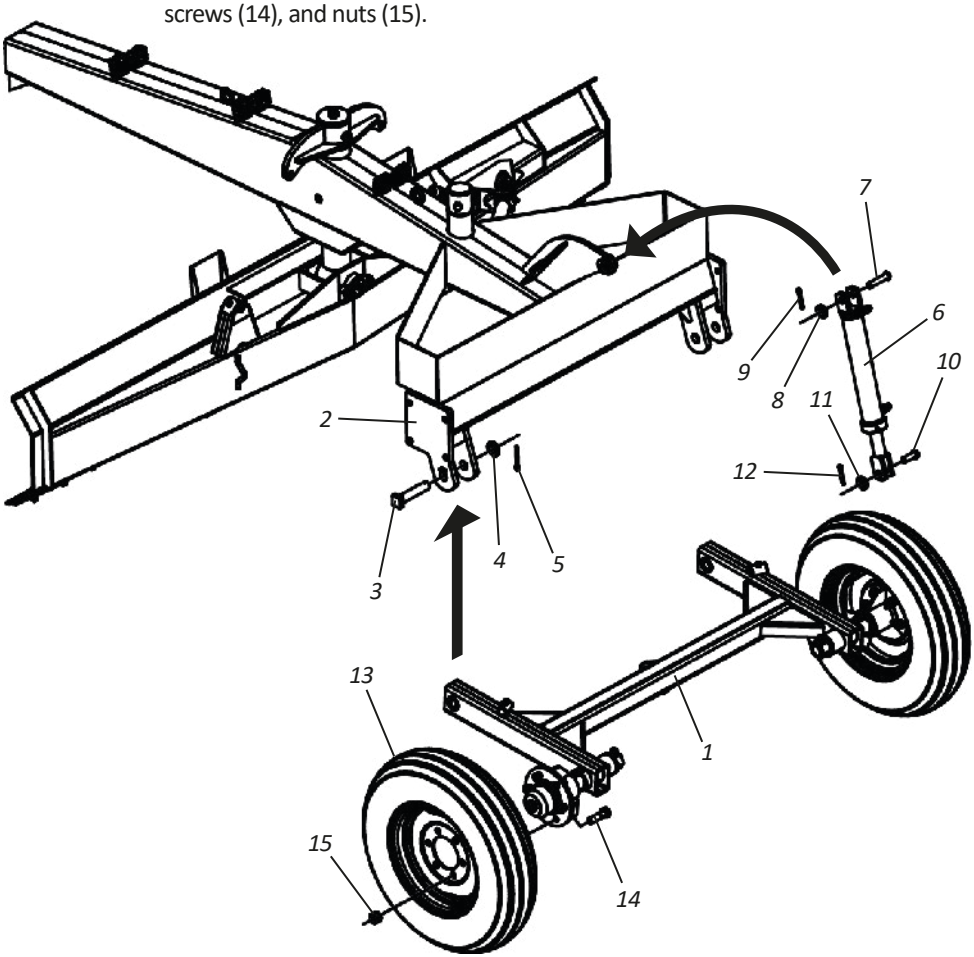

▪ Assembly

• Assembling the iron wheel (Optional) - PNA 3000

To assemble the iron wheel (optional), proceed as follows:

01 - Couple the wheel support (1) in the pillar (2) fastening it through the pin (3), washer (4), and cotter pin (5).

02 - Then, couple the hydraulic cylinder base (6) to the pillar (2) fastening it through the pin (7), flat washer (8), cotter pin (9) and the rod in the wheel support (1) through the pin (10), flat washer (11), and cotter pin (12).

03 - Then, couple the cleaners (13) to the wheel support (1), fastening it through the screws (14).

04 - Then, couple the iron wheels (15) to the wheel support (1) fastening it through the screws (16) and nuts (17).

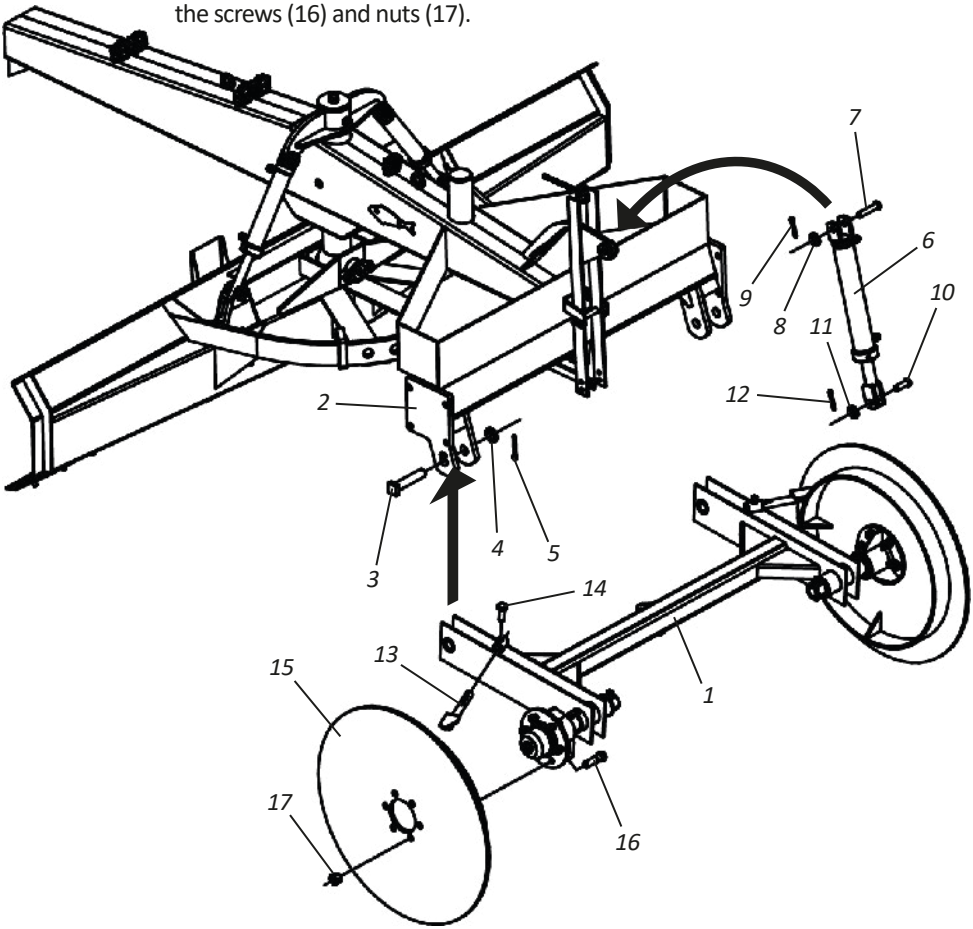

▪ Assembly

• Assembling the transportation kit (Optional) - PNA 3000 with an iron wheel

To assemble the transport kit (optional), proceed as follows:

01 - Couple the wheelset support (1) on the pillar (2) fastening it through the screws (3), lock washers (4), and nuts (5).

02 - Then, couple the rods (6) to the wheelset supports (1), fastening it through the pins (7), flat washers (8), and cotter pin (9).

03 - Then, attach the tires (10) to the rods (6) fastening it through the screws (11) and nuts (12).

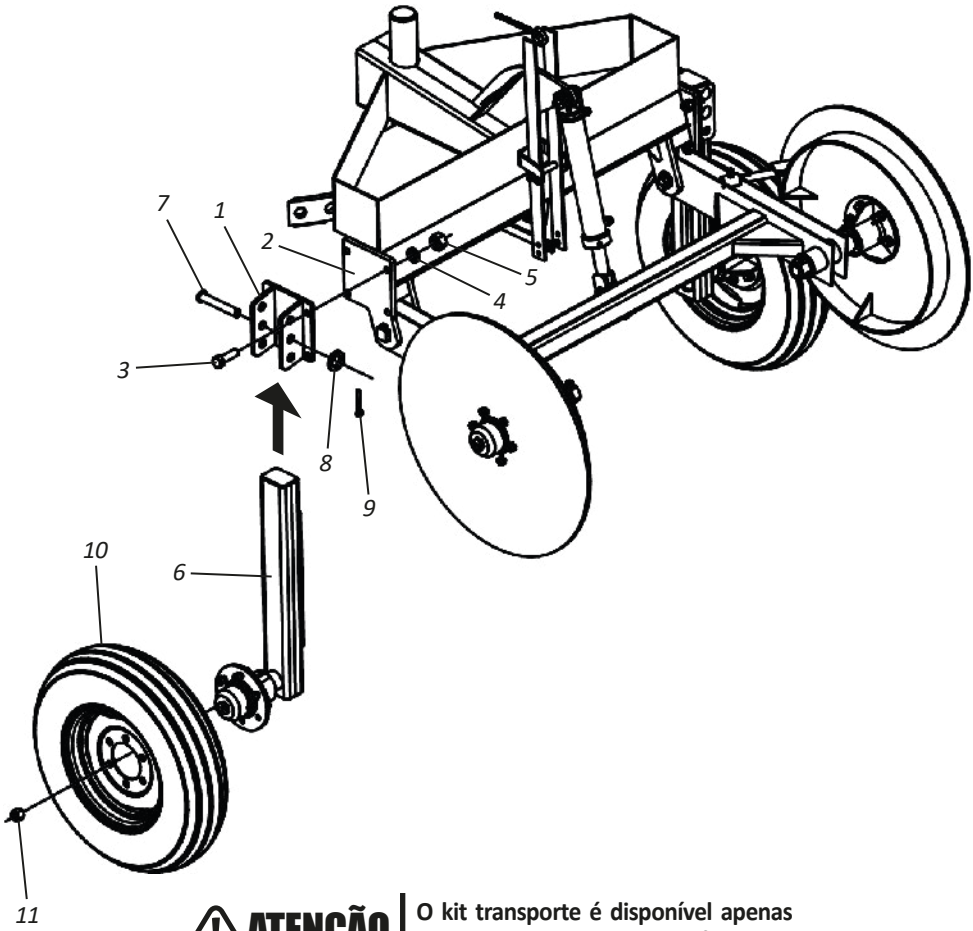

⚠ ATENÇÃO | **O kit transporte é disponível apenas para PNA 3000 com roda de ferro.**

▪ Assembly

• Assembling the hydraulic cylinders

To assemble the hydraulic, proceed as follows:

01 - Attach the base of the hydraulic cylinders (1) to the pillar (2) fastening it through the pins (3), flat washers (4), cotter pins (5), and the rod in the blade (6) through the pins (7), flat washers (8), and cotter pins (9).

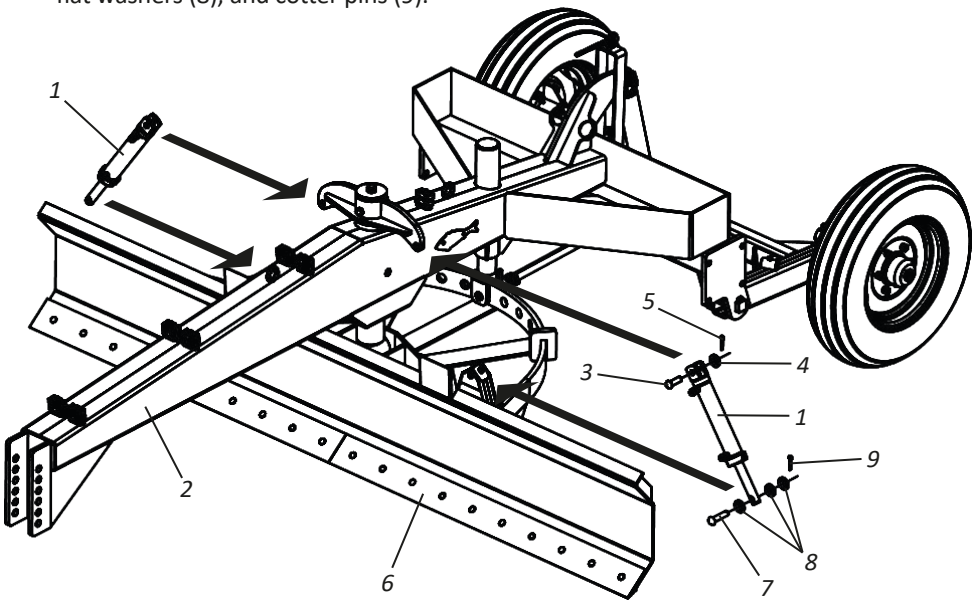

• Assembling the shackle

To assemble the shackle (1), proceed as follows:

01 - Couple the shackle (1) on the pillar (2) through the screws (3), lock washers (4) and nuts (5).

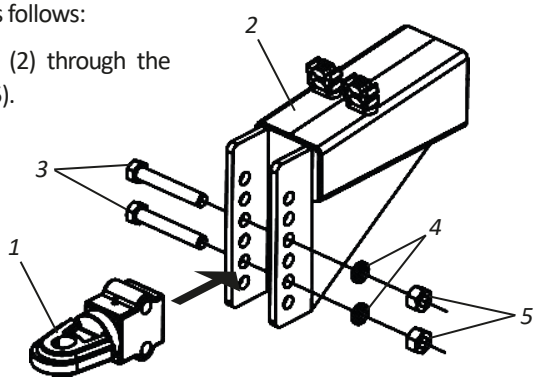

Assembly

- **Assembling the hydraulic system for a tractor with double control without a rotating piston - PNA 3000**

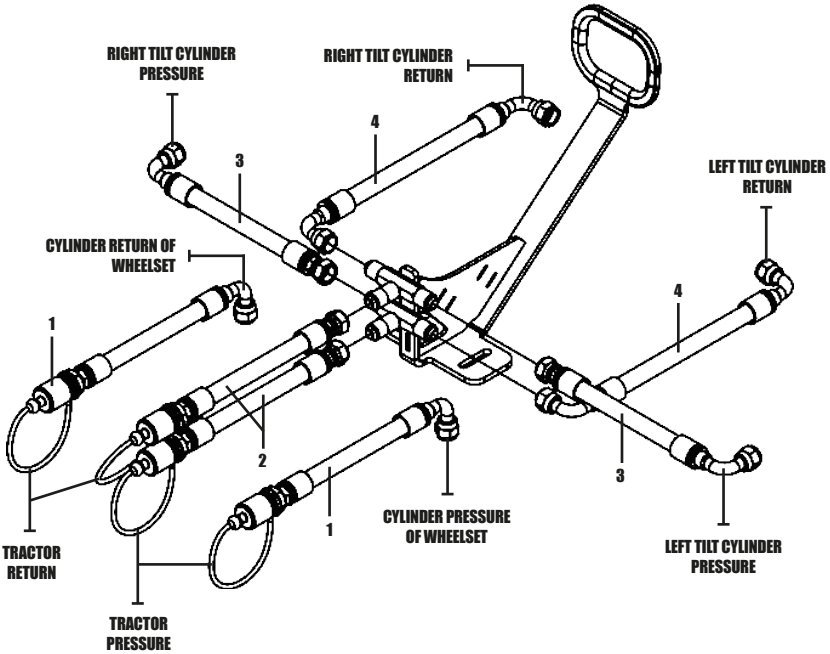

⚠ ATTENTION

Check that the hoses (3 and 4) of the blade tilt cylinders are mounted inverted because the blade tilt cylinders act at the same time, i.e. when one cylinder opens the other closes and vice versa.

Item	Product description	All
1	Hose Hydr. 3/8” x 6600 mm w/ 1TCG and 1TRF w/ male quick hitch	2
2	Hose Hydr. 3/8” x 4500 mm w/ 1TRG and 1TRF w/ male quick hitch	2
3	Hose Hydr. High Pressure 3/8” x 950 mm w/ 1TCG 90° and 1TRG (SAE 100 R2 AT-P.T 4.800 PSI)	2
4	Hose Hydr. High Pressure 3/8” x 750 mm w/ 2TCG 90° (SAE 100 R2 AT-P.T 4.800 PSI)	2

Assembly

- **Assembling the hydraulic system for a tractor with double control without a rotation piston - PNA 5000**

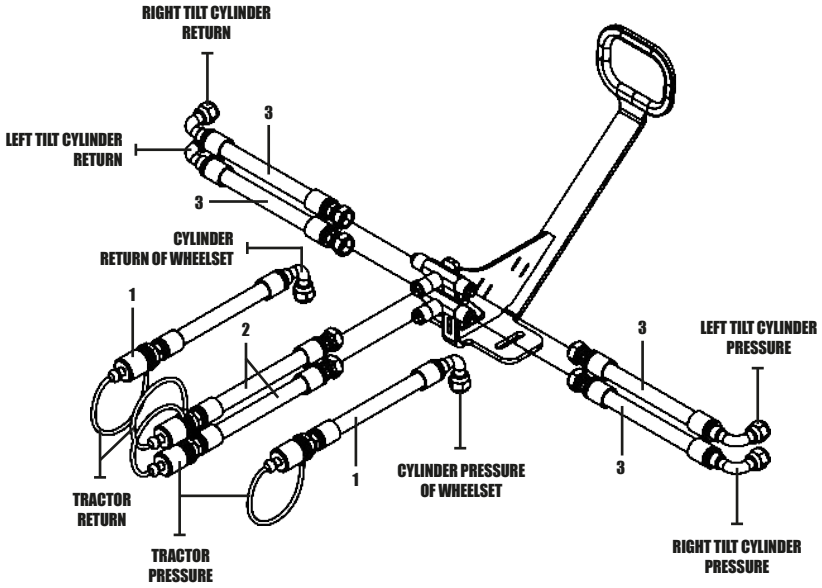

⚠ ATTENTION

Check that the hoses (3) of the blade tilt cylinders are mounted inverted because the blade tilt cylinders act at the same time, i.e. when one cylinder opens the other closes and vice versa.

Item	Product description	All
1	Hose Hydr. 3/8” x 6600 mm w/ 1TCG and 1TRF w/ male quick hitch	2
2	Hose Hydr. 3/8” x 4500 mm c/ 1TRG and 1TRF w/ male quick hitch	2
3	Hose Hydr. High Pressure 3/8” x 950 mm w/ 1TCG 90° and 1TRG (SAE 100 R2 AT-P.T 4.800 PSI)	4

Assembly

- Assembling the hydrauli system for a tractor with triple control with a rotating piston (Optional) - PNA 3000

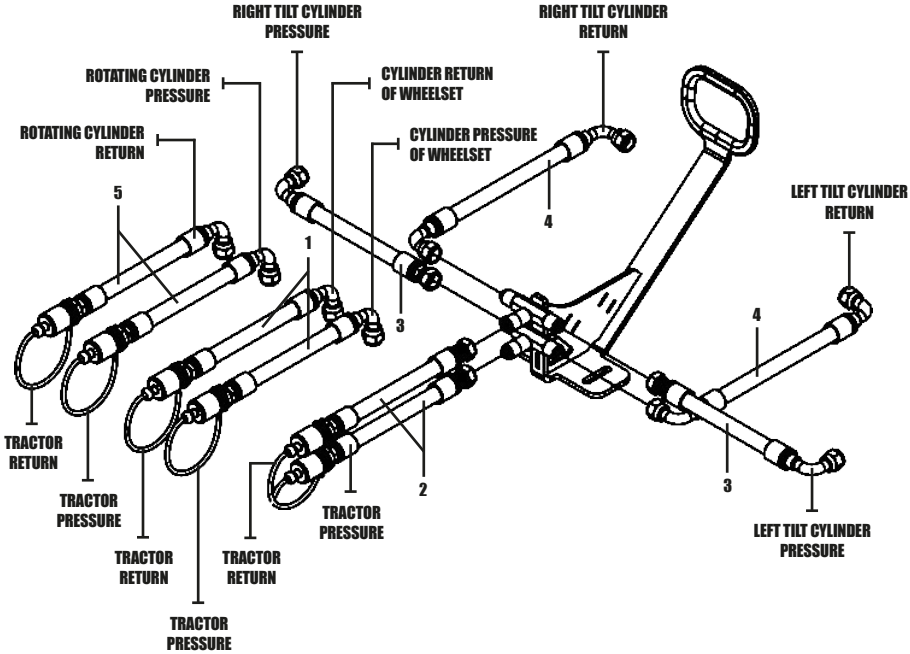

⚠ ATTENTION

Check that the hoses (3 and 4) of the blade tilt cylinders are mounted inverted because the blade tilt cylinders act at the same time, i.e. when one cylinder opens the other closes and vice versa.

Item	Product description	All
1	Hose Hydr. 3/8” x 6600 mm w/ 1TCG and 1TRF w/ male quick hitch	2
2	Hose Hydr. 3/8” x 4500 mm w/ 1TRG and 1TRF w/ male quick hitch	2
3	Hose Hydr. High Pressure 3/8” x 950 mm w/ 1TCG 90° and 1TRG (SAE 100 R2 AT-P.T 4.800 PSI)	2
4	Hose Hydr. High Pressure 3/8” x 750 mm w/ 2TCG 90° (SAE 100 R2 AT-P.T 4.800 PSI)	2
5	Hose Hydr. 3/8” x 6000 mm c/ 1TCG and 1TRF w/ male quick hitch	2

Assembly

- **Assembling the hydraulic system for a tractor with triple control with a rotating piston (Optional) - PNA 5000**

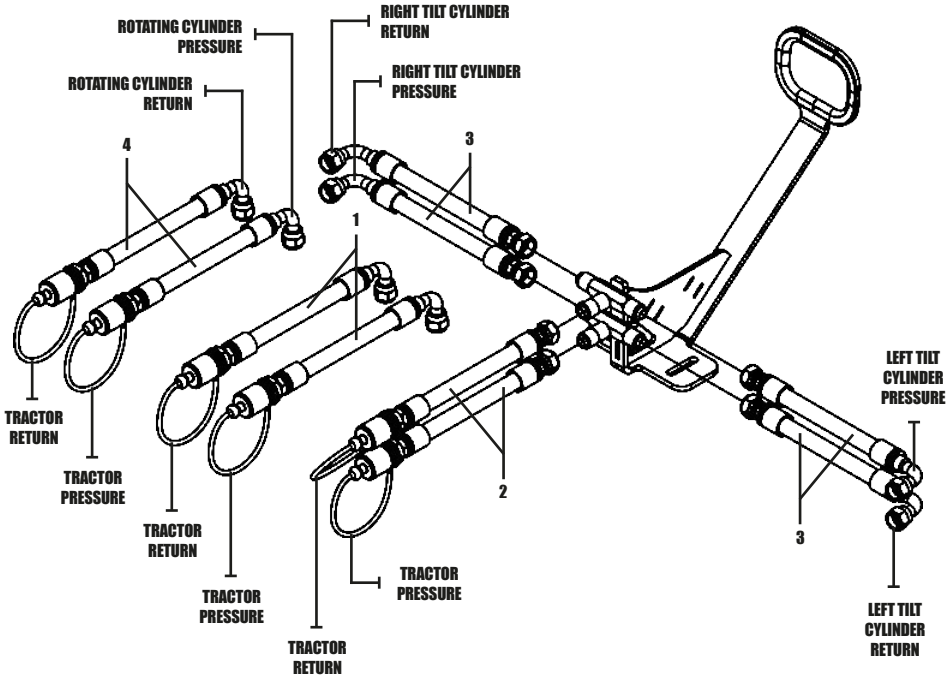

⚠ ATTENTION

Check that the hoses (3) of the blade tilt cylinders are mounted inverted because the blade tilt cylinders act at the same time, i.e. when one cylinder opens the other closes and vice versa.

Item	Product description	All
1	Hose Hydr. 3/8” x 6600 mm w/ 1TCG and 1TRF w/ male quick hitch	2
2	Hose Hydr. 3/8” x 4500 mm w/ 1TRG and 1TRF w/ male quick hitch	2
3	Hose Hydr. High Pressure 3/8” x 950 mm w/ 1TCG 90° and 1TRG (SAE 100 R2 AT-P.T 4.800 PSI)	4
4	Hose Hydr. 3/8” x 6000 mm w/ 1TCG and 1TRF w/ male quick hitch	2

Assembly

- Assembling the electro hydraulic system (Optional) - PNA 3000/5000 - Part I

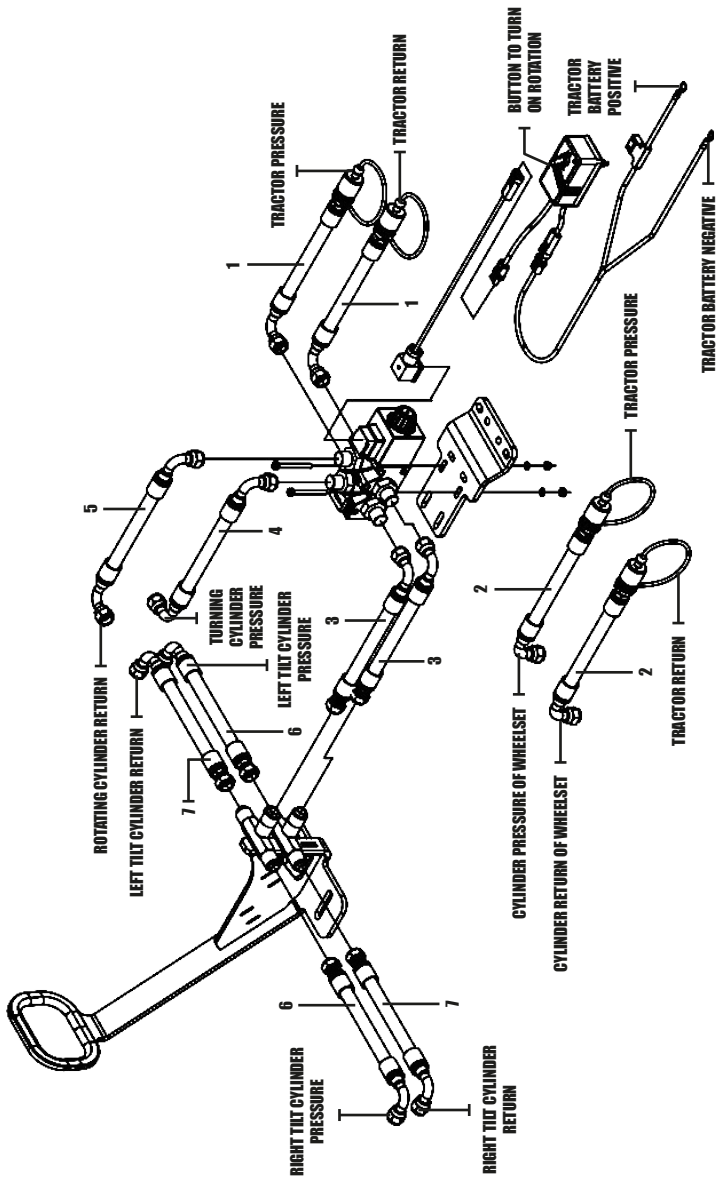

ATTENTION After assembling the eletronic system, perform a general review on the PNA. Retighten all screws and nuts, check all pins, cotter pins, and locks, review all hoses.

NOTE When using a diverter valve (1) supplied by BPN and REXROTH, connect the tractor pressure and return to inlets P1 and P2 indicated on the block (watch the side). When using a diverter valve (1) supplied by HYDAC, connect the tractor pressure and return to the inlets: A1 and A2 indicated on the block (watch the side).

▪ Assembly

• Assembling the electro hydraulic system (Optional) - PNA 3000/5000 - Part II

PNA 3000

Item	Product description	All
1	Hose Hydr. 3/8” x 2200 mm w/ 1TCG and 1TRF w/ male quick hitch	2
2	Hose Hydr. 3/8” x 6000 mm c/ 1TCG e 1TRF w/ male quick hitch	2
3	Hose Hydr. High Pressure 3/8” x 800 mm w/ 1TCG and 1TRG (SAE 100 R2 AT-P.T 4.800 PSI)	2
4	Hose Hydr. High Pressure 3/8” x 2500 mm w/ 2TCG 90° Left (SAE 100 R2 AT-P.T 4.800 PSI)	1
5	Hose Hydr. 3/8” x 2500 mm w/ 2TCG 90° Right (SAE 100 R2 AT-P.T 4.800 PSI)	1
6	Hose Hydr. High Pressure 3/8” x 950 mm w/ 1TCG 90° and 1TRG (SAE 100 R2 AT-P.T 4.800 PSI)	2
7	Hose Hydr. High Pressure 3/8” x 750 mm w/ 1TCG and 1TRG (SAE 100 R2 AT-P.T 4.800 PSI)	2

PNA 5000

Item	Product description	All
1	Hose Hydr. 3/8” x 3200 mm w/ 1TCG and 1TRF w/ male quick hitch	2
2	Hose Hydr. 3/8” x 6000 mm w/ 1TCG and 1TRF w/ male quick hitch	2
3	Hose Hydr. High Pressure 3/8” x 1500 mm w/ 1TCG and 1TRG (SAE 100 R2 AT-P.T 4.800 PSI)	2
4	Hose Hydr. High Pressure 3/8” x 3100 mm w/ 2TCG 90° Left (SAE 100 R2 AT-P.T 4.800 PSI)	1
5	Hose Hydr. High Pressure 3/8” x 3100 mm w/ 2TCG 90° Right (SAE 100 R2 AT-P.T 4.800 PSI)	1
6	Hose Hydr. High Pressure 3/8” x 950 mm w/ 1TCG 90° and 1TRG (SAE 100 R2 AT-P.T 4.800 PSI)	4

Assembly

- Assembling the electronic system (Optional) - PNA 3000/5000

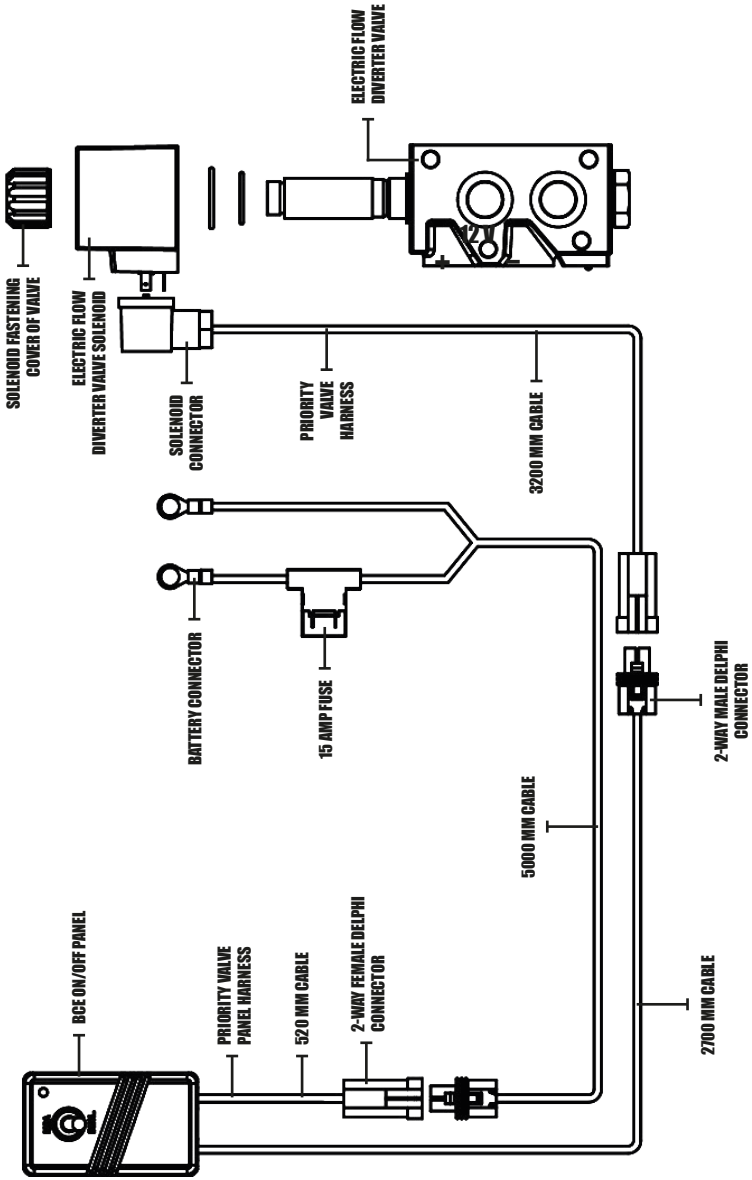

ATTENTION After assembling the electronic system, perform a general review on the PNA. Retighten all screws and nuts, check all pins, cotter pins, and locks, review all hoses.

Assembly

- **Assembling the hydraulic system with Baldan triple control with a rotating piston (Optional) - PNA 3000**

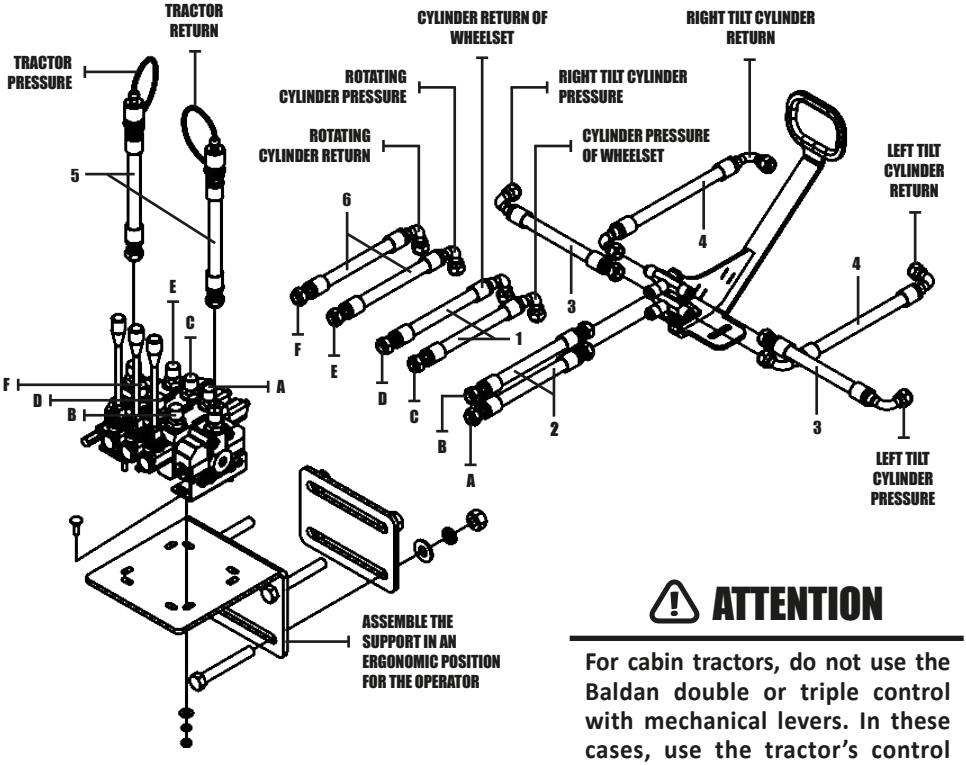

ATTENTION

For cabin tractors, do not use the Baldan double or triple control with mechanical levers. In these cases, use the tractor's control directly.

Item	Product description	All
1	Hose Hydr. High Pressure 3/8" x 6500 mm w/ 1TCG and 1TRG (SAE 100 R2 AT-P.T 4.800 PSI)	2
2	Hose Hydr. High Pressure 3/8" x 4500 mm w/ 2TRG (SAE 100 R2 AT-P.T 4.800 PSI)	2
3	Hose Hydr. High Pressure 3/8" x 950 mm w/ 1TCG 90° and 1TRG (SAE 100 R2 AT-P.T 4.800 PSI)	2
4	Hose Hydr. High Pressure 3/8" x 750 mm w/ 2TCG 90° (SAE 100 R2 AT-P.T 4.800 PSI)	2
5	Hose Hydr. 3/8" x 1800 mm w/ 1TRG and 1TRF w/ male quick hitch	2
6	Hose Hydr. High Pressure 3/8" x 6200 mm w/ 1TCG and 1TRG (SAE 100 R2 AT-P.T 4.800 PSI)	2

Assembly

- **Assembling the hydraulic system with Baldan triple control with a rotating piston (Optional) - PNA 5000**

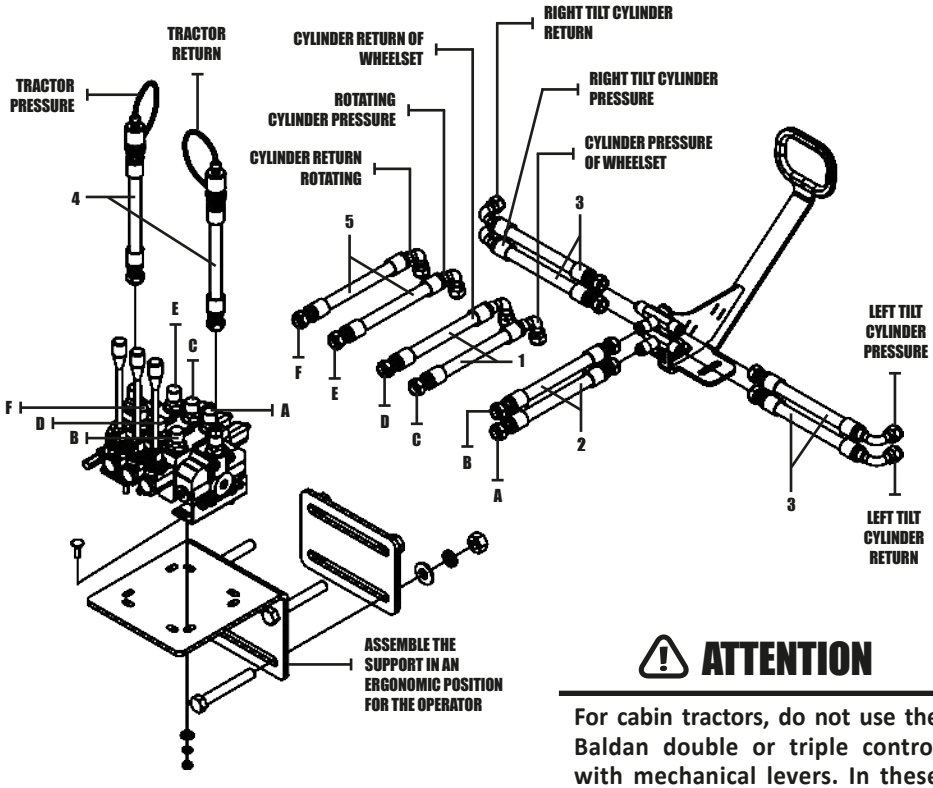

ATTENTION

For cabin tractors, do not use the Baldan double or triple control with mechanical levers. In these cases, use the tractor's control directly.

Item	Product description	All
1	Hose Hydr. High Pressure 3/8" x 6500 mm w/ 1TCG and 1TRG (SAE 100 R2 AT-P.T 4.800 PSI)	2
2	Hose Hydr. High Pressure 3/8" x 4500 mm w/ 2TRG (SAE 100 R2 AT-P.T 4.800 PSI)	2
3	Hose Hydr. High Pressure 3/8" x 950 mm w/ 1TCG 90° and 1TRG (SAE 100 R2 AT-P.T 4.800 PSI)	4
4	Hose Hydr. 3/8" x 1800 mm w/ 1TRG and 1TRF w/ male quick hitch	2
5	Hose Hydr. High Pressure 3/8" x 6200 mm w/ 1TCG and 1TRG (SAE 100 R2 AT-P.T 4.800 PSI)	2

▪ Hitch

• Tractor hitch

To attach the **PNA** to the tractor drawbar, follow these instructions:

⚠ The **PNA** must be assembled by the reseller, by people who are trained and qualified and qualified for this job.

⚠ Before assembling the **PNA**, look for an ideal place for easy identification of parts and its assembly.

⚠ Check that the tractor is equipped with weights or ballasts on the front or on the front wheels, this will give the tractor greater stability and traction on the ground.

⚠ Use PPE (Safety Equipment).

After following the instructions above, proceed as follows:

01 - Level the **PNA** header (1) in to the tractor hitch through the shackle (2), loosening the screws (3), lock washers (4), and nuts (5).

02 - Approach the tractor slowly to the **PNA** in reverse gear, paying attention to the application of the brakes. Finally, couple the **PNA** to the tractor by fastening it through the hitch pin (6) and lock (7).

03 - Após o engate da **PNA** to the tractor's drawbar, attach the hydraulic hoses (8) to the tractor's quick hitch.

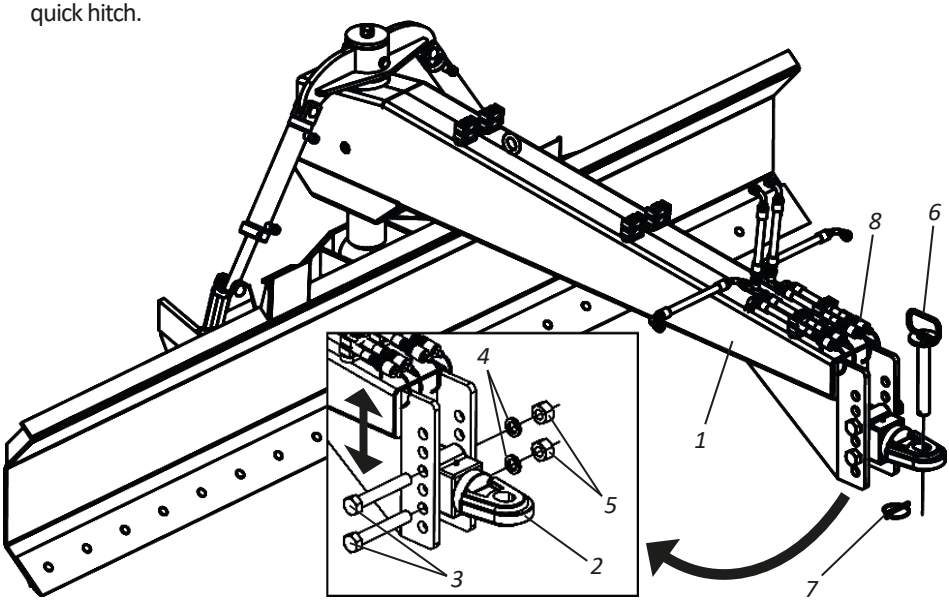

▪ Leveling

• PNA leveling

To level the **PNA,** proceed as follows:

01 - The tractor must be in a flat location.

02 - The level the **PNA** by observing it from the side, longitudinal leveling (length) in relation to the ground.

03 - Otherwise, it must be leveled through the hydraulic cylinder (1), adjusting the wheelset (2) to a height that results in the best leveling of the **PNA**.

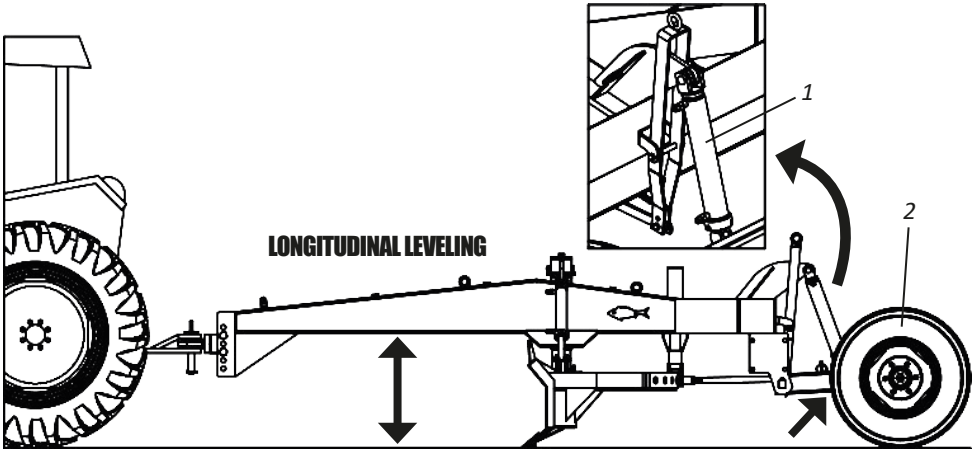

⚠ ATTENTION **Read the tractor manual carefully and make sure that you can work with the drawbar. Baldan is not responsible for any misuse of PNA.**

▪ Adjustments

• Adjusting the horizontal angle of the blade without a rotating piston

The **PNA** blade has a horizontal cutting angle ranging from de 0 to 90°. To adjust the horizontal cutting angle, proceed as follows:

01 - Pull the rope (1) unlocking the blade (2).

02 - Then, tilt the blade (2) until the tip of the side to be displaced touches the ground.

03 - Then move the tractor forward until the blade (2) is in the desired position.

04 - Finish the operation, loosening the rope (1) and slowly moving the tractor until the pin (3) is coupled, fastening the blade.

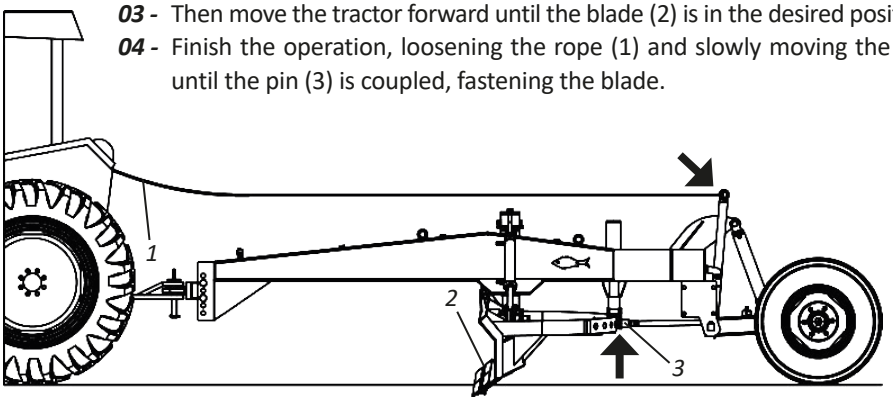

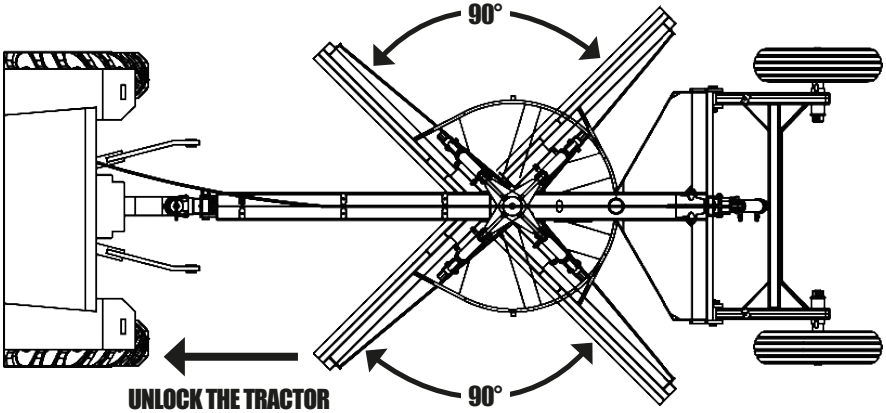

⚠ ATTENTION

The PNA was developed for work on firm soil, without stones and loose soil. We recommend on harder soils, scarifying the ground before using the blade. Do not use the PNA on cobbled and compacted roads, as it increases the wear of the knives and can damage the equipment structure.

▪ Adjustments

• Adjusting the horizontal angle of the blade with a rotating piston (Optional)

The **PNA** blade has a horizontal cutting angle ranging from 0 to 90°. To adjust the horizontal cutting angle, proceed as follows:

01 - Operate the hydraulic cylinder (1) to raise the **PNA** until the blade (2) comes off the ground.
02 - Then, activate the hydraulic (3) to move the blade (2) to the desired position.
03 - Finish the operation by pushing the hydraulic cylinder (1) again to lower the **PNA** until the blade (2) touches the ground.

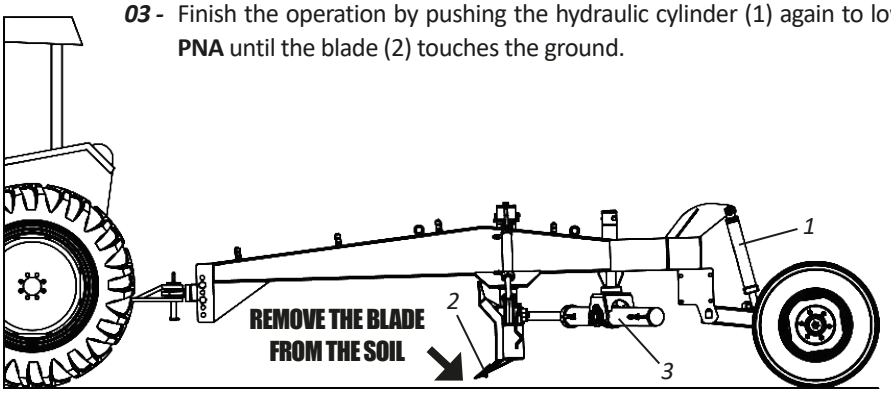

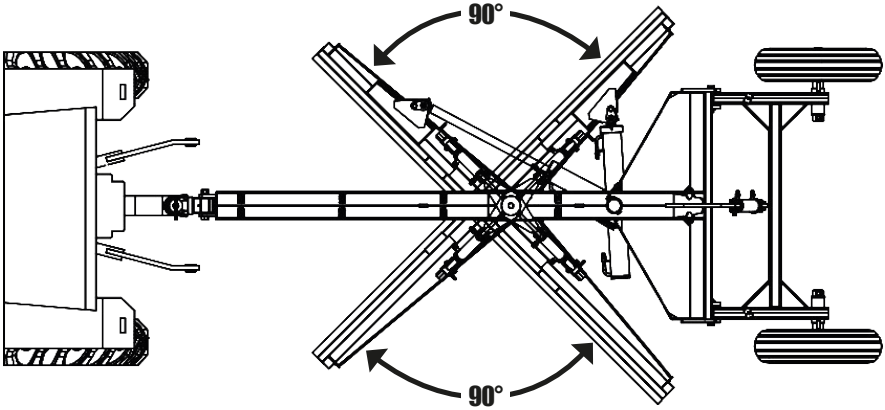

⚠ ATTENTION

The PNA was developed for work on firm soil, without stones and loose soil. We recommend on harder soils, scarifying the ground before using the blade. Do not use the PNA on cobbled and compacted roads, as it increases the wear of the knives and can damage the equipment structure.

▪ Adjustments

• Adjusting the vertical angle of the blade

The **PNA** blade has a vertical cutting angle which, by actuating the hydraulic cylinders (1) ranges from 0 to 25°. To obtain these adjustments at the vertical cutting angle, proceed as follows:

01 - Operate the hydraulic cylinders (1) using the tractor's hydraulic control, making the blade (2) to rise or lower at a maximum angle of 25°.

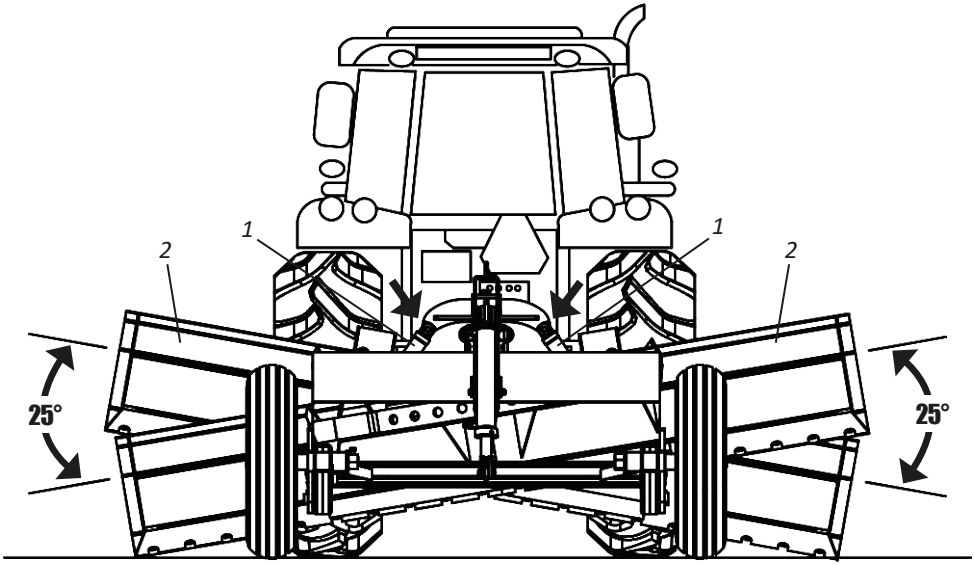

▪ Transportation

• Preparing the PNA 3000 without an iron wheel for transportation

To transport the **PNA 3000 without an iron**, proceed as follows:

01 - Operate the hydraulic cylinder (1) of the wheel axle (2) to lift the **PNA 3000**.

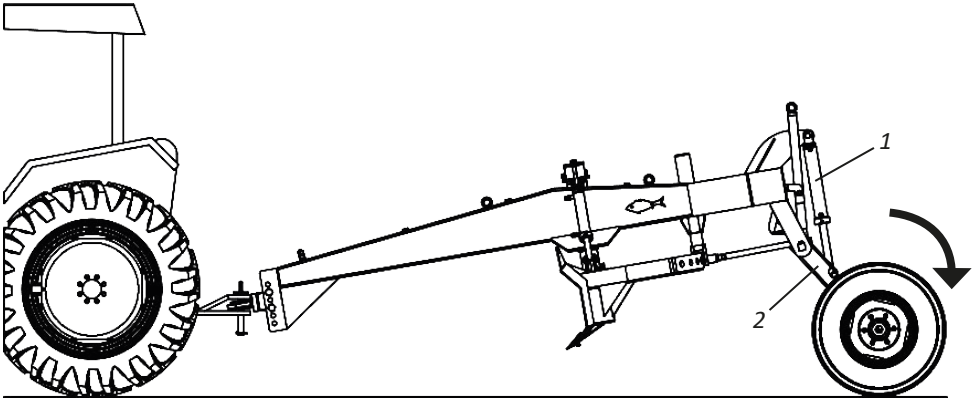

02 - Then turn the blade (3) fully to one side, fastening it in the last hole of the horizontal adjustment, making it easier for the **PNA 3000** to pass through narrow places.

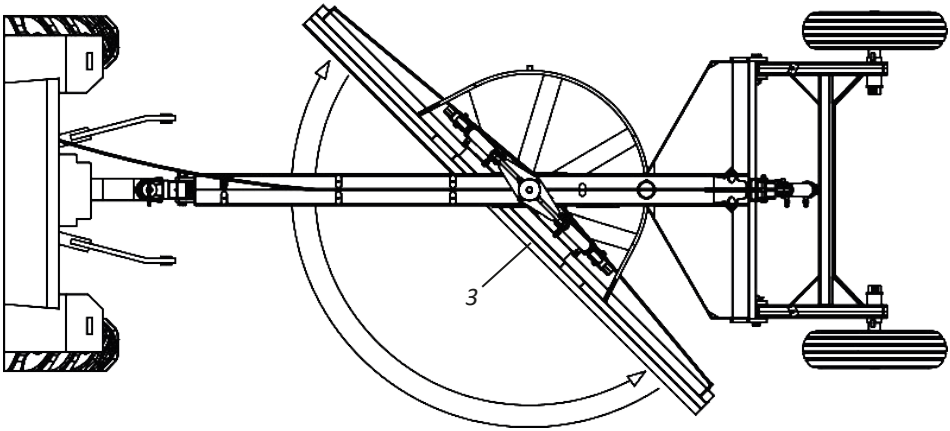

ATTENTION

Before transporting the PNA, make sure that the blade (3) is properly fastened.

IMPORTANT

When making this adjustment, make sure that there are no people near the PNA.

NOTE

Do the same procedure as above to work with the PNA 5000.

▪ Transportation

• Preparing the PNA 3000 with an iron wheel for transportation (Optional) - Part I

Before start preparing the **PNA 3000 with an iron wheel** for transportation, make sure it is in the position below.

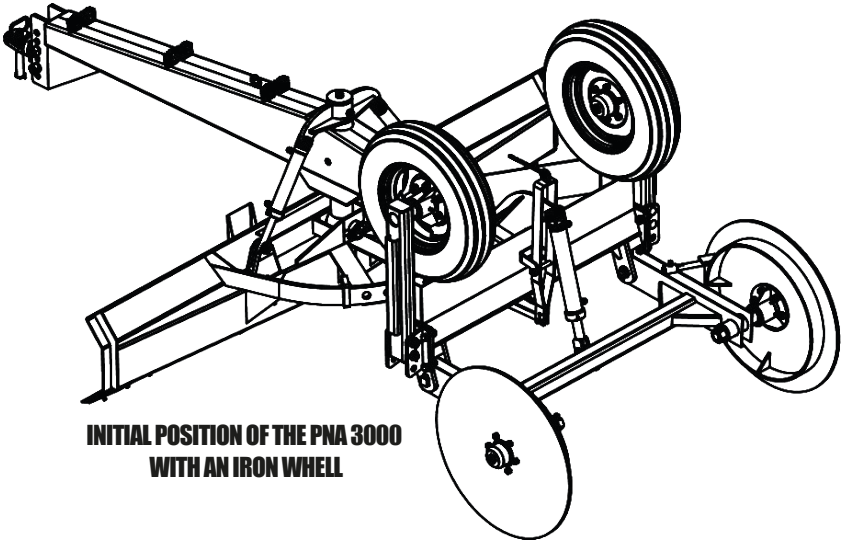

Observing the position above, proceed as follows:

01 - Operate the hydraulic cylinder (1) to lower the axle of the iron wheels (2) of the **PNA 3000**.

02 - Then release the lock (3), remove the flat washer (4), the pin (5) from **point "A"** and lower the wheel support (6).

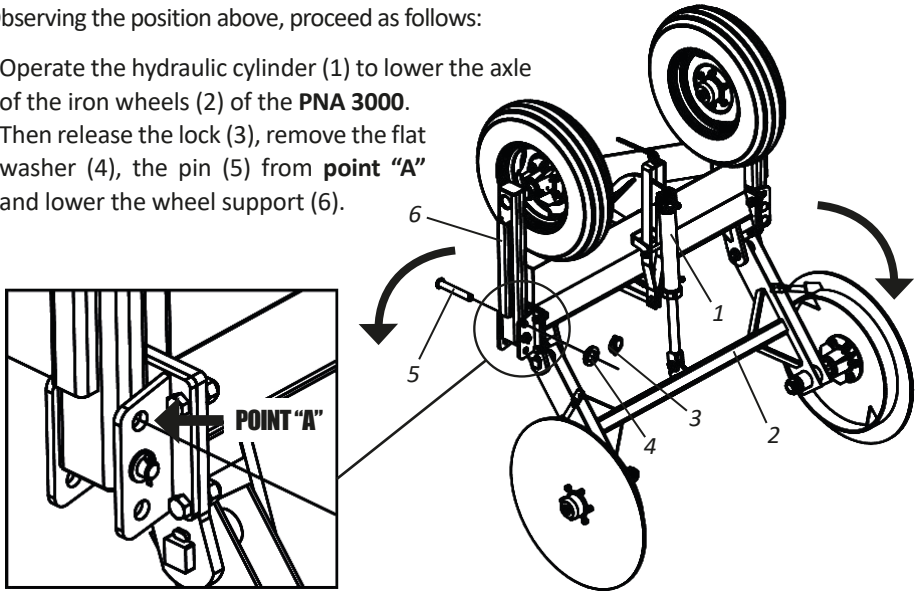

▪ Transportation

- **Preparing the PNA 3000 with an iron wheel for transportation (Optional) - Part II**

03 - Then lock the wheel support (6) to **point "B"**, through .

04 - Then, activate the hydraulic cylinder (1) to raise the axle of the iron wheels (2) of the **PNA 3000.**

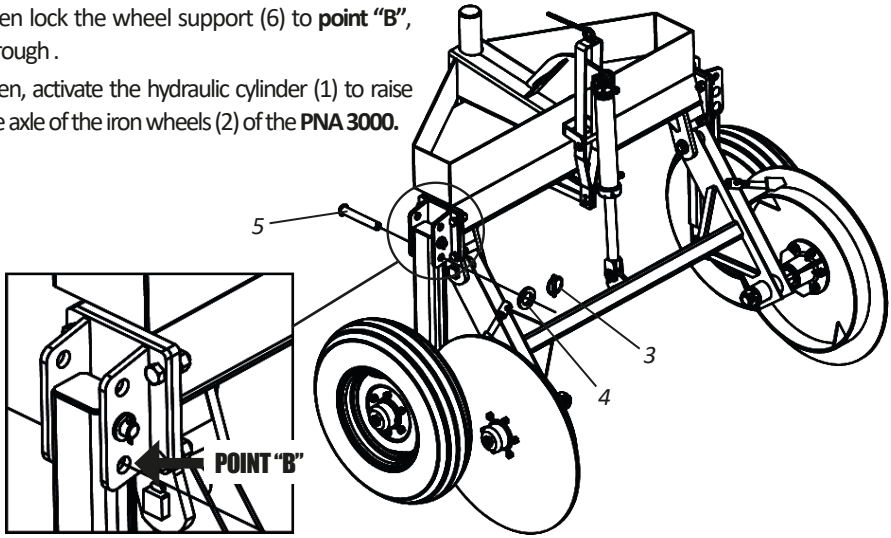

05 - Finish by fully turning the blade (7) to one side, **PNA 3000** to pass through narrow.

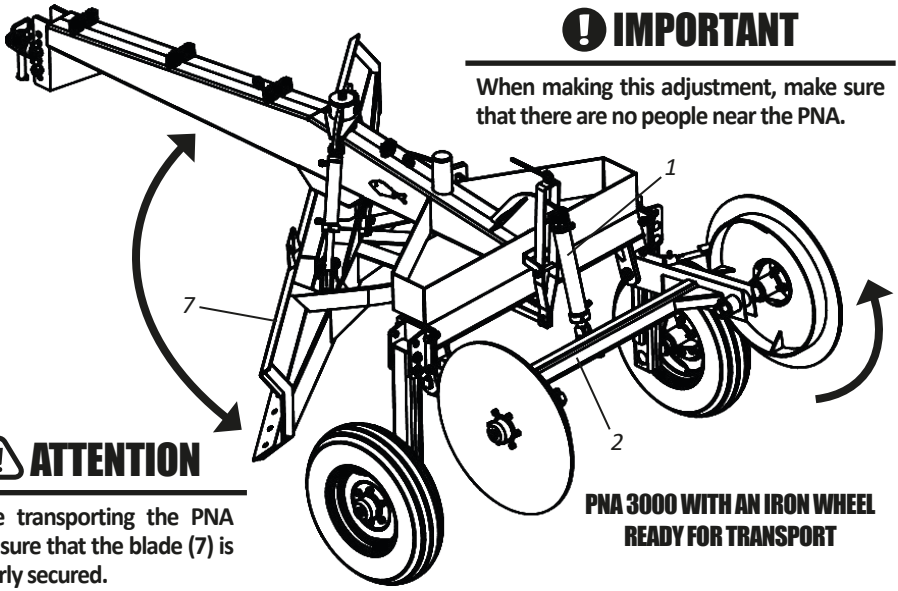

IMPORTANT

When making this adjustment, make sure that there are no people near the PNA.

ATTENTION

Before transporting the PNA make sure that the blade (7) is properly secured.

PNA 3000 WITH AN IRON WHEEL READY FOR TRANSPORT

▪ Work

• Preparing the PNA 3000 whitout an iron wheel for work

Before starting work with the **PNA 3000 without an iron wheel**, proceed as follows:

01 - Turn the blade (1) fully to one side, fastening it in the last hole of the horizontal adjustment, making it easier for the **PNA 3000** to pass through narrow places.

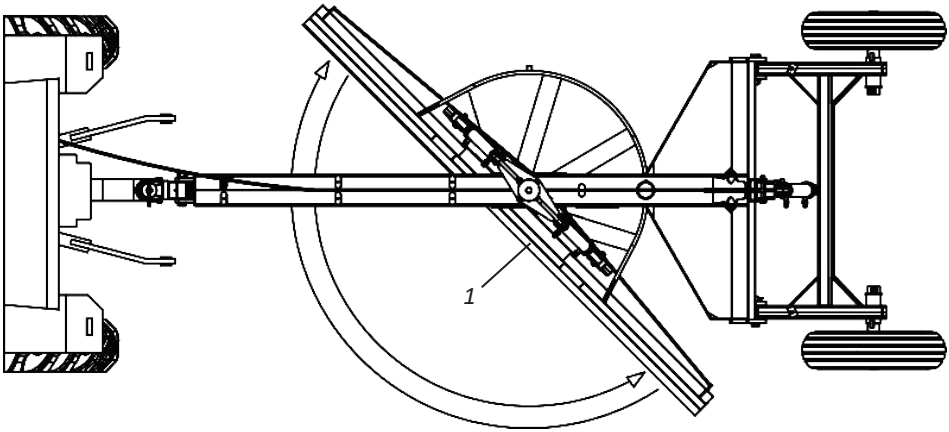

02 - Then activate the hydraulic cylinder (2) of the wheel axle (3) to lower the **PNA 3000**.

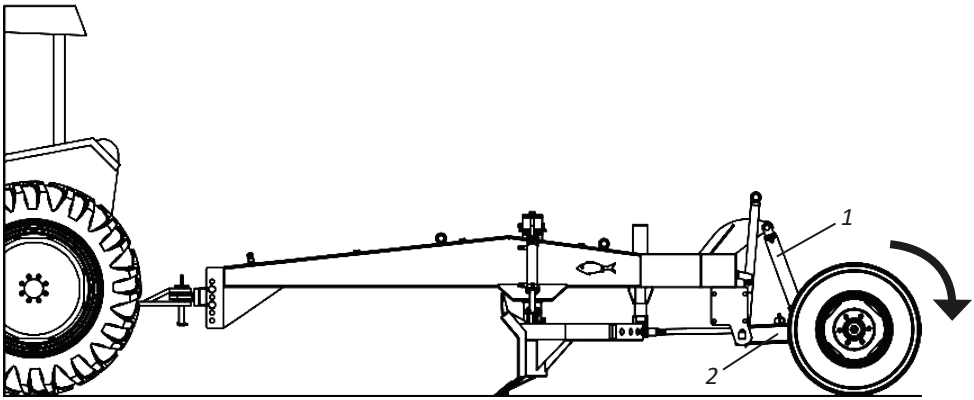

ATTENTION

Before working with the PNA, make sure that the blade (1) is properly fastened.

IMPORTANT

When making this adjustment, make sure that there are no people near the PNA.

NOTE

Do the same procedure as above to work with the PNA 5000.

▪ Work

• Preparing the PNA 3000 with an iron wheel for work (Optional) - Part I

Before you start preparing the **PNA 3000 with an iron wheel** for work, make sure it is in the position below. Observing the position, proceed as follows:

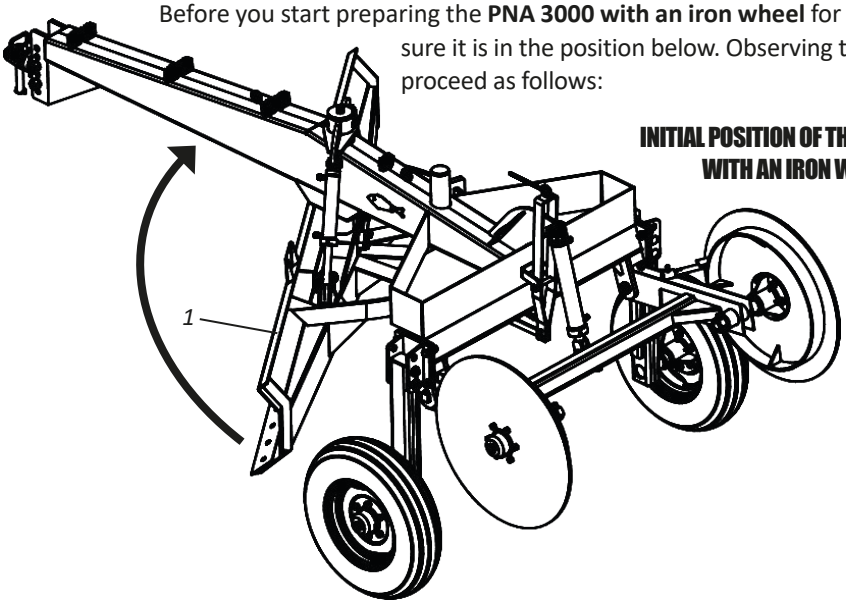

01 - Turn the blade (1) securing it in the central hole of the horizontal adjustment.

02 - Then, activate the hydraulic cylinder (2) to lower the axis of the iron wheels (3) of the **PNA 3000.**

03 - Then, release the lock (4), remove the ring (5), the look (6) from **point "A"** and lift the wheel support (7).

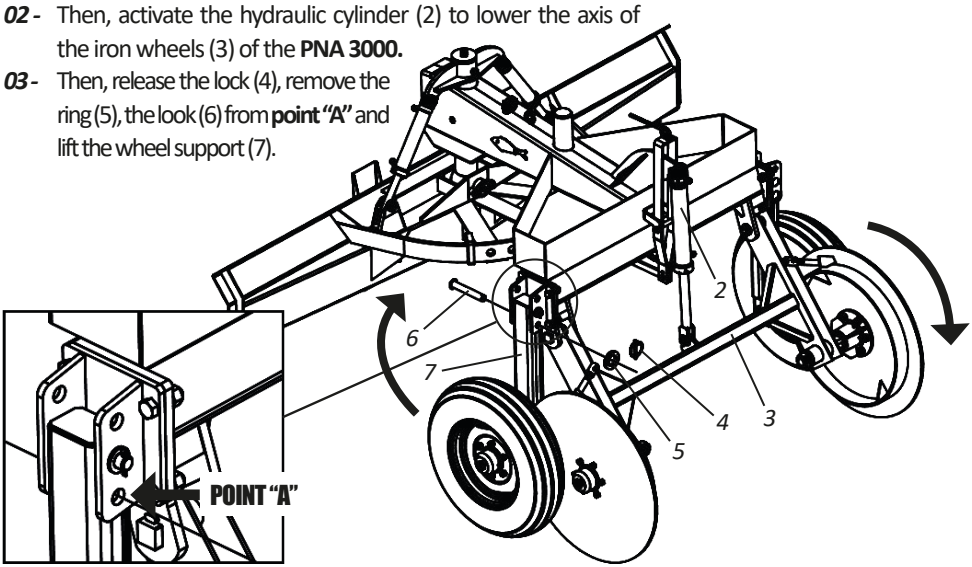

▪ Work

• Preparing the PNA 3000 with an iron wheel for work (Optional) - Part II

04 - Then lock the wheel support (7) to **point "B"**, through the pin (6), flat washer (5), and lock (4).

05 - Finish by activating the hydraulic cylinder (2) to lift the iron wheel axle (3) of the **PNA 3000.**

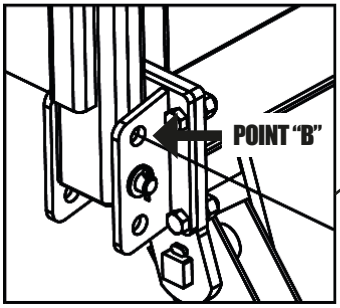

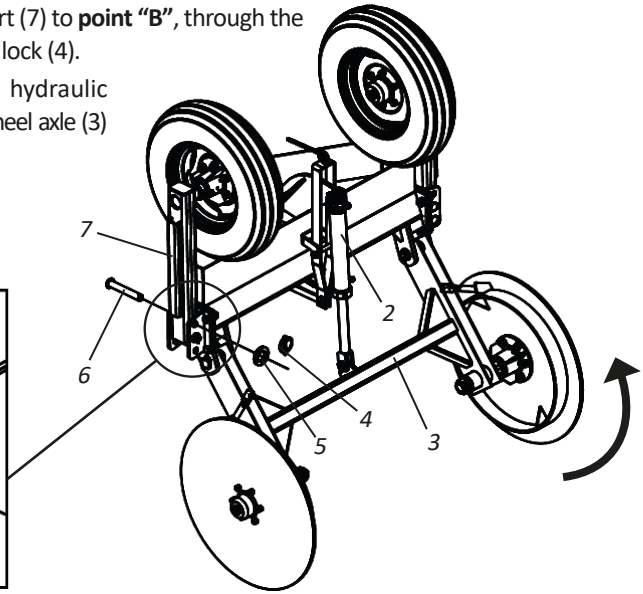

PNA 3000 WITH AN IRON WHEEL READY FOR WORK

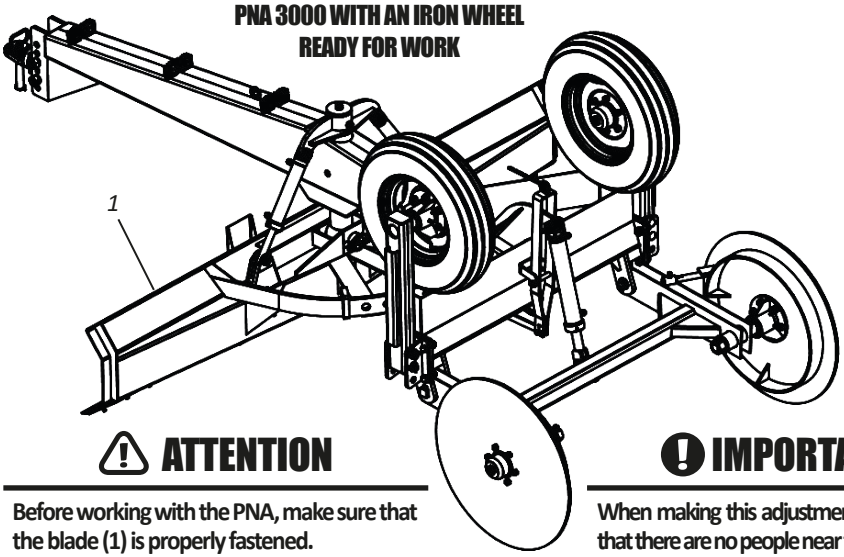

⚠ ATTENTION

Before working with the PNA, make sure that the blade (1) is properly fastened.

❗ IMPORTANT

When making this adjustment, make sure that there are no people near the PNA.

▪ Operations

• Terrace building - Part I

When building a broad base terrace, the number of passes may vary according to the size of the terrace and the skill of the operator.

To build a broad base terrace, the blade should be tilted with the forward edge of the blade lowered down. With this, the blade will open the channel by dragging the loose earth to the crest of the terrace.

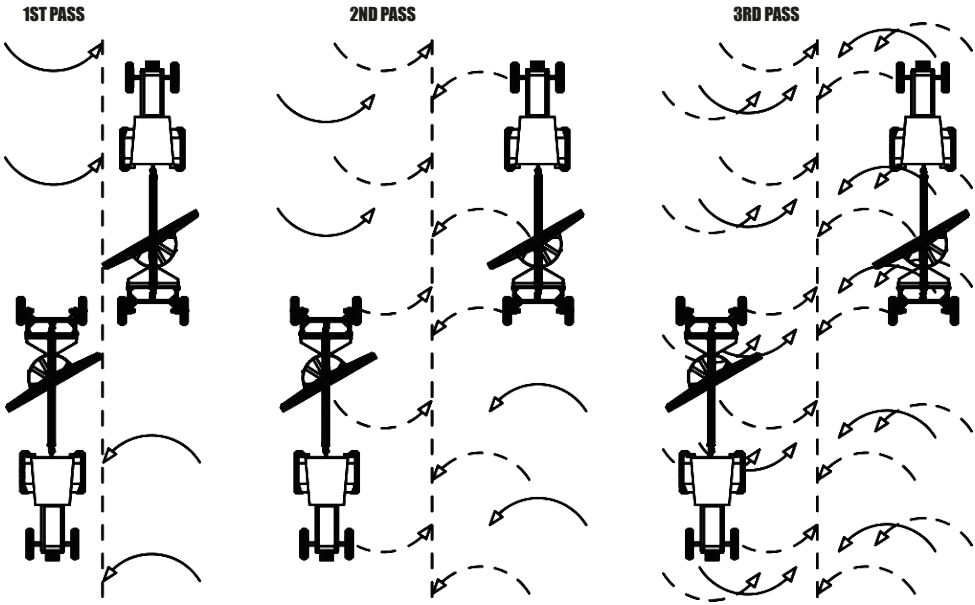

IMPORTANT

As the PNA wheel enters the terrace channel, adjust the cutting depth of the blade, as non-adjustment will make cutting stability and terrace leveling difficult, causing unevenness along the terrace.

▪ Operations

• Terrace building - Part II

⚠ ATTENTION

During the work, keep the 2 tires in contact with the ground, because if the tires are suspended, they will not act as depth limiters, which will result in non-uniformity of the cut in the terrain.

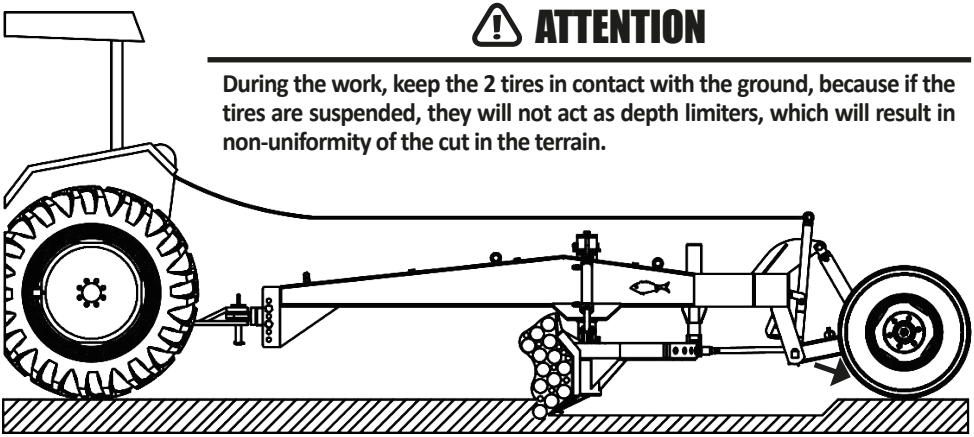

• Terrain leveling

To prevent slipping during work, the **PNA** has a support to place weights. The weight limit to be placed on the **PNA**, varies according to the model as shown in the table below:

Model	Weights
PNA 3000	400 Kg Limit
PNA 5000	800 Kg Limit

⚠ ATTENTION

When placing weights on the PNA, do not exceed the recommended limit as this will damage the structure of the PNA.

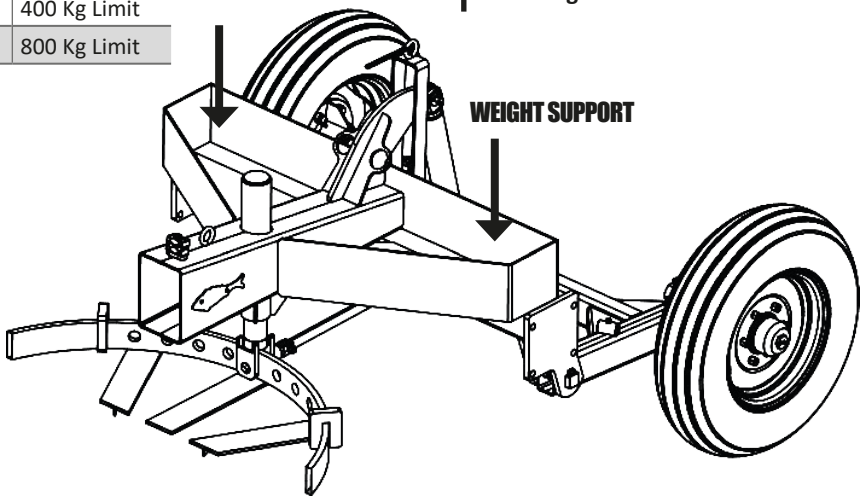

▪ Operations

• Cutting depth

The cutting depth of the **PNA** blade depends on the power of the tractor used. When traveling with the **PNA**, do not let the volume of dragged earth to overflow the blade as shown in the figures bellow.

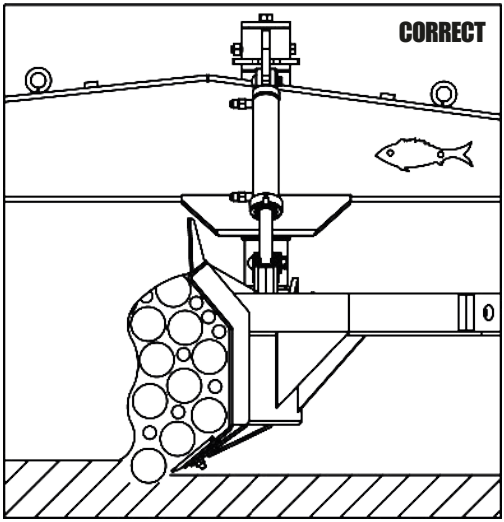

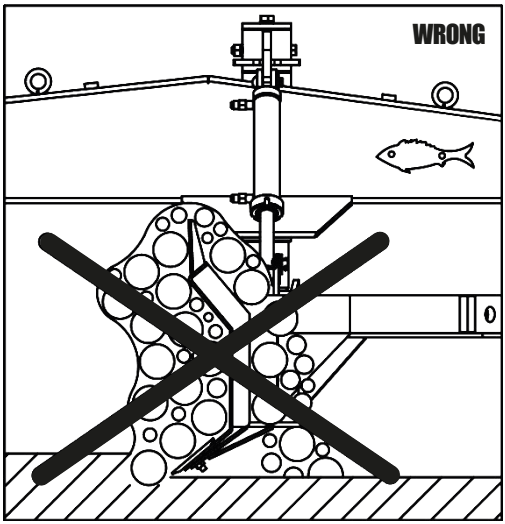

▪ Maintenance

• Recommendations for operation

Preparing the **PNA** and the tractor will save you time as well as provide better field work results. The following suggestions may be helpful to you.

GENERAL RECOMMENDATIONS

01 - Before you start work, do a full review on the **PNA**. In this review, lubricate all points, retighten the nuts and screws, check the locking of the pins and cotter pins.
02 - Check that the **PNA** operator is trained and qualified for the work.
03 - Adjust the tractor according to the contents of the instruction manual, always using the front and rear weights to stabilize the equipment.
04 - Always couple the tractor at idle and very carefully.
05 - Respect the working speed specified on page 10. We do not recommend exceeding the maximum speed to avoid possible damage to the **PNA**.
06 - The **PNA** has several settings, but only local conditions can determine the best setting.
07 - During work do not let people, children, or animals stay within the radius of rotation of the **PNA** blade.
08 - When performing any maintenance on the **PNA**, the engine must be turned off.

If in doubt, never operate or handle the PNA, consult After Sales.
Telephone: 0800-152577 / E-mail: posvenda@baldan.com.br

▪ Maintenance

The **PNA** has been developed to provide you with maximum yield under terrain conditions. Experience has shown that periodic maintenance of certain parts of the **PNA** is the best way to help you have no problems, so we suggest checking.

• Tire pressure

Tires should always be properly calibrated to prevent premature wear due to over or under pressure.

PNA 3000 - TIRES 750 X 16 10 PLIES

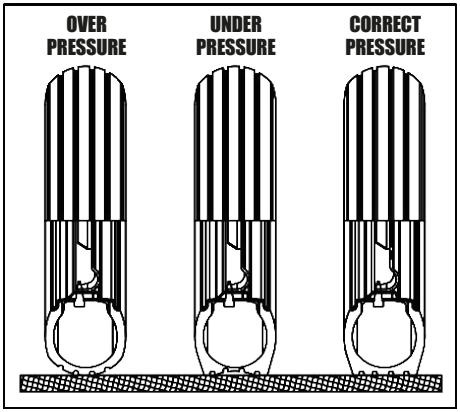

USE 60 LBS/POL²

PNA 5000 - TIRES 12.4.28 X 6 PLIES

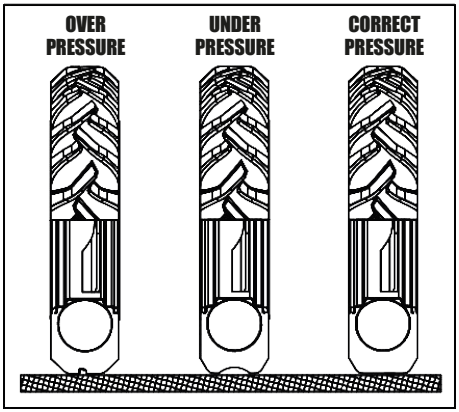

USE 18 LBS/POL² WITH 3/4 WATER
USE 22 LBS/POL² WITHOUT 3/4 WATER

⚠ ATTENTION

Never weld the wheel with a mounted tire, as heat can increase air pressure and cause the tire to explode.
When inflating a tire, position yourself next to the tire, never in front of it.
When inflating the tire, always use a containment device (inflation cage).
Assemble the tires with suitable equipament. The service should be performed only by persons qualified for the job.

IMPORTANT

When calibrating the tires, do not exceed the recommended calibration.

NOTE

Tractor tire pressure should be as recommended by the manufacturer.

▪ Maintenance

The **PNA** has been developed to provide you with maximum yield under terrain conditions. Experience has shown that periodic maintenance of certain parts of the **PNA** is the best way to help you have no problems, so we suggest checking.

⚠ ATTENTION **Constantly check nuts and screws, and retighten them if necessary. General retightening of equipment should be done every 10 working hours.**

• Lubrification

Lubrification is essential for good performance and a longer service life of the **PNA**, contributing to maintenance cost savings.

Before starting the operation, carefully lubricate all grease fittings, always observing the greasing intervals on the following page. Make sure of the quality of the lubrificant, its efficiency and purity, avoiding the use of products contaminated by waterm soil and other agents.

• Grease table and equivalents

Manufacturer	Recommended grease types
Petrobrás	Lubrax GMA-2
Atlantic	Litholine MP 2
Ipiranga	Ipiflex 2
Castrol	LM 2
Mobil	Grease MP
Texaco	Marfak 2
Shell	Alvania EP 2
Esso	Multi H
Bardahl	Maxlub APG-2EP
Valvoline	Palladium MP-2
Petronas	Tutela Jota MP 2 EP
	Tutela Alfa 2K
	Tutela KP 2K

⚠ ATTENTION **For manufacturers and or equivalent brands not listed in the table, see the manufaturer's technical manual.**

▪ Maintenance

- Lubricate every 10 hours of work

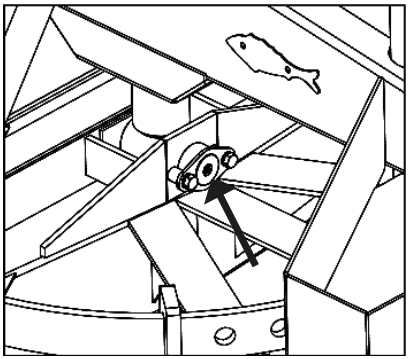
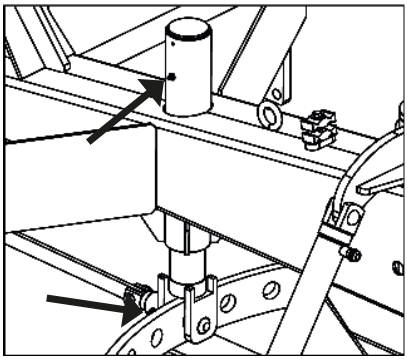
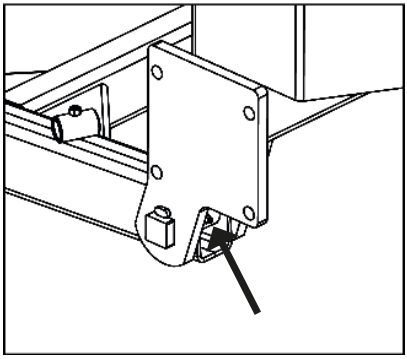
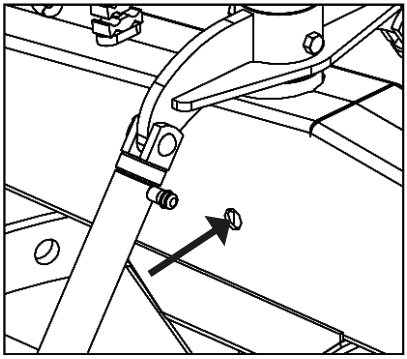
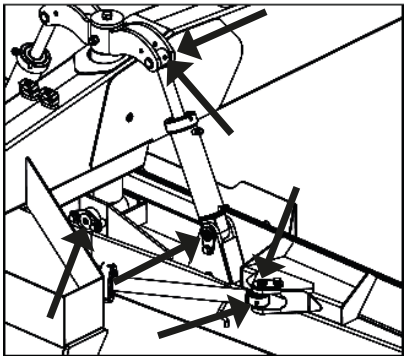
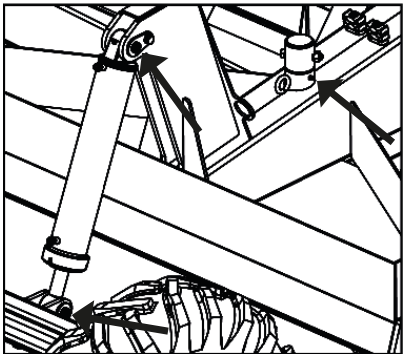

ATTENTION When lubricating the PNA, do not exceed the amount of new grease. Insert a sufficient amount.

▪ Maintenance

- Lubricate every 24 hours of work

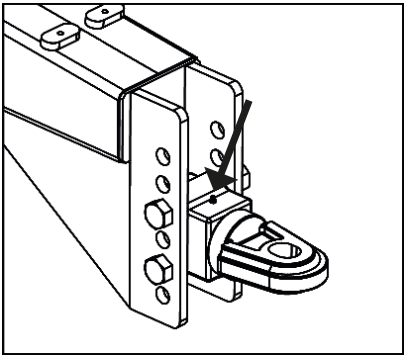

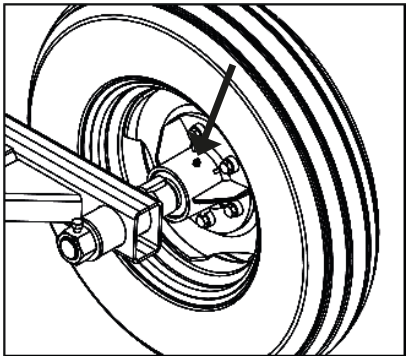

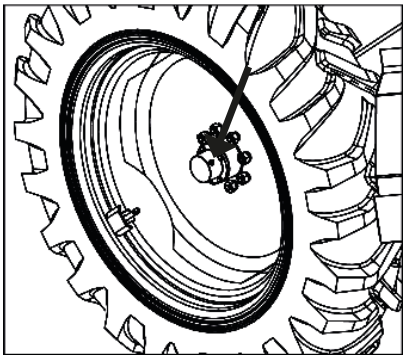

⚠ ATTENTION When lubricating the PNA, do not exceed the amount of new grease. Insert a sufficient amount.

▪ Maintenance

• Operational maintenance - Part I

PROBLEMS	PROBABLE CAUSES	SOLUTIONS
Blade does not articulate and/or does not lift the structure.	Pressure of plugs uneven.	Adjust and change if necessary.
	Hydraulic driver clogged or bent.	Unclog or change driver.
	Insufficient hydraulic control pressure.	Adjust the control via the relief valve using a pressure gauge. Normal pressure 180 Kgf/cm².
	Inverted hoses.	Inspect and assemble hoses correctly.
	Defective hydraulic cylinder.	Replace repair or replace cylinder.
	Tractor with poor hydraulic system.	Check by changing equipment to another suitable tractor.
	Oil level too low.	Fill to level.
Structure goes down without triggering the control.	Hydraulic cylinder with damaged repairs.	Replace repairs.
The blade's hydraulic cylinders are not activating at the same time.	Hoses are not reverse mounted.	Loosen hoses and reverse mount.
Damage tires.	Work area with stones, stumps or crop stubbles that causes cuts to the tires.	Eliminate elements that damage the tires before using the **PNA**.
	Tires are not under the proper pressure causing deformation.	Maintain proper tire pressure.
Strange noise on wheels.	Loose wheels or wheel hub.	Retighten wheel nuts and adjust wheel hub bearings.
	Bearings breakage.	Identify the occurence and replace the damaged parts.
Quick coupling does not fit.	Couplings of different types.	Exchange them for males and females of the same type.
Leak in quick couplers.	Insufficient tightening.	Retighten carefully without excess.
	Damaged repairs.	Replace repairs.

Maintenance

• Operational maintenance - Part II

PROBLEMS	PROBABLE CAUSES	SOLUTIONS
Leak in hydraulic hoses.	Thread sealing material is missing.	Use thread sealant and retighten carefully.
	Insufficient tightening.	Retighten carefully.
	Damaged repairs.	Replace terminals.
Quick couplings do not couple.	Coupling of different brands.	Use couplings of the same brand.
	Mixing needle couplings with ball couplings.	Always use couplings of the same type.
	System pressure.	Relieve pressure to couple.

▪ Maintenance

• Cares

01 - Before each work, check the condition of all pins and screws. Where necessary, retighten or replace them.
02 - Movement speed should be carefully controlled according to the terrain's conditions.
03 - The **PNA** is used in several applications, requiring knowledge and attention in its handling.
04 - Only local conditions can determine the best way to operate the **PNA**.
05 - When assembling or disassembling parts of the **PNA**, use appropriate methods and tools.
06 - Retighten the nuts daily during the first week of use. Then periodically retighten them.
07 - Turn off the tractor completely before any maintenance on the **PNA**.
08 - Carefully observe the lubrification intervals in the various lubrification points of the **DCF-CO**. Respect the lubrification intervals.
09 - After all maintenance work, store the **PNA** in a safe and proper location.
10 - Always check if the parts have wears. If there is a need for replacement, always demand Baldan original parts.

! IMPORTANT | **Proper and periodic maintenance are necessary to ensure the long life of the PNA.**

▪ Maintenance

• General cleaning

01 - When storing the **PNA**, perform a general cleaning and wash it thoroughly with water only. Make sure the paint has not worn out, if this has happened, apply a general coat and protective oil and fully lubrificate the **PNA**. Do not use burned oil or other abrasive.

02 - Completely lubrificate the **PNA**. Check all moving parts of the **PNA**, for wear and tear or gaps, make the required adjustments or parts replacements, leaving the machine ready for the next work.

03 - Replace all damaged or missing stickers, especially warnings. Make everryone aware of their importance and the dangers of accidents when instructions are not followed.

04 - After all maintenance precautions, store your **PNA** in a plain surface, at a covered and dry location, away from animals and children.

05 - We recommend washing the **PNA** with water only on the beginning of works.

⚠ ATTENTION | **Do not use abrasives or chemical products to wash the PNA, as it may damage its painting and adhesives.**

• Planer Preservation - Part I

To extend the useful life and appearance of the **PNA,** follow the instructions bellow:

01 - Wash and clean all **PNA** components during and at the end of the work season.

02 - Use neutral products to clean the **PNA** following the safety and handling guidelines provided by the manufacturer.

03 - Always carry out maintenance during the periods indicated in this manual.

• Planer Preservation - Part II

The practices and care below make a difference for the conservation of the **PNA** if adopted by the owner or operator**.**

01 - Be careful when performing high-pressure washing; do not direct the water jet to connectors and electrical components. Isolate all electrical components;

02 - Use only NEUTRAL detergent and water (pH equal to 7);

03 - Apply the product, strictly following the manufacturer's instructions, on a wet surface and in the correct sequence, respecting the application and washing times;

▪ Maintenance

04 - Stains and dirt not removed with the products should be removed with the aid of a sponge.

05 - Rinse the machine with clean water to remove any chemical residues.

06 - Do not use: - Detergents with a basic active ingredient (pH less than 7), can damage/stain the rear blade paint.

- Detergents with acid active ingredients (lower than 7 pH), act as zinc stripper/ remover (parts protection against oxidation).

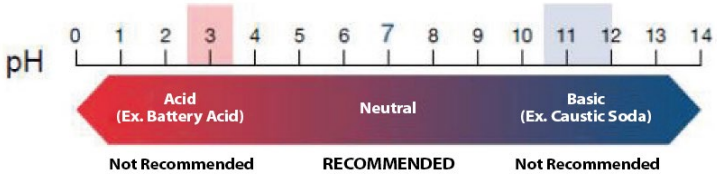

07 - Allow the machine to dry in the shade so that it does not accumulate water in its components. Very fast drying can cause stains on your paint.

08 - After drying, lubrificate all chains and greases according to the recommendations in the operator's manual.

09 - Spray the whole machine, especially zinc parts, with protective oil, following the manufacturer's application instructions. The protective also prevents dirt from adhering to the machine, facilitating subsequent washings.

10 - Observe curing (absorption) time and application intervals as recommended by the manufacturer.

⚠ ATENTION | **Do not use any other type oil to protect the distributor (used hydraulic oil, burnt oil, diesel, castor oil, kerosene, etc.).**

! IMPORTANT | **We recommend the following protective oils:**
- Bardahl: Agro protective 200 or 300
- ITWChemical: Zoxol DW - Series 4000

NOTE | **Ignoring the conservation measures mentioned above may result in loss of warranty for painted or zinc-coated components which may suffer oxidation (rust).**

▪ Optional

PNA has options that can be purchased according to the need of work.

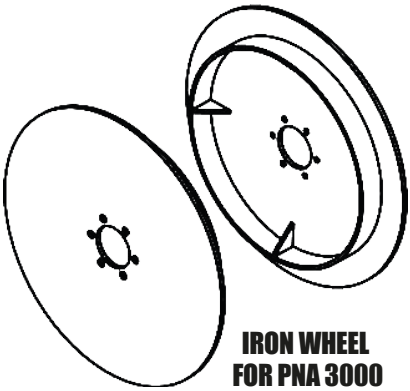

IRON WHEEL
FOR PNA 3000

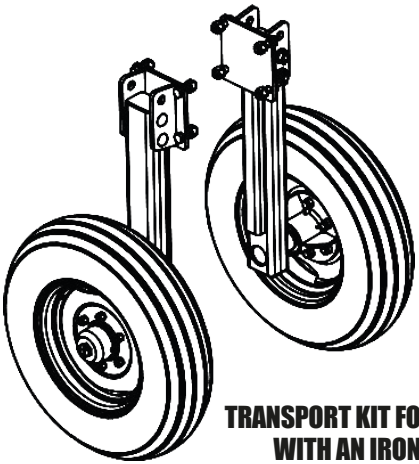

TRANSPORT KIT FOR PNA 3000
WITH AN IRON WHEEL

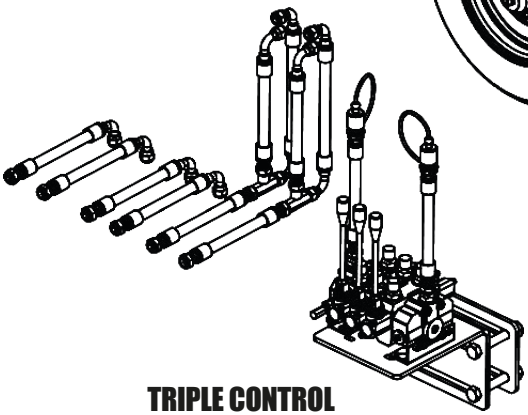

TRIPLE CONTROL

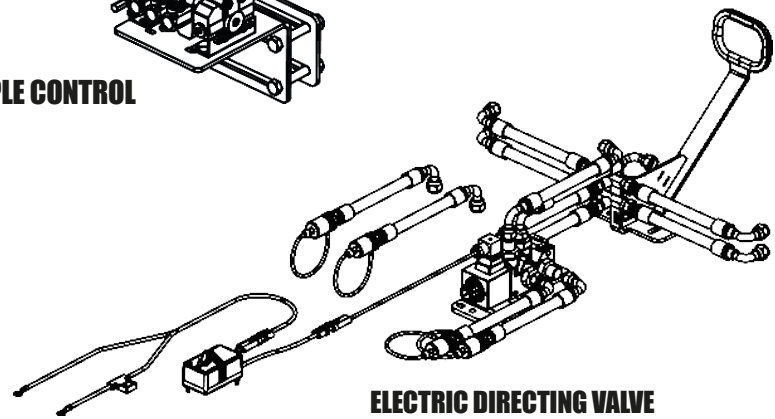

ELECTRIC DIRECTING VALVE

Identification

• Identification plate

In order to consult the parts catalog or ask Baldan for service, always indicate the model (1), serial number (2) and manufacturing date (3), which is on the nameplate of your **PNA**.

ATTENTION

The drawings in this Instruction Manual are merely illustrative.

CONTACT

In case of doubts, never operate or handle your equipment without referring to Post-Sales.
Telephone: 0800-152577
e-mail: posvenda@baldan.com.br

PUBLICATIONS

Code: 60550104698 | CPT: PNA11522A

PEÇAS ORIGINAIS BALDAN
ORIGINAL PARTS • PIEZAS ORIGINALES

Identification

• Product Identification

Please make the correct identification of the data below, to always have information about the service life of your equipment.

Owner: _____

Dealer: _____

Property: _____

City: _____

State: _____

Certificate of Warranty no.: _____

Implement: _____

Serial No: _____

Purchase Date: _____

Invoice: _____

▪ Notes

Certificate of Warranty

BALDAN

BALDAN IMPLEMENTOS AGRÍCOLAS S/A ensures the dealer normal performance of the implement for a period of six (6) months as of the delivery date on the retail invoice to the first final consumer. During this period, **BALDAN** undertakes to repair defects in material and/or of manufacture of its liability, including labor, freight and other expenses of the dealer's liability.

In the warranty period, request and replacement of eventual defective parts shall be made to the dealer of the area, who will submit the faulty piece for **BALDAN** analysis. When this procedure is not possible and the resolving capacity of the dealer is exhausted, the dealer will request the support of **BALDAN Technical Assistance** through a specific form distributed to dealers. After analyzing the replaced items by Baldan Technical Assistance, and concluding that it is not a warranty, then the dealer will be responsible for the costs related to the replacement; as well as material expenses, travel including accommodation and meals, accessories, lubricant used and other expenses arising from the call out to Technical Assistance, and Baldan company is authorized to carry the respective invoice in the name of the resale. Any repair carried in the product within the dealer warranty deadline will only be authorized by **BALDAN** upon previous budget presentation describing parts and work to be performed.

The product is excluded from this term if it is repaired or modified by representatives not belonging to the **BALDAN** dealer network, as well as the application of non-genuine parts or components to the user's product. This warranty is void where it is found that the defect or damage is caused by improper use of the product, failure to follow instructions or inexperience of the operator.

It is agreed that this warranty does not cover tires, polyethylene tanks, cardan, hydraulic components, etc., which are equipment guaranteed by their manufacturers. Manufacturing and/or material defects, object of this warranty term, will not constitute, under any circumstances, grounds for termination of a purchase agreement, or for indemnification of any nature.

BALDAN reserves the right to change and/or perfect the technical characteristics of its products, without previous notice, and without obligation to proceed in the same way with the products previously manufactured.

▪ Inspection and Delivery Certificate

SERVICE BEFORE DELIVERY: This implement was carefully prepared by the sale organization, with all its parts inspected according to the manufacturing prescriptions.

DELIVERY SERVICE: The user was informed about the current warranty terms and instructed on the usage maintenance precautions.

I confirm that the user has been informed about the current warranty terms and instructed on the usage maintenance precautions.

Implement: _____ Serial Number: _____

Date: _____ Tax Number: _____

Dealer: _____

Telephone: _____ CEP: _____

City: _____ State: _____

Owner: _____

Telephone: _____

Address: _____ Number: _____

City: _____ State: _____

E-mail: _____

Sale date: _____

Signature / Dealer Stamp _____

1st copy - Owner

▪ Inspection and Delivery Certificate

SERVICE BEFORE DELIVERY: This implement was carefully prepared by the sale organization, with all its parts inspected according to the manufacturing prescriptions.

DELIVERY SERVICE: The user was informed about the current warranty terms and instructed on the usage maintenance precautions.

I confirm that the user has been informed about the current warranty terms and instructed on the usage maintenance precautions.

Implement: _____ Serial Number: _____

Date: _____ Tax Number: _____

Dealer: _____

Telephone: _____ CEP: _____

City: _____ State: _____

Owner: _____

Telephone: _____

Address: _____ Number: _____

City: _____ State: _____

E-mail: _____

Sale date: _____

Signature / Dealer Stamp _____

2nd copy - Dealer

▪ Inspection and Delivery Certificate

SERVICE BEFORE DELIVERY: This implement was carefully prepared by the sale organization, with all its parts inspected according to the manufacturing prescriptions.

DELIVERY SERVICE: The user was informed about the current warranty terms and instructed on the usage maintenance precautions.

I confirm that the user has been informed about the current warranty terms and instructed on the usage maintenance precautions.

Implement: _____ Serial Number: _____

Date: _____ Tax Number: _____

Dealer: _____

Telephone: _____ CEP: _____

City: _____ State: _____

Owner: _____

Telephone: _____

Address: _____ Number: _____

City: _____ State: _____

E-mail: _____

Sale date: _____

Signature / Dealer Stamp _____

3rd copy - Manufacturer (Please send completed within 15 days).

1.74.05.0059-5

AC MATÃO
ECT/DR/SP

RESPONSE CARD

NO STAMPING IS REQUIRED

THE STAMP WILL BE PAID BY:

BALDAN IMPLEMENTOS AGRÍCOLAS S/A.
Av. Baldan, 1500 | Nova Matão | CEP: 15993-900 | Matão-SP. | Brasil
Tel: (16) 3221-6500 | Fax: (16) 3382-6500
www.baldan.com.br | email: sac@baldan.com.br
Export: Tel: +55 (16) 3221-6500 | Fax: +55 (16) 3382-4212 | 3382-2480
email: export@baldan.com.br

BALDAN

Avenida Baldan, 1500
Nova Matão
15.993-900
Matão/SP - Brasil
sac@baldan.com.br
export@baldan.com.br

+55 16 3221 6500
baldan.com.br