Instruction Manual

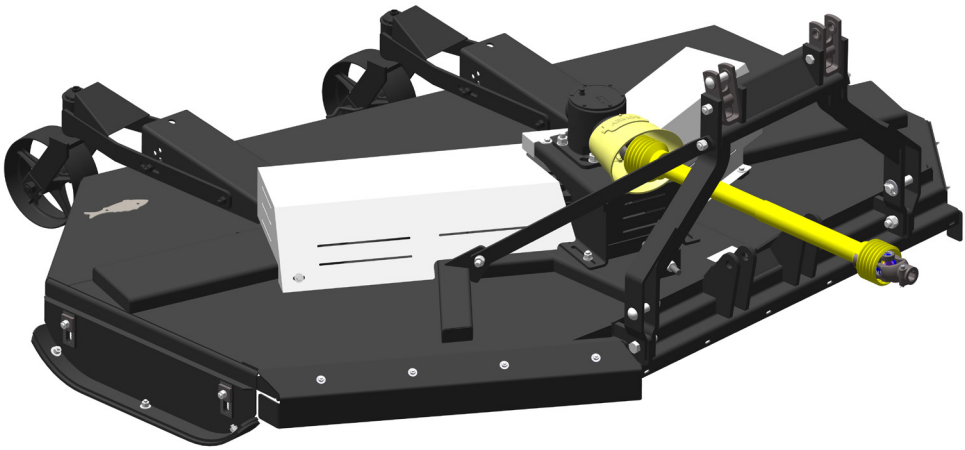

RPDL 2250/2700/3000

Central and Lateral Mounted Rotary Cutter

BALDAN

Presentation

We appreciate your preference and congratulate you for the excellent choice you have just made, by purchasing a product manufactured with **BALDAN IMPLEMENTOS AGRÍCOLAS S/A** technology.

This manual provides guidance on the necessary processes, from purchase to operating, use, safety and maintenance procedures.

BALDAN guarantees that it has delivered this implement to the distributor in complete and perfect condition.

The distributor is responsible for its care and conservation for the time it remains in its possession, as well as its assembly, readjustment, lubrication and general inspection.

During the technical delivery, the distributor must advise the user customer on maintenance, safety, their obligations in case of technical assistance, strict compliance with the warranty period and reading the instruction manual.

Any request for technical assistance under warranty must be made with the distributor where the product was purchased.

We reiterate the need for careful reading of the warranty certificate and compliance with all elements of this manual, as this will increase the shelf-life of your implement.

Instruction
Manual

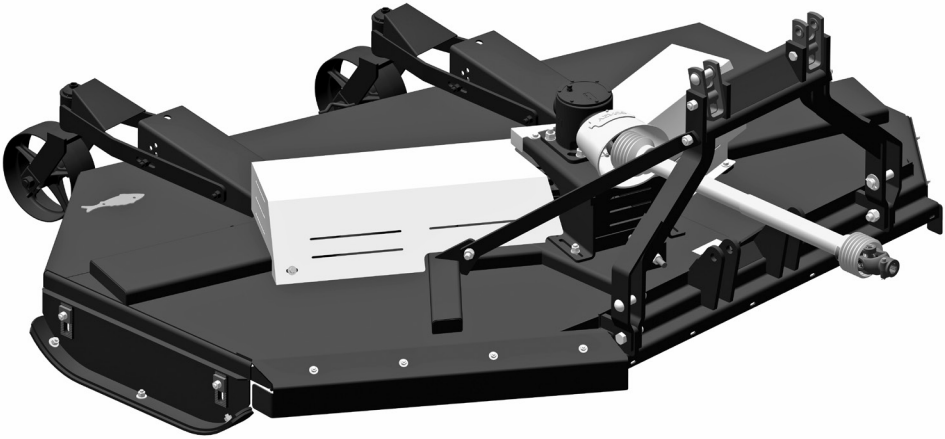

RPDL 2250/2700/3000

Central and Lateral Mounted Rotary Cutter

BALDAN IMPLEMENTOS AGRÍCOLAS S/A.
CNPJ: 52.311.347/0009-06
Insc. Est.: 441.016.953.110

Scan the QR Code on the identification plate of your device and access this Instruction Manual online.

BALDAN

Index

BALDAN WARRANTY **07**
GENERAL INFORMATION **08**
To owner *08*
SAFETY STANDARDS **09**
To operator ..... *09 - 12*
WARNINGS ..... **13 - 14**
COMPONENTS **15**
RPDL - Central and Lateral Mounted Rotary Cutter *15*
DIMENSIONS **16**
RPDL - Central and Lateral Mounted Rotary Cutter *16*
SPECIFICATIONS **17**
RPDL - Central and Lateral Mounted Rotary Cutter *17*
HITCH **18**
Tractor hitch *18*
Adjusting the length of the cardan ..... *19 - 20*
ADJUSTMENTS **21**
Centralization *21*
Leveling *22*
Working height adjustment *23*
Working position ..... *24 - 26*
OPERATIONS **27**
Recommendations for the cardan *27*
Direction of rotation of the blades *28*
Recommendations for operation *29*
MAINTENANCE **30**
Belt tension *30*
Pulley nut adjustment *31*
Front, rear and side shields *32*
Replacement of side show guide plates *33*
Blades *34*
Blade wear - Blade bar system *35*
Blade exchange - Blade bar system *36*
Blade replacement - Rotating tray system (Optional) *37*
Lubrication *38*
Lubrication every 8 hours work *39*
Oil change - Gearbox (BPN) *40*
Oil change - Gearbox (Comer) *41*
Storage *42*
Post storage *42*

Index

Operational maintenance ..... *42 - 43*
Cares *44*
General cleaning *45*
Rotary cutter conservation ..... *45 - 46*
OPTIONAL **47**
Optional accessories *47*
IDENTIFICATION **48**
Identification plate *48*
Product identification *49*
NOTES ..... **50 - 51**
CERTIFICATE **52**
Certificate of warranty ..... *52 - 58*

▪ Baldan Warranty

BALDAN IMPLEMENTOS AGRÍCOLAS S/A guarantees the normal operation of the implement to the dealer for a period of 6 (six) months from the date of delivery on the resale invoice to the first end consumer.

During this period, **BALDAN** undertakes to remedy defects in materials and/or workmanship of its responsibility, being labor, freight and other expenses the dealer's responsibilities.

During the warranty period, the request and replacement of any defective parts must be made to the regional dealer, who will send the defective part for analysis at **BALDAN**.

When such procedure is not possible and the reseller has exhausted its resolution capacity, it will request support from **BALDAN**'s Technical Assistance, through a specific form distributed to resellers.

After analyzing the replaced items by **BALDAN**'s Technical Assistance, and concluding that it is not a warranty, then the costs related to the replacement will be the responsibility of the dealer;

as well as expenses for material, travel including accommodation and meals, accessories, used lubricant and other expenses arising from the call for Technical Assistance, and the company **BALDAN** is authorized to make the respective billing on behalf of the reseller.

Any repair made to the product that is within the warranty period by the dealer, will only be authorized by **BALDAN** upon prior presentation of a quote describing parts and labor to be performed.

This term excludes the product that undergoes repairs or modifications by officials who do not belong to the **BALDAN** dealer network, as well as the application of non-genuine parts or components to the user's product.

This guarantee will become null when it is determined that the defect or damage is resulting from improper product use, failure to follow instructions or the inexperience of the operator.

It is agreed that this warranty does not cover tires, deposits of polyethylene, cardans, hydraulic components, etc., which are equipment guaranteed by their manufacturers.

Manufacturing and or material defects, object of this warranty term, will not constitute, under any circumstances, reason for purchase and sale contract termination, or compensation of any nature.

Baldan reserves the right to change and/or improve the technical characteristics of its products, without prior notice, and without obligation to do so with previously manufactured products.

General Information

• To owner

BALDAN IMPLEMENTOS AGRÍCOLAS S/A, is not responsible for any damage caused by accident from use, transport or in improper or incorrect storage of your implement, whether by negligence and / or inexperience of anyone.

Only people who have full knowledge of the tractor and the implement must make the transport and the operation thereof

BALDAN is not responsible for any damage caused in unpredictable situations or others to implement's normal use.

Improper handling of this equipment can result in serious or fatal accidents. Before putting the equipment into operation, carefully read the instructions contained in this manual. Make sure that the person responsible for the operation is instructed in the correct and safe handling. Also make sure the operator has read and understood the product instruction manual.

⚠ ATTENTION

NR-31 - SAFETY AND HEALTH AT WORK IN AGRICULTURE, LIVESTOCK FORESTRY, LOGGING AND AQUACULTURE.

This Regulatory Standard is to establish the principles to be observed in the organization and in the workplace, consistent with planning and development of agricultural, livestock, forestry, logging and aquaculture activities with safety and health, environment of Work.

MR. OWNER OR EQUIPMENT OPERATOR.
Read and follow carefully the provisions of NR-31.

More information, visit the website and read in full the NR-31.
http://portal.mte.gov.br/legislacao/normas-regulamentadoras-1.htm

▪ Safety Standards

• To operator

THIS SYMBOL INDICATES AN IMPORTANT SAFETY WARNING. IN THIS MANUAL, WHENEVER YOU FIND IT, CAREFULLY READ THE FOLLOWING MESSAGE AND BE AWARE OF THE POSSIBILITY OF PERSONAL INJURY.

ATTENTION

Read the instruction manual carefully for recommended safety practices.

ATTENTION

Only start operating the tractor when you are properly accommodated and with the seat belt fastened.

ATTENTION

Do not transport people on the tractor or inside or on the equipment.

ATTENTION

There is a risk of serious injury from tipping over when working on slopes. Do not use excessive speed.

ATTENTION

Do not work with the tractor if the front is without enough ballast for the rear equipment. If there is a tendency to lift, add weights or weights to the front or front wheels.

ATTENTION

Before doing any maintenance on your equipment, make sure it is properly stopped. Avoid getting run over.

▪ Safety Standards

ATTENTION

FOLLOW ALL RECOMMENDATIONS, WARNINGS AND SAFE PRACTICES RECOMMENDED IN THIS MANUAL, UNDERSTAND THE IMPORTANCE OF YOUR SAFETY. ACCIDENTS CAN LEAD TO DISABILITY OR EVEN DEATH. REMEMBER, ACCIDENTS CAN BE AVOIDED!

ATTENTION

Before starting work on or transporting the RPDL, check it for people or obstructions.

ATTENTION

Always keep the access and work places clean of residues such as oil or grease, as they can cause accidents.

ATTENTION

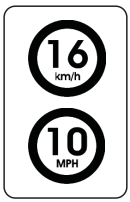

When transporting the RPDL, do not exceed a speed of 16 km/h or 10 MPH, avoiding the risk of damage and accidents.

ATTENTION

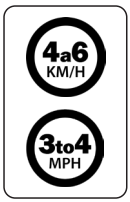

When working with the RPDL, do not exceed a speed of 4 to 6Km/h or 3 to 4 MPH, avoiding the risk of damage and accidents.

ATTENTION

Do not make adjustments with the RPDL in operation.
When doing any work on the RPDL, turn off the tractor first.
Use proper tools.

ATTENTION

Improperly disposing of waste affects the environment and ecology, as it will be polluting rivers, canals or the soil.
Find out about the correct way to recycle or dispose of waste.

PROTECT THE ENVIRONMENT!

Safety Standards

ATTENTION

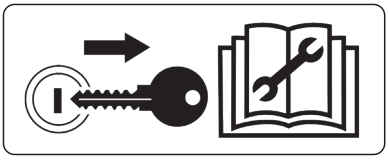

Remove the ignition key before performing any maintenance on the RPDL.
- Protect yourself from possible injury or death caused by an unforeseen departure of the RPDL.
- If the RPDL is not properly engaged, do not start the tractor.

ATTENTION

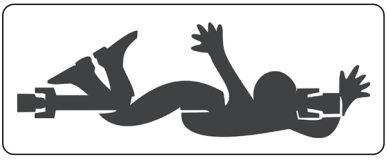

There are risks of injury or death to the mower operator and bystanders during operations for the following reasons:
- Body contact with rotating knives.
- Wrapping the body in transmission shafts and rotary shafts.

ATTENTION

To prevent serious injury or death, when the cutter is in operation and the knives are rotating, proceed as follows:

- Stop and turn off the equipment if people are less than 50 meters away.

- Do not put hands or feet under the chassis. Contact with knives can cause serious injury or death.

- Never allow people on or under the cutter, especially children.

ATTENTION The cutters can drop fragments or throw objects at high speeds which can cause serious injury or death to those nearby.

▪ Safety regulations

• PPE equipment

ATTENTION **DO NOT WORK WITH RPDL WITHOUT FIRST PUTTING ON THE EPIS (SAFETY EQUIPMENT). IGNORING THIS WARNING COULD CAUSE DAMAGE TO YOUR HEALTH, SERIOUS ACCIDENTS OR DEATH.**

When carrying out certain procedures with **RPDL**, wear the following PPE (Safety Equipment):

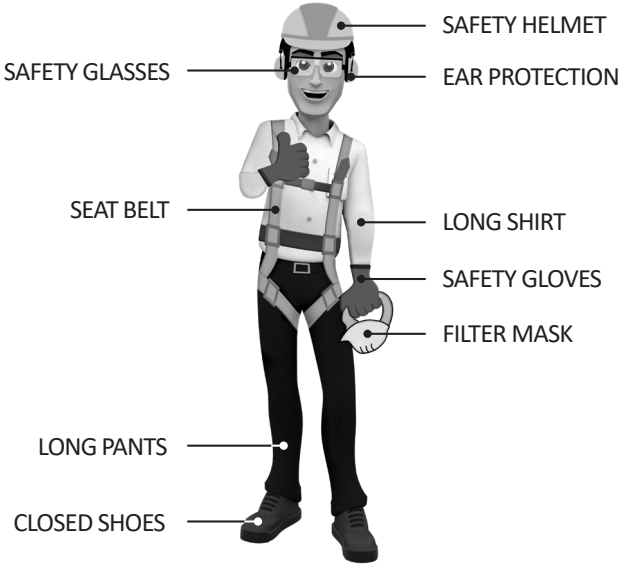

IMPORTANT

Safety practices must be carried out at all stages of working with the RPDL, thus avoiding accidents such as the impact of objects, falls, noises, cuts and ergonomics, i.e. the person responsible for operating the RPDL is subject to internal and external damage to their body.

NOTE **All PPE (safety equipment) must have a certificate of authenticity.**

▪ Warnings

⚠ When operating with the RPDL, do not allow people to stand too close or on top of it.

⚠ When carrying out any maintenance service, use the PPE equipment.

⚠ Do not make adjustments with the RPDL in operation.

⚠ Do not travel on highways, especially at night. Use warning signs throughout the route.

⚠ If there is a need to travel with the RPDL on the highways, consult the transit agencies beforehand.

⚠ Do not wear clothes that are too loose, as they may become entangled in the RPDL.

⚠ When starting the tractor engine, be properly seated in the operator's seat and aware of complete knowledge of the correct and safe handling of both the tractor and the RPDL. Always place the gearshift lever in the neutral position, disconnect the control gear from the power take-off and place the hydraulic controls in the neutral position.

⚠ Do not start the tractor engine indoors, without adequate ventilation, as the exhaust gases are harmful to health.

⚠ When maneuvering the tractor to RPDL hitch, make sure you have the necessary space and that no one is too close, always maneuver at idle speed and be prepared to brake in an emergency.

⚠ When working on sloping terrain, proceed with care always trying to maintain the necessary stability. In case of an imbalance beginning, reduce the acceleration, turn the wheels to the side of the terrain slope and never raise the RPDL.

⚠ Always drive the tractor at speeds compatible with safety, especially when working on rough terrain or on slopes, keep the tractor in gear at all times.

⚠ When driving the tractor on roads, keep the brake pedals interlocked and use safety signs.

⚠ Do not allow the RPDL to be used by people who have not been trained, that is, who do not know how to operate it correctly.

⚠ Do not transport or work with the RPDL near obstacles, rivers or streams.

⚠ Only operate the RPDL if all protections are installed and correctly.

⚠ Do not, under any circumstances, remove the protective components of the RPDL.

⚠ Do not operate the tractor with a light front. If the front tends to lift, add more weight to the front or front wheels.

⚠ When leaving the tractor, place the gearshift lever in neutral position and apply the parking brake. Never leave the RPDL hitched to the tractor in the raised position of the hydraulic system.

⚠ The transport of people on self-propelled machines and implements is prohibited.

⚠ Alterations to the original RPDL characteristics are not authorized as they may alter safety, function and affect service life.

▪ Warnings

⚠ Carefully read all safety information contained in this manual and on the RPDL.

⚠ All inspections must be done with the RPDL stopped and turned off, using secure means of access.

⚠ Access, maintenance and especially inspection in risk areas of the RPDL must only be done by a trained or qualified worker, observing all safety guidelines.

⚠ Periodically check all components of the RPDL before using it.

⚠ Depending on the equipment used and the working conditions in the field or in maintenance areas, precautions are necessary. Baldan has no direct control over precautions, therefore it is the owner's responsibility to put in place safety procedures while working with the RPDL.

⚠ Any and all maintenance on the RPDL must be done with the same shutdown and with the tractor turned off.

⚠ Operate the RPDL from the driver's seat only. Do not release controls until movements are complete.

⚠ Do not leave the seat before locking the controls to prevent any movement.

⚠ Regularly check for the presence of safety pins and screws. Do not substitute with other objects such as nails, wires, etc.

⚠ The maintenance of the RPDL must only be done by specialized people. Before starting maintenance, disconnect all drive systems from the RPDL.

⚠ The warranty is immediately void when the RPDL assembly, adjustment, operation and maintenance instructions are not observed.

⚠ Unqualified persons and children are prohibited from operating the RPDL.

⚠ Alcoholic beverages or some medications can cause loss of reflexes and alter the operator's physical condition. Therefore, never operate this RPDL under the use of these substances.

⚠ Read or explain all the procedures in this manual to the user who cannot read.

If in doubt, contact the After Sales.
Telephone: 0800-152577 / E-mail: posvenda@baldan.com.br

▪ Components

• RPDL - Central and Lateral Mounted Rotary Cutter

1. Blade protection box
2. Back depth wheel
3. Multiplier gearbox
4. 3rd point holder
5. Hook Shackle
6. Belt protection
7. Guard assembly
8. Cardan
9. Front guard
10. Coupling head
11. Cutting regulation shoe
12. Blades

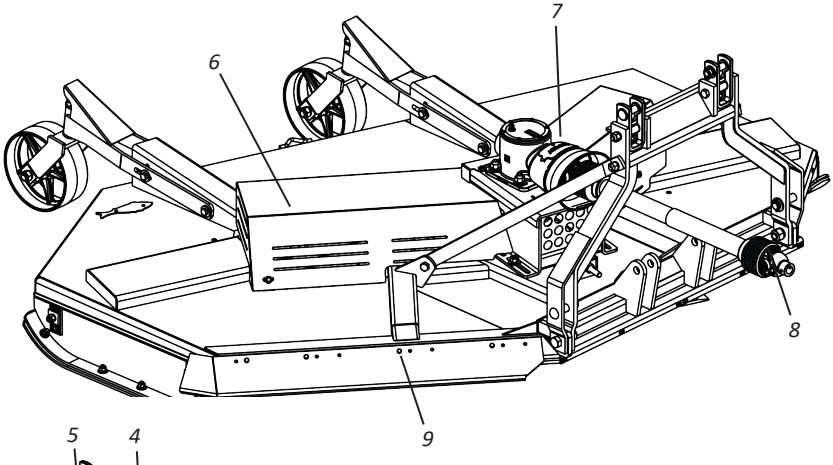

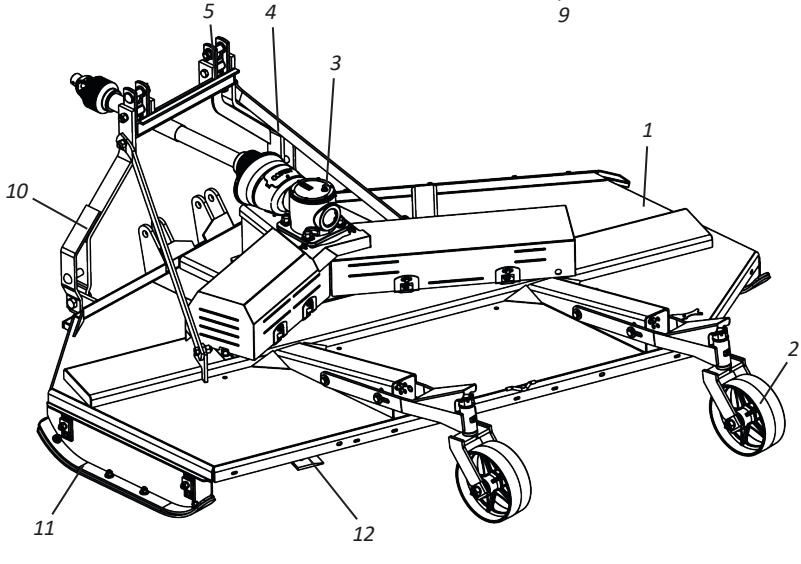

Dimensions

- **RPDL - Central and Lateral Mounted Rotary Cutter**

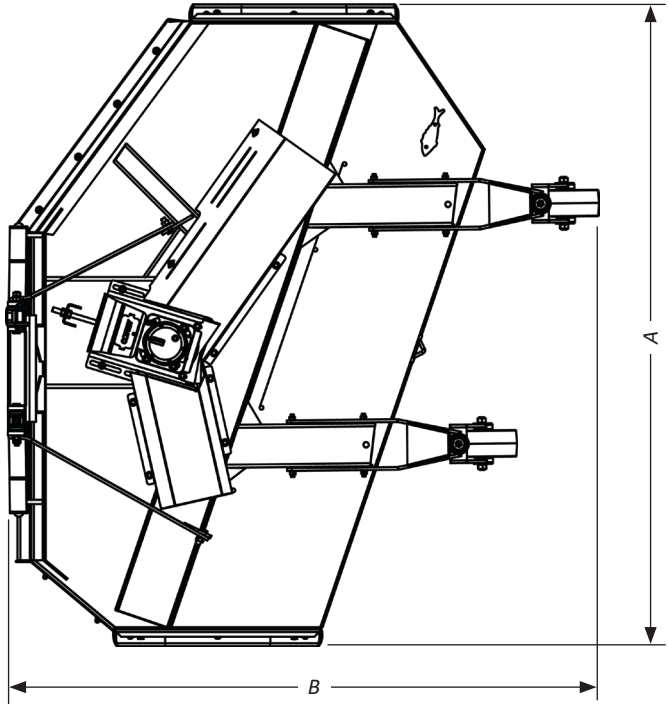

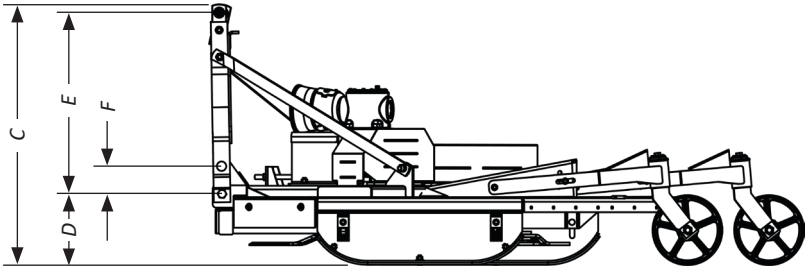

Model	A (mm)	B (mm)	C (mm)	D (mm)	E (mm)	F (mm)
RPDL 2250	2598	2366	1149	285	825	126
RPDL 2700	2993	2732	1149	285	825	126
RPDL 3000	3230	2895	1149	285	825	126

▪ Specifications

• RPDL - Central and Lateral Mounted Rotary Cutter

Model	Nr of Blades	Cutting Width (mm)	Length of Cardan (mm)	Weight Approx. (Kg)	Tractor Power (HP)
RPDL 2250	4	2250	600 - 800	700	65
RPDL 2700	4	2700	600 - 800	800	75
RPDL 3000	4	3000	600 - 800	870	85

Cutting height ..... 50 - 200 mm
TDP RPM 540
Blade RPM 950

Baldan reserves the right to change and/or improve the technical characteristics of its products, without prior notice, and without obligation to do so with previously manufactured products. Technical specifications are approximate and reported under normal working conditions.

INTENDED USE OF RPDL

- The **RPDL** was developed for the most diverse types of mowing in the most varied types of vegetation.
- The **RPDL** must be driven and activated only by a duly instructed operator.

NOT ALLOWED USE OF RPDL

- To avoid damage, serious accident or death, DO NOT carry people on any part of the **RPDL.**
- It is NOT allowed to use the **RPDL** to attach, tow or push other implements or accessories.
- The **RPDL** must NOT be used by an inexperienced operator who does not know all the techniques of driving, command and operation.

▪ Hitch

Before coupling the **RPDL**, check if the tractor has front or rear weight or ballast sets in its wheels to avoid overturning. Rear wheels will give greater stability and soil traction to the tractor.

• Tractor Hitch

01 - Finally, slowly approach the tractor to the **RPDL** in reverse, being aware when to use the brakes.

02 - Use the hydraulic position control lever as you approach the **RPDL**, leaving the left lower arm at the level of rotary cutter hitch.

03 - Engage the lower left arm of the tractor through the engaging pin (1) on the **"A"** bracket of the **RPDL**.

04 - Engage the 3rd point of the tractor in the **"B"** support of the **RPDL**.

05 - Then, using the adjusting lever **"C"**, engage the lower right arm of the tractor in throuth the pin (1) into the **"D"** bracket of the **RPDL**.

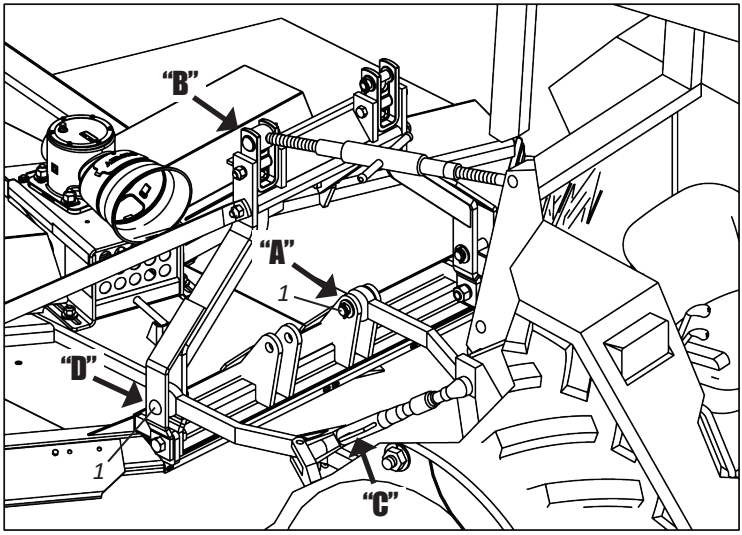

ATTENTION **When lifting the tractor hydraulics, check the hydraulic height limit so that the tractor does not touch the top of the blade box. Hydraulic lift varies according to the tractor model.**

OBSERVAÇÃO **Ao engatar a RPDL, procure um lugar seguro e de fácil acesso, use sempre marcha reduzida com baixa aceleração.**

▪ Hitch

Before coupling the cardan, check its length in relation to the tractor model that will pull the cutter.

• Adjusting the length of the cardan - Part I

IMPORTANT **Before making the cut on the cardan, check the adjustment of the tractor's drawbar, which can increase or decrease its length, avoiding cutting the cardan.**

To cut the cardan, proceed as follows:

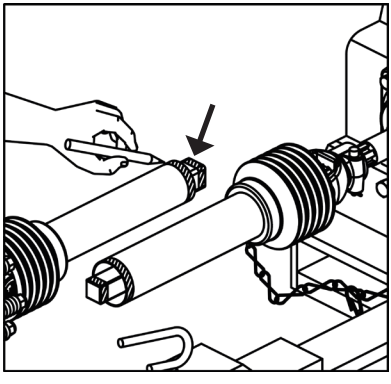

Hold the cardan shaft halves close together in the working position and mark the part to be cut.

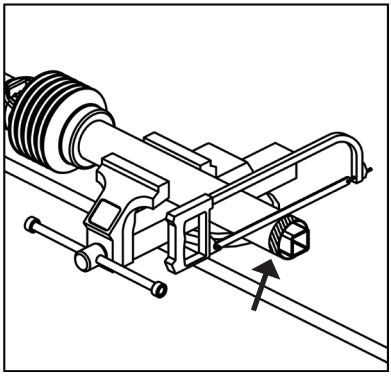

Decrease the internal and external protective tubes of the cardan proportionally.

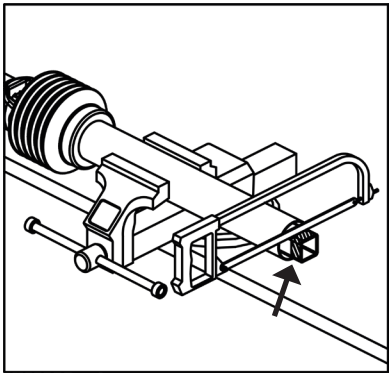

Cut the inner bars of the cardan to the same length as the protective tubes.

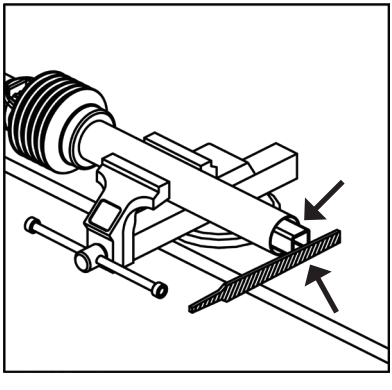

Remove all burrs and edges. Clean and grease the cardan slide bars.

• **Adjusting the length of the cardan - Part II**

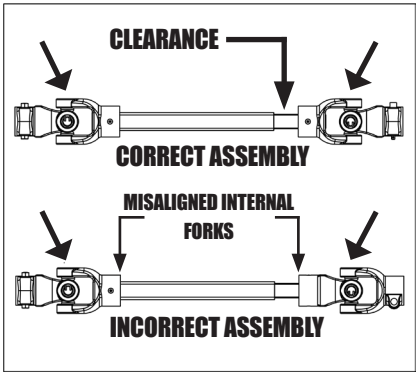

When mounting, note that the internal and external terminals are always in the same plane, aligned. Also check the clearance in the telescopic shaft, which should be 5 to 7 cm.

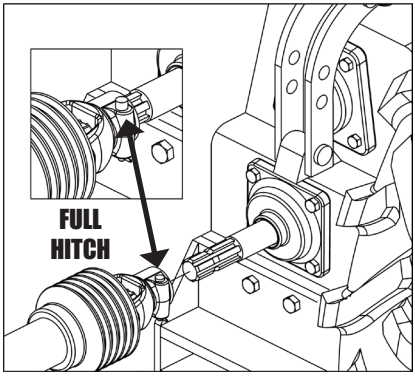

Couple the flange on the tractor TDP shaft noting that the hitch will only be completed when the lock (1) pops out.

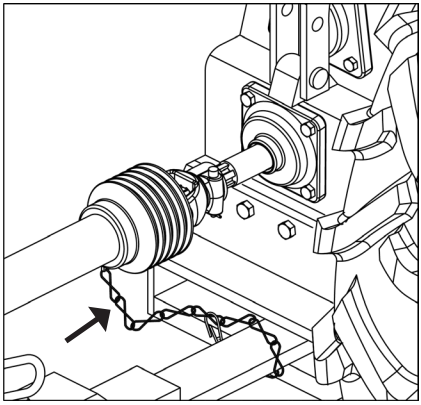

Do not engage the extended cardan chains. Keep the installation slack and consider angular movements.

IMPORTANT

Every time you change tractor, check the length of the cardan shaft again.

NOTE

Check page 27 for the cardan articulation angle and other recommendations for its use.

ATTENTION

The wrong mounting of the cardan causes excessive vibration, harmful to the transmission.
When coupling the cardan to the TDP, the tractor must have the engine off and the parking brake applied.

▪ Adjustment

• Centralization

To center the **RPDL** relative to the longitudinal axis of the tractor, proceed as follows:

01 - Align the top link of the **RPDL** with the 3rd point of the tractor.
02 - Then lift the **RPDL** completely.
03 - Next, check that the distances **"A"** of the lower hydraulic arms are equal to the tractor tires. The lower arms should be level with each other.

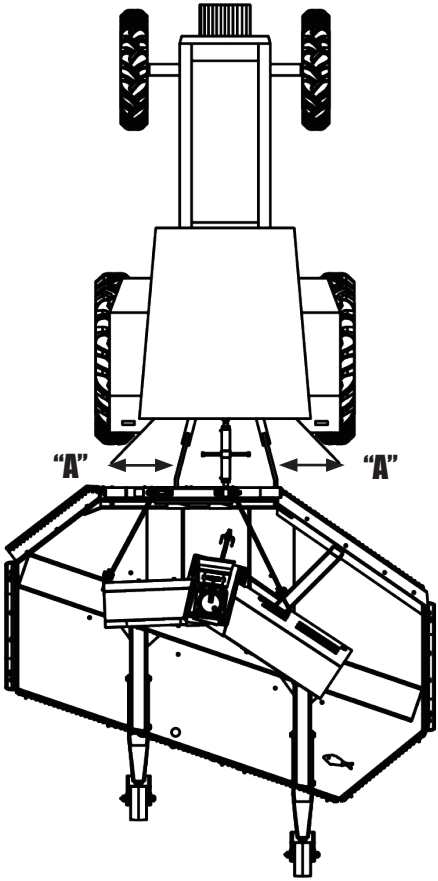

ATTENTION **Never adjust the tractor's lower linkage arms with the RPDL lowered.**

▪ Adjustment

• Leveling

To level **RPDL** in relation to the longitudinal axis of the tractor, proceed as follows:

01 - First off, the tractor must be in a flat location.

02 - Then, through the upper arm **"A"** and lower right **"B"**, which have adjustments, level the **RPDL** as per letter **"C"**.

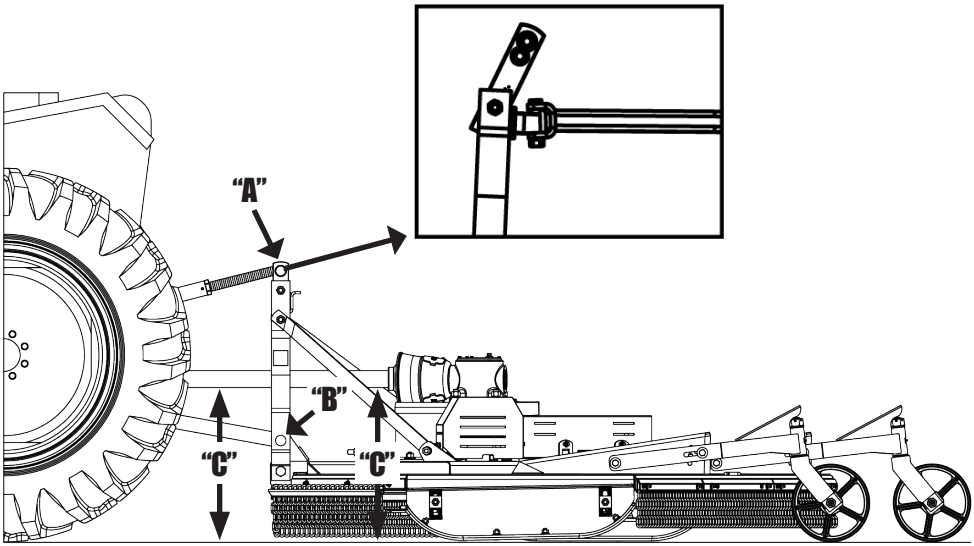

Attention: The "A" shackle must be positioned vertically, with a slight inclination towards the implement.

⚠ ATTENTION

Check the clearance on the cardan, which should be of 5 to 7 cm. If there is no gap, adjust the length of the gimbal as instructed on pages 19 and 20.

▪ Adjustment

• Cutting height adjustment

The cutting height of the **RPDL** is regulated by the side shoes (1) and the rear wheel (3). To adjust the cutting height, proceed as follows:

SIDE SHOES

01 - Loosen the nuts (4), pressure washers (5), and grooved plates (5).

02 - Then adjust the side shoes (1) by positioning them at the desired height.

03 - Then, loosen the screws (6), pressure washers (5), and grooved plates (4).

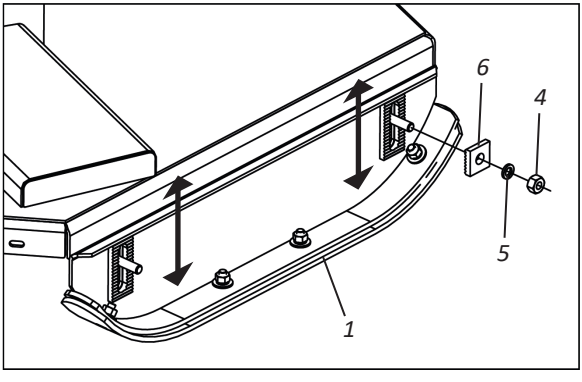

REAR WHEEL

04 - After regulating the side shoes (1), loosen the nuts (7), pressure washers (8), flat washer (9), and remove screws (10).

05 - Then adjust the rear wheel (2) by positioning it at the desired height through the bracket bore hole (11).

06 - Then replace the bolts (10), plain washers (9), locking washers (8) and nuts (7) by tightening them.

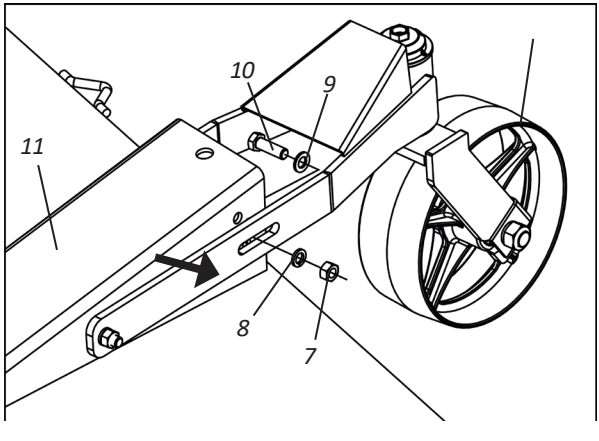

⚠ ATTENTION

We recommend a cutting height of at least 50 mm above the ground.

▪ Adjustment

• Working position - Part I

The **RPDL** can work in the central and lateral position in relation to the tractor. To change the working position, disengage the tractor from the **"A"** points and connect it to the **"B"** points or vice versa.

CENTRAL POSITION

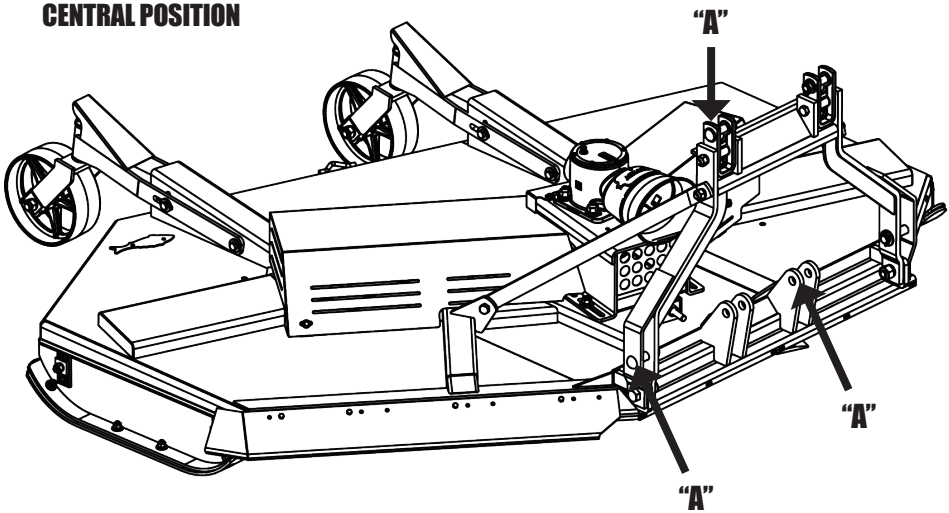

SIDE POSITION

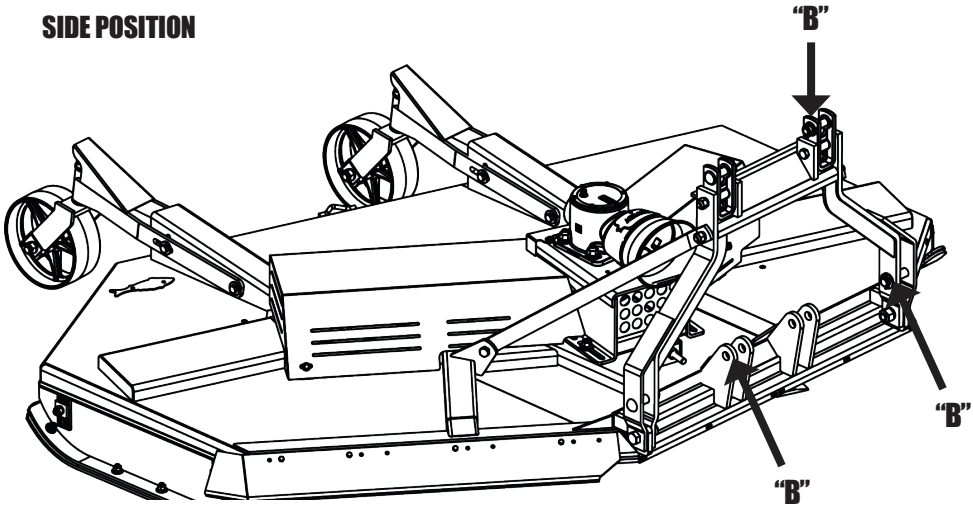

▪ Adjustment

• Working position - Part II

The gearbox (1) has oblong holes **"C"**. When changing the working position of the **RPDL** (from central to lateral or vice versa) if necessary, loosen screws **"D"** and turn the speed gearbox (1) to better position the cardan (2).

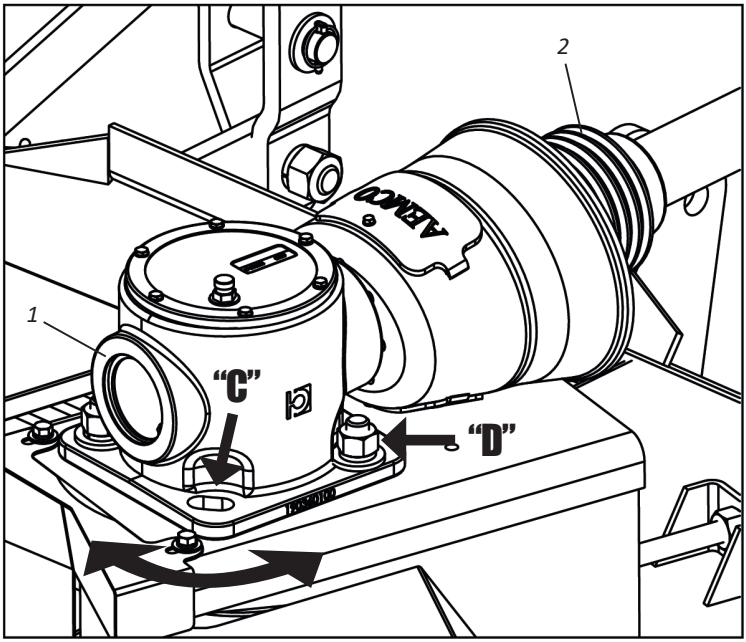

OBSERVATION Check page 27 for the cardan pivot angle and other recommendations for using it.

▪ Adjustment

• Working position - Part III

For measurements exceeding the right side of the tractor using the **RPDL** in the center or side positions, use the formula below.

Formula: A - C = X
B - C = X

Data: **A** = Dimension of the center of the **RPDL** header in the center position until the end of the cut.
B = Dimension of the center of the **RPDL** header in lateral position until the end of the cut.
C = Dimension of the tractor 's rear wheel divided by 2.
X = Cut size that exceeds the tractor.

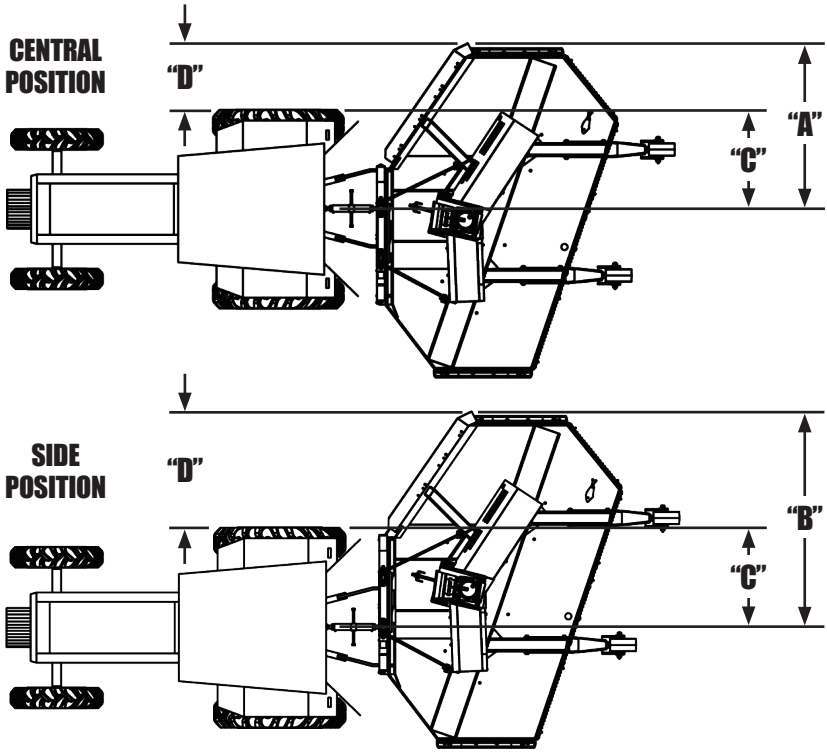

Model	Central Position "A"	Side Position "B"	Displacement between "A" and "B"
RPDL 2250	1307	1782	475
RPDL 2700	1496	1971	475
RPDL 3000	1597	2072	475

⚠ ATTENTION

Measurements "C and D" vary from tractor to tractor due to different gauge sizes.

▪ Operations

• Recommendations for the cardan

The cardan is limited in its maximum angle of articulation. This angle, with the running cardan, can reach a maximum of 35° for a short period of time. In continuous work, it should not exceed 15°.

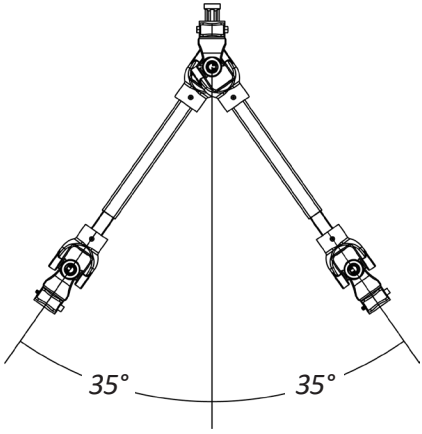

SHORT TIME PERIOD

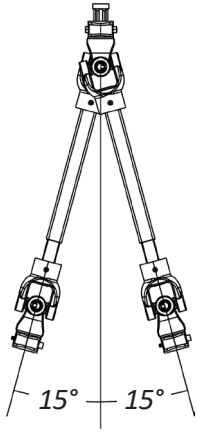

IN CONTINUOUS WORK

ATTENTION

Never activate the TDP when the joint is at an angle greater than 15°. In maneuvers with the TDP turned off, never exceed the 35° articulation angle, this can occur on transport routes or maneuvers in sheds with the cardan coupled.

Safety protection (1) is a fundamentally important component for the user's personal safety and for the lifespan of the cardan shaft.

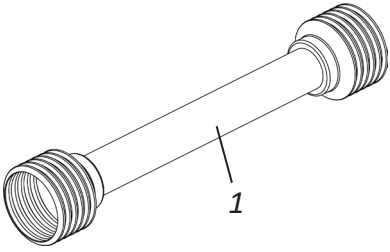

IMPORTANT

Do not work with the RPDL if the cardan is not protected (1). Ignoring this warning can cause cardan damage or serious accidents.

Operations

- **Direction of rotation of the blades.**

The **RPDL** have 4 identical blades that rotate in the clockwise position.

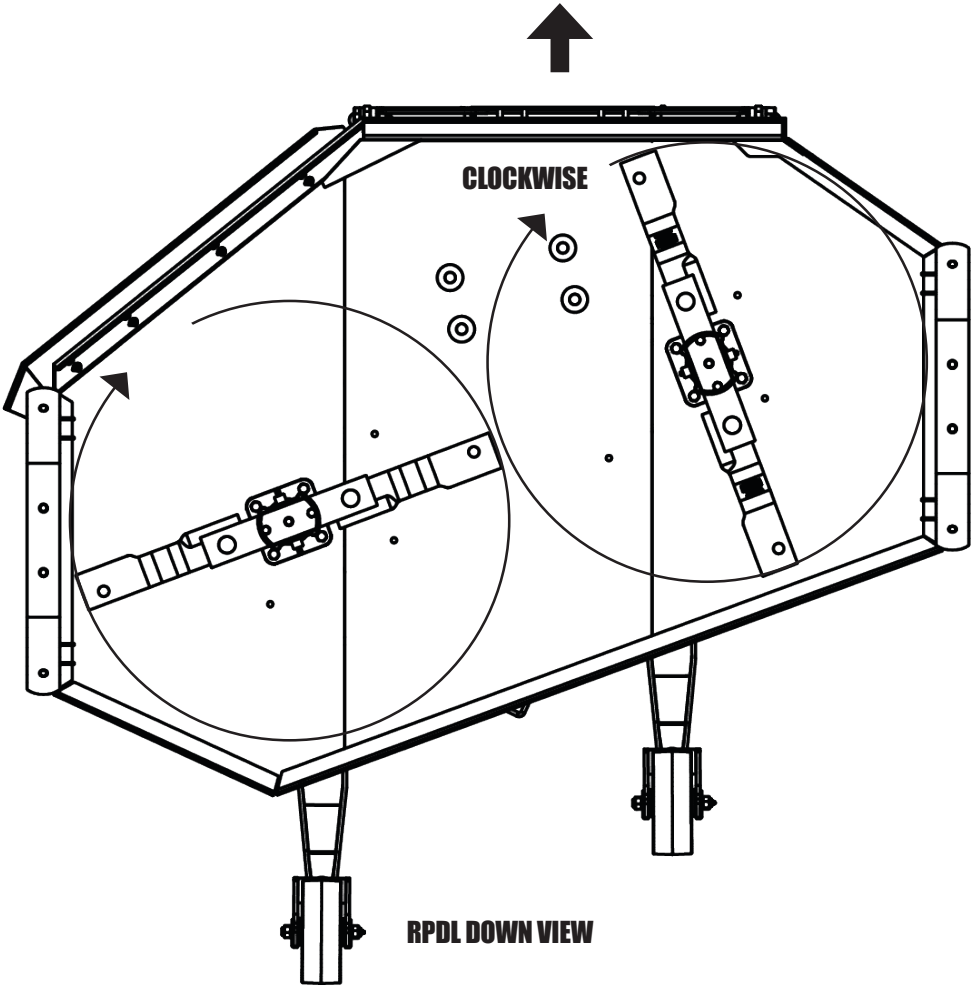

ATTENTION Keep away from the rotating elements especially of the knives until the movement of the knives is interrupted. Ignoring this warning may cause severe accidents or death.

▪ Operations

• Recommendations for operation

01 - Before starting work, make a complete review of the **RPDL**. Complete the multiplier oil level and retighten the nuts and bolts. Also check the interlocking of the pins and cotter pins.

02 - The working speed is **540 rpm on the TDP**. Check the corresponding engine speed in the tractor manual. This engine speed varies from tractor to tractor.

03 - For best performance, we recommend a **minimum cutting height 50 mm** above the ground.

04 - To ensure a good working result, the site to be cut must be free of stones and stumps.

05 - First, put the knives into operation and then start cutting the vegetation.

06 - Do not turn on the TDP with the knives locked in a mound of earth, sticks or stumps, objects can be thrown and cause serious injuries.

07 - During work, keep the engine speed constant, avoiding the variation in the average speed of the tractor, so that there is no inefficiency or failure in cutting vegetation.

08 - To couple or uncouple the cardan, the TDP must be turned off.

09 - During work, do not vary the speed of the tractor, this leads to inefficient cutting "faults". Maintain medium speed and maintain it throughout your work. The recommended average working speed is **4 to 6 km/h**.

10 - In excessively wavy soils, the cutting height adjustment must prevent the knives from touching the ground excessively.

11 - The tractor's lower link stabilizers must be adjusted with the **RPDL** fully raised.

12 - In dense vegetation, we recommend using a reduced gear, keeping the **TDP rotation at a constant 540 rpm**.

13 - When transporting or carrying out checks/maintenance, keep the power take-off off.

14 - Stop and turn off the equipment if people are less than **50 meters** away.

In case of doubt, never operate or handle the RPDL, consult After Sales.
Telephone: 0800-152577 / E-mail: posvenda@baldan.com.br

▪ Maintenance

• Belt tension

The **RPDL** have belts that should be checked daily for their tension. To adjust belt tension, proceed as follows:

01 - Loosen the nuts (1) by unlocking the bracket (2).
02 - Then tighten the belt tension (3) tightening the nut (4) of the tensioner (5).
03 - Then retighten the nuts (1) by locking the bracket (2).

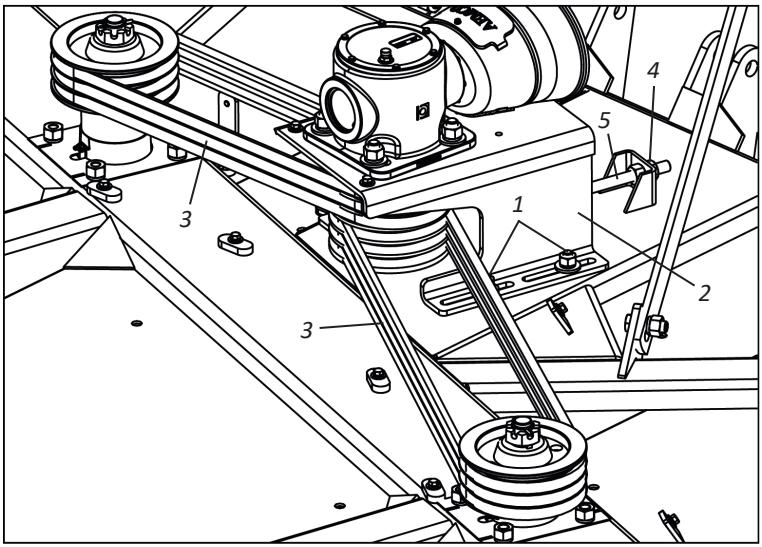

ATTENTION

Check the belt tension in the first hours of work, then perform a daily check.
If the belts wear out, replace them immediately.
Do not operate the RPDL with loose belts.
The chain clearance should be of ± 1 cm in its center.

IMPORTANT

Before adjusting the tensioning of the belts, make sure that the tractor is switched off, if it is not, switch it off and remove the ignition key.

OBSERVATION

Adjusting the tension of the belts must be done to avoid excessive slippage during work.
If a large volume of vegetation is encountered or if there is excessive cutting resistance, decrease the working speed or try to cut on a narrower range.

▪ Maintenance

• Pulley nut adjustment

After 50 to 70 hours of operation, check if the pulley nut of the **RPDL** is properly tightened, to do this, proceed as follows:

01 - Disengage the cardan (1) from the gearbox (2).

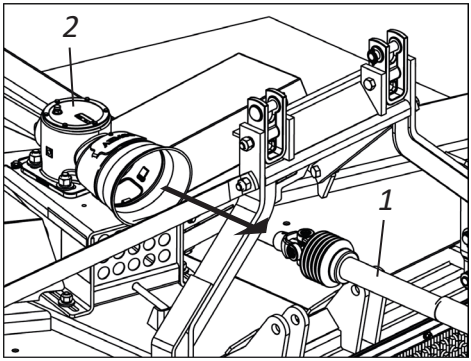

02 - Then, loosen washers and nuts (3) from the support (4) and the nut and locknut (5) together with the tensioner (6).

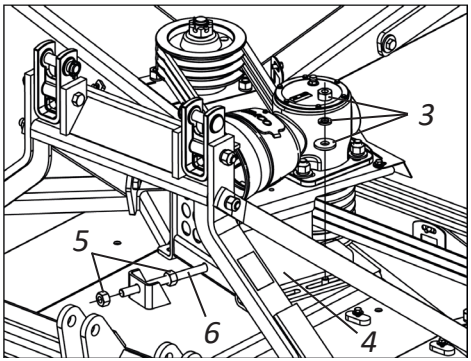

03 - Then, remove the gearbox (7) together with the pulley (8). Then, loosen the washer and nut (9), lock the pulley (8) and tighten the washer and nut (9) as necessary.

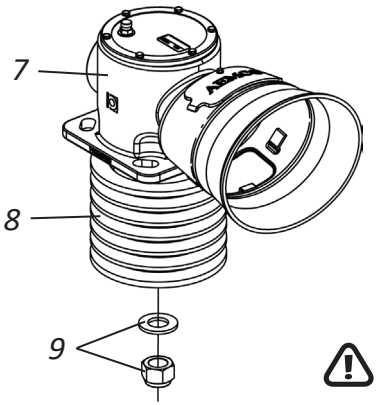

04 - Then reassemble all the components and finish fitting the cardan (1) in the gearbox (2).

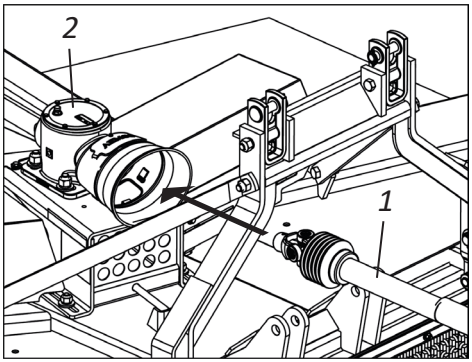

⚠ ATTENTION | **Check the pulley setting when changing the belt set.**

▪ Maintenance

• Front, rear and side shields

Always before using the **RPDL**, check the conditions of the front protections (1), rear (2), the belt protections (3), the pulley protection (4) and the cardan protection (5). In case of breakage or loss of any of these protections, they must be replaced or replaced immediately to avoid serious accidents or death during work.

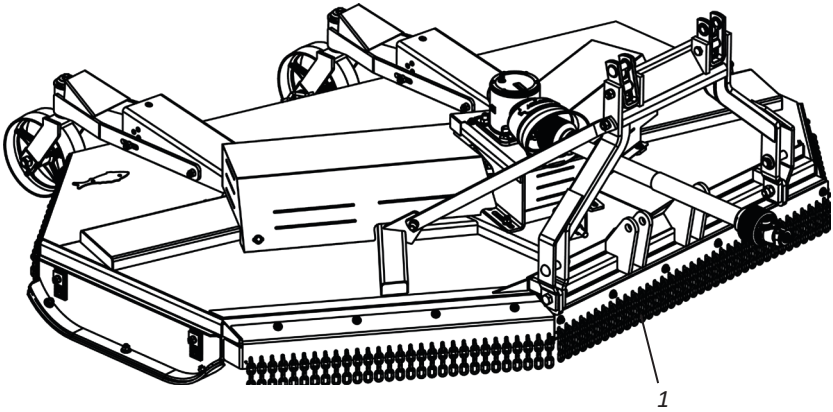

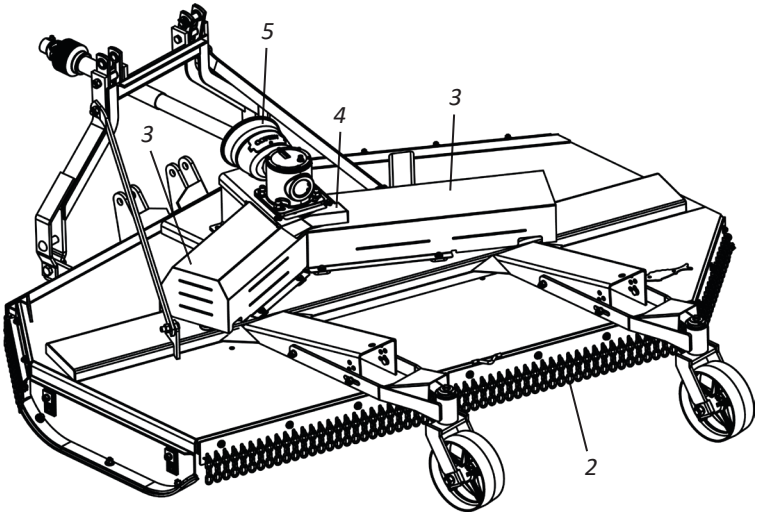

ATTENTION **Do not work with the RPDL without the front (1), rear (2) and side (3) guards. Ignoring these warnings may cause severe accidents or death.**

▪ Maintenance

• Replacement of side shoe guide plates

Check periodically for wear on the guide plates (1) of the side shoes (2) of the **RPDL**, and replace them if necessary. To adjust the guide plates (1), proceed as follows:

01 - Loosen the screws (3), pressure washers (4), flat washer (5) and screws (6).
02 - Then replace the guide plates (1).
03 - Then secure it with screws (6), flat washer (5), pressure washers (4) and screws (3).

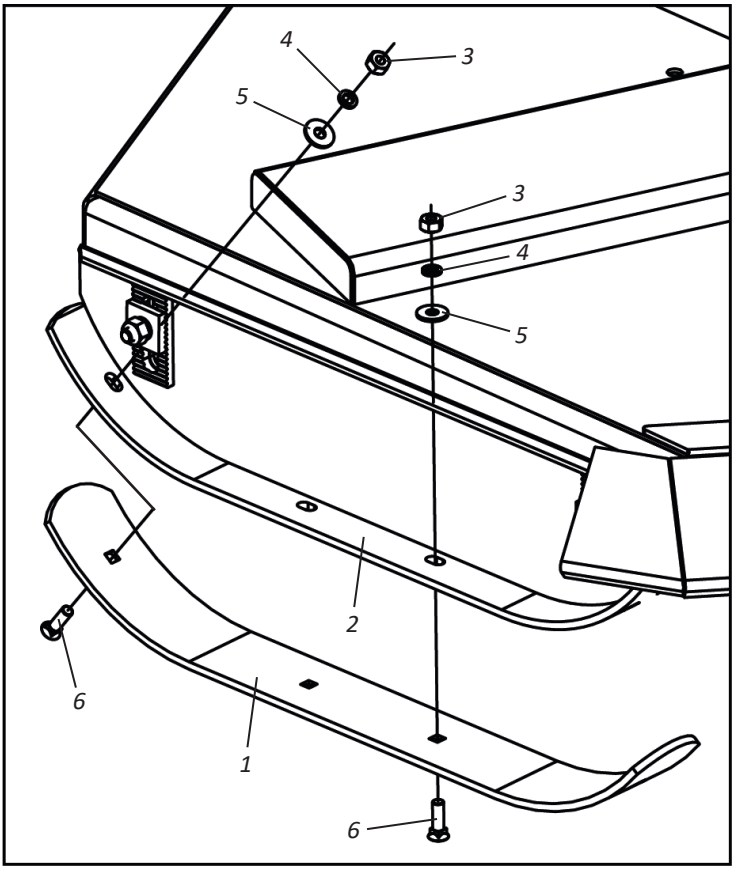

ATTENTION **If screws (6), plain washers (5), spring washers (4) and nuts (3) are worn, immediately replace them. Ignoring these warnings may cause severe accidents or death.**

▪ Maintenance

• Blades

The **RPDL** can be purchased with blade bar or rotating tray systems. Blades for each system are different as shwon below.

BLADE HOLDER BAR

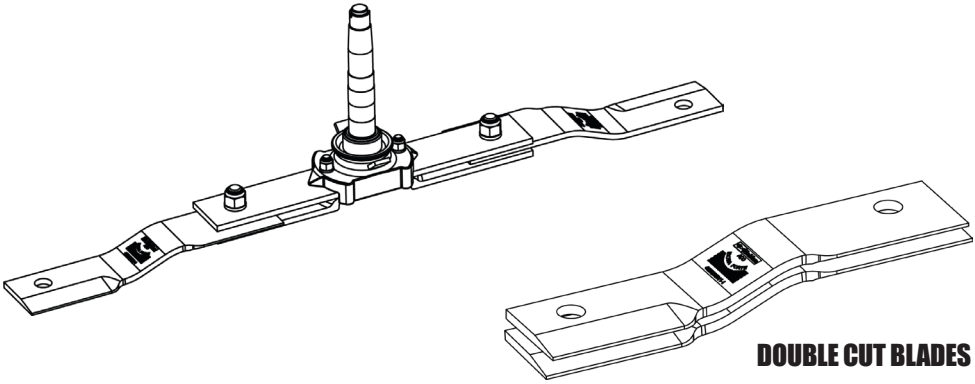

ROTATING TRAY

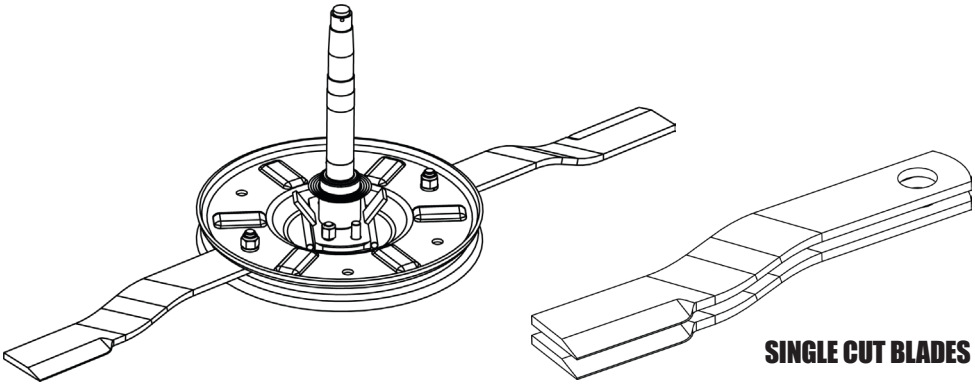

⚠ ATTENTION

When replacing the knives, note that they are supplied in pairs, which must be kept until they are mounted on the bearing or on the RPDL tray. Unbalanced knives can cause excessive vibration and damage bearings, seals and the gearbox. The weight variation between these knives is within the tolerance limit.

▪ Maintenance

• Blade wear - Blade bar system

The **RPDL** with bar blade system has reversible blades. Before starting the work, do a thorough review on the rotary cutter especially on the blades so that no wear will affect the hole, which should have a 20mm wall. If the wear affects the hole or the wall becomes too thin, we recommend the replacement of the blade immediately because it will not have the necessary safety, thus creating a risk of accidents.

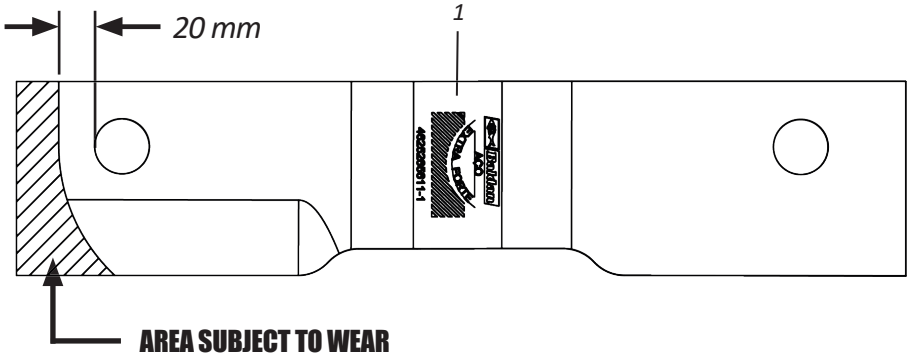

ATTENTION

In the event of loss or breakage of any of the rotating elements, especially the blades (1), they must be replaced immediately to avoid vibrations and consequently damage to RPDL, work failure, serious accident or death.

IMPORTANT

Always keep knives (1) sharpened to increase yield and require less tractor effort.

▪ Maintenance

• Blade exchange - Blade bar system

Before each use of the **RPDL**, inspect the knives verifying that they are in good condition and properly installed. Replace the knives if they are broken, bent, excessively worn or have suffered any type of damage. Also, replace the knives when you notice imperfections in the cut. To replace the knives, proceed as follows:

01 - Loosen the screws (1), pressure washers (2), and nuts (3).
02 - Then replace the blades (4).
03 - Then, secure them again with screws (1), pressure washers (2), and nuts (3).

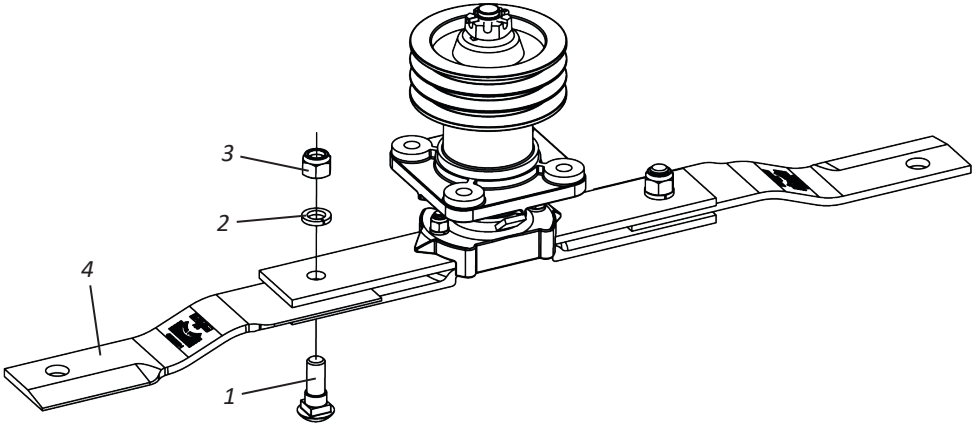

⚠ ATTENTION

Periodically check the conditions and tightness of the bolts (1), locking washers (2) and nuts (3) for securing the knives (4). Ignoring this warning may cause severe accidents or death.

! IMPORTANT

When changing blades (4), always change the pair avoiding damage to RPDL because of the imbalance. Always use original Baldan parts.
When changing knives (4), also replace the bolts (1), locking washers (2) and nuts (3). Periodically check the condition and tightness of the blades' set screws and nuts.

▪ Maintenance

• Blade replacement - Rotating tray system (Optional)

Before each use of the **RPDL**, inspect the knives verifying that they are in good condition and properly installed. Replace the knives if they are broken, bent, excessively worn or have suffered any type of damage. Also, replace the knives when you notice imperfections in the cut. To replace the knives, proceed as follows:

01 - Loosen the screws (1), pressure washers (2), and nuts (3).
02 - Next, take the blade (4) off the rotating tray (5).
03 - Then, remove the bushing (6) from the knife (4) and place it on the new knife.
04 - Loosen the screws (1), pressure washers (2), and nuts (3).

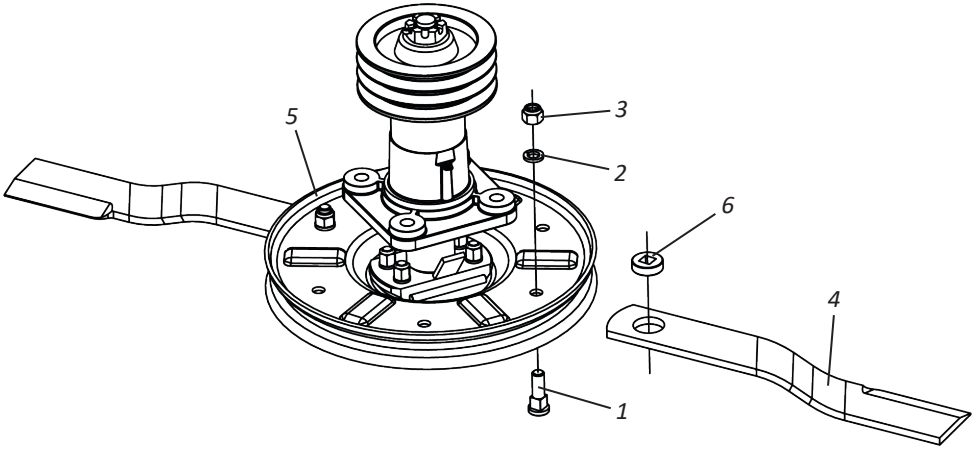

ATTENTION

Periodically check the conditions and tightness of the bolts (1), pressure washers (2) and nuts (3) that secure the blades (4). Ignoring this warning may cause severe accidents or death.

IMPORTANT

When changing blades, always change torque avoiding damage to the RPDL due to unbalance. Always demand Baldan original parts.
When changing knives (4), also replace the bolts (1), locking washers (2) and nuts (3). Periodically check the condition and tightness of the blades' set screws and nuts.

▪ Maintenance

The **RPDL** was developed to provide you with maximum performance over terrain conditions. Experience has shown that periodic maintenance of certain parts of the **RPDL** is the best way to help you get out of trouble, so we suggest checking it out.

• Lubrication

Lubrication is essential for a good performance and greater durability of the moving parts of the **RPDL**, contributing to saving maintenance costs.

Before starting the operation, carefully lubricate all grease fittings, always observing the lubrication intervals on the next page. Ensure the quality of the lubricant, regarding its efficiency and purity, avoiding using products contaminated by water, earth and other agents.

• Table of greases and equivalents

Manufacturer	Type of recommended grease
Petrobrás	Lubrax GMA-2
Atlantic	Litholine MP 2
Ipiranga	Ipiflex 2
Castrol	LM 2
Mobil	Grease MP
Texaco	Marfak 2
Shell	Alvania EP 2
Esso	Multi H
Bardahl	Maxlub APG-2EP
Valvoline	Palladium MP-2
Petronas	Tutela Jota MP 2 EP
	Tutela Alfa 2K
	Tutela KP 2K

⚠ ATTENTION **If there are manufacturers and/or equivalent brands that are not listed in the table, consult the manufacturer's technical manual.**

▪ Maintenance

- **Lubrication every 8 hours of work**

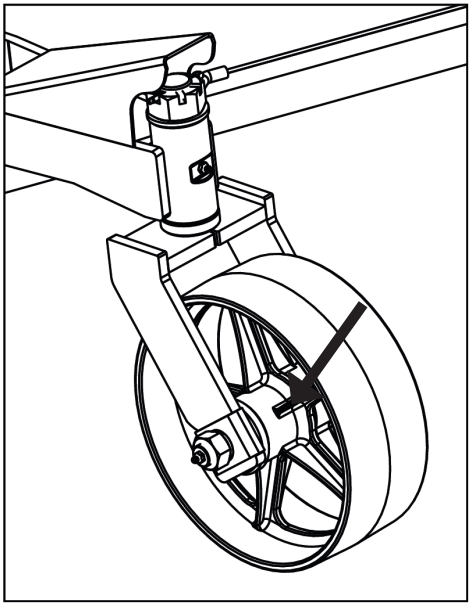

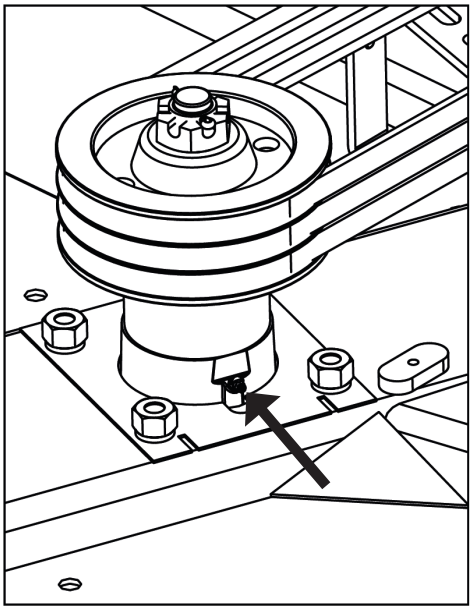

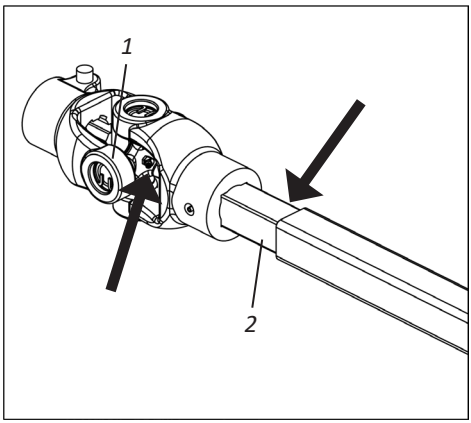

Lubricate the crossbars (1) with grease every 8 hours. The telescopic axle (2) must be lubricated weekly.

ATTENTION **When lubricating the RPDL, do not exceed the amount of new grease. Introduce a sufficient amount.**

▪ Maintenance

• Oil change - Gearbox (BPN)

On the **RPDL** equipped with a gearbox (BPN), before putting the cutter into operation, remove the plug (1) from the gearbox (2) and replace the breather with dipstick (3). Periodically check the level of the gearbox (2) to do this, proceed as follows:

01 - Place the **RPDL** in a flat location.
02 - The place the vent with dipstick (3) into the hole without threading it.
03 - Then remove the breather with dipstick (3) and check the level marker as shown in **detail "A"**, if there is a complete need or change the oil.

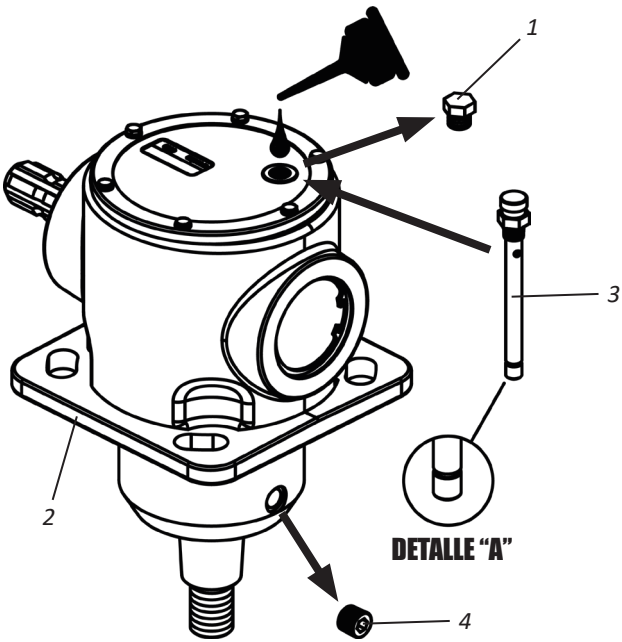

ATTENTION | **Replace the oil every 600 hours of work using 1.65 liters. Only use the specified oil: SAE 90EP.**

IMPORTANT | **To drain all the gearbox oil (2), remove the drain plug (4).**

OBSERVATION | **When using a specific oil brand, avoid completing the oil level with different brand and specification.**

▪ Maintenance

• Oil change - Gearbox (Comer)

On the **RPDL** equipped with a multiplier box (Comer), before putting the brush cutter into operation, remove the plug (1) from the multiplier box (2) and replace the breather (3). Periodically check the oil level in the gearbox (2) using the level indicator screw (4) and top up whenever necessary.

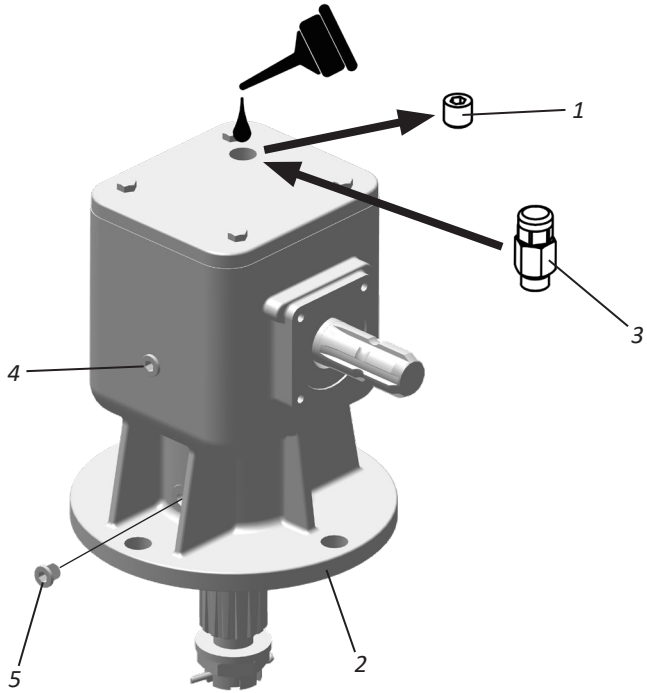

ATTENTION | **Replace the oil every 600 hours of work using 1.40 liters. Only use the specified oil: SAE 80W-90.**

IMPORTANT | **To drain all the gearbox oil (2), remove the drain plug (5).**

OBSERVATION | **When using a specific oil brand, avoid completing the oil level with different brand and specification.**

▪ Maintenance

• Storage

Before storing the **RPDL**, remove the cardan and store it in a covered, dry place.

Check all transmission components, if necessary, replace any worn or damaged parts. **Always demand Baldan original parts.**

• Post storage

Before returning work with the **RPDL**, lubricate all components and check the oil level.

• Operational maintenance - Part I

PROBLEMS	PROBABLE CAUSES	SOLUTIONS
No cutting.	Blades worn or broken.	Replace blades (pairs only) as instructed on pages 34 and 37.
	TDP rotation is incorrect.	Correct rotation 540 Rpm.
	Excessive speed.	Reduce work speed.
	Blades do not spin when TDP is running.	Check the drive shaft connection.
	Multiplier box is not working properly.	Repair the multiplier box.
	Direction of rotation of the blades.	Make sure the correct side of the cut of the blades and the direction of rotation of the multiplier box.
Irregular cut.	Blades worn or broken.	Replace blades (pairs only) as instructed on pages 34 to 37.
	Excessive speed.	Reduce work speed.
	Excessive cutting height.	Lower cutting height.
	Vegetation of great density and of excessive height.	Use reduced speed.

▪ Maintenance

• Operational maintenance - Part II

PROBLEMS	PROBABLE CAUSES	SOLUTIONS
Noisy Rotary Cutter.	Loose components.	Check all the screws and tighten.
	Low oil of the multiplier box.	Check oil level as instructed on pages 40 and 41.
Vibration.	Broken blades.	Replace blades (pairs only) as instructed on pages 34 to 37.
	Incorrect cardan length.	Check the length of the cardan.
	Cardan shaft crosshead assembly.	Check the correct mounting of the cardan brackets.
Tip and blades wear too fast.	Blades are touching the ground.	Adjust and operate it at a height that will eliminate contact with the ground.
	The cutter is not operating at the correct TDP speed.	Keep the correct TDP speed.

▪ Maintenance

- **Cares**

01 - Before each job, check the condition of all pins, screws, gearbox and knives. When necessary, retighten or replace them.
02 - After every 8 hours of work, retighten the screws and nuts.
03 - Travel speed must be carefully controlled depending on terrain conditions.
04 - The **RPDL** is used in several applications, requiring knowledge and attention during its handling.
05 - Only local conditions will be able to determine the best way of operating the **RPDL**.
06 - When assembling or disassembling any part of the **RPDL**, use suitable methods and tools.
07 - Carefully observe the lubrication intervals at the various lubrication points of the **RPDL**.
08 - Always check if the parts show wear. If replacement is required, **always demand genuine Baldan parts.**

IMPORTANT | **Proper and periodic maintenance is necessary to ensure the long life of the RPDL.**

▪ Maintenance

• General cleaning

01 - When storing the **RPDL**, do a general cleaning and wash it completely with water only. Check that the paint has not worn away, if it has, apply a general coat, apply protective oil and completely lubricate the **RPDL**.

02 - Fully lubricate the rotary cutter. Check all the moving parts of the **RPDL**, if they are worn or loose, make the necessary adjustment or replace the parts, leaving the brush cutter ready for the next job.

03 - In the period that you do not use the **RPDL**, clean the residues that remain in it after its use, such as grass, dirt, crop residues, etc

04 - Spray the entire **RPDL** with preservative oil, never use burnt oil.

05 - Replace all stickers, especially the warning ones that are damaged or missing. Make everyone aware of their importance and the dangers of accidents when instructions are not followed.

06 - Clean the cardan weekly or sooner if necessary.

07 - Remove the protective covers, separate “male” and “female”, wash and remove scale, dry and lubricate the sliding parts with grease and reassemble.

08 - After all maintenance care, store your **RPDL** on a flat surface, covered and dry, away from animals and children.

09 - We recommend washing the **RPDL** only with water at the beginning of the work.

⚠ ATTENTION | **Do not use chemical or abrasive products to wash the RPDL, as this could damage the paint and adhesives on it.**

• Rotary cutter conservation - Part I

To extend the life and appearance of the **RPDL** for longer, please follow the instructions below:

01 - Wash and clean all **RPDL** components during and at the end of the working season.

02 - Use neutral products to clean the grid, following the safety and handling guidelines provided by the manufacturer.

03 - Always carry out maintenance during the periods indicated in this manual.

• Rotary cutter conservation - Part II

The practices and precautions below, if adopted by the owner or operator, make a difference to the conservation of the **RPDL.**

01 - Be careful when washing with high pressure;

▪ Maintenance

02 - Use only water and NEUTRAL detergent (pH equal to 7);

03 - Apply the product, strictly following the manufacturer's instructions, on the wet surface and in the correct sequence, respecting the application and washing time;

04 - Stains and dirt not removed with the products must be removed with the aid of a sponge.

05 - Rinse the machine with clean water to remove all chemical residues.

06 - Do not use: - Detergents with a basic active principle (pH greater than 7) can attack/ stain the rotary cutter paint.

- Detergents with acidic active principle (pH less than 7), act as a stripper/ zinc remover (protection of parts against oxidation).

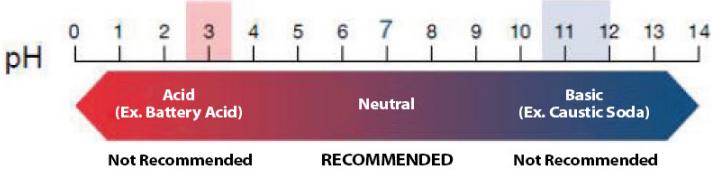

07 - Let the machine dry in the shade, so that water does not accumulate in its components. Drying too quickly can cause stains on your paint.

08 - After drying, lubricate all chains and grease fittings according to the recommendations in the operator's manual.

09 - Spray the entire machine, especially the zinc-coated parts, with protective oil, following the manufacturer's application guidelines. The protector also prevents the adherence of dirt in the machine, facilitating subsequent washing.

10 - Observe the curing time (absorption) and application intervals as recommended by the manufacturer.

⚠ ATTENTION | **Do not use any other type of oil to protect the rotary cutter (used hydraulic oil, "burnt" oil, diesel oil, castor oil, kerosene, etc.).**

! IMPORTANT | **We recommend the following protective oils:**
- Bardahl: Protective Agro 200 or 300
- ITWChemical: Zoxol DW - Series 4000

OBSERVATION | **Ignoring the conservation measures mentioned above may result in the loss of the warranty for painted or zinc-coated components that present possible oxidation (rust).**

▪ Optional

• Optional accessories

The **RPDL** has options that can be purchased according to the work need.

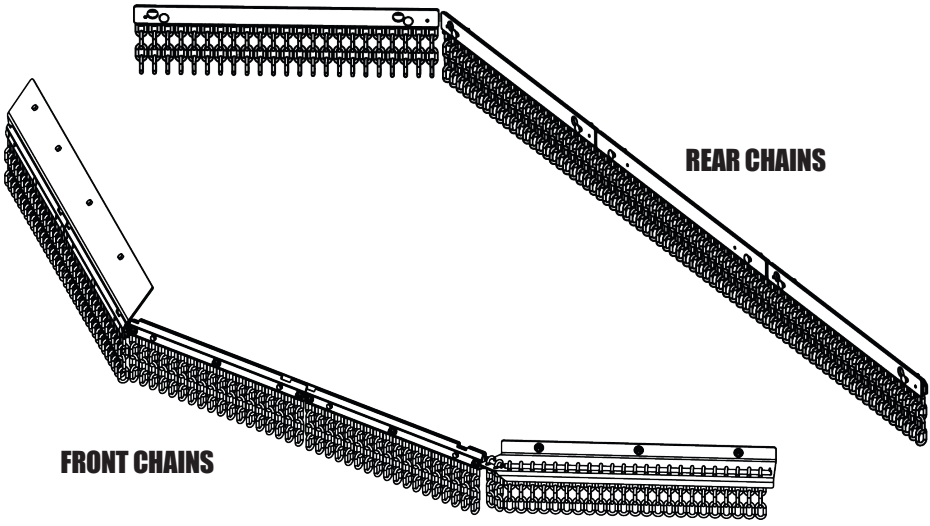

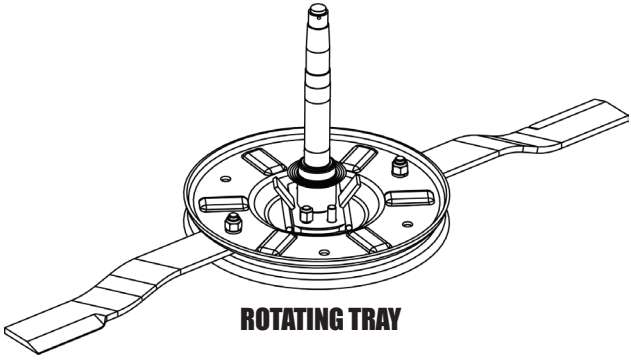

Identification

• Identification plate

To see the parts catalog or to request technical assistance from Baldan, always inform model (1), serial number (2) and date of manufacture (3), which is on your **RPDL** identification plate.

ATTENTION

The drawings contained in this Instruction Manual are for illustrative purposes.

CONTACT

In case of doubt, never operate or handle your equipment without consulting the After Sales.
Telephone: 0800-152577
e-mail: posvenda@baldan.com.br

PUBLICATIONS

Code: 60550107573 | CPT: RPDL07021A

▪ Identification

• Product Identification

Make the correct identification of the data below, to always have information about the life of your equipment.

Owner: _____

Resale: _____

Farm: _____

City: _____

State: _____

Certificate No. of warranty: _____

Implement: _____

Serial No.: _____

Purchase date: _____

Invoice: _____

▪ Notes

▪ Notes

Certificate of Warranty

BALDAN IMPLEMENTOS AGRÍCOLAS S/A ensures the dealer normal performance of the implement for a period of six (6) months as of the delivery date on the retail invoice to the first final consumer. During this period, **BALDAN** undertakes to repair defects in material and/or of manufacture of its liability, including labor, freight and other expenses of the dealer's liability.

In the warranty period, request and replacement of eventual defective parts shall be made to the dealer of the area, who will submit the faulty piece for **BALDAN** analysis. When this procedure is not possible and the resolving capacity of the dealer is exhausted, the dealer will request the support of **BALDAN Technical Assistance** through a specific form distributed to dealers. After analyzing the replaced items by Baldan Technical Assistance, and concluding that it is not a warranty, then the dealer will be responsible for the costs related to the replacement; as well as material expenses, travel including accommodation and meals, accessories, lubricant used and other expenses arising from the call out to Technical Assistance, and Baldan company is authorized to carry the respective invoice in the name of the resale. Any repair carried in the product within the dealer warranty deadline will only be authorized by **BALDAN** upon previous budget presentation describing parts and work to be performed.

The product is excluded from this term if it is repaired or modified by representatives not belonging to the **BALDAN** dealer network, as well as the application of non-genuine parts or components to the user's product. This warranty is void where it is found that the defect or damage is caused by improper use of the product, failure to follow instructions or inexperience of the operator.

It is agreed that this warranty does not cover tires, polyethylene tanks, cardan, hydraulic components, etc., which are equipment guaranteed by their manufacturers. Manufacturing and/or material defects, object of this warranty term, will not constitute, under any circumstances, grounds for termination of a purchase agreement, or for indemnification of any nature.

BALDAN reserves the right to change and/or perfect the technical characteristics of its products, without previous notice, and without obligation to proceed in the same way with the products previously manufactured.

▪ Inspection and Delivery Certificate

SERVICE BEFORE DELIVERY: This implement was carefully prepared by the sales organization, inspected in all its parts according to the manufacturer's prescriptions.

DELIVERY SERVICE: The user has been informed of the current warranty terms and instructed on the use and maintenance precautions.

I confirm that I was informed about the terms of existing warranty and instructed on the use and proper maintenance of the implement.

Implement: _____ Serial number: _____

Date: _____ Invoice no.: _____

Resale: _____

Phone: _____ CEP: _____

City: _____ State: _____

Owner: _____

Phone: _____

Address: _____ Number: _____

City: _____ State: _____

E-mail: _____

Date of Sale: _____

Signature / Stamp of Resale _____

1st copy - Owner

▪ Inspection and Delivery Certificate

SERVICE BEFORE DELIVERY: This implement was carefully prepared by the sales organization, inspected in all its parts according to the manufacturer's prescriptions.

DELIVERY SERVICE: The user has been informed of the current warranty terms and instructed on the use and maintenance precautions.

I confirm that I was informed about the terms of existing warranty and instructed on the use and proper maintenance of the implement.

Implement: _____ Serial number: _____

Date: _____ Invoice no.: _____

Resale: _____

Phone: _____ CEP: _____

City: _____ State: _____

Owner: _____

Phone: _____

Address: _____ Number: _____

City: _____ State: _____

E-mail: _____

Date of Sale: _____

Signature / Stamp of Resale _____

2nd copy - Dealer

▪ Inspection and Delivery Certificate

SERVICE BEFORE DELIVERY: This implement was carefully prepared by the sales organization, inspected in all its parts according to the manufacturer's prescriptions.

DELIVERY SERVICE: The user has been informed of the current warranty terms and instructed on the use and maintenance precautions.

I confirm that I was informed about the terms of existing warranty and instructed on the use and proper maintenance of the implement.

Implement: _____ Serial number: _____

Date: _____ Invoice no.: _____

Resale: _____

Phone: _____ CEP: _____

City: _____ State: _____

Owner: _____

Phone: _____

Address: _____ Number: _____

City: _____ State: _____

E-mail: _____

Date of Sale: _____

Signature / Stamp of Resale _____

3rd copy - Manufacturer (Please send completed within 15 days)

1.74.05.0059-5

AC MATÃO
ECT/DR/SP

RESPONSE CARD

NOT REQUIRED SEAL

SEAL WILL BE PAID BY:

BALDAN IMPLEMENTOS AGRÍCOLAS S/A.
Av. Baldan, 1500 | Nova Matão | CEP: 15993-900 | Matão-SP. | Brasil
Phone: (16) 3221-6500 | Fax: (16) 3382-6500
www.baldan.com.br | email: sac@baldan.com.br
Export: Phone: +55 (16) 3221-6500 | Fax: +55 (16) 3382-4212 | 3382-2480
email: export@baldan.com.br

Avenida Baldan, 1500
Nova Matão
15.993-900
Matão/SP - Brasil
sac@baldan.com.br
export@baldan.com.br

+55 16 3221 6500
baldan.com.br