Parts Catalog

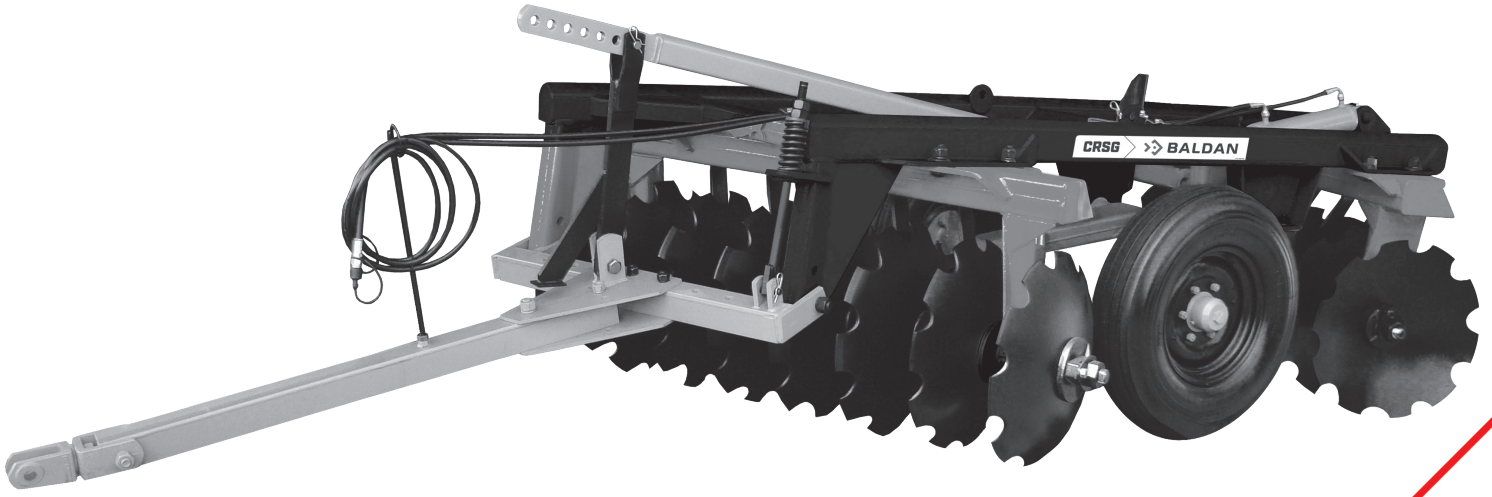

CRSG 12 to 28 Discs

Trailled Offset Disc Harrow

BALDAN

Index

CRSG 12 to 28 Discs *4*
Table CRSG 12 to 28 Discs *5*
Table CRSG 12 to 28 Discs *6*
Hitch Drawbar CRSG 12 to 16 Discs *7*
Hitch Drawbar CRSG 18 to 28 Discs *7*
Wheel Articulation Shaft *8*
Hydraulic Cylinder *8*
Discs Section *9*
Axial Bearing (Oil) *10*
Grease bearing *10*
Oil Bearing *11*
Stickers *12*

BALDAN

• CRSG 12 to 28 Discs

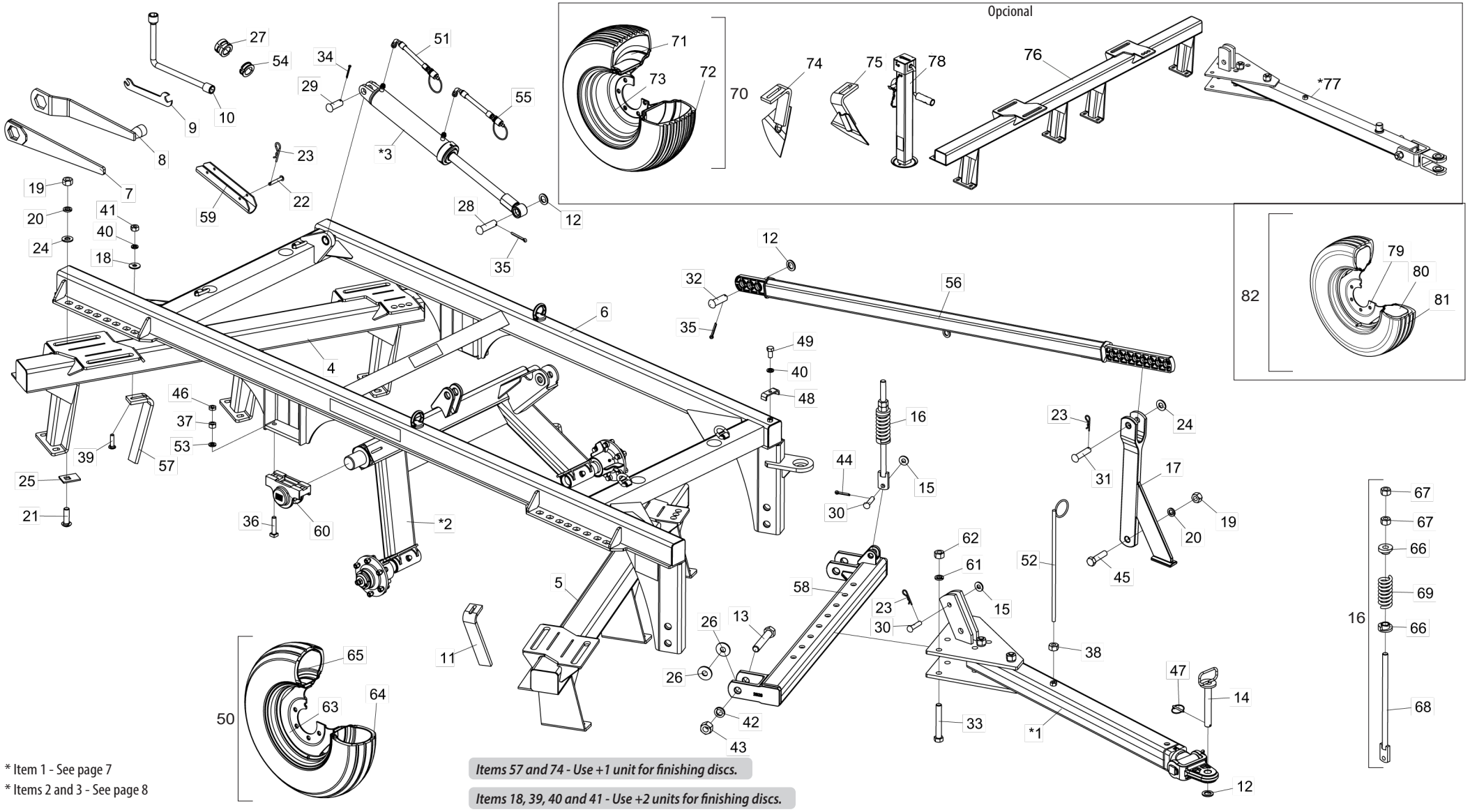

* Item 1 - See page 7

* Items 2 and 3 - See page 8

Items 57 and 74 - Use +1 unit for finishing discs.

Items 18, 39, 40 and 41 - Use +2 units for finishing discs.

• Table CRSG 12 to 28 Discs

Item	Code	Product description	All	CRSG 12 Discos	CRSG 14 Discos	CRSG 16 Discos	CRSG 18 Discos	CRSG 20 Discos	CRSG 22 Discos	CRSG 24 Discos	CRSG 28 Discos
*1	5084010307-0	Hitch Drawbar		1	1	1					
*1	5084010297-9	Hitch Drawbar					1	1	1	1	1
*2	5530025000-8	Wheelset Articulation Support		1	1	1					
*2	5232012187-6	Articulation Wheel Shaft					1	1	1	1	1
*3	6020061005-1	Hydr. Cylinder "D.A" Ø1.5/8" X Ø2.1/4" X 352mm (Course) X 600Mm (Closed)		1	1	1					
*3	6020059364-5	Hydr. Cylinder "D.A" Ø1.5/8" X Ø3.1/4" X 410mm(Course) X 689mm(Closed)					1	1	1	1	1
4	5022011835-2	Rear Gang CRSG 12 Discs		1							
4	5022011837-9	Rear Gang CRSG 14 Discs			1						
4	5022011839-5	Rear Gang CRSG 16 Discs				1					
4	5022011841-7	Rear Gang CRSG 18 Discs					1				
4	5022011843-3	Rear Gang CRSG 20 Discs						1			
4	5022011845-0	Rear Gang CRSG 22 Discs							1		
4	5022011847-6	Rear Gang CRSG 24 Discs								1	
4	5022011849-2	Rear Gang CRSG 28 Discs									1
5	5022011834-4	Front Gang CRSG 12 Discs		1							
5	5022011836-0	Front Gang CRSG 14 Discs			1						
5	5022011838-7	Front Gang CRSG 16 Discs				1					
5	5022011840-9	Front Gang CRSG 18 Discs					1				
5	5022011842-5	Front Gang CRSG 20 Discs						1			
5	5022011844-1	Front Gang CRSG 22 Discs							1		
5	5022011846-8	Front Gang CRSG 24 Discs								1	
5	5022011848-4	Front Gang CRSG 28 Discs									1
6	5404011226-2	Main Frame		1	1	1					
6	5404011230-0	Main Frame					1	1	1	1	1
7	5138010019-7	Wrench For Nut 1.5/8"	1								
8	5138010031-6	Wrench For Hexagonal Nut 1.5/8" and 1"		1	1	1	1	1			
8	5138010007-3	Wrench For Hexagonal Nut 1.5/8" E 1"							1	1	1
9	5138020001-9	Wrench For Hexagonal Nut 3/8" - 1/2"	1								
10	6020058707-6	Wrench "L" For Hexagonal Nut 5/8" - 3/4"		1	1	1	1	1			
10	5138050016-0	Wrench "L" For Hexagonal Nut 5/8" - 3/4"							1	1	1
11	5352050039-8	Front Scraper (2.1/2" X 5/8" With Slotted Hole)		3	4	5	5	5	6	7	9
12	6020010453-9	Flat Washer M33 Ø34.00 X Ø60.00 X 5.00mm		2	2	2	3	3	3	3	3
13	6020311139-0	Hexagonal Head Bolt 1" X 6.1/2" 8F Unc1A Gr5 Rp		2	2	2					
13	6020311156-0	Hexagonal Head Bolt 1.1/4" X 7" 7F Unc1A Gr5 Rp					2	2	2	2	2
14	5432060023-8	Pin Ø1" X 210mm		1	1	1					
14	5432010025-1	Pin Ø1.1/4" X 215mm					1	1	1	1	1
15	5024010007-7	Smooth Washer Ø20,3 X Ø46,5 X 4,75mm		1	1	1	2	2	2	2	2
16	5566010026-0	Complete Stabilizer Rod(565mm)	1								
17	6010602832-2	Stabilizer Bar Support		1	1	1					
17	6020602833-8	Stabilizer Bar Support					1	1	1	1	1
18	5024010068-9	Smooth Washer Ø13,3 X Ø35,5 X 3,00mm		12	16	20	20	20	24	28	36
18	5024010068-9	Smooth Washer Ø13,3 X Ø35,5 X 3,00mm		20	24	28	32	36	40	44	52

Item	Code	Product description	All	CRSG 12 Discos	CRSG 14 Discos	CRSG 16 Discos	CRSG 18 Discos	CRSG 20 Discos	CRSG 22 Discos	CRSG 24 Discos	CRSG 28 Discos
19	6020310778-4	Hexagonal Nut 1" 8F Unc Gr5 Ch.1.5/8" Height 25,00mm		11	11	11	9	9	9	9	9
20	6020010420-2	Pressure Washer 1" Media Industry	9								
21	6020311195-1	French Head Bolt 1" X 3.1/4" 8F Unc1A Gr5 Rp Special	8								
22	6020310421-1	French Head Pin Ø9,8 X 61mm	2								
23	6020390308-4	Lock Nma - Type "R" Ø4,5 X 80mm		3	3	3	4	4	4	4	4
24	6020015901-5	Flat Washer Ø26.50 X Ø56.00 X 3.00mm		10	10	10	9	9	9	9	9
25	5558210003-8	Bolt Lock	8								
26	5024010737-3	Washer Ø27 X Ø70 X 6mm	4								
27	5348050009-8	Complete Limiter Of Ø42 X 49,5mm	1								
28	6020310591-9	French Head Pin Ø30,53 X 97mm	1								
29	5432120045-4	French Head Pin Ø30,53 X 71mm	1								
30	6020310598-6	French Head Pin Ø3/4" X 75mm		1	1	1	2	2	2	2	2
31	6020310595-1	French Head Pin Ø1" X 105mm	1								
32	6020310665-6	French Head Pin Ø30,53 X 85mm	1								
33	6020311104-8	Hexagonal Head Bolt 3/4" X 5.1/2" 10F Unc1A Gr5 Rp		3	3	3					
33	6020311140-4	Hexagonal Head Bolt 1" X 7" 8F Unc1A Gr5 Rp					4	4	4	4	4
34	6020050118-0	Cotterpin 1/4" X 2.1/2"	1								
35	6020050116-3	Cotterpin 1/4" X 2"	2								
36	6020310242-1	Square Head Bolt 3/4" X 3.1/2" 10F Unc1A Gr5 Rp	4								
37	6020310770-9	Hexagonal Nut 3/4" 10F Unc Gr5 Ch.1.7/32" Height 18,50mm	4								
38	6020310760-1	Hexagonal Nut 5/8" 11F Unc Gr5 Ch.1.1/16" Height 15,00mm	1								
39	6020310144-1	French Head Bolt 1/2" X 2" 12F W Gr2 Rp Special		12	16	20	20	20	24	28	36
39	6020310144-1	French Head Bolt 1/2" X 2" 12F W Gr2 Rp Special		20	24	28	32	36	40	44	52
40	6020010410-5	Pressure Washer 1/2" Media Industry		13	17	21	21	21	25	29	37
40	6020010410-5	Pressure Washer 1/2" Media Industry		21	25	30	33	37	41	45	53
41	6020310754-7	Hexagonal Nut 1/2" 12F W Gr5 Ch.7/8" Height 12,00mm		12	16	20	20	20	24	28	36
41	6020310754-7	Hexagonal Nut 1/2" 12F W Gr5 Ch.7/8" Height 12,00mm		20	24	28	32	36	40	44	52
42	6020010420-2	Pressure Washer 1" Media Industry		2	2	2					
42	6020010424-5	Pressure Washer 1.1/4" Media Industry					2	2	2	2	2
43	6020310793-8	Hexagonal Nut 1.1/4" 7F Unc Gr5 Ch.2" Height 31,00mm					2	2	2	2	2
44	6020050114-7	Cotterpin 1/4" X 1.1/2"	1								
45	6020310431-9	Hexagonal Head Bolt 1" X 4" 8F Unc1A Gr5 Rp	1								
46	6020310784-9	Hexagonal Nut 3/4" 10F Unc Gr5 Ch.1.1/4" Height 11,00mm	4								
47	6020390301-7	Lock Ø5,75 X 50mm	1								
48	5460040002-1	Clamp "U" 26 X 95 X 6,4	1								
49	6020311045-9	Hexagonal Head Bolt 1/2" X 1" 12F W Gr5 Rt	1								
50	5498100003-2	Complete Wheel 600 X 16		2	2	2					
50	5498100005-9	Complete Wheel 750 X 16				2	2	2	2	2	2
51	5372012701-2	Hose 3/8" x 5700mm W/ 1TCG 1TRF		1	1	1					
51	5372011086-1	Hose 3/8" X 6400mm W/ 1Tcg And 1Trf					1	1	1	1	1
52	5530060020-3	Hoses Support	1								
53	6020010513-6	Flat Washer Ø20 X Ø35 X 3mm	4								

BALDAN

• Table CRSG 12 to 28 Discs

Item	Code	Product description	All	CRSG 12 Discos	CRSG 14 Discos	CRSG 16 Discos	CRSG 18 Discos	CRSG 20 Discos	CRSG 22 Discos	CRSG 24 Discos	CRSG 28 Discos
54	5348050006-3	Complete Limiter Of Ø42 X 25mm	1								
55	5372012700-4	Hose 3/8" X 5300mm com 1TCG E 1TRF		1	1	1					
55	5372011085-3	Hose 3/8" X 6000mm W/ 1Tcg And 1Trf					1	1	1	1	1
56	5040010851-7	Stabilizer Bar	1								
57	5352050040-1	Rear Scraper (2.1/2" X 5/8" With Slotted Hole)		3	4	5	5	5	6	7	9
58	5040010852-5	Complete Hitch Transversal Bar		1	1	1					
58	5040010873-8	Complete Hitch Transversal Bar					1	1	1	1	1
59	5558040025-5	Piston Lock Of 348mm		1	1	1					
59	5558010567-9	Piston Lock Of 410mm					1	1	1	1	1
60	5204010537-9	Hub of Wheel Articulation Shaft	2								
61	6020010414-8	Pressure Washer 3/4" Media Industry		3	3	3					
61	6020010420-2	Pressure Washer 1" Media Industry					4	4	4	4	4
62	6020310770-9	Hexagonal Nut 3/4" 10F Unc Gr5 Ch.1.7/32" Height 18,50mm		3	3	3					
62	6020310778-4	Hexagonal Nut 1" 8F Unc Gr5 Ch.1.5/8" Height 25,00mm					4	4	4	4	4
63	6020350400-7	Rim 4,50X16 F16.388 43/03 (Harrow)		2	2	2					
63	6020350402-3	Rim 5,5" X 16" 16.392					2	2	2	2	2
64	6020310400-9	Tyre 600 X 16 X 6 Ply		2	2						
64	6020310406-8	Tyre 750 X 16 X 10 Ply				2	2	2	2	2	2
65	6020050350-6	Inner Tube 600X16		2	2	2					
65	6020050356-5	Inner Tube 750X16					2	2	2	2	2
66	6010600463-6	Spring Bushing	2								
67	6020310778-4	Hexagonal Nut 1" 8F Unc Gr5 Ch.1.5/8" Height 25,00mm	2								
68	5566080078-5	Rod Of Ø1" X 565mm	1								
69	6020250293-0	Helical Spring Ø43 X Ø67 X 157mm	1								
		Optional									
70	5498100072-5	Complete Wheel 11 X 15 - Bl 10 Ply					2	2	2	2	2
71	6020350397-3	Rim 10.0 Ply x15" (Wheel 11X15)					2	2	2	2	2
72	6020310413-0	Tyre 11X15 Bl 10Ply					2	2	2	2	2
73	6020050362-0	Inner Tube Pa 15/16					2	2	2	2	2
74	5352050048-7	Rear Scraper		3	4	5	5	5	6	7	9
74	5352050048-7	Rear Scraper		5	6	7	8	9	10	11	13
75	5352050049-5	Front Scraper		3	4	5	5	5	6	7	9
75	5352050049-5	Front Scraper		5	6	7	8	9	10	11	13
76	5022012129-9	Rear Gang CRSG 20 Discs (for finishing discs)						1			
76	5022011973-1	Rear Gang CRSG 28 Discs (for finishing discs)									1
*77	5084010324-0	Hitch Drawbar for Hydraulic Field Jack		1	1	1					
*77	5084010300-2	Hitch Drawbar for Hydraulic Field Jack					1	1	1	1	1
78	6020370264-0	Complete Support Of Lifting (Hydraulic Field Jack)	1								
79	6020350400-7	Rim 4,50X16 F16.388 43/03 (Harrow)		1	1	1					
80	6020050350-6	Inner Tube 600X16		1	1	1					
81	6020310376-2	Tyre 650 X 16 X 08		1	1	1					
82	5498010014-9	Complete Wheel 650 X 16 X 8		1	1						

• Hitch Drawbar CRSG 12 to 16 Discs

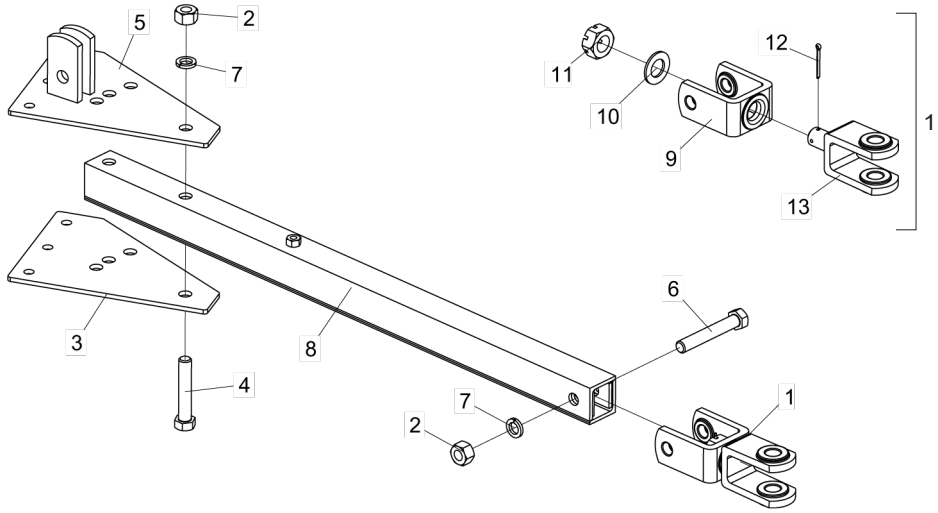

Item	Code	Product description	All	Without Pin for Hydraulic Field Jack	With Pin for Hydraulic Field Jack
1	5332010094-8	Hitch Shackle	1		
2	6020310778-4	Hexagonal Nut 1" 8F Unc Gr5 Ch.1.5/8" Height 25,00Mm	3		
3	5136110028-3	Adjustment Plate	1		
4	6020311136-6	Hexagonal Head Bolt 1" X 5.1/2" 8F Unc1A Gr5 Rp	2		
5	5136110002-0	Adjustment Upper Plate	1		
6	6020311139-0	Hexagonal Head Bolt 1" X 6.1/2" 8F Unc1A Gr5 Rp	1		
7	6020010420-2	Pressure Washer 1" Media Industry	3		
8	5084030014-2	Hitch Drawbar		1	
8	5084010325-8	Hitch Drawbar for Hydraulic Field Jack			1
9	6010602853-5	Large Type "U" Shackle Support	1		
10	5024010720-9	Smooth Washer Of Ø39,5 X 70 X 4,75Mm	1		
11	6020310348-7	Nut M29 X 3,00 Mb Cl8 Ch.60Mm H.30,00Mm Without Crown	1		
12	6020050118-0	Cotterpin 1/4" X 2.1/2"	1		
13	5530016587-6	Small Type "U" Shackle Support	1		

• Hitch Drawbar CRSG 18 to 28 Discs

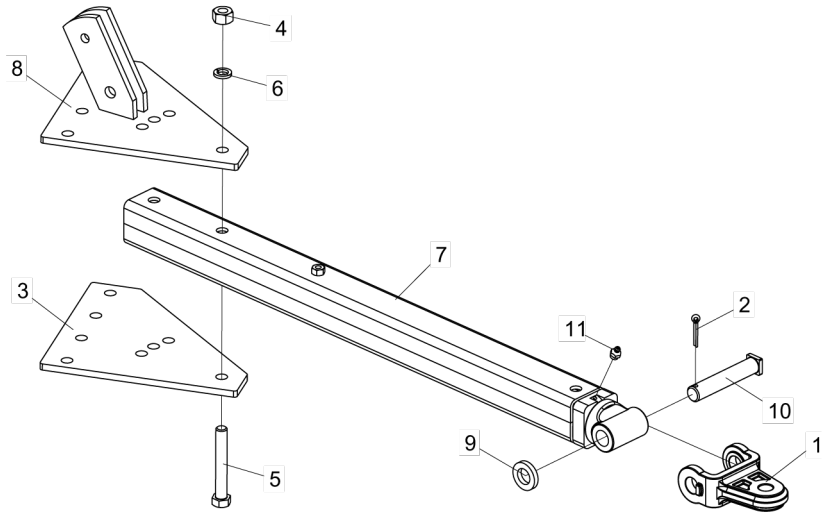

Item	Code	Product description	All	Without Pin for Hydraulic Field Jack	With Pin for Hydraulic Field Jack
1	6010602851-9	Support "U"	1		
2	6020050122-8	Cotterpin 3/8" X 2.1/2"	1		
3	5136110063-1	Upper And Lower Plate Of Drawbar	1		
4	6020310778-4	Hexagonal Nut 1" 8F Unc Gr5 Ch.1.5/8" Height 25,00Mm	2		
5	6020311140-4	Hexagonal Head Bolt 1" X 7" 8F Unc1A Gr5 Rp	2		
6	6020010420-2	Pressure Washer 1" Media Industry	2		
7	5084010298-7	Hitch Drawbar		1	
7	5084010299-5	Hitch Drawbar for Hydraulic Field Jack			1
8	5136016860-7	Adjustment Upper Plate Of Drawbar	1		
9	5024010217-7	Smooth Washer Ø39 X Ø68 X 12,00Mm	1		
10	5432040003-4	Square Head Pin Ø37,5 X 190Mm	1		
11	6020130108-7	Grease Fitting 1/8"	1		

• Wheel Articulation Shaft

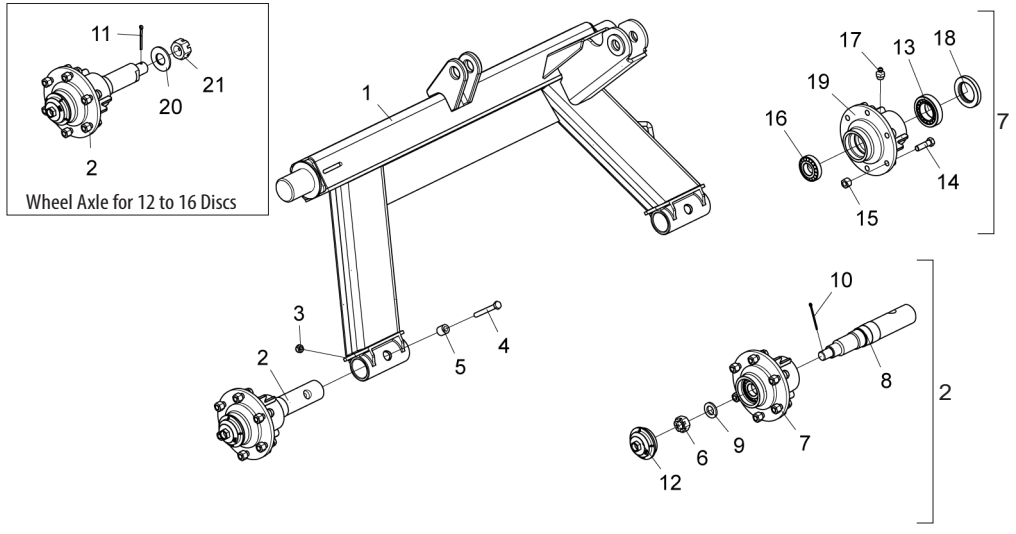

Item	Code	Product description	All	12 to 16 Discos	18 to 28 Discos
1	5232013021-2	Wheel Articulation Shaft		1	
1	5232012188-4	Wheel Articulation Shaft			1
2	5232013045-0	Wheel Shaft		2	
2	5232012189-2	Wheel Shaft			2
3	6020310847-0	Self-Locking Nut With Nylon M12 X 1 ,75 Ma Cl8 Ch.19Mm H.12,00Mm			2
4	6020317451-1	Hexagonal Head Bolt M12 X 1,75 X 100Mm Cl8.8 Rp			2
5	5080010155-4	Bushing Of The Spring Rod			2
6	6020310800-4	Nut 1" 14F Uns Gr5 Ch.1.1/2" Height 22,00Mm	2		
7	5204010535-2	Complete Wheel Hub	2		
8	5232013020-4	Shaft 353mm		2	
8	5232012190-6	Shaft Ø2.1/4" X 355mm			2
9	5024010039-5	Smooth Washer Ø26,2 X Ø44 X 4,75Mm	2		
10	6020050100-7	Cotterpin 1/8" X 1.3/4"	2		
11	6020050110-4	Cotterpin 3/16" X 2.1/2"		2	
12	5096010053-8	Wheel Hub Cap	2		
13	6020350056-7	Bearing 32210	2		
14	6020310998-1	Hexagonal Head Bolt 9/16" X 2" 18F Unf1A Gr5 Rp	12		
15	6020310816-0	Double Conic Hexagonal Nut Of Wheel 9/16" 18F Unf Gr5 Ch.7/8" Height 19,00Mm	12		
16	6020350080-0	Bearing 30207	2		
17	6020130108-7	Grease Fitting 1/8"	2		
18	6020350224-1	Retainer Ø55,00 X Ø90,00 X 12,50Mm	2		
19	5204010536-0	Wheel Hub	2		
20	5024011017-0	Washer Ø32,50 x Ø70 x 4,75mm		2	
21	6020318177-1	Hex Castle Nut 1.1/4" 12F UNF Gr2 Ch.1.7/8" Height 27,8mm		2	

• Hydraulic Cylinder

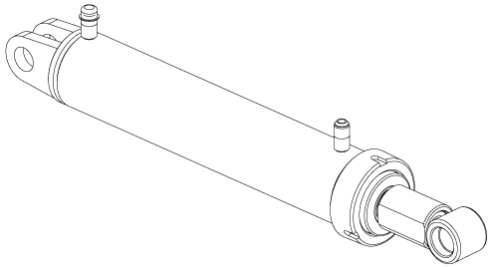

For replacement parts, please check the cylinder liner - The Baldan code, the manufacturer's code and name and the date of manufacture.

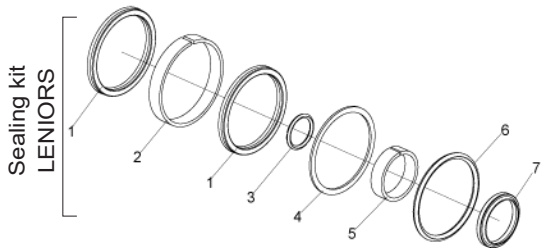

Code	Product description	All
J027637	Cleaner D-1625	1
	Ring Guia 6W8-1875-495	1
	Gasket B 1870-1625-375B	1
	O-Ring (Tampa) 2-140	1
	O-Ring 2-226	1
	Ring Parbak 8-225	1
	Ring GuideW2-2250-500	1
	Gasket Std 2500-1750	1
	O-Ring 2-215	1
60201901874	Repair kit Leniors J027637	1

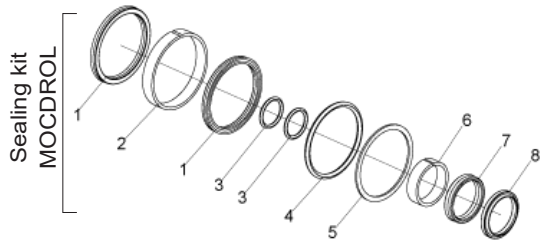

Code	Product description	All
49101027	Gasket 2500-2750	2
	Guide Ring W2-3250-500 (Ø3.1/4" x 1/2")	1
	O'Ring 2-222	2
	O'Ring 2-232	1
	Ring Parback 8-232	1
	Guide Ring 6W8-1826-495 (Ø41,22 x 47,62 x 1/2")	1
	Gasket 6-1970-1574-354B	1
	Cleaner 6D-1574	1
6020190167-0	Repair Kit Mocdrol 49101027	1

• Discs Section

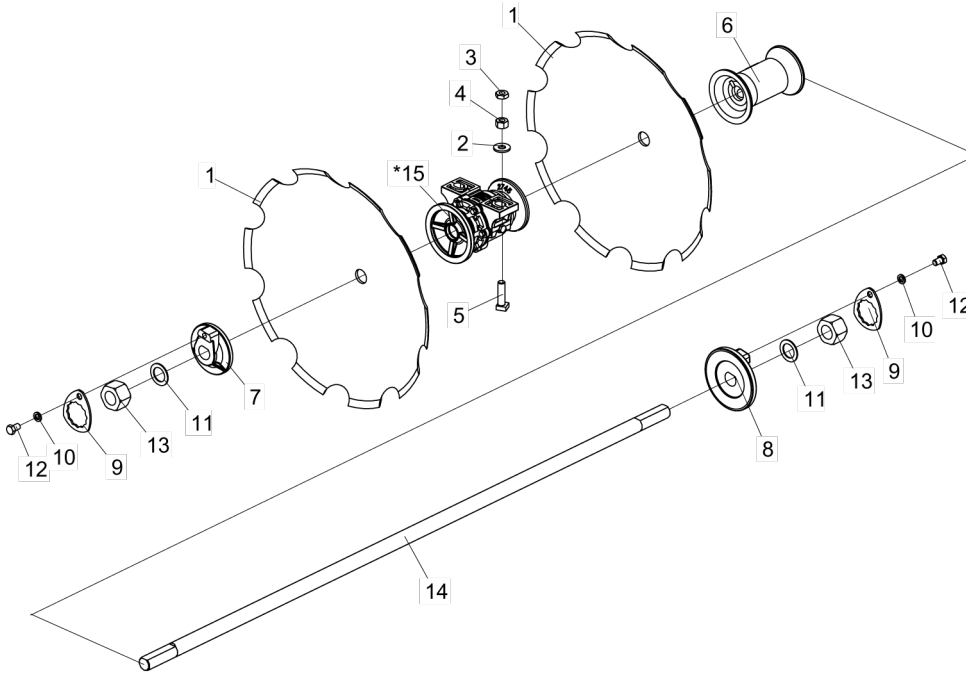

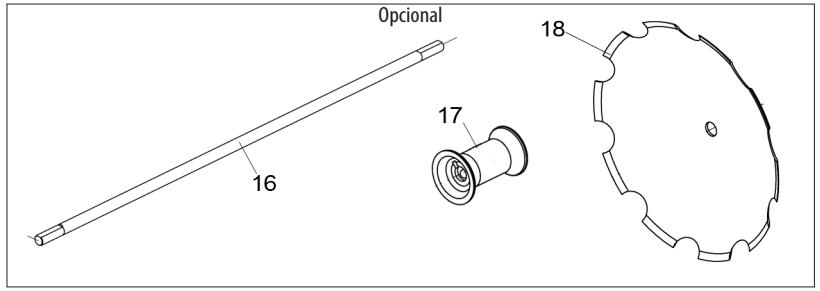

Item	Code	Prooduct description	12 Discs	14 Discs	16 Discs	18 Discs	20 Discs	22 Discs	24 Discs	28 Discs
1	2667420262-7	Concave Plain Disc Blade 24 X 5,00 Hc Rd 1.5/8 Single Bevel	12	14	16	18	20	22	24	28
1	2667430262-1	Concave Plain Disc Blade 24 X 6,00 Hc Rd 1.5/8 Single Bevel	12	14	16	18	20	22	24	28
1	2667430273-7	Concave Plain Disc Blade 24 X 6,00 Hc Rd 1.5/8 Internal Bevel	12	14	16	18	20	22	24	28
1	2767420262-3	Concave Notched Disc Blade 24 X 5,00 Hc Rd 1.5/8 Single Bevel	12	14	16	18	20	22	24	28
1	2767420273-9	Concave Notched Disc Blade 24 X 5,00 Hc Rd 1.5/8 Internal Bevel	12	14	16	18	20	22	24	28
1	2767430262-8	Concave Notched Disc Blade 24 X 6,00 Hc Rd 1.5/8 Single Bevel	12	14	16	18	20	22	24	28
1	2767430273-3	Concave Notched Disc Blade 24 X 6,00 Hc Rd 1.5/8 Internal Bevel	12	14	16	18	20	22	24	28
1	2767470262-6	Concave Notched Disc Blade 24 X 7,50 Hc Rd 1.5/8 Single Bevel	12	14	16	18	20	22	24	28
1	2767470273-1	Concave Notched Disc Blade 24 X 7,50 Hc Rd 1.5/8 Internal Bevel	12	14	16	18	20	22	24	28
1	2669420262-3	Concave Plain Disc Blade 26 X 5,00 Hc Rd 1.5/8 Single Bevel	12	14	16	18	20	22	24	28
1	2669430262-8	Concave Plain Disc Blade 26 X 6,00 Hc Rd 1.5/8 Single Bevel	12	14	16	18	20	22	24	28
1	2669430273-3	Concave Plain Disc Blade 26 X 6,00 Hc Rd 1.5/8 Internal Bevel	12	14	16	18	20	22	24	28
1	2669470273-1	Concave Plain Disc Blade 26 X 7,50 Hc Rd 1.5/8 Internal Bevel	12	14	16	18	20	22	24	28
1	2769420262-0	Concave Notched Disc Blade 26 X 5,00 Hc Rd 1.5/8 Single Bevel	12	14	16	18	20	22	24	28
1	2769420273-5	Concave Notched Disc Blade 26 X 5,00 Hc Rd 1.5/8 Internal Bevel	12	14	16	18	20	22	24	28
1	2769430262-4	Concave Notched Disc Blade 26 X 6,00 Hc Rd 1.5/8 Single Bevel	12	14	16	18	20	22	24	28
1	2769430273-0	Concave Notched Disc Blade 26 X 6,00 Hc Rd 1.5/8 Internal Bevel	12	14	16	18	20	22	24	28
1	2769470262-2	Concave Notched Disc Blade 26 X 7,50 Hc Rd 1.5/8 Single Bevel	12	14	16	18	20	22	24	28
1	2769470273-8	Concave Notched Disc Blade 26 X 7,50 Hc Rd 1.5/8 Internal Bevel	12	14	16	18	20	22	24	28
1	2670430262-1	Concave Plain Disc Blade 28 X 6,00 Hc Rd 1.5/8 Single Bevel	12	14	16	18	20	22	24	28
1	2670430273-7	Concave Plain Disc Blade 28 X 6,00 Hc Rd 1.5/8 Internal Bevel	12	14	16	18	20	22	24	28
1	2770420262-3	Concave Notched Disc Blade 28 X 5,00 Hc Rd 1.5/8 Single Bevel	12	14	16	18	20	22	24	28
1	2770420273-9	Concave Notched Disc Blade 28 X 5,00 Hc Rd 1.5/8 Internal Bevel	12	14	16	18	20	22	24	28
1	2770430262-8	Concave Notched Disc Blade 28 X 6,00 Hc Rd 1.5/8 Single Bevel	12	14	16	18	20	22	24	28
1	2770430273-3	Concave Notched Disc Blade 28 X 6,00 Hc Rd 1.5/8 Internal Bevel	12	14	16	18	20	22	24	28
1	2770470262-6	Concave Notched Disc Blade 28 X 7,50 Hc Rd 1.5/8 Single Bevel	12	14	16	18	20	22	24	28
1	2770470273-1	Concave Notched Disc Blade 28 X 7,50 Hc Rd 1.5/8 Internal Bevel	12	14	16	18	20	22	24	28
2	5024010007-7	Smooth Washer Ø20,3 X Ø46,5 X 4,75mm	8	8	8	12	16	16	16	16
3	6020310784-9	Hexagonal Nut 3/4" 10F Unc Gr5 Ch.1.1/4" Height 11,00mm	8	8	8	12	16	16	16	16
4	6020310770-9	Hexagonal Nut 3/4" 10F Unc Gr5 Ch.1.7/32" Height 18,50mm	8	8	8	12	16	16	16	16
5	6020310240-5	Square Head Bolt 3/4" X 2.3/4" 10F Unc1A Gr5 Excentric Rp	8	8	8	12	16	16	16	16
6	5120010056-9	Spool 225mm for Shaft Ø1.5/8"(M.R)	6	8	10	10				
6	5120010011-9	Spool 225mm For Shaft ø1.5/8"					8	10	12	16
7	5024010366-1	Convex Washer Ø1.5/8"	2	2	2	2	4	4	4	4
8	5024010365-3	ConcaveWasher Ø1.5/8"	2	2	2	2	4	4	4	4
9	5558010096-0	Lock Nut Shaft	4	4	4	4	8	8	8	8
10	6020010412-1	Pressure Washer 5/8" Media Industry	4	4	4	4	8	8	8	8
11	5024010367-0	Smooth Washer Ø43 X Ø78 X 3,00mm	4	4	4	4	8	6	6	6
12	6020310183-2	Hexagonal Head Bolt 5/8" X 1" 11F Unc1A Gr2 Rt	4	4	4	4	8	8	8	8
13	5456010072-0	Hexagonal Nut Ø1.5/8" 7Fpp-W Gr5 Wrench 69mm Height 44mm (Special)	4	4	4	4	8	8	8	8
14	5232010345-2	Shaft Ø1.5/8" X 1390mm	2					2	4	
14	5232050005-2	Shaft Ø1.5/8" X 1620mm		2						4
14	5232010625-7	Shaft Ø1.5/8" X 1880mm			2					
14	5232050159-8	Shaft Ø1.5/8" X 2110mm				2				
14	5232050267-5	Shaft Ø1.5/8" X 1160mm					4	2		
*15	5368010321-2	Full Axial (Oil)Front/Rear Bearing Of 250mm Without Protection F/Shaft Ø1.5/8"(Duo Cone Seal)	4	4	4	6	8	8	8	8
		Optional								
*15	5368010356-5	Comp.Axial(Oil)Front/Rear Bearing Of 250mm W/Protection For Shaft Ø1.5/8"(Duo Cone Seal)								
*15	5368010293-3	Comp.Front/Rear Grease Bearing Of 250mm Without Protection For Shaft Ø1.5/8"								
*15	5368010289-5	Comp.Front/Rear Grease Bearing Of 250mm W/Protection For Shaft Ø1.5/8"								
*15	5368010850-8	Full Front/Rear Bearing 250mm Oil Without Protection For Shaft Ø1.5/8" Between Holes 159mm								
*15	5368010888-5	Full Front/Rear Bearing 250mm Oil W/ Shaft Protection Ø1.5/8" Between Holes 159mm								
16	5232050267-5	Shaft Ø1.5/8" X 1160mm					3			
16	5232010345-2	Shaft Ø1.5/8" X 1390mm					1			
16	5232050260-8	Shaft Ø1.5/8" X 1850mm								1
16	5232050005-2	Shaft Ø1.5/8" X 1620mm								3
17	5120010056-9	Spool 225mm for Shaft Ø1.5/8"(M.R)								17
18	2767430273-3	Concave Notched Disc Blade 24 X 6,00 Hc Rd 1.5/8 Internal Bevel					1			1

* Item 15 - Axial Bearing (Oil) / Grease Bearing - See page 10

* Item 15 - Oil Bearing - See page 11

• Axial Bearing (Oil)

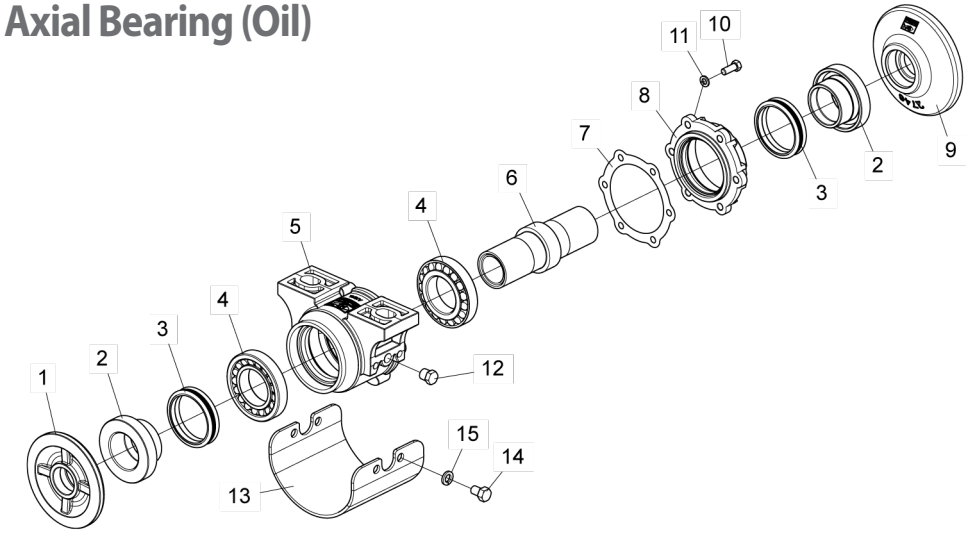

Item	Code	Product description	All	With Protection	Without Protection
1	5024010730-6	Convex Washer	1		
2	5080010247-0	Bushing 1.5/8"	2		
3	6020010297-8	Oring Ø77 X Ø93mm	2		
4	6020350072-9	Bearing 30212	2		
5	5368010698-0	Spare Front/Rear Oil Bearing W/Protection		1	
5	5368010697-1	Spare Front/Rear Oil Bearing (Without Protection			1
6	5080010686-6	Bearing Bushing	1		
7	6020190107-6	Gascket Ø112 X Ø143 X 1/64"	6		
8	5538010155-5	Bearing Cover	1		
9	5024010729-2	Concave Washer	1		
10	6020310021-6	Hexagonal Head Bolt 3/8" X 1" 16F Unc1A Gr5 Rt	6		
11	6020010406-7	Pressure Washer 3/8" Media Industry	6		
12	5081010007-6	Hexagonal Head Plug 3/4" - R.3/8" - 19F - Bspt(Gas)	2		
13	5464010106-0	Bearing Protection		1	
14	6020310062-3	Hexagonal Head Bolt 1/2" X 3/4" 13F Unc Gr5 Rt		4	
15	6020010410-5	Pressure Washer 1/2" Media Industry		4	

• Grease bearing

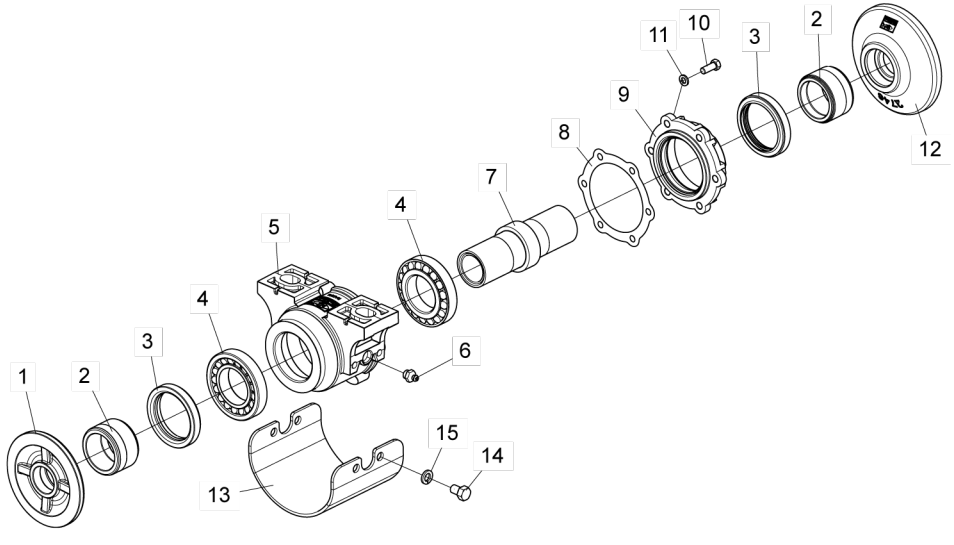

Item	Code	Product description	All	With Protection	Without Protection
1	5024010730-6	Convex Washer	1		
2	5080080007-0	Bushing	2		
3	6020350235-7	Retainer Ø78,00 X Ø100,00 X 17,50mm	2		
4	6020350072-9	Bearing 30212	2		
5	5368010696-3	Spare Front/Rear Grease Bearing W/Protection		1	
5	5368010695-5	Spare Front/Rear Grease Bearing (Without Protection			1
6	6020130108-7	Grease Fitting 1/8"	2		
7	5080010686-6	Bearing Bushing	1		
8	6020190107-6	Gascket Ø112 X Ø143 X 1/64"	6		
9	5538010089-3	Bearing Cover	1		
10	6020310021-6	Hexagonal Head Bolt 3/8" X 1" 16F Unc1A Gr5 Rt	6		
11	6020010406-7	Pressure Washer 3/8" Media Industry	6		
12	5024010729-2	Concave Washer	1		
13	5464010106-0	Bearing Protection		1	
14	6020310062-3	Hexagonal Head Bolt 1/2" X 3/4" 13F Unc Gr5 Rt		4	
15	6020010410-5	Pressure Washer 1/2" Media Industry		4	

• Oil Bearing

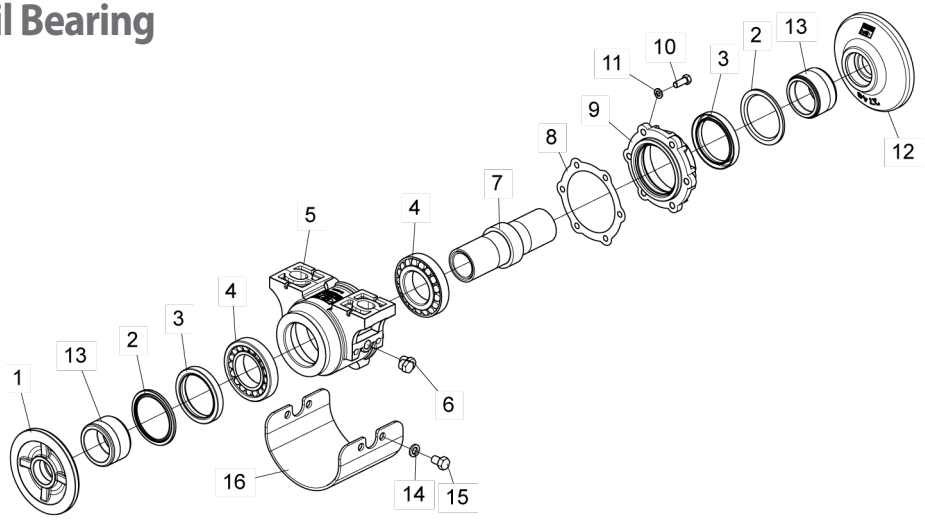

Item	Code	Product description	All	With Protection	Without Protection
1	5024010700-4	Convex Washer Of Bearing	1		
2	6020010478-4	Washer 078100 (Joinseal) 1057 (Arca)	2		
3	6020350228-4	Retainer Ø78,00 X Ø100 X 13,00mm	2		
4	6020350072-9	Bearing 30212	2		
5	5368010885-0	Single Front/Rear Bearing Oil With Protection		1	
5	5368010797-8	Single Front/Rear Bearing Oil Without Protection			1
6	5081010007-6	Hexagonal Head Plug 3/4" - R.3/8" - 19F - Bspt(Gas)	2		
7	5080010686-6	Bearing Bushing	1		
8	6020190107-6	Gascket Ø112 X Ø143 X 1/64"	6		
9	5538010089-3	Bearing Cover	1		
10	6020310021-6	Hexagonal Head Bolt 3/8" X 1" 16F Unc1A Gr5 Rt	6		
11	6020010406-7	Pressure Washer 3/8" Media Industry	6		
12	5024010699-7	Concave Washer Of Bearing	1		
13	5080080007-0	Bushing	2		
15	6020310062-3	Hexagonal Head Bolt 1/2" X 3/4" 13F Unc Gr5 Rt		4	
14	6020010410-5	Pressure Washer 1/2" Media Industry		4	
16	5464010106-0	Bearing Protection		1	

• Stickers

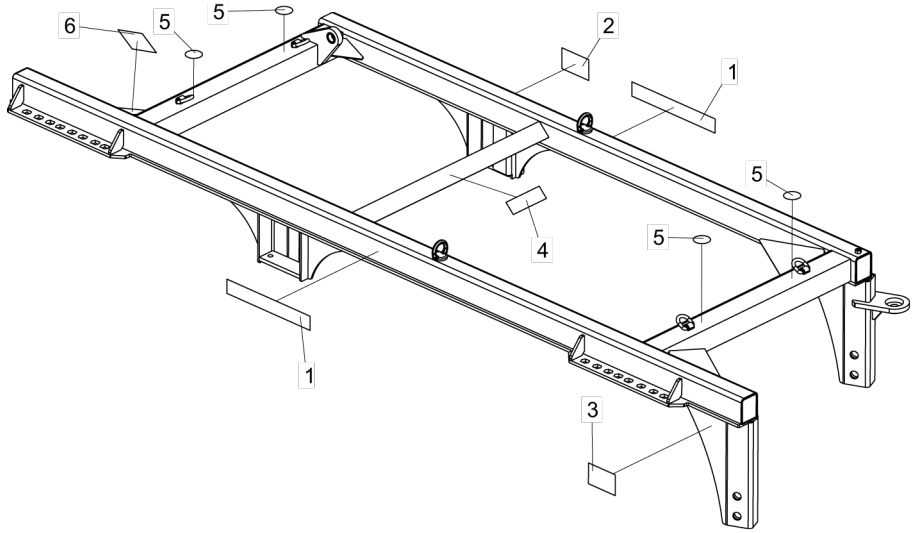

Item	Code	Product description	All
1	6020071096-0	Sticker Crsg-Baldan (500 X 65Mm)	2
2	5206010308-9	Sticker Hydraulic Hoses Warning(150 X 95Mm)	1
3	5206010310-0	Sticker Disc Warning (150 X 95Mm)	1
4	6020070886-8	Sticker Lubricate And Retighten (58 X 195Mm)	1
5	6020072250-0	Sticker Hook-up Point(Ø70mm)	4
6	5206010150-7	Sticker - Warning -Place Piston Lock For Transport	1

Item 1

Item 2

Item 3

Item 4

Item 5

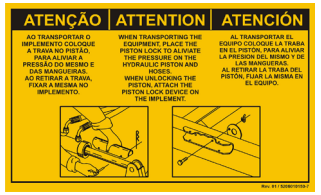

Item 6

BALDAN

Avenida Baldan, 1500
Nova Matão
15.993-900
Matão/SP - Brasil
sac@baldan.com.br
export@baldan.com.br

+55 16 3221 6500
baldan.com.br