Parts Catalog

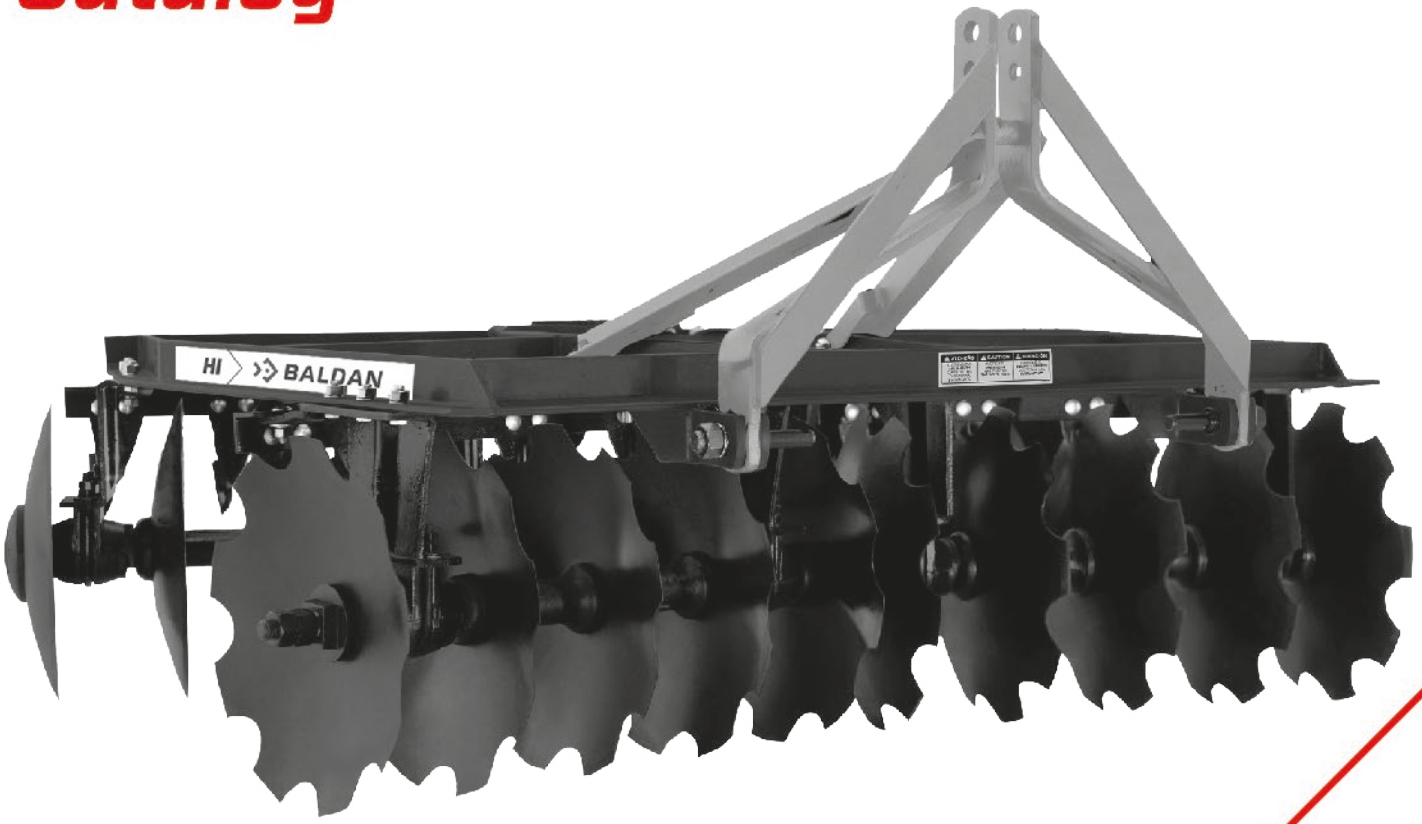

HI

Mounted Disc Harrow

BALDAN

Index

HI *4*
Table HI *5*
Discs Section *6*
Friction Bearing *7*
Stickers *8*

BALDAN

• HI

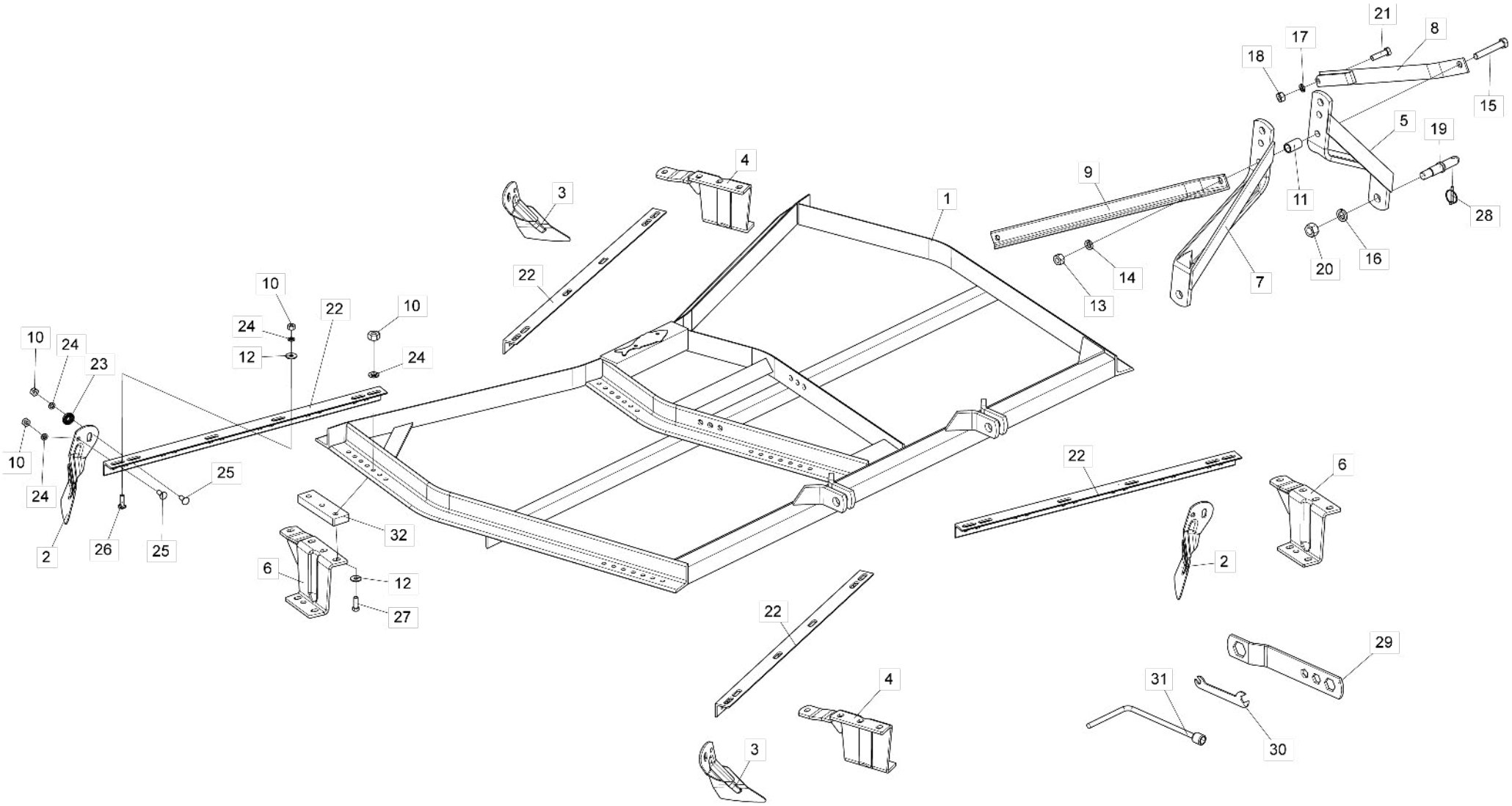
21
8
17
18
15
5
19
9
11
28
4
3
1
22
14
13
7
20
16
10
22
10
24
12
24
10
24
23
10
24
25
2
26
25
32
6
12
27
22
6
2
22
29
4
31
3
30

• Table HI

Item	Code	Product description	All	10 discs	16 discs	20 discs	24 discs	28 discs	32 discs
1	5022100006-1	Gang Hi - 10 Discs		1					
1	5022012348-8	Gang HI - 16 Discs			1				
1	5022012349-6	Gang HI - 20 Discs				1			
1	5022012350-0	Gang HI - 24 Discs					1		
1	5022010812-8	Gang Hi - 28 Discs						1	
1	5022010813-6	Gang Hi - 32 Discs							1
2	5352050016-9	Rear Scraper		4	7	9	11	13	15
3	5352050015-0	Front Scraper		4	7	9	11	13	15
4	5522050014-3	Left Complete Shoe		2	4	4	4	4	5
5	5136050028-8	Right Plate Of Hitch Of 3 Point	1						
6	5522050013-5	Right Complete Shoe		2	4	4	4	4	5
7	5136050029-6	Left Plate Of Hitch Of 3 Point	1						
8	5072020029-2	Arm 2" X 5/8" X 730mm Complete		1					
8	5072020002-0	Adjustment Left Arm 3 Point Hitch			1	1			
8	5072020004-7	Adjustment Left Arm 3 Point Hitch					1		
8	5072020006-3	Adjustment Left Arm 3 Point Hitch						1	1
9	5072020003-9	Adjustment Right Arm 3 Point Hitch			1	1			
9	5072020005-5	Adjustment Right Arm 3 Point Hitch					1		
9	5072020007-1	Adjustment Right Arm 3 Point Hitch						1	1
10	6020310754-7	Hexagonal Nut 1/2" 12F W Gr5 Ch.7/8" Height 12,00mm		28	60	68	76	86	102
11	5080020370-5	Bushing Of Ø23 X Ø32 X 55mm			1	1	1	1	1
12	5024010068-9	Smooth Washer Ø13,3 X Ø35,5 X 3,00mm		4	32	46	32	46	46
13	6020310770-9	Hexagonal Nut 3/4" 10F Unc Gr5 Ch.1.7/32" Height 18,50mm	1						
14	6020010414-8	Pressure Washer 3/4" Media Industry	1						
15	6020311103-0	Hexagonal Head Bolt 3/4" X 5" 10F Unc1A Gr5 Rp	1						
16	6020010420-2	Pressure Washer 1" Media Industry	2						
17	6020010414-8	Pressure Washer 3/4" Media Industry		1					
17	6020010410-5	Pressure Washer 1/2" Media Industry			2	2	2		
17	6020010412-1	Pressure Washer 5/8" Media Industry						2	2
18	6020310770-9	Hexagonal Nut 3/4" 10F Unc Gr5 Ch.1.7/32" Height 18,50mm		1					
18	6020310754-7	Hexagonal Nut 1/2" 12F W Gr5 Ch.7/8" Height 12,00mm			2	2	2		
18	6020310760-1	Hexagonal Nut 5/8" 11F Unc Gr5 Ch.1.1/16" Height 15,00mm						2	2
19	5432050002-0	Hitch Pin 3º Point		2	2	2			
19	5432050003-9	Hitch Pin 3º Point 223mm Category 1 And 3					2		
19	5432050006-3	Hitch Pin 3º Point 166mm Category 3						2	2
20	6020310782-2	Hexagonal Nut 1" 12F Unf Gr5 Ch.1.1/2" Height 22,50mm	2						
21	6020311114-5	Hexagonal Head Bolt 3/4" X 2.3/4" 10F Unc1A Gr5 Rp		1					
21	6020317427-9	Hexagonal Head Bolt 1/2" X 1.3/4" 12F W Gr5 Rt			2	2	2		
21	6020311075-0	Hexagonal Head Bolt 5/8" X 2.1/4" 11F Unc1A Gr5 Rp						2	2
22	5530150068-7	Support Of Scraper Of 700mm		2		4			
22	5530150071-7	Support Of Scraper Of 480mm			4				
22	5530150067-9	Support Of Scraper Of 900mm					4		
22	5530150070-9	Support Of Scraper Of 1055mm						4	
22	5530150069-5	Support Of Scraper Of 1260mm							4

Item	Code	Product description	All	10 discs	16 discs	20 discs	24 discs	28 discs	32 discs
23	5024040001-1	Special Washer Ø14 X Ø40 X 8mm		8	14	18	22	26	30
24	6020010410-5	Pressure Washer 1/2" Media Industry		28	60	50	54	60	70
25	6020311175-7	French Head Bolt 1/2" X 1.5/8" 12F W Gr2 Rt		16	28	36	44	52	60
26	6020310143-3	French Head Bolt 1/2" X 1.5/8" 12F W Gr2 Rt Special		4	8	8	8	8	10
27	6020312001-2	Hexagonal Head Bolt 1/2" X 1.1/2" 12F W Gr5 Rt		8	24	30	24	30	32
27	6020312300-3	Hexagonal Head Bolt 1/2" X 2.1/2" 12F W Gr5 Rp - For 22" Records		8	24	30	24	30	32
28	6020390292-4	Lock Ø8 X 54mm	2						
29	5138090001-0	Wrench For Hexagonal Nut 1.1/4" - 1" - 3/4" - 5/8"	1						
30	5138020001-9	Wrench For Hexagonal Nut 3/8" - 1/2"	1						
31	6020058712-2	Wrench For Hexagonal Nuta de 1/2"	1						
32	5530018784-5	Lifting Bracket P/HI		4	8	8	8	8	10

BALDAN

• Discs Section

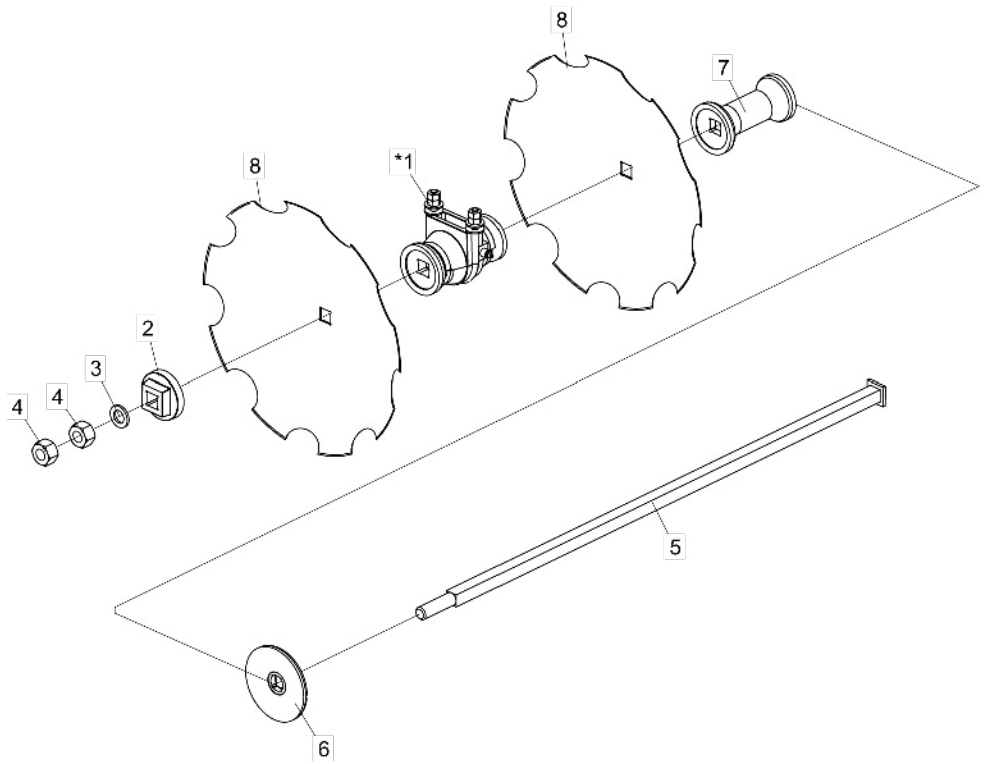

Item	Code	Product description	HI 10 Discs	HI 16 Discs	HI 20 Discs	HI 24 Discs	HI 28 Discs	HI 32 Discs
*1	5368020015-3	Complete Friction Bearing Of 185mm With Shaft Square 1"	4	8	8	8	8	10
2	6010600012-6	Back Stop Washer	2	4	4	4	4	4
3	5024010039-5	Smooth Washer Ø26,2 X Ø44 X 4,75mm	2	4	4	4	4	4
4	6020310778-4	Hexagonal Nut 1" 8F Unc Gr5 Ch.1.5/8" Height 25,00mm	2	4	4	4	4	4
5	5232012364-0	Shaft Q1" X 860mm W/Lock	2		4			
5	5232012363-1	Shaft Q1" X 670mm W/Lock		4				
5	5232012365-8	Shaft Q1" X 1035mm W/Lock				4		
5	5232012366-6	Shaft Q1" X 1230mm W/Lock					4	
5	5232012367-4	Shaft Q1" X 1415mm W/Lock						4
6	6010600048-7	Concave Washer Sq.26,5	2	4	4	4	4	4
7	5120010006-2	Spool 182mm For Square Shaft1"	4	4	8	12	16	18
8	2659342121-9	Concave Plain Disc Blade 16 X 3,00 Hc Sq Countersunk 1 Single Bevel	10	16	20	24	28	32
8	2659362121-8	Concave Plain Disc Blade 16 X 3,50 Hc Sq Countersunk 1 Single Bevel	10	16	20	24	28	32
8	2659392121-1	Concave Plain Disc 16" X 4,00 Fc Q 1" Afe	10	16	20	24	28	32
8	2661342121-0	Concave Plain Disc Blade 18 X 3,00 Hc Sq Countersunk 1 Single Bevel	10	16	20	24	28	32
8	2661392121-3	Concave Plain Disc Blade 18 X 4,00 Hc Sq Countersunk 1 Single Bevel	10	16	20	24	28	32
8	2663342121-7	Concave Plain Disc Blade 20" X 3,00 Fc Sq 1" Countersunk 1 Single Bevel	10	16	20	24	28	32
8	2663362121-6	Concave Plain Disc Blade 20 X 3,50 Hc Sq Countersunk 1 Single Bevel	10	16	20	24	28	32
8	2663392121-0	Concave Plain Disc Blade 20 X 4,00 Hc Sq Countersunk 1 Single Bevel	10	16	20	24	28	32
8	2663402121-2	Concave Plain Disc Blade 20 X 4,50 Hc Sq Countersunk 1 Single Bevel	10	16	20	24	28	32
8	2665392121-6	Concave Plain Disc Blade 22 X 4,00 Hc Sq Countersunk 1 Single Bevel	10	16	20	24	28	32
8	2759342121-5	Concave Notched Disc Blade 16 X 3,00 Hc Sq Countersunk 1 Single Bevel	10	16	20	24	28	32
8	2759362121-4	Concave Notched Disc Blade 16 X 3,50 Hc Sq Countersunk 1 Single Bevel	10	16	20	24	28	32
8	2759392121-8	Concave Notched Disc Blade 16 X 4,00 Hc Sq Countersunk 1 Single Bevel	10	16	20	24	28	32
8	2761342121-7	Concave Notched Disc Blade 18 X 3,00 Hc Sq Countersunk 1 Single Bevel	10	16	20	24	28	32
8	2761362121-6	Concave Notched Disc Blade 18 X 3,50 Hc Sq Countersunk 1 Single Bevel	10	16	20	24	28	32
8	2761392121-0	Concave Notched Disc Blade 18 X 4,00 Hc Sq Countersunk 1 Single Bevel	10	16	20	24	28	32
8	2763342121-3	Concave Notched Disc Blade 20" X 3,00 Fc Sq 1" Countersunk 1 Single Bevel	10	16	20	24	28	32
8	2763362121-2	Concave Notched Disc Blade 20 X 3,50 Hc Sq Countersunk 1 Single Bevel	10	16	20	24	28	32
8	2763392121-6	Concave Notched Disc Blade 20 X 4,00 Hc Sq Countersunk 1 Single Bevel	10	16	20	24	28	32
8	2763402121-9	Concave Notched Disc Blade 20 X 4,50 Hc Sq Countersunk 1 Single Bevel	10	16	20	24	28	32
8	2765392121-2	Concave Notched Disc Blade 22 X 4,00 Hc Sq Countersunk 1 Single Bevel	10	16	20	24	28	32

* Item 1 - See page 7

• Friction Bearing

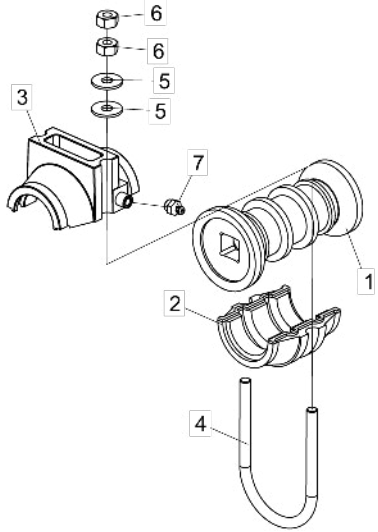

Item	Code	Product description	All
1	6010600009-6	Spool With Ring	1
2	6010600061-4	Lower Friction Bearing	1
3	5368020014-5	Upper Friction Bearing	1
4	5068010012-5	Clamp	1
5	5024010068-9	Smooth Washer Ø13,3 X Ø35,5 X 3,00Mm	4
6	6020310754-7	Hexagonal Nut 1/2" 12F W Gr5 Ch.7/8" Height 12,00Mm	4
7	6020130108-7	Grease Fitting 1/8"	1

• Stickers - Until 04/2023

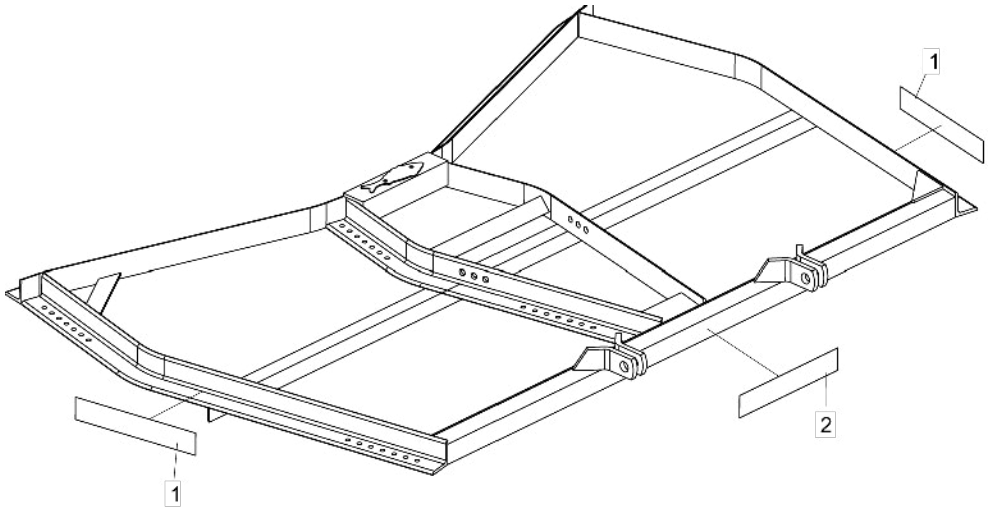

Item	Code	Product description	All
1	6020071023-4	Sticker HI	2
2	6020070886-8	Sticker Lubricate And Retighten (58 X 195Mm)	1

Item 1

Item 2

• Stickers - From 05/2023

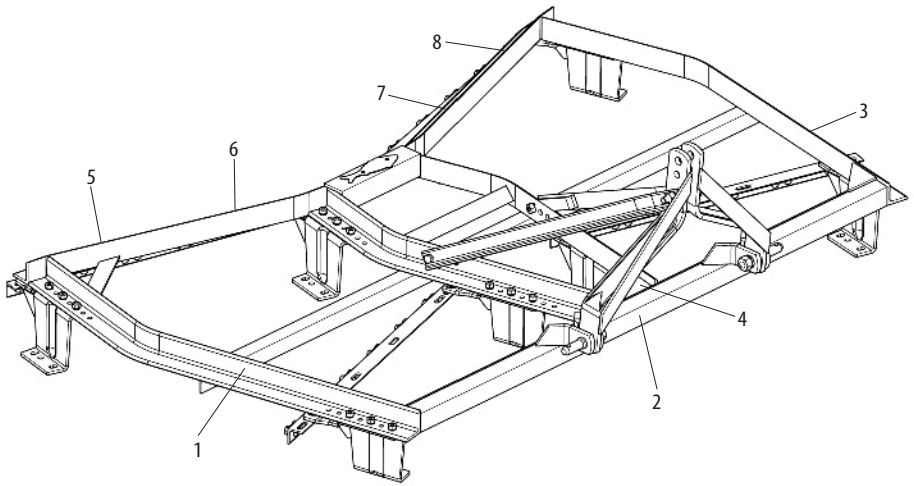

Item	Código	Descrição do produto	Todos	10 Discos	16 Discos	20 Discos	24 Discos	28 Discos	32 Discos
1	6020079148-0	Decalque Baldan Hi (42 X 450mm)		1					
1	6020079154-4	Decalque Baldan Hi (43 X 690mm)			1	1			
1	6020079158-7	Decalque Baldan Hi (37 X 890mm)					1		
1	6020079160-9	Decalque Baldan Hi (50 X 885mm)						1	
1	6020079166-8	Decalque Baldan Hi (55 X 1015mm)							1
2	6020070886-8	Decalque Lubrificar e Reapertar	1						
3	6020079147-1	Decalque Hi Baldan (42 X 450mm)		1					
3	6020079153-6	Decalque Hi Baldan (43 X 690mm)			1	1			
3	6020079157-9	Decalque Hi Baldan (37 X 890mm)					1		
3	6020079159-5	Decalque Hi Baldan (50 X 885mm)						1	
3	6020079165-0	Decalque Hi Baldan (55 X 1015mm)							1
4	6020095955-0	Emblema 70 X 132,6mm	1						
5	6020079152-8	Decalque Lanterna Esquerda (35 X 150mm)		1	1	1	1		
5	6020079164-1	Decalque Lanterna Esquerda (45 X 200mm)						1	1
6	6020079149-8	Decalque Hi (40 X 250mm)		1	1	1	1		
6	6020079161-7	Decalque Hi (50 X 400mm)						1	1
7	6020079150-1	Decalque Baldan (40 X 250mm)		1	1	1	1		
7	6020079162-5	Decalque Baldan (50 X 400mm)						1	1
8	6020079151-0	Decalque Lanterna Direita (35 X 150mm)		1	1	1	1		
8	6020079163-3	Decalque Lanterna Direita (45 X 200mm)						1	1

Item 1

Item 2

Item 3

Item 4

Item 5

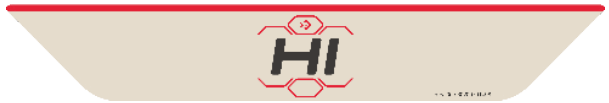

Item 6

Item 7

Item 8

BALDAN

Avenida Baldan, 1500
Nova Matão
15.993-900
Matão/SP - Brasil
sac@baldan.com.br
export@baldan.com.br

+55 16 3221 6500
baldan.com.br