Parts Catalog

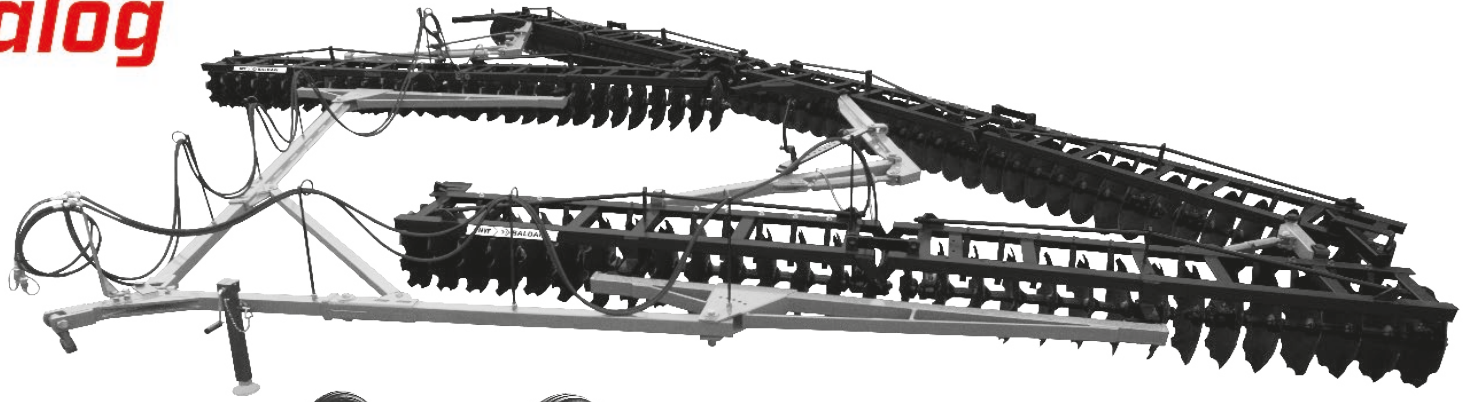

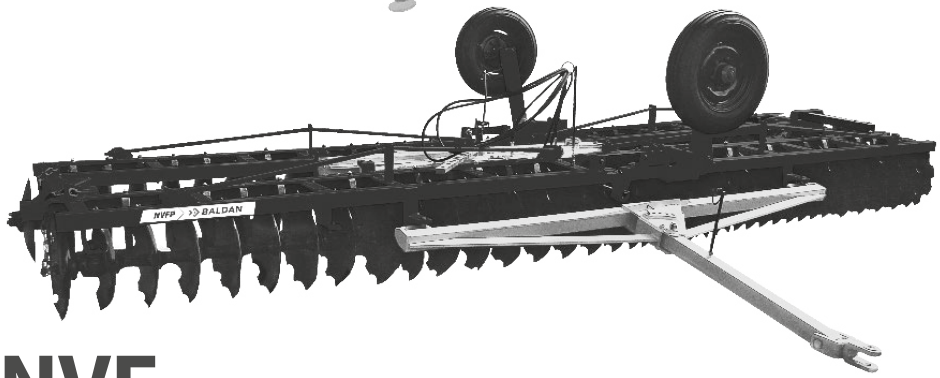

NVF

Drag Type Disc Harrow with Permanent Flotation

NVFP

Drag Type Disc Harrow with Permanent Flotation
With Wheels

BALDAN

Index

NVF (Without Wheels) Mechanical Opening *4*
Table NVF (Without Wheels) Mechanical Opening *5*
NVF (Without Wheels) Hydraulic Opening *6*
Table NVF (Without Wheels) Hydraulic Opening *7-8*
NVF-P (With Wheels) Mechanical Opening *9*
Table NVF-P (With Wheels) Mechanical Opening *10-11*
NVF-P (With Wheels) Hydraulic Opening *12*
Table NVF-P (With Wheels) Hydraulic Opening *13-14*
NVF Tandem (Double Hitch Drawbar) *15*
Table NVF Tandem (Double Hitch Drawbar) *16-17*
Hitch Drawbar *18*
Lock Handle *18*
Front Left Gang NVF-P *19*
Rear Left Gang NVF-P *20*
Complete Regulator *21*
Cylinder of Gangs Articulation *21*
Discs Section NVF/NVF-P *22*
Radial Bearing (Grease) *23*
Radial Bearing (Oil) *23*
Axial Bearing (Oil) *24*
Friction Bearing *24*
Sitckers NVF/NVF-P *25*
Sitckers NVF Tandem *25*

• NVF (Without Wheels) Mechanical Opening

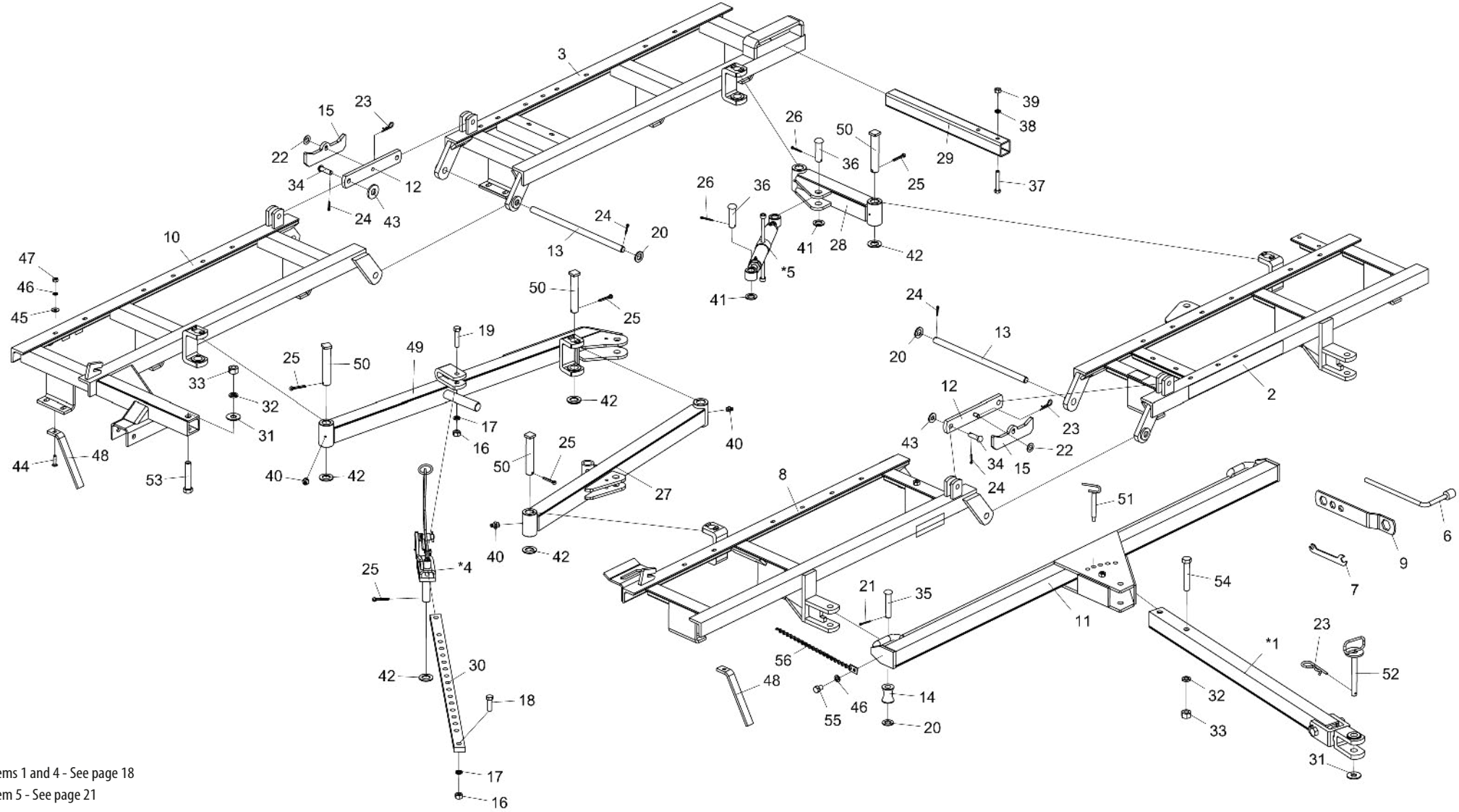

* Items 1 and 4 - See page 18

* Item 5 - See page 21

• Table NVF (Without Wheels) Mechanical Opening

Item	Code	Product description	All	NVF 40 Discs	NVF 44 Discs	NVF 48 Discs	NVF 52 Discs	NVF 56 Discs	NVF 60 Discs	NVF 64 Discs	NVF 68 Discs	NVF 72 Discs
*1	5084030011-8	Complete Hitch Drawbar (Mechanic Opening)	1									
2	5022010451-3	Right Front Gang Nvf-40(Left) Spacing 200Mm		1								
2	5022010077-1	Right Front Gang Nvf-44(Left) Spacing 200Mm			1							
2	5022010073-9	Right Front Gang Nvf-48(Left) Spacing 200Mm				1						
2	5022010460-2	Right Front Gang Nvf-52(Left) Spacing 200Mm					1					
2	5022010466-1	Right Front Gang Nvf-56(Left) Spacing 200Mm						1				
2	5022010472-6	Right Front Gang Nvf-60(Left) Spacing 200Mm							1			
2	5022010478-5	Right Front Gang Nvf-64(Left) Spacing 200Mm								1		
2	5022010484-0	Right Front Gang Nvf-68(Left) Spacing 200Mm									1	
2	5022010490-4	Right Front Gang Nvf-72(Left) Spacing 200Mm										1
3	5022010082-8	Left Rear Gang Nvf-40(Left) Spacing 200Mm		1								
3	5022010078-0	Left Rear Gang Nvf-44(Left) Spacing 200Mm			1							
3	5022010074-7	Left Rear Gang Nvf-48(Left) Spacing 200Mm				1						
3	5022010462-9	Left Rear Gang Nvf-52(Left) Spacing 200Mm					1					
3	5022010468-8	Left Rear Gang Nvf-56(Left) Spacing 200Mm						1				
3	5022010474-2	Left Rear Gang Nvf-60(Left) Spacing 200Mm							1			
3	5022010480-7	Left Rear Gang Nvf-64(Left) Spacing 200Mm								1		
3	5022010486-6	Left Rear Gang Nvf-68(Left) Spacing 200Mm									1	
3	5022010492-0	Left Rear Gang Nvf-72(Left) Spacing 200Mm										1
*4	5468010014-7	Complete Lock Handle	1									
*5	5484010065-3	Complete Regulator	1									
6	6020058710-6	Wrench For Hexagonal Nut 5/8"	1									
7	5138020001-9	Wrench For Hexagonal Nut 3/8" - 1/2"	1									
8	5022010084-4	Right Front Gang Nvfp-40 Spacing 200Mm (Left)		1								
8	5022010455-6	Right Front Gang Nvf-44(Left) Spacing 200Mm			1							
8	5022010459-9	Right Front Gang Nvf-48(Left) Spacing 200Mm				1						
8	5022010465-3	Right Front Gang Nvf-52(Left) Spacing 200Mm					1					
8	5022010471-8	Right Front Gang Nvf-56(Left) Spacing 200Mm						1				
8	5022010477-7	Right Front Gang Nvf-60(Left) Spacing 200Mm							1			
8	5022010483-1	Right Front Gang Nvf-64(Left) Spacing 200Mm								1		
8	5022010489-0	Right Front Gang Nvf-68(Left) Spacing 200Mm									1	
8	5022010495-5	Right Front Gang Nvf-72(Left) Spacing 200Mm										1
9	5138090001-0	Wrench For Hexagonal Nut 1.1/4" - 1" - 3/4" - 5/8"	2									
10	5022010450-5	Right Rear Gang Nvf-40(Left) Spacing 200Mm		1								
10	5022010454-8	Right Rear Gang Nvf-44(Left) Spacing 200Mm			1							
10	5022010458-0	Right Rear Gang Nvf-48(Left) Spacing 200Mm				1						
10	5022010464-5	Right Rear Gang Nvf-52(Left) Spacing 200Mm					1					
10	5022010470-0	Right Rear Gang Nvf-56(Left) Spacing 200Mm						1				
10	5022010476-9	Right Rear Gang Nvf-60(Left) Spacing 200Mm							1			
10	5022010482-3	Right Rear Gang Nvf-64(Left) Spacing 200Mm								1		
10	5022010488-2	Right Rear Gang Nvf-68(Left) Spacing 200Mm									1	
10	5022010494-7	Right Rear Gang Nvf-72(Left) Spacing 200Mm										1
11	5040020107-0	Hitch Transversal Bar	1	1	1	1	1	1				
11	5040020108-8	Hitch Transversal Bar							1	1	1	1
12	5558010497-4	Gangs Lock	2									
13	5232200003-0	Union Shaft Ø1.1/8" X 582Mm	2									
14	5120010041-0	Spool Of 027 X 057 X 75Mm	2									
15	5558010496-6	Lock for Transport	2									
16	6020310770-9	Hexagonal Nut 3/4" 10F Unc Gr5 Ch.1.7/32" Height 18,50Mm	2									
17	6020010414-8	Pressure Washer 3/4" Media Industry	1									
18	6020311096-3	Hexagonal Head Bolt 3/4" X 2.1/2" 10F Unc1A Gr5 Rp	1									

Item	Code	Product description	All	NVF 40 Discs	NVF 44 Discs	NVF 48 Discs	NVF 52 Discs	NVF 56 Discs	NVF 60 Discs	NVF 64 Discs	NVF 68 Discs	NVF 72 Discs
19	6020311098-0	Hexagonal Head Bolt 3/4" X 3.1/2" 10F Unc1A Gr5 Rp	1									
20	5024010192-8	Smooth Washer Ø30 X Ø52 X 4,75Mm(Galvanised)	4									
21	6020050108-2	Cotterpin 3/16" X 2"		2	2	2	2	2	2	2	2	2
22	5024010059-0	Smooth Washer Ø16,5 X Ø29 X 1,21Mm							2		2	2
23	6020390308-4	Lock Nma - Type "R" Ø4,5 X 80Mm		3	2	3	3	3	5	3	3	3
24	6020050114-7	Cotterpin 1/4" X 1.1/2"	4									
25	6020050122-8	Cotterpin 3/8" X 2.1/2"	6									
26	6020050116-3	Cotterpin 1/4" X 2"	2									
27	5040070014-9	Front Bar		1	1	1						
27	5040070015-7	Front Bar					1	1				
27	5040070012-2	Front Bar							1	1		
27	5040070016-5	Front Bar									1	1
28	5040070013-0	Union Bar 495Mm	1									
29	5572070328-8	Beam 70 X 70 X 750mm	1									
30	5558070066-6	Adjustment Lock Of 2" X 1" X 1360Mm	1									
31	5024010634-2	Smooth Washer Ø26,8 X Ø66,5 X 4,75Mm	1									
32	6020010420-2	Pressure Washer 1" Media Industry	3									
33	6020310778-4	Hexagonal Nut 1" 8F Unc Gr5 Ch.1.5/8" Height 25,00Mm	3									
34	6020310597-8	Pin Ø3/4" X 62mm	4									
35	6020310662-1	French Head Pin Ø1" X 125mm	2									
36	5432120090-0	French Head Pin Ø30,53 X 97Mm	2									
37	6020311080-7	Hexagonal Head Bolt 5/8" X 4" 11F Unc1A Gr5 Rp	2									
38	6020010412-1	Pressure Washer 5/8" Media Industry	2									
39	6020310760-1	Hexagonal Nut 5/8" 11F Unc Gr5 Ch.1.1/16" Height 15,00Mm		1	1	1	1	1	1	1		
40	6020130108-7	Grease Fitting 1/8"		5	5	5	5	7	5	5	5	5
40	6020130108-7	Grease Fitting 1/8"		17	17	17	23	23	23	23	27	27
41	5024010061-1	Smooth Washer Ø33,5 X Ø53,5 X 4,75Mm	2									
42	5024010130-8	Smooth Washer Ø39 X Ø66 X 4,75Mm(Galvanised)	5									
43	5024010007-7	Smooth Washer Ø20,3 X Ø46,5 X 4,75Mm	4									
44	6020311176-5	French Head Bolt 1/2" X 2" 12F W Gr2 Rp		24	28	32	32	36	40	44	44	48
44	6020311176-5	French Head Bolt 1/2" X 2" 12F W Gr2 Rp		40	44	48	52	56	60	64	68	72
45	5024010068-9	Smooth Washer Ø13,3 X Ø35,5 X 3,00Mm		24	28	32	32	36	40	44	44	48
45	5024010068-9	Smooth Washer Ø13,3 X Ø35,5 X 3,00Mm		40	44	48	52	56	60	64	68	72
46	6020010410-5	Pressure Washer 1/2" Media Industry		25	29	33	33	37	42	45	45	49
46	6020010410-5	Pressure Washer 1/2" Media Industry		40	44	48	52	56	60	64	68	72
47	6020310754-7	Hexagonal Nut 1/2" 12F W Gr5 Ch.7/8" Height 12,00Mm		24	28	32	32	36	40	44	44	48
47	6020310754-7	Hexagonal Nut 1/2" 12F W Gr5 Ch.7/8" Height 12,00Mm		40	44	48	52	56	60	64	68	72
48	5352030058-5	Discs Scraper		24	28	32	32	36	40	44	44	48
48	5352030058-5	Discs Scraper		40	44	48	52	56	60	64	68	72
49	5040010077-0	Left Rear Stabilizer Bar		1	1	1						
49	5040010078-8	Left Rear Stabilizer Bar					1	1				
49	5040010079-6	Left Rear Stabilizer Bar							1	1		
49	5040010080-0	Left Rear Stabilizer Bar									1	1
50	5432040003-4	Square Head Pin Ø37,5 X 190Mm	5									
51	5432060027-0	Pin Ø3/4" X 155Mm	1									
52	5432060023-8	Pin Ø1" X 210Mm	1									
53	6020311136-6	Hexagonal Head Bolt 1" X 5.1/2" 8F Unc1A Gr5 Rp	1									
54	6020311138-2	Hexagonal Head Bolt 1" X 6" 8F Unc1A Gr5 Rp	1									
55	6020311046-7	Hexagonal Head Bolt 1/2" X 3/4" 12F W Gr2 Rt							1	1	1	1
56	5192010046-9	Complete Chain De 05,5Mm 510Mm Cpl							1	1	1	1

• NVF (Without Wheels) Hydraulic Opening

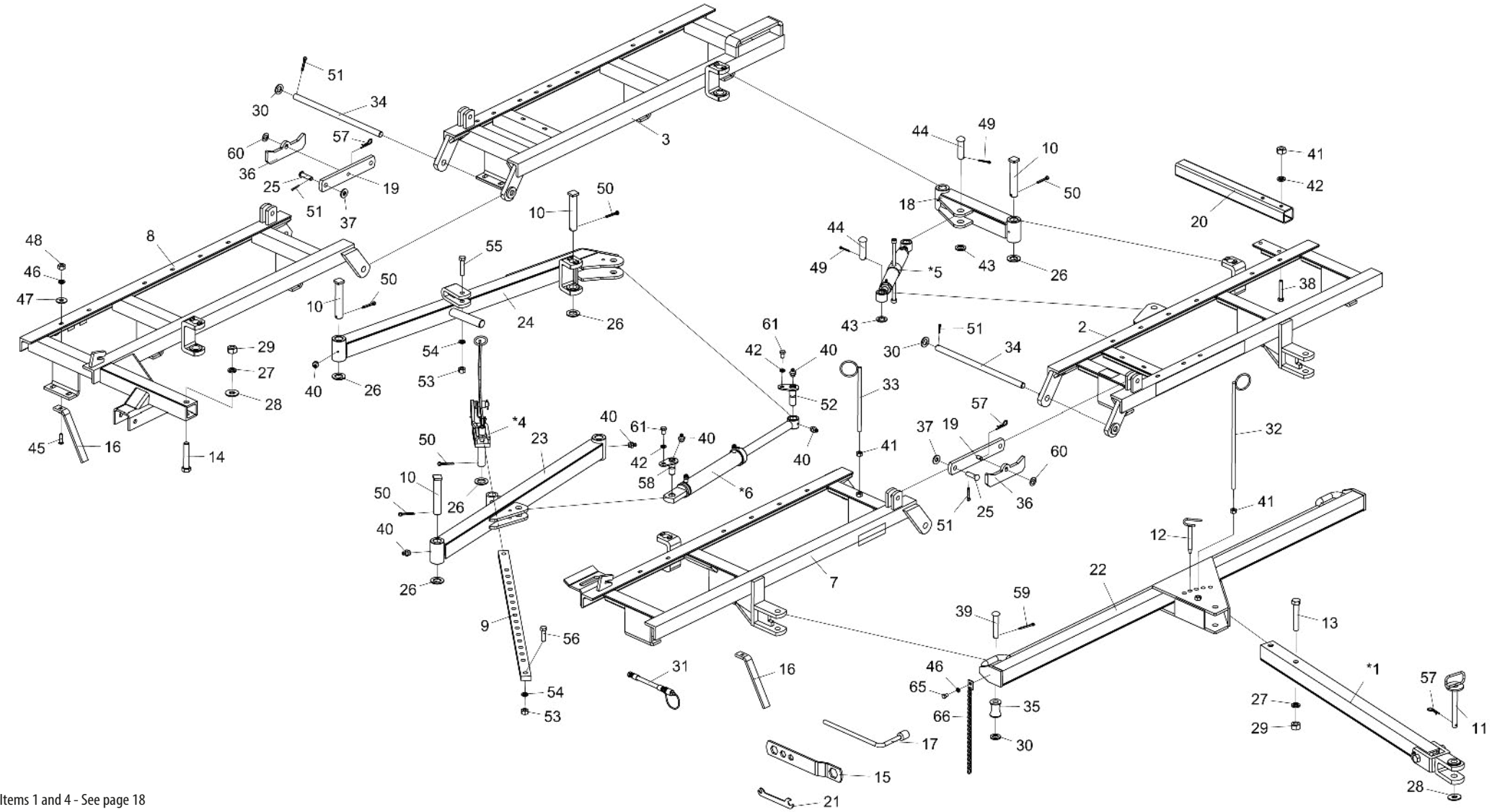

* Items 1 and 4 - See page 18

* Items 5 and 6 - See page 21

• Table NVF (Without Wheels) Hydraulic Opening

Item	Code	Product description	All	NVF 40 Discs	NVF 44 Discs	NVF 48 Discs	NVF 52 Discs	NVF 56 Discs	NVF 60 Discs	NVF 64 Discs	NVF 68 Discs	NVF 72 Discs
*1	5084030011-8	Complete Hitch Drawbar (Mechanic Opening)	1									
2	5022010451-3	Right Front Gang Nvf-40(Left) Spacing 200Mm		1								
2	5022010077-1	Right Front Gang Nvf-44(Left) Spacing 200Mm			1							
2	5022010073-9	Right Front Gang Nvf-48(Left) Spacing 200Mm				1						
2	5022010460-2	Right Front Gang Nvf-52(Left) Spacing 200Mm					1					
2	5022010466-1	Right Front Gang Nvf-56(Left) Spacing 200Mm						1				
2	5022010472-6	Right Front Gang Nvf-60(Left) Spacing 200Mm							1			
2	5022010478-5	Right Front Gang Nvf-64(Left) Spacing 200Mm								1		
2	5022010484-0	Right Front Gang Nvf-68(Left) Spacing 200Mm									1	
2	5022010490-4	Right Front Gang Nvf-72(Left) Spacing 200Mm										1
3	5022010082-8	Left Rear Gang Nvf-40(Left) Spacing 200Mm		1								
3	5022010078-0	Left Rear Gang Nvf-44(Left) Spacing 200Mm			1							
3	5022010074-7	Left Rear Gang Nvf-48(Left) Spacing 200Mm				1						
3	5022010462-9	Left Rear Gang Nvf-52(Left) Spacing 200Mm					1					
3	5022010468-8	Left Rear Gang Nvf-56(Left) Spacing 200Mm						1				
3	5022010474-2	Left Rear Gang Nvf-60(Left) Spacing 200Mm							1			
3	5022010480-7	Left Rear Gang Nvf-64(Left) Spacing 200Mm								1		
3	5022010486-6	Left Rear Gang Nvf-68(Left) Spacing 200Mm									1	
3	5022010492-0	Left Rear Gang Nvf-72(Left) Spacing 200Mm										1
*4	5468010014-7	Complete Lock Handle	1									
*5	5484010065-3	Complete Regulator	1									
*6	6020055721-5	Hydraulic Cylinder "O.D" Ø1.5/8" X Ø2.1/2" X 336Mm(Course) X 680Mm(Closed)	1									
7	5022010084-4	Right Front Gang Nvfp-40 Spacing 200Mm (Left)		1								
7	5022010455-6	Right Front Gang Nvf-44(Left) Spacing 200Mm			1							
7	5022010459-9	Right Front Gang Nvf-48(Left) Spacing 200Mm				1						
7	5022010465-3	Right Front Gang Nvf-52(Left) Spacing 200Mm					1					
7	5022010471-8	Right Front Gang Nvf-56(Left) Spacing 200Mm						1				
7	5022010477-7	Right Front Gang Nvf-60(Left) Spacing 200Mm							1			
7	5022010483-1	Right Front Gang Nvf-64(Left) Spacing 200Mm								1		
7	5022010489-0	Right Front Gang Nvf-68(Left) Spacing 200Mm									1	
7	5022010495-5	Right Front Gang Nvf-72(Left) Spacing 200Mm										1
8	5022010450-5	Right Rear Gang Nvf-40(Left) Spacing 200Mm		1								
8	5022010454-8	Right Rear Gang Nvf-44(Left) Spacing 200Mm			1							
8	5022010458-0	Right Rear Gang Nvf-48(Left) Spacing 200Mm				1						

Item	Code	Product description	All	NVF 40 Discs	NVF 44 Discs	NVF 48 Discs	NVF 52 Discs	NVF 56 Discs	NVF 60 Discs	NVF 64 Discs	NVF 68 Discs	NVF 72 Discs
8	5022010464-5	Right Rear Gang Nvf-52(Left) Spacing 200Mm					1					
8	5022010470-0	Right Rear Gang Nvf-56(Left) Spacing 200Mm						1				
8	5022010476-9	Right Rear Gang Nvf-60(Left) Spacing 200Mm							1			
8	5022010482-3	Right Rear Gang Nvf-64(Left) Spacing 200Mm								1		
8	5022010488-2	Right Rear Gang Nvf-68(Left) Spacing 200Mm									1	
8	5022010494-7	Right Rear Gang Nvf-72(Left) Spacing 200Mm										1
9	5558070066-6	Adjustment Lock Of 2" X 1" X 1360Mm	1									
10	5432040003-4	Square Head Pin Ø37,5 X 190Mm	5									
11	5432060023-8	Pin Ø1" X 210Mm	1									
12	5432060027-0	Pin Ø3/4" X 155Mm	1									
13	6020311138-2	Hexagonal Head Bolt 1" X 6" 8F Unc1A Gr5 Rp	1									
14	6020311136-6	Hexagonal Head Bolt 1" X 5.1/2" 8F Unc1A Gr5 Rp	1									
15	5138090001-0	Wrench For Hexagonal Nut 1.1/4" - 1" - 3/4" - 5/8"	2									
16	5352030058-5	Discs Scraper		24	28	32	32	36	40	44	44	48
16	5352030058-5	Discs Scraper		40	44	48	52	56	60	64	68	72
17	6020058710-6	Wrench For Hexagonal Nut 5/8"	1									
18	5040070013-0	Union Bar 495Mm	1									
19	5558010497-4	Gangs Lock	2									
20	5572070328-8	Beam 70 X 70 X 750mm	1									
21	5138020001-9	Wrench For Hexagonal Nut 3/8" - 1/2"	1									
22	5040020107-0	Hitch Transversal Bar		1	1	1	1	1				
22	5040020108-8	Hitch Transversal Bar							1	1	1	1
23	5040070014-9	Front Bar		1	1	1						
23	5040070015-7	Front Bar					1	1				
23	5040070012-2	Front Bar							1	1		
23	5040070016-5	Front Bar									1	1
24	5040010077-0	Left Rear Stabilizer Bar		1	1	1						
24	5040010078-8	Left Rear Stabilizer Bar					1	1				
24	5040010079-6	Left Rear Stabilizer Bar							1	1		
24	5040010080-0	Left Rear Stabilizer Bar									1	1
25	6020310597-8	Pin Ø3/4" X 62mm	4									
26	5024010130-8	Smooth Washer Ø39 X Ø66 X 4,75Mm(Galvanised)	5									
27	6020010420-2	Pressure Washer 1" Media Industry	3									
28	5024010634-2	Smooth Washer Ø26,8 X Ø66,5 X 4,75Mm	1									

BALDAN

• Table NVF (Without Wheels) Hydraulic Opening

Item	Code	Product description	All	NVF 40 Discs	NVF 44 Discs	NVF 48 Discs	NVF 52 Discs	NVF 56 Discs	NVF 60 Discs	NVF 64 Discs	NVF 68 Discs	NVF 72 Discs
29	6020310778-4	Hexagonal Nut 1" 8F Unc Gr5 Ch.1.5/8" Height 25,00Mm	3									
30	5024010192-8	Smooth Washer Ø30 X Ø52 X 4,75Mm(Galvanised)	4									
31	5372011030-6	Hose Ø3/8" X 4500Mm W/1Trg And 1Trf W/Male Quickly Coupling		2	2	2	2	2				
31	5372011026-8	Hose Ø3/8" X 5500Mm W/1Trg And 1Trf W/Male Quickly Coupling							2	2	2	2
32	5530060020-3	Hoses Support	1									
33	5530060001-7	Small Support Of Hoses	1									
34	5232200003-0	Union Shaft Ø1.1/8" X 582Mm	2									
35	5120010041-0	Spool Of 027 X 057 X 75Mm	2									
36	5558010496-6	Lock for Transport	2									
37	5024010007-7	Smooth Washer Ø20,3 X Ø46,5 X 4,75Mm	4									
38	6020311080-7	Hexagonal Head Bolt 5/8" X 4" 11F Unc1A Gr5 Rp	2									
39	6020310662-1	French Head Pin Ø1" X 125mm	2									
40	6020130108-7	Grease Fitting 1/8"	9									
40	6020130108-7	Grease Fitting 1/8"		19	21	21	25	25	25	25	29	9
41	6020310760-1	Hexagonal Nut 5/8" 11F Unc Gr5 Ch.1.1/16" Height 15,00Mm		4	4	4	4	2	4	4	4	4
42	6020010412-1	Pressure Washer 5/8" Media Industry	4									
43	5024010061-1	Smooth Washer Ø33,5 X Ø53,5 X 4,75Mm	2									
44	5432120090-0	French Head Pin Ø30,53 X 97Mm	2									
45	6020311176-5	French Head Bolt 1/2" X 2" 12F W Gr2 Rp		24	28	32	32	36	40	44	44	48
45	6020311176-5	French Head Bolt 1/2" X 2" 12F W Gr2 Rp		40	44	48	52	56	60	64	68	72
46	6020010410-5	Pressure Washer 1/2" Media Industry		25	29	33	33	37	42	46	46	50
46	6020010410-5	Pressure Washer 1/2" Media Industry		40	44	48	52	56	60	64	68	72
47	5024010068-9	Smooth Washer Ø13,3 X Ø35,5 X 3,00Mm		24	28	32	32	36	40	44	44	48
47	5024010068-9	Smooth Washer Ø13,3 X Ø35,5 X 3,00Mm		40	44	48	52	56	60	64	68	72
48	6020310754-7	Hexagonal Nut 1/2" 12F W Gr5 Ch.7/8" Height 12,00Mm		24	28	32	32	36	40	44	44	48
48	6020310754-7	Hexagonal Nut 1/2" 12F W Gr5 Ch.7/8" Height 12,00Mm		40	44	48	52	56	60	64	68	72
49	6020050116-3	Cotterpin 1/4" X 2"	2									
50	6020050122-8	Cotterpin 3/8" X 2.1/2"	6									
51	6020050114-7	Cotterpin 1/4" X 1.1/2"	4									
52	5432080008-3	Lock Pin Ø31 X 95Mm Without Grease Fitting(Hydraulic Opening)	1									
53	6020310770-9	Hexagonal Nut 3/4" 10F Unc Gr5 Ch.1.7/32" Height 18,50Mm	2									
54	6020010414-8	Pressure Washer 3/4" Media Industry	1									
55	6020311098-0	Hexagonal Head Bolt 3/4" X 3.1/2" 10F Unc1A Gr5 Rp	1									

Item	Code	Product description	All	NVF 40 Discs	NVF 44 Discs	NVF 48 Discs	NVF 52 Discs	NVF 56 Discs	NVF 60 Discs	NVF 64 Discs	NVF 68 Discs	NVF 72 Discs
56	6020311096-3	Hexagonal Head Bolt 3/4" X 2.1/2" 10F Unc1A Gr5 Rp		1	1	1	1	1				
56	6020311094-7	Hexagonal Head Bolt 3/4" X 2.1/4" 10F Unc1A Gr5 Rt							1	1	1	1
57	6020390308-4	Lock Nma - Type "R" Ø4,5 X 80Mm		3	3	3	3	3	5	9	5	5
58	5432080013-0	Lock Pin Ø31 X 70Mm Without Grease Fitting(Hydraulic Opening)	1									
59	6020050108-2	Cotterpin 3/16" X 2"	2									
60	5024010059-0	Smooth Washer Ø16,5 X Ø29 X 1,21Mm							2	2	2	2
61	6020310183-2	Hexagonal Head Bolt 5/8" X 1" 11F Unc1A Gr2 Rt	2									
65	6020311046-7	Hexagonal Head Bolt 1/2" X 3/4" 12F W Gr2 Rt							1	1	1	1
66	5192010046-9	Complete Chain De 05,5Mm 510Mm Cpl							1	1	1	1

• NVF-P (With Wheels) Mechanical Opening

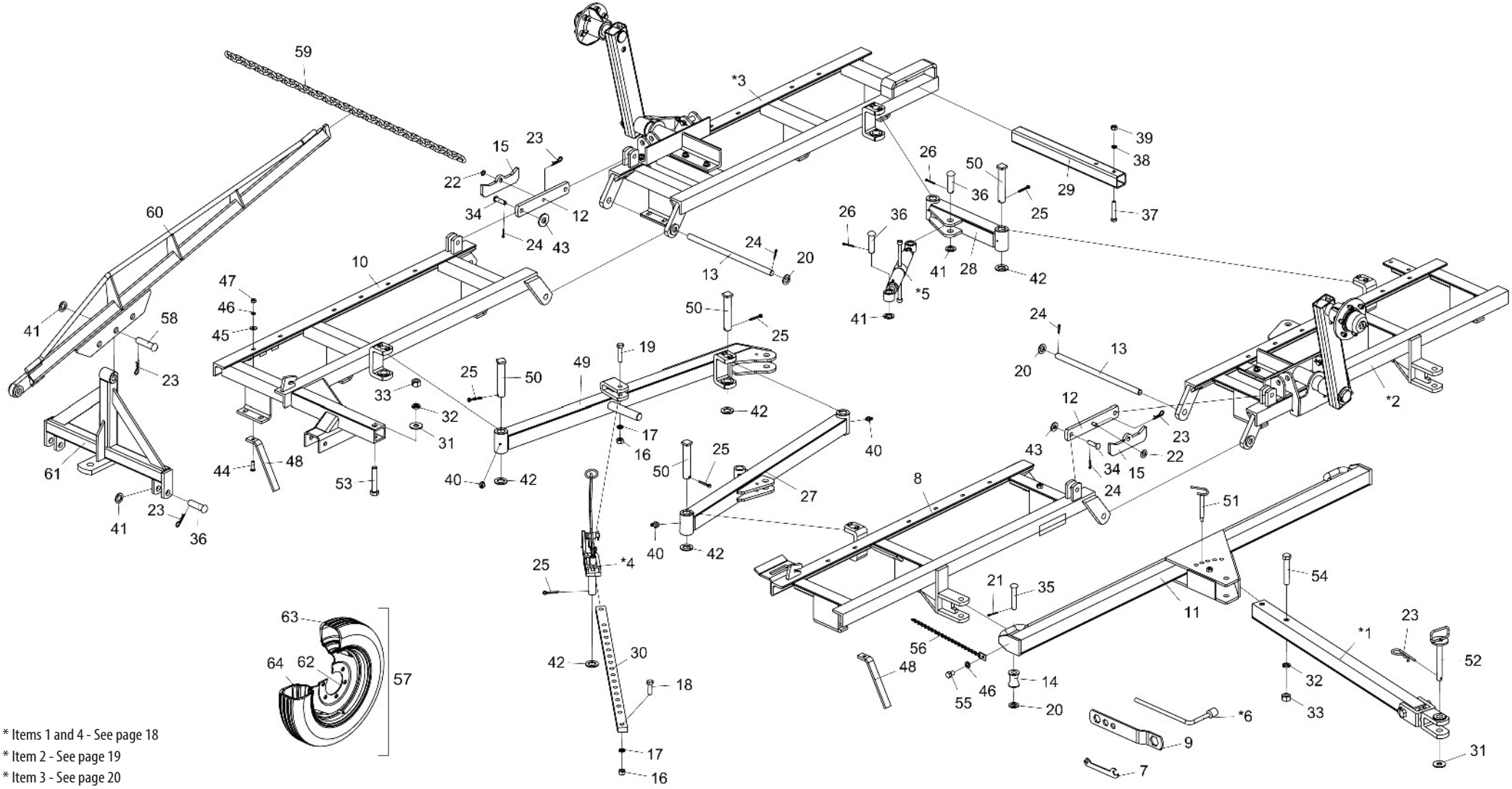

* Items 1 and 4 - See page 18
* Item 2 - See page 19
* Item 3 - See page 20
* Item 5 - See page 21

BALDAN

• Table NVF-P (With Wheels) Mechanical Opening

Item	Code	Product description	All	NVF 40 Discs	NVF 44 Discs	NVF 48 Discs	NVF 52 Discs	NVF 56 Discs	NVF 60 Discs	NVF 64 Discs	NVF 68 Discs	NVF 72 Discs
*1	5084030011-8	Complete Hitch Drawbar (Mechanic Opening)	1									
*2	5022010448-3	Right Front Gang Nvf-40(Left) Spacing 200mm With Wheel		1								
*2	5022010452-1	Right Front Gang Nvf-44(Left) Spacing 200mm With Wheel			1							
*2	5022010456-4	Right Front Gang Nvf-48(Left) Spacing 200mm With Wheel				1						
*2	5022010461-0	Right Front Gang Nvf-52(Left) Spacing 200mm With Wheel					1					
*2	5022010467-0	Right Front Gang Nvf-56(Left) Spacing 200mm With Wheel						1				
*2	5022010473-4	Right Front Gang Nvf-60(Left) Spacing 200mm With Wheel							1			
*2	5022010479-3	Right Front Gang Nvf-64(Left) Spacing 200mm With Wheel								1		
*2	5022010485-8	Right Front Gang Nvf-68(Left) Spacing 200mm With Wheel									1	
*2	5022010491-2	Right Front Gang Nvf-72(Left) Spacing 200mm With Wheel										1
*3	5022010449-1	Left Rear Gang Nvf-40(Left) Spacing 200mm With Wheel		1								
*3	5022010453-0	Left Rear Gang Nvf-44(Left) Spacing 200mm With Wheel			1							
*3	5022010457-2	Left Rear Gang Nvf-48(Left) Spacing 200mm With Wheel				1						
*3	5022010463-7	Left Rear Gang Nvf-52(Left) Spacing 200mm With Wheel					1					
*3	5022010469-6	Left Rear Gang Nvf-56(Left) Spacing 200mm With Wheel						1				
*3	5022010475-0	Left Rear Gang Nvf-60(Left) Spacing 200mm With Wheel							1			
*3	5022010481-5	Left Rear Gang Nvf-64(Left) Spacing 200mm With Wheel								1		
*3	5022010487-4	Left Rear Gang Nvf-68(Left) Spacing 200mm With Wheel									1	
*3	5022010493-9	Left Rear Gang Nvf-72(Left) Spacing 200mm With Wheel										1
*4	5468010014-7	Complete Lock Handle	1									
*5	5484010065-3	Complete Regulator	1									
6	6020058710-6	Wrench For Hexagonal Nut 5/8"	1									
7	5138020001-9	Wrench For Hexagonal Nut 3/8" - 1/2"	1									
8	5022010084-4	Right Front Gang Nvfp-40 Spacing 200mm (Left)		1								
8	5022010455-6	Right Front Gang Nvf-44(Left) Spacing 200mm			1							
8	5022010459-9	Right Front Gang Nvf-48(Left) Spacing 200mm				1						
8	5022010465-3	Right Front Gang Nvf-52(Left) Spacing 200mm					1					
8	5022010471-8	Right Front Gang Nvf-56(Left) Spacing 200mm						1				
8	5022010477-7	Right Front Gang Nvf-60(Left) Spacing 200mm							1			
8	5022010483-1	Right Front Gang Nvf-64(Left) Spacing 200mm								1		
8	5022010489-0	Right Front Gang Nvf-68(Left) Spacing 200mm									1	
8	5022010495-5	Right Front Gang Nvf-72(Left) Spacing 200mm										1
9	5138090001-0	Wrench For Hexagonal Nut 1.1/4" - 1" - 3/4" - 5/8"	2									
10	5022010450-5	Right Rear Gang Nvf-40(Left) Spacing 200mm		1								
10	5022010454-8	Right Rear Gang Nvf-44(Left) Spacing 200mm			1							
10	5022010458-0	Right Rear Gang Nvf-48(Left) Spacing 200mm				1						
10	5022010464-5	Right Rear Gang Nvf-52(Left) Spacing 200mm					1					
10	5022010470-0	Right Rear Gang Nvf-56(Left) Spacing 200mm						1				
10	5022010476-9	Right Rear Gang Nvf-60(Left) Spacing 200mm							1			
10	5022010482-3	Right Rear Gang Nvf-64(Left) Spacing 200mm								1		
10	5022010488-2	Right Rear Gang Nvf-68(Left) Spacing 200mm									1	
10	5022010494-7	Right Rear Gang Nvf-72(Left) Spacing 200mm										1

Item	Code	Product description	All	NVF 40 Discs	NVF 44 Discs	NVF 48 Discs	NVF 52 Discs	NVF 56 Discs	NVF 60 Discs	NVF 64 Discs	NVF 68 Discs	NVF 72 Discs
11	5040020107-0	Hitch Transversal Bar	1	1	1	1	1	1				
11	5040020108-8	Hitch Transversal Bar							1	1	1	1
12	5558010497-4	Gangs Lock	2									
13	5232200003-0	Union Shaft Ø1.1/8" X 582mm	2									
14	5120010041-0	Spool Of 027 X 057 X 75mm	2									
15	5558010496-6	Lock for Transport	2									
16	6020310770-9	Hexagonal Nut 3/4" 10F Unc Gr5 Ch.1.7/32" Height 18,50mm	2									
17	6020010414-8	Pressure Washer 3/4" Media Industry	1									
18	6020311096-3	Hexagonal Head Bolt 3/4" X 2.1/2" 10F Unc1A Gr5 Rp		1	1	1	1	1				
18	6020311094-7	Hexagonal Head Bolt 3/4" X 2.1/4" 10F Unc1A Gr5 Rt							1	1	1	1
19	6020311098-0	Hexagonal Head Bolt 3/4" X 3.1/2" 10F Unc1A Gr5 Rp	1									
20	5024010192-8	Smooth Washer Ø30 X Ø52 X 4,75mm(Galvanised)	4									
21	6020050108-2	Cotterpin 3/16" X 2"	2									
22	5024010059-0	Smooth Washer Ø16,5 X Ø29 X 1,21mm							2	2	2	2
23	6020390308-4	Lock Nma - Type "R" Ø4,5 X 80mm		3	3	3	3	3	5	10	5	5
24	6020050114-7	Cotterpin 1/4" X 1.1/2"		4	4	4	4	4	4	5	4	4
25	6020050122-8	Cotterpin 3/8" X 2.1/2"	6									
26	6020050116-3	Cotterpin 1/4" X 2"	2									
27	5040070014-9	Front Bar		1	1	1						
27	5040070015-7	Front Bar					1	1				
27	5040070012-2	Front Bar							1	1		
27	5040070016-5	Front Bar									1	1
28	5040070013-0	Union Bar 495mm	1									
29	5572070328-8	Beam 70 X 70 X 750mm	1									
30	5558070066-6	Adjustment Lock Of 2" X 1" X 1360mm	1									
31	5024010634-2	Smooth Washer Ø26,8 X Ø66,5 X 4,75mm	1									
32	6020010420-2	Pressure Washer 1" Media Industry	3									
33	6020310778-4	Hexagonal Nut 1" 8F Unc Gr5 Ch.1.5/8" Height 25,00mm	3									
34	6020310597-8	Pin Ø3/4" X 62mm	4									
35	6020310662-1	French Head Pin Ø1" X 125mm	2									
36	5432120090-0	French Head Pin Ø30,53 X 97mm	2									
37	6020311087-4	Hexagonal Head Bolt 5/8" X 4" 11F Unc1A Gr5 Rp	2									
38	6020010412-1	Pressure Washer 5/8" Media Industry	2									
39	6020310760-1	Hexagonal Nut 5/8" 11F Unc Gr5 Ch.1.1/16" Height 15,00mm		1	1	1	1	1	1	1		
40	6020130108-7	Grease Fitting 1/8"		5	5	5	6	5	5	7	5	5
40	6020130108-7	Grease Fitting 1/8"		17	17	17	23	23	23	23	27	27
41	5024010061-1	Smooth Washer Ø33,5 X Ø53,5 X 4,75mm	2									
42	5024010130-8	Smooth Washer Ø39 X Ø66 X 4,75mm(Galvanised)	5									
43	5024010007-7	Smooth Washer Ø20,3 X Ø46,5 X 4,75mm		4	4	4	4	4	4	3	4	4
44	6020311176-5	French Head Bolt 1/2" X 2" 12F W Gr2 Rp		24	28	32	32	36	40	44	44	48
44	6020311176-5	French Head Bolt 1/2" X 2" 12F W Gr2 Rp		40	44	48	52	56	60	64	68	72
45	5024010068-9	Smooth Washer Ø13,3 X Ø35,5 X 3,00mm		24	28	32	32	36	40	44	44	48

• Table NVF-P (With Wheels) Mechanical Opening

Item	Code	Product description	All	NVF 40 Discs	NVF 44 Discs	NVF 48 Discs	NVF 52 Discs	NVF 56 Discs	NVF 60 Discs	NVF 64 Discs	NVF 68 Discs	NVF 72 Discs
45	5024010068-9	Smooth Washer Ø13,3 X Ø35,5 X 3,00mm		40	44	48	52	56	60	64	68	72
46	6020010410-5	Pressure Washer 1/2" Media Industry		25	29	33	33	37	42	46	46	50
46	6020010410-5	Pressure Washer 1/2" Media Industry		40	44	48	52	56	60	64	68	72
47	6020310754-7	Hexagonal Nut 1/2" 12F W Gr5 Ch.7/8" Height 12,00mm		24	28	32	32	36	40	44	44	48
47	6020310754-7	Hexagonal Nut 1/2" 12F W Gr5 Ch.7/8" Height 12,00mm		40	44	48	52	56	60	64	68	72
48	5352030058-5	Discs Scraper		24	28	32	32	36	40	44	44	48
48	5352030058-5	Discs Scraper		40	44	48	52	56	60	64	68	72
49	5040010077-0	Left Rear Stabilizer Bar		1	1	1						
49	5040010078-8	Left Rear Stabilizer Bar					1	1				
49	5040010079-6	Left Rear Stabilizer Bar							1	1		
49	5040010080-0	Left Rear Stabilizer Bar									1	1
50	5432040003-4	Square Head Pin Ø37,5 X 190mm	5									
51	5432060027-0	Pin Ø3/4" X 155mm	1									
52	5432060023-8	Pin Ø1" X 210mm	1									
53	6020311136-6	Hexagonal Head Bolt 1" X 5.1/2" 8F Unc1A Gr5 Rp	1									
54	6020311138-2	Hexagonal Head Bolt 1" X 6" 8F Unc1A Gr5 Rp	1									
55	6020311046-7	Hexagonal Head Bolt 1/2" X 3/4" 12F W Gr2 Rt							1	1	1	1
56	5192010046-9	Complete Chain De 05,5mm 510mm Cpl							1	1	1	1
57	5498100003-2	Complete Wheel 600 X 16		2								
57	5498010014-9	Complete Wheel 650 X 16			2	2	2	2	2	2	2	2
58	5432120029-2	French Head Pin Ø30,53 X 113mm	1									
59	5192020034-0	Chain Of 1723mm(35 Elos)	1									
60	5040100014-0	Lifting Bar Of Gang	1									
61	5084040111-9	Hitch Drawbar For Transport	1									
62	6020350400-7	Rim 4,50X16 F16.388 43/03 (Harrow)	2									
63	6020310400-9	Tyre 600X16X16Ls.		2								
63	6020310376-2	Tyre 650X16X08Ls.			2	2	2	2	2	2	2	2
64	6020050350-6	Inner Tube 600X16	2									

• NVF-P (With Wheels) Hydraulic Opening

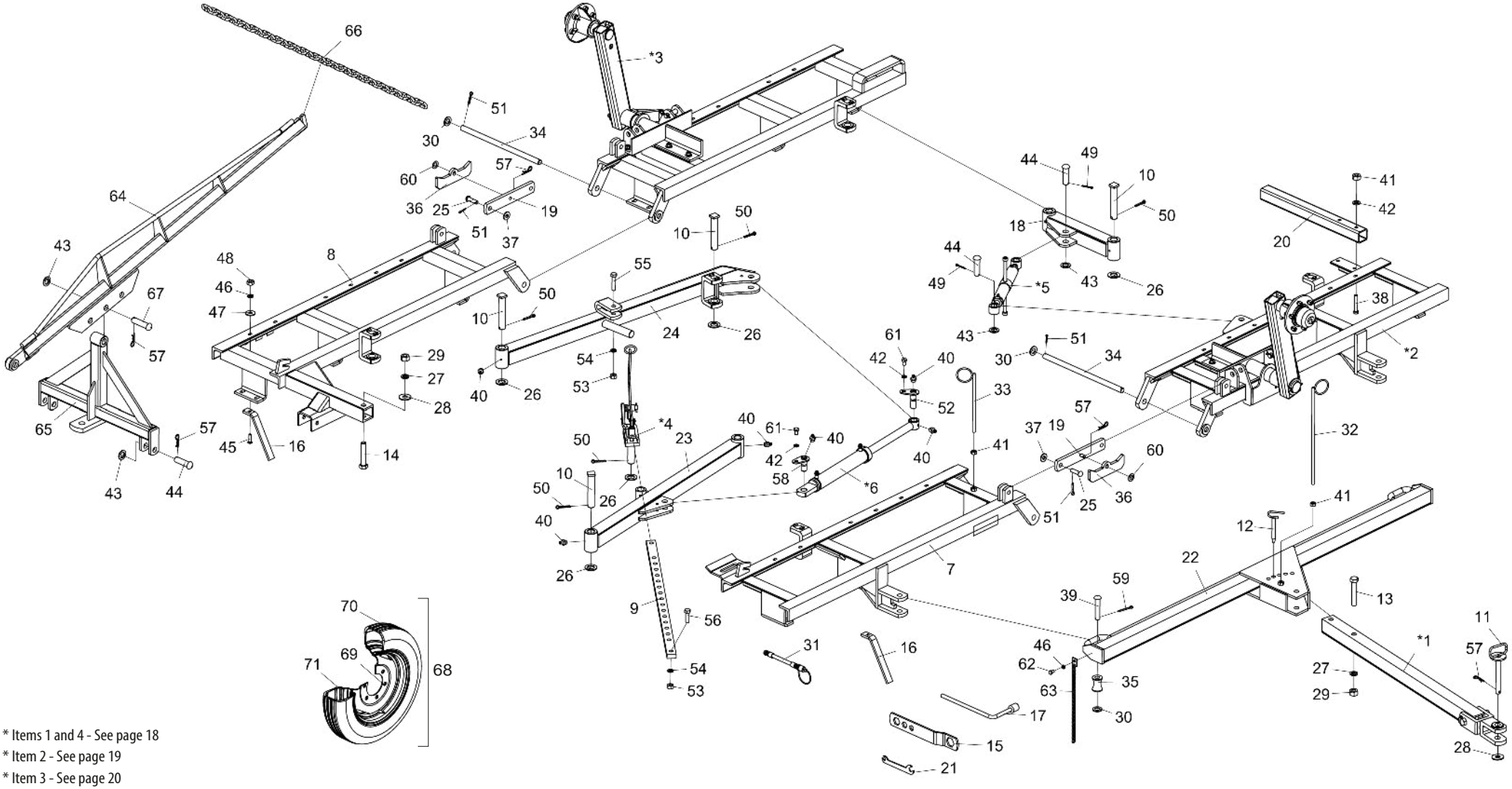

* Items 1 and 4 - See page 18
* Item 2 - See page 19
* Item 3 - See page 20
* Items 5 and 6 - See page 21

• Table NVF-P (With Wheels) Hydraulic Opening

Item	Code	Product description	All	NVF 40 Discs	NVF 44 Discs	NVF 48 Discs	NVF 52 Discs	NVF 56 Discs	NVF 60 Discs	NVF 64 Discs	NVF 68 Discs	NVF 72 Discs
*1	5084030011-8	Complete Hitch Drawbar (Mechanic Opening)	1									
*2	5022010448-3	Right Front Gang Nvf-40(Left) Spacing 200mm With Wheel		1								
*2	5022010452-1	Right Front Gang Nvf-44(Left) Spacing 200mm With Wheel			1							
*2	5022010456-4	Right Front Gang Nvf-48(Left) Spacing 200mm With Wheel				1						
*2	5022010461-0	Right Front Gang Nvf-52(Left) Spacing 200mm With Wheel					1					
*2	5022010467-0	Right Front Gang Nvf-56(Left) Spacing 200mm With Wheel						1				
*2	5022010473-4	Right Front Gang Nvf-60(Left) Spacing 200mm With Wheel							1			
*2	5022010479-3	Right Front Gang Nvf-64(Left) Spacing 200mm With Wheel								1		
*2	5022010485-8	Right Front Gang Nvf-68(Left) Spacing 200mm With Wheel									1	
*2	5022010491-2	Right Front Gang Nvf-72(Left) Spacing 200mm With Wheel										1
*3	5022010449-1	Left Rear Gang Nvf-40(Left) Spacing 200mm With Wheel		1								
*3	5022010453-0	Left Rear Gang Nvf-44(Left) Spacing 200mm With Wheel			1							
*3	5022010457-2	Left Rear Gang Nvf-48(Left) Spacing 200mm With Wheel				1						
*3	5022010463-7	Left Rear Gang Nvf-52(Left) Spacing 200mm With Wheel					1					
*3	5022010469-6	Left Rear Gang Nvf-56(Left) Spacing 200mm With Wheel						1				
*3	5022010475-0	Left Rear Gang Nvf-60(Left) Spacing 200mm With Wheel							1			
*3	5022010481-5	Left Rear Gang Nvf-64(Left) Spacing 200mm With Wheel								1		
*3	5022010487-4	Left Rear Gang Nvf-68(Left) Spacing 200mm With Wheel									1	
*3	5022010493-9	Left Rear Gang Nvf-72(Left) Spacing 200mm With Wheel										1
*4	5468010014-7	Complete Lock Handle	1									
*5	5484010065-3	Complete Regulator	1									
*6	6020055721-5	Hydr. Cylinder Ø1.5/8" X Ø2.1/2 X 336mm(Course) X 680mm(Closed)	1									
7	5022010084-4	Right Front Gang Nvfp-40 Spacing 200mm (Left)		1								
7	5022010455-6	Right Front Gang Nvf-44(Left) Spacing 200mm			1							
7	5022010459-9	Right Front Gang Nvf-48(Left) Spacing 200mm				1						
7	5022010465-3	Right Front Gang Nvf-52(Left) Spacing 200mm					1					
7	5022010471-8	Right Front Gang Nvf-56(Left) Spacing 200mm						1				
7	5022010477-7	Right Front Gang Nvf-60(Left) Spacing 200mm							1			
7	5022010483-1	Right Front Gang Nvf-64(Left) Spacing 200mm								1		
7	5022010489-0	Right Front Gang Nvf-68(Left) Spacing 200mm									1	
7	5022010495-5	Right Front Gang Nvf-72(Left) Spacing 200mm										1
8	5022010450-5	Right Rear Gang Nvf-40(Left) Spacing 200mm		1								
8	5022010454-8	Right Rear Gang Nvf-44(Left) Spacing 200mm			1							
8	5022010458-0	Right Rear Gang Nvf-48(Left) Spacing 200mm				1						
8	5022010464-5	Right Rear Gang Nvf-52(Left) Spacing 200mm					1					
8	5022010470-0	Right Rear Gang Nvf-56(Left) Spacing 200mm						1				
8	5022010476-9	Right Rear Gang Nvf-60(Left) Spacing 200mm							1			
8	5022010482-3	Right Rear Gang Nvf-64(Left) Spacing 200mm								1		
8	5022010488-2	Right Rear Gang Nvf-68(Left) Spacing 200mm									1	
8	5022010494-7	Right Rear Gang Nvf-72(Left) Spacing 200mm										1
9	5558070066-6	Adjustment Lock Of 2" X 1" X 1360mm	1									
10	5432040003-4	Square Head Pin Ø37,5 X 190mm	5									

Item	Code	Product description	All	NVF 40 Discs	NVF 44 Discs	NVF 48 Discs	NVF 52 Discs	NVF 56 Discs	NVF 60 Discs	NVF 64 Discs	NVF 68 Discs	NVF 72 Discs
11	5432060023-8	Pin Ø1" X 210mm	1									
12	5432060027-0	Pin Ø3/4" X 155mm	1									
13	6020311138-2	Hexagonal Head Bolt 1" X 6" 8F Unc1A Gr5 Rp	1									
14	6020311136-6	Hexagonal Head Bolt 1" X 5.1/2" 8F Unc1A Gr5 Rp	1									
15	5138090001-0	Wrench For Hexagonal Nut 1.1/4" - 1" - 3/4" - 5/8"	2									
16	5352030058-5	Discs Scraper		24	28	32	32	36	40	44	44	48
16	5352030058-5	Discs Scraper		40	44	48	52	56	60	64	68	72
17	6020058710-6	Wrench For Hexagonal Nut 5/8"	1									
18	5040070013-0	Union Bar 495mm	1									
19	5558010497-4	Gangs Lock	2									
20	5572070328-8	Beam 70 X 70 X 750mm	1									
21	5138020001-9	Wrench For Hexagonal Nut 3/8" - 1/2"	1									
22	5040020107-0	Hitch Transversal Bar		1	1	1	1	1				
22	5040020108-8	Hitch Transversal Bar							1	1	1	1
23	5040070014-9	Front Bar		1	1	1						
23	5040070015-7	Front Bar					1	1				
23	5040070012-2	Front Bar							1	1		
23	5040070016-5	Front Bar									1	1
24	5040010077-0	Left Rear Stabilizer Bar		1	1	1						
24	5040010078-8	Left Rear Stabilizer Bar					1	1				
24	5040010079-6	Left Rear Stabilizer Bar							1	1		
24	5040010080-0	Left Rear Stabilizer Bar									1	1
25	6020310597-8	Pin Ø3/4" X 62mm	4									
26	5024010130-8	Smooth Washer Ø39 X Ø66 X 4,75mm(Galvanised)	5									
27	6020010420-2	Pressure Washer 1" Media Industry	3									
28	5024010634-2	Smooth Washer Ø26,8 X Ø66,5 X 4,75mm	1									
29	6020310778-4	Hexagonal Nut 1" 8F Unc Gr5 Ch.1.5/8" Height 25,00mm	3									
30	5024010192-8	Smooth Washer Ø30 X Ø52 X 4,75mm(Galvanised)	4									
31	5372011030-6	Hose Ø3/8" X 4500mm W/1Trg And 1Trf W/Male Quickly Coupling		2	2	2	2	2				
31	5372011026-8	Hose Ø3/8" X 5500mm W/1Trg And 1Trf W/Male Quickly Coupling							2	2	2	2
32	5530060020-3	Hoses Support	1									
33	5530060001-7	Small Support Of Hoses	1									
34	5232200003-0	Union Shaft Ø1.1/8" X 582mm	2									
35	5120010041-0	Spool Of 027 X 057 X 75mm	2									
36	5558010496-6	Lock for Transport	2									
37	5024010007-7	Smooth Washer Ø20,3 X Ø46,5 X 4,75mm	4									
38	6020311087-4	Hexagonal Head Bolt 5/8" X 4" 11F Unc1A Gr5 Rp	2									
39	6020310662-1	French Head Pin Ø1" X 125mm	2									
40	6020130108-7	Grease Fitting 1/8"		10	9	10	10	10	10	9	9	9
40	6020130108-7	Grease Fitting 1/8"		19	19	21	25	25	25	25	29	29
41	6020310760-1	Hexagonal Nut 5/8" 11F Unc Gr5 Ch.1.1/16" Height 15,00mm		3	4	5	3	4	6	4	6	4
41	6020310760-1	Hexagonal Nut 5/8" 11F Unc Gr5 Ch.1.1/16" Height 15,00mm		4	3	3	3	3	4	3	4	4

BALDAN

• Table NVF-P (With Wheels) Hydraulic Opening

Item	Code	Product description	All	NVF 40 Discs	NVF 44 Discs	NVF 48 Discs	NVF 52 Discs	NVF 56 Discs	NVF 60 Discs	NVF 64 Discs	NVF 68 Discs	NVF 72 Discs
42	6020010412-1	Pressure Washer 5/8" Media Industry	4									
43	5024010061-1	Smooth Washer Ø33,5 X Ø53,5 X 4,75mm	2									
44	5432120090-0	French Head Pin Ø30,53 X 97mm		2	2	2	2	2	2	2	2	3
45	6020311176-5	French Head Bolt 1/2" X 2" 12F W Gr2 Rp		24	28	32	32	36	40	44	44	48
45	6020311176-5	French Head Bolt 1/2" X 2" 12F W Gr2 Rp		40	44	48	52	56	60	64	68	72
46	6020010410-5	Pressure Washer 1/2" Media Industry		24	28	32	32	36	41	45	45	48
46	6020010410-5	Pressure Washer 1/2" Media Industry		40	44	48	52	56	60	64	68	72
47	5024010068-9	Smooth Washer Ø13,3 X Ø35,5 X 3,00mm		24	28	32	32	36	40	44	44	48
47	5024010068-9	Smooth Washer Ø13,3 X Ø35,5 X 3,00mm		40	44	48	52	56	60	64	68	72
48	6020310754-7	Hexagonal Nut 1/2" 12F W Gr5 Ch.7/8" Height 12,00mm		24	28	32	32	36	40	44	44	48
48	6020310754-7	Hexagonal Nut 1/2" 12F W Gr5 Ch.7/8" Height 12,00mm		40	44	48	52	56	60	64	68	72
49	6020050116-3	Cotterpin 1/4" X 2"	2									
50	6020050122-8	Cotterpin 3/8" X 2.1/2"	6									
51	6020050114-7	Cotterpin 1/4" X 1.1/2"	4									
52	5432080008-3	Lock Pin Ø31 X 95mm Without Grease Fitting(Hydraulic Opening)	1									
53	6020310770-9	Hexagonal Nut 3/4" 10F Unc Gr5 Ch.1.7/32" Height 18,50mm	2									
54	6020010414-8	Pressure Washer 3/4" Media Industry	1									
55	6020311098-0	Hexagonal Head Bolt 3/4" X 3.1/2" 10F Unc1A Gr5 Rp	1									
56	6020311096-3	Hexagonal Head Bolt 3/4" X 2.1/2" 10F Unc1A Gr5 Rp		1	1	1	1	1				
56	6020311094-7	Hexagonal Head Bolt 3/4" X 2.1/4" 10F Unc1A Gr5 Rt							1	1	1	1
57	6020390308-4	Lock Nma - Type "R" Ø4,5 X 80mm		6	3	3	3	3	8	5	5	3
58	5432080013-0	Lock Pin Ø31 X 70mm Without Grease Fitting(Hydraulic Opening)	1									
59	6020050108-2	Cotterpin 3/16" X 2"	2									
60	5024010059-0	Smooth Washer Ø16,5 X Ø29 X 1,21mm							2	2	2	2
61	6020310183-2	Hexagonal Head Bolt 5/8" X 1" 11F Unc1A Gr2 Rt	2									
62	6020311046-7	Hexagonal Head Bolt 1/2" X 3/4" 12F W Gr2 Rt							1	1	1	1
63	5192010046-9	Complete Chain De 05,5mm 510mm Cpl							1	1	1	1
64	5040100014-0	Lifting Bar Of Gang	1									
65	5084040111-9	Hitch Drawbar For Transport	1									
66	5192020034-0	Chain Of 1723mm(35 Elos)	1									
67	5432120029-2	French Head Pin Ø30,53 X 113mm		1	1	1	1	1	1	1	6	1
68	5498100003-2	Complete Wheel 600 X 16		2								
68	5498100003-2	Complete Wheel 650 X 16			2	2	2	2	2	2	2	2
69	6020350400-7	Rim 4,50X16 F16.388 43/03 (Harrow)	2									
70	6020310400-9	Tyre 600X16X06Ls.		2								
70	6020310376-2	Tyre 650X16X08Ls.			2	2	2	2	2	2	2	2
71	6020050350-6	Inner Tube 600X16	2									

• NVF Tandem (Double Hitch Drawbar)

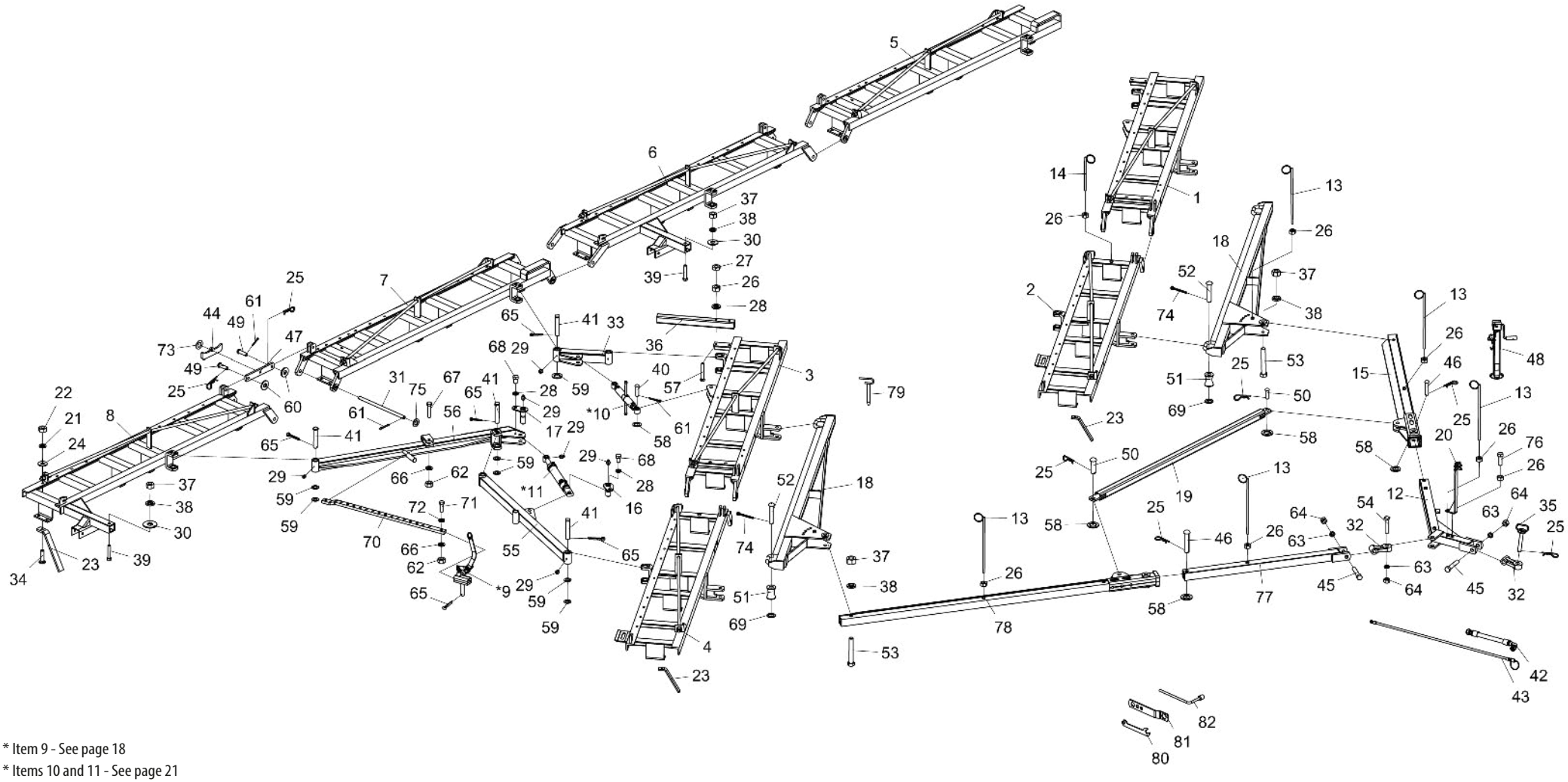

* Item 9 - See page 18
* Items 10 and 11 - See page 21

BALDAN

• Table NVF Tandem (Double Hitch Drawbar)

Item	Code	Product description	All	NVF 44 Discs	NVF 52 Discs	NVF 60 Discs
1	5022011235-4	Left Front Gang Nvf-44(Left) Spacing 200Mm Without Wheel Ced		1		
1	5022011237-0	Left Front Gang Nvf-52(Left) Spacing 200Mm Complete Ced			1	
1	5022011812-3	Left Front Gang NVF-60 Spacing200mm(Ced)				1
2	5022010874-8	Right Front Gang 44 Discs - CED		1		
2	5022011230-3	Right Front Gang Nvf-52(Left) Spacing 200Mm Complete Ced			1	
2	5022011211-7	Right Front Gang Nvf-60(Left) Spacing 200Mm Complete Ced				1
3	5022010077-1	Left Front Gang Nvf-44(Left) Spacing 200Mm Without Wheel		1		
3	5022010460-2	Left Front Gang Nvf-52(Left) Spacing 200Mm			1	
3	5022011812-3	Left Front Gang NVF-60 Spacing200mm(Ced)				1
4	5022010874-8	Right Front Gang 44 Discs - CED		1		
4	5022010465-3	Right Front Gang Nvf-52(Left) Spacing 200Mm			1	
4	5022011810-7	Right Front Gang NVF-60(Esq) Spacing200mm(Ced)				1
5	5022010078-0	Left Rear Gang Nvf-44(Left) Spacing 200Mm With Wheel		1		
5	5022010462-9	Left Rear Gang Nvf-52(Left) Spacing 200Mm			1	
5	5022010474-2	Left Rear Gang Nvf-60(Left) Spacing 200Mm				1
6	5022010871-3	Right Rear Gang 44 Discs - CED		1		
6	5022011231-1	Right Rear Gang Nvf-52(Left) Spacing 200Mm Complete Ced			1	
6	5022011216-8	Right Rear Gang Nvf-60(Left) Spacing 200Mm Complete Ced				1
7	5022010872-1	Left Rear Gang Nvf-44(Left) Spacing 200Mm Ced		1		
7	5022011232-0	Left Rear Gang Nvf-52(Left) Spacing 200Mm Complete Ced			1	
7	5022011213-3	Left Rear Gang Nvf-60(Left) Spacing 200Mm Complete Ced				1
8	5022010873-0	Right Rear Gang 44 Discs - CED		1		
8	5022010464-5	Right Rear Gang Nvf-52(Left) Spacing 200Mm			1	
8	5022010476-9	Right Rear Gang Nvf-60(Left) Spacing 200Mm				1
*9	5468010014-7	Complete Lock Handle	2			
*10	5484010065-3	Complete Regulator	2			
*11	6020055721-5	Hydraulic Cylinder "O.D" Ø1.5/8" X Ø2.1/2" X 336Mm(Course) X 680Mm(Closed)	2			
12	5084010084-4	Front Hitch Drawbar		1	1	
12	5084010214-6	Front Hitch Drawbar				1
13	5530060020-3	Hoses Support		10	7	9
14	5530060001-7	Small Support Of Hoses		2		2
15	5084010086-0	Large Left Drawbar		1	1	
15	5084010213-8	Large Left Drawbar(Ced-120 Dsc)				1
16	5432080013-0	Lock Pin Ø31 X 70Mm Without Grease Fitting(Hydraulic Opening)	2			
17	5432080008-3	Lock Pin Ø31 X 95Mm Without Grease Fitting(Hydraulic Opening)	2			
18	5084010103-4	Drawbar Tandem Nvf-44 Dics Ced		2		
18	5084010088-7	Drawbar Tanden Nvf			2	
18	5040010693-0	Hitch Transversal Bar Ced-120 Discs				2
19	5530011770-7	Stabilizer Central Support Nvf-44 Discs Ced		1		
19	5530011194-6	Stabilizer Central Support			1	
19	5530014795-9	Stabilizer Central Support Nvf-60 Ced				1
20	5226010020-3	Complete Oil Divider	1			
21	6020010410-5	Pressure Washer 1/2" Media Industry		58	64	80
22	6020310754-7	Hexagonal Nut 1/2" 12F W Gr5 Ch.7/8" Height 12,00Mm		56	64	80
23	5352030058-5	Discs Scraper		56	64	80
24	5024010068-9	Smooth Washer Ø13,3 X Ø35,5 X 3,00Mm		56	64	80
25	6020390308-4	Lock Nma - Type "R" Ø4,5 X 80Mm		10	11	13
26	6020310760-1	Hexagonal Nut 5/8" 11F Unc Gr5 Ch.1.1/16" Height 15,00Mm		4	4	16
27	6020310738-5	Hexagonal Nut 5/8" 11F Unc Gr5 Ch.1.1/16" Height 11,00Mm	4			
28	6020010412-1	Pressure Washer 5/8" Media Industry	12			
29	6020130108-7	Grease Fitting 1/8"	18			
30	5024010634-2	Smooth Washer Ø26,8 X Ø66,5 X 4,75Mm				2
31	5232200003-0	Union Shaft Ø1.1/8" X 582Mm	5			
32	5332010023-9	Drawbar Lateral Shackle Tandem	2			
33	5040070013-0	Union Bar 495Mm	2			
34	6020311176-5	French Head Bolt 1/2" X 2" 12F W Gr2 Rp		56	64	80
35	5432060023-8	Pin Ø1" X 210Mm		2	2	
35	5432010025-1	Pin Ø1.1/4" X 215Mm				1
36	5572070328-8	Beam 70 X 70 X 750mm	2			
37	6020310778-4	Hexagonal Nut 1" 8F Unc Gr5 Ch.1.5/8" Height 25,00Mm		3	19	4
38	6020010420-2	Pressure Washer 1" Media Industry		3	3	4
39	6020311136-6	Hexagonal Head Bolt 1" X 5.1/2" 8F Unc1A Gr5 Rp	2			
40	5432120090-0	French Head Pin Ø30,53 X 97Mm	4			
41	5432040003-4	Square Head Pin Ø37,5 X 190Mm	10			
42	6020250822-0	High Pressure Hydraulic Hose 3/8" X 7200Mm With 1Tcg And 1Trg (Sae 100R2 At -		2	2	
42	6020250846-7	High Pressure Hydraulic Hose 3/8" X 9200Mm With 1Tcg And 1Trg (Sae 100R2 At -				2
42	6020250823-8	High Pressure Hydraulic Hose 3/8" X 5500Mm With 1Tcg And 1Trg (Sae 100R2 At -		2	2	
42	6020250845-9	High Pressure Hydraulic Hose 3/8" X 6500Mm With 1Tcg And 1Trg (Sae 100R2 At -				2

• Table NVF Tandem (Double Hitch Drawbar)

Item	Code	Product description	All	NVF 44 Discs	NVF 52 Discs	NVF 60 Discs
43	5372011103-5	Hose Ø3/8" X 1500Mm With 1Trg And 1Trf With Male Quickly Coupling	2			
44	5558010496-6	Lock for Transport	4			
45	6020311156-0	Hexagonal Head Bolt 1.1/4" X 7" 7F Unc1A Gr5 Rp	2			
46	6020310639-7	Pin Ø30,53 X 106mm		2	2	
46	5432120031-4	French Head Pin Ø30,53 X 135Mm				2
47	5558010497-4	Gangs Lock	4			
48	6020370264-0	Complete Support Of Lifting (Hydraulic Field Jack)	1			
49	6020310597-8	Pin Ø3/4" X 62mm	8			
50	6020310665-6	French Head Pin Ø30,53 X 85mm	2			
51	5120010041-0	Spool Of 027 X 057 X 75Mm	4			
52	6020310662-1	French Head Pin Ø1" X 125mm	4			
53	6020311138-2	Hexagonal Head Bolt 1" X 6" 8F Unc1A Gr5 Rp		2	2	
53	6020311140-4	Hexagonal Head Bolt 1" X 7" 8F Unc1A Gr5 Rp		1	1	2
54	5420010073-8	Square Head Bolt 1.1/4" X 6" Rp-Forged	1			
55	5040070014-9	Front Bar		2		
55	5040070015-7	Front Bar			2	
55	5040070012-2	Front Bar				2
56	5040010077-0	Left Rear Stabilizer Bar		2		
56	5040010078-8	Left Rear Stabilizer Bar			2	
56	5040010079-6	Left Rear Stabilizer Bar				2
57	6020311087-4	Hexagonal Head Bolt 5/8" X 4.1/2" 11F Unc1A Gr5 Rp	4			
58	5024010061-1	Smooth Washer Ø33,5 X Ø53,5 X 4,75Mm		4	4	8
59	5024010130-8	Smooth Washer Ø39 X Ø66 X 4,75Mm(Galvanised)		10	10	20
60	5024010007-7	Smooth Washer Ø20,3 X Ø46,5 X 4,75Mm		4	4	8
62	6020050114-7	Cotterpin 1/4" X 1.1/2"		10	12	
62	6020050116-3	Cotterpin 1/4" X 2"				16
62	6020310770-9	Hexagonal Nut 3/4" 10F Unc Gr5 Ch.1.7/32" Height 18,50Mm	4			
63	6020010424-5	Pressure Washer 1.1/4" Media Industry	3			
64	6020310793-8	Hexagonal Nut 1.1/4" 7F Unc Gr5 Ch.2" Height 31,00Mm		3	3	5
65	6020050122-8	Cotterpin 3/8" X 2.1/2"		14	12	12
66	6020010414-8	Pressure Washer 3/4" Media Industry		4	2	4
67	6020311098-0	Hexagonal Head Bolt 3/4" X 3.1/2" 10F Unc1A Gr5 Rp	2			
68	6020310183-2	Hexagonal Head Bolt 5/8" X 1" 11F Unc1A Gr2 Rt		10	4	4
69	5024010072-7	Smooth Washer Ø26 X Ø40 X 2,00Mm				4

Item	Code	Product description	All	NVF 44 Discs	NVF 52 Discs	NVF 60 Discs
71	6020311096-3	Hexagonal Head Bolt 3/4" X 2.1/2" 10F Unc1A Gr5 Rp		2	2	
71	6020311094-7	Hexagonal Head Bolt 3/4" X 2.1/4" 10F Unc1A Gr5 Rt				2
72	5024010723-3	Smooth Washer Of Ø20,5 X Ø28 X 4,75Mm				2
73	5024010059-0	Smooth Washer Ø16,5 X Ø29 X 1,21Mm				2
74	6020050108-2	Cotterpin 3/16" X 2"		4	4	4
75	5024010192-8	Smooth Washer Ø30 X Ø52 X 4,75Mm(Galvanised)	10			
76	6020310180-8	Hexagonal Head Bolt 5/8" X 2" 11F Unc1A Gr5 Rp				1
77	5572017304-1	Front Beam		1	1	
77	5084010211-1	Front Drawbar				1
78	5084010087-9	Large Right Drawbar		1	1	
78	5084010212-0	Large Right Drawbar (Ced-120 Dsc)				1
79	5432060027-0	Pin Ø3/4" X 155Mm		1	1	
80	5138020001-9	Wrench For Hexagonal Nut 3/8" - 1/2"	1			
81	5138090001-0	Wrench For Hexagonal Nut 1.1/4" - 1" - 3/4" - 5/8"		2	2	1
82	6020058710-6	Wrench For Hexagonal Nut 5/8"	1			

• Hitch Drawbar

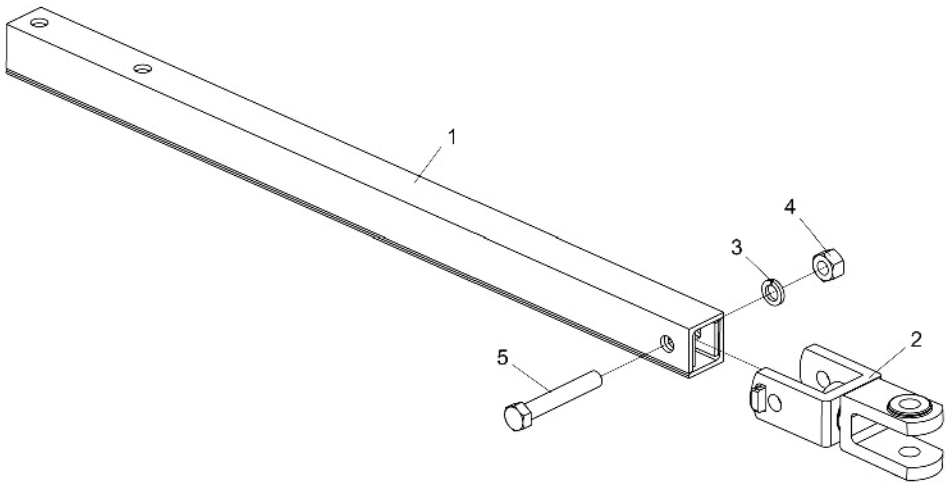

Item	Code	Product description	All
1	5084030003-7	Hitch Drawbar (10 To 20 Discs W/ Mechanic Opening)	1
2	5332010008-5	Hitch Shackle	1
3	6020010420-2	Pressure Washer 1" Media Industry	1
4	6020310778-4	Hexagonal Nut 1" 8F Unc Gr5 Ch.1.5/8" Height 25,00Mm	1
5	6020311139-0	Hexagonal Head Bolt 1" X 6.1/2" 8F Unc1A Gr5 Rp	1

• Lock Handle

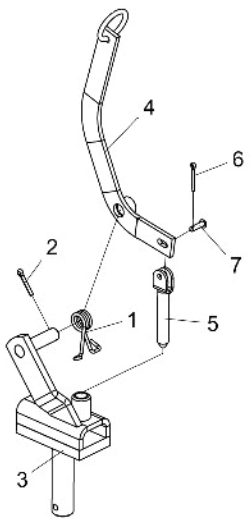

Item	Code	Product description	All
1	6020250372-4	Torsion Helical Spring Ø26 X Ø36 X 78Mm	1
2	6020050114-7	Cotterpin 1/4" X 1.1/2"	1
3	5170020027-6	Complete Lock Handle Support	1
4	5090020011-8	Complete Lock Handle	1
5	5432060017-3	Pin Of Ø19 X 110Mm With Plate	1
6	6020050101-5	Cotterpin 1/8" X 1"	1
7	6020310825-0	French Head Pin Ø8,3 X 25mm	1

• Front Left Gang NVF-P

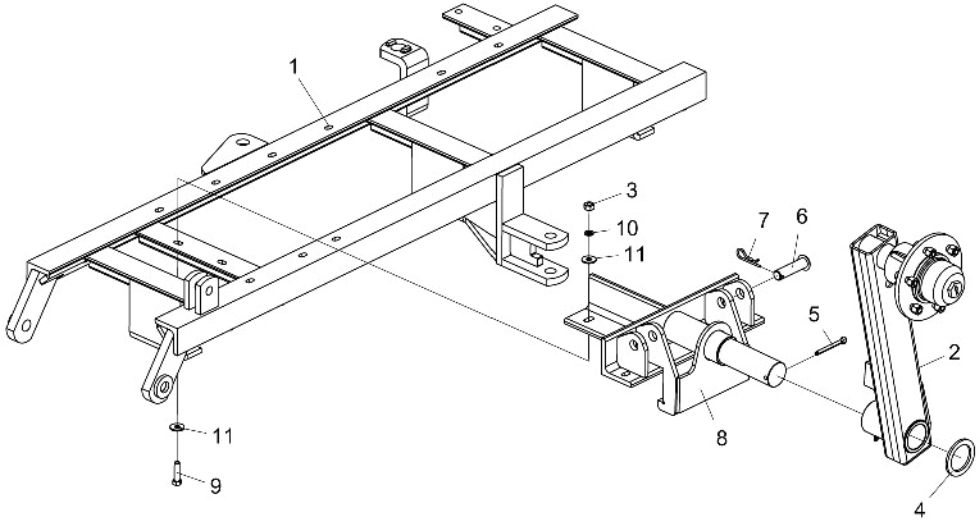

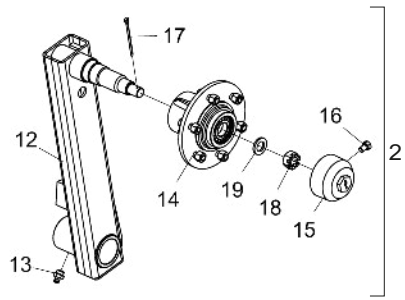

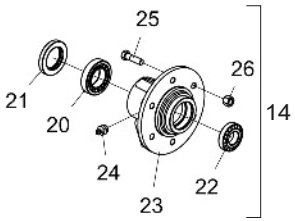

Item	Code	Product description	All	NVF 40 Discs	NVF 44 Discs	NVF 48 Discs	NVF 52 Discs	NVF 56 Discs	NVF 60 Discs	NVF 64 Discs	NVF 68 Discs	NVF 72 Discs
1	5022010081-0	Right Front Gang Nvf-40(Left) Spacing 200Mm		1								
1	5022011072-6	Right Front Gang Nvf-44(Left) Spacing 200Mm			1							
1	5022011073-4	Right Front Gang Nvf-48(Left) Spacing 200Mm				1						
1	5022010085-2	Right Front Gang Nvf-52(Left) Spacing 200Mm					1					
1	5022010093-3	Right Front Gang Nvf-56(Left) Spacing 200Mm						1				
1	5022010089-5	Right Front Gang Nvf-60(Left) Spacing 200Mm							1			
1	5022010097-6	Right Front Gang Nvf-64(Left) Spacing 200Mm								1		
1	5022010101-8	Right Front Gang Nvf-68(Left) Spacing 200Mm									1	
1	5022010105-0	Right Front Gang Nvf-72(Left) Spacing 200Mm										1
2	5326030061-6	Wheel Left Shank	1									
3	6020310754-7	Hexagonal Nut 1/2" 12F W Gr5 Ch.7/8" Height 12,00Mm	5									
4	5024010109-0	Smooth Washer Ø71 X Ø97 X 6,30Mm	1									
5	6020050126-0	Cotterpin 3/8" X 3.1/2"	1									
6	6020310596-0	French Head Pin Ø1" X 90mm	1									
7	6020390308-4	Lock Nma - Type "R" Ø4,5 X 80Mm	1									
8	5530010282-3	Front Support	1									
9	6020310049-6	Hexagonal Head Bolt 1/2" X 2" 12F W Gr5 Rp	5									
10	6020010410-5	Pressure Washer 1/2" Media Industry	5									
11	5024010068-9	Smooth Washer Ø13,3 X Ø35,5 X 3,00Mm	10									
12	5326030059-4	Right Shank With Wheel Shaft	1									
13	6020130108-7	Grease Fitting 1/8"	1									
14	5204060025-6	Complete Wheel Hub	1									
15	5096020004-4	Wheel Hub Cap	1									
16	6020311020-3	Hexagonal Head Bolt 5/16" X 1/2" 18F Unc1A Gr2 Rt	1									
17	6020050102-3	Cotterpin 1/8" X 2.1/2"	1									
18	6020310800-4	Nut 1" 14F Uns Gr5 Ch.1.1/2" Height 22,00Mm	1									
19	5024010039-5	Smooth Washer Ø26,2 X Ø44 X 4,75Mm	1									
20	6020350056-7	Bearing 32210	1									
21	6020350224-1	Retainer Ø55,00 X Ø90,00 X 12,50Mm	1									
22	6020350080-0	Bearing 30207	1									
23	5204010063-6	Wheel Hub (Spare)	1									
24	6020130108-7	Grease Fitting 1/8"	1									
25	6020310998-1	Hexagonal Head Bolt 9/16" X 2" 18F Unf1A Gr5 Rp	6									
26	6020310816-0	Double Conic Hexagonal Nut Of Wheel 9/16" 18F Unf Gr5 Ch.7/8"	6									

• Rear Left Gang NVF-P

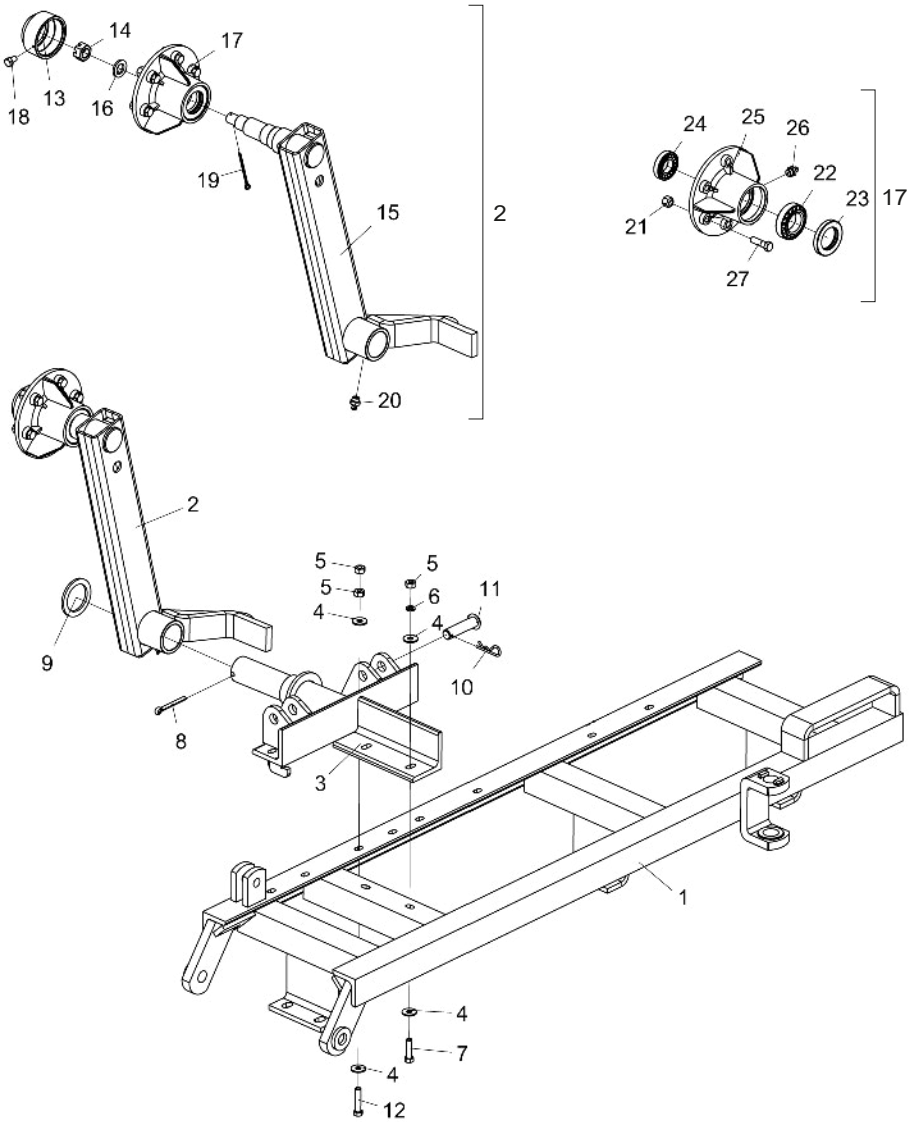

Item	Code	Product description	All	NVF 40 Discs	NVF 44 Discs	NVF 48 Discs	NVF 52 Discs	NVF 56 Discs	NVF 60 Discs	NVF 64 Discs	NVF 68 Discs	NVF 72 Discs
1	5022011071-8	Left Rear Gang Nvf-40(Left) Spacing 200mm		1								
1	5022011070-0	Left Rear Gang Nvf-44(Left) Spacing 200mm			1							
1	5022011069-6	Left Rear Gang Nvf-48(Left) Spacing 200mm				1						
1	5022010086-0	Left Rear Gang Nvf-52(Left) Spacing 200mm					1					
1	5022010094-1	Left Rear Gang Nvf-56(Left) Spacing 200mm						1				
1	5022010090-9	Left Rear Gang Nvf-60(Left) Spacing 200mm							1			
1	5022010098-4	Left Rear Gang Nvf-64(Left) Spacing 200mm								1		
1	5022010102-6	Left Rear Gang Nvf-68(Left) Spacing 200mm									1	
1	5022010106-9	Left Rear Gang Nvf-72(Left) Spacing 200mm										1
2	5326030062-4	Wheel Right Shank	1									
3	5530010281-5	Rear Support	1									
4	5024010068-9	Smooth Washer Ø13,3 X Ø35,5 X 3,00mm	12									
5	6020310754-7	Hexagonal Nut 1/2" 12F W Gr5 Ch.7/8" Height 12,00mm	6									
6	6020010410-5	Pressure Washer 1/2" Media Industry	6									
7	6020310049-6	Hexagonal Head Bolt 1/2" X 2" 12F W Gr5 Rp	4									
8	6020050126-0	Cotterpin 3/8" X 3.1/2"	1									
9	5024010109-0	Smooth Washer Ø71 X Ø97 X 6,30mm	1									
10	6020390308-4	Lock Nma - Type "R" Ø4,5 X 80mm	1									
11	6020310596-0	French Head Pin Ø1" X 90mm	1									
12	6020312300-3	Hexagonal Head Bolt 1/2" X 2.1/2" 12F W Gr5 Rp	2									
13	5096020004-4	Wheel Hub Cap	1									
14	6020310800-4	Nut 1" 14F Uns Gr5 Ch.1.1/2" Height 22,00mm	1									
15	5326030060-8	Right Shank With Shaft	1									
16	5024010039-5	Smooth Washer Ø26,2 X Ø44 X 4,75mm	1									
17	5204060025-6	Complete Wheel Hub	1									
18	6020311020-3	Hexagonal Head Bolt 5/16" X 1/2" 18F Unc1A Gr2 Rt	1									
19	6020050102-3	Cotterpin 1/8" X 2.1/2"	1									
20	6020130108-7	Grease Fitting 1/8"	1									
21	6020310816-0	Double Conic Hexagonal Nut 9/16" 18F Unf Gr5 Ch.7/8"	6									
22	6020350056-7	Bearing 32210	1									
23	6020350224-1	Retainer Ø55,00 X Ø90,00 X 12,50mm	1									
24	6020350080-0	Bearing 30207	1									
25	5204010063-6	Wheel Hub (Spare)	1									
26	6020130108-7	Grease Fitting 1/8"	1									
27	6020310998-1	Hexagonal Head Bolt 9/16" X 2" 18F Unf1A Gr5 Rp	6									

• Complete Regulator

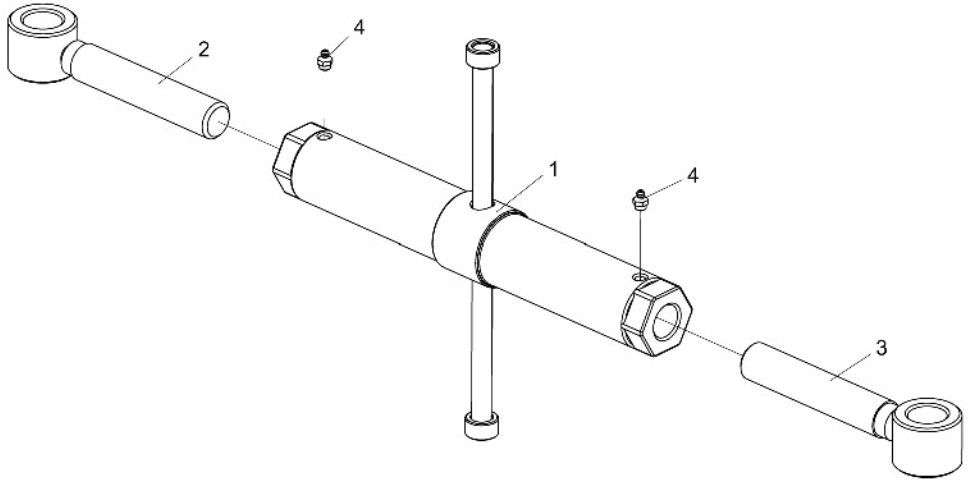

Item	Code	Product description	All
1	5484010014-9	Draw Bar Regulator	1
2	5484040003-7	Regulator R.1.1/4"Unc X 197Mm With Bushing	1
3	5484040002-9	Regulator R.1.1/4"Unc Left X 197Mm	1
4	6020130108-7	Grease Fitting 1/8"	2

• Cylinder of Gangs Articulation

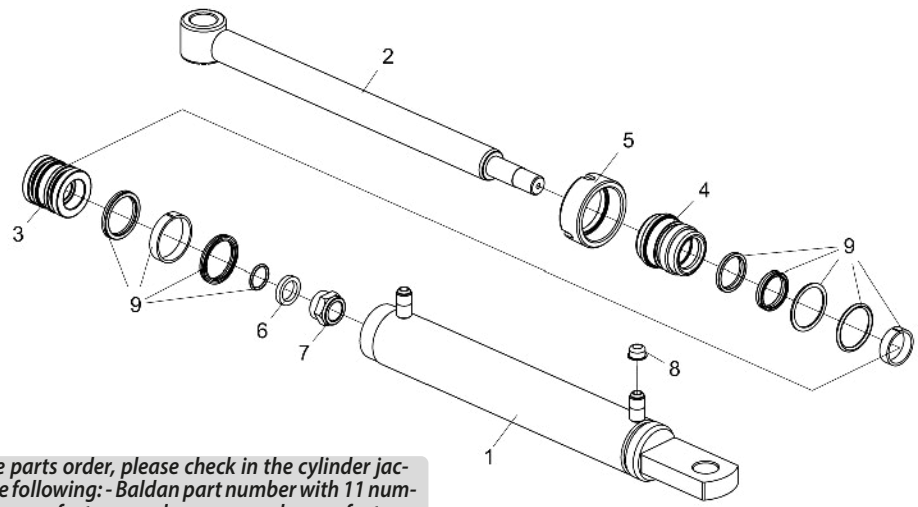

Item	Code	Product description	All
1	5144010581-9	Jacket Ø63,50 (2.1/2") x 564mm	1
2	5326020008-5	Piston Rod Ø41.27 (1.5/8") x 501.5mm Completa	1
3	5236010005-7	Piston Plung de Ø26,72 x Ø62,90 x 60mm	1
4	5152010005-2	Piston Coupling Ø41,10 X Ø70 X 68MM	1
5	5456050005-2	Cylindric Nut 73,75 12F (Piston)	1
6	5024010110-3	Smooth Washer Ø27 X Ø38 X 1/4"	1
7	5456140002-7	Nut W/Nylon R.1" Uns 14Fpp - Wrench 1.1/2" - Height 28,0Mm Special	1
8	6020390042-5	Plastic Cover Bt-21	2
9	6020190065-7	Repair Kit For Hydraulic Cylinders "D.A" 1.5/8" X 2.1/2"	1

For spare parts order, please check in the cylinder jacket (1), the following: - Baldan part number with 11 numbers, the manufacturer code, name and manufacturer date.

BALDAN

• Discs Section NVF/NVF-P

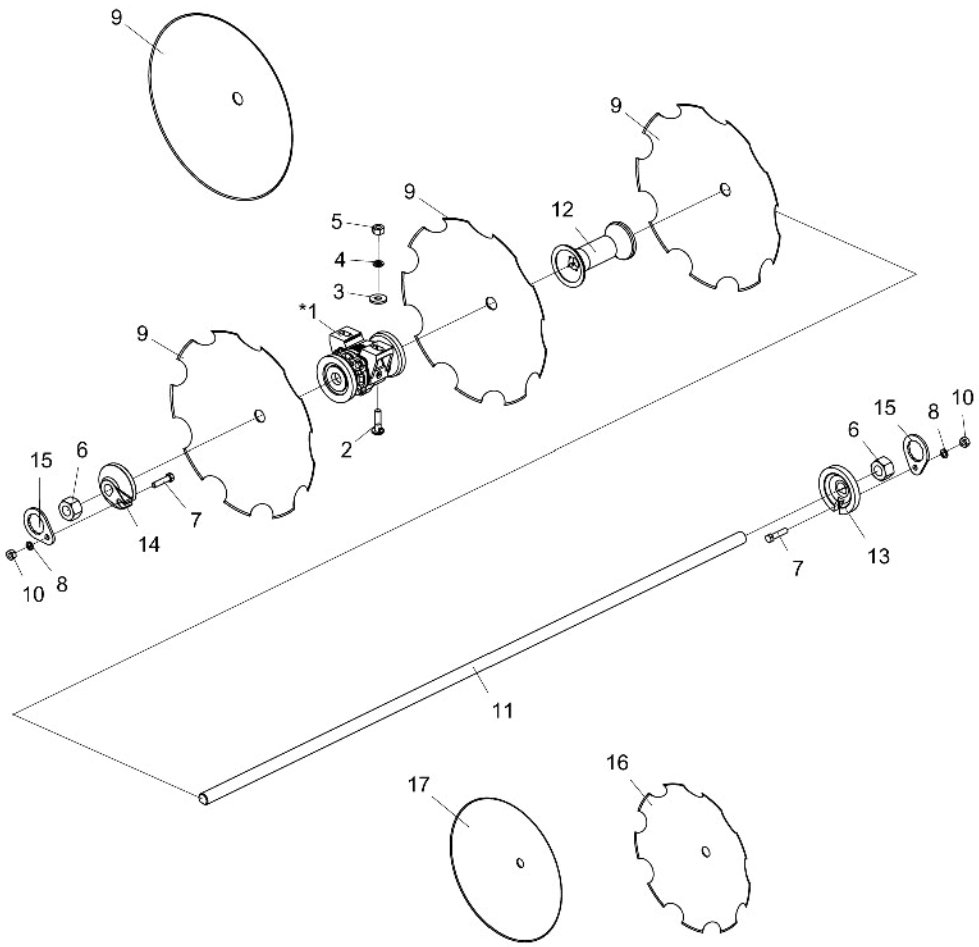

Item	Code	Product description	All	NVF 40 Discs	NVF 44 Discs	NVF 48 Discs	NVF 52 Discs	NVF 56 Discs	NVF 60 Discs	NVF 64 Discs	NVF 68 Discs	NVF 72 Discs	NVF 44 Discs TANDEM	NVF 52 Discs TANDEM	NVF 60 Discs TANDEM
*1	5368010137-6	Grease Bearing Of 200mm For Shaft Ø1.1/4"		12	12	12	16	16	16	16	20	20	24	32	32
*1	5368010139-2	Complete Oil Bearing Of 200mm For Shaft Ø1.1/4"		12	12	12	16	16	16	16	20	20	24	32	32
*1	5368010491-0	Complete Axial (Oil) r Bearing Of 200mm For Shaft Ø1.1/4"		12	12	12	16	16	16	16	20	20	24	32	32
*1	5368020013-7	Complete Friction Bearing Of 190mm With Shaft Ø1.1/4"		12	12	12	16	16	16	16	20	20	24	32	32
2	6020312010-1	French Head Bolt 5/8" X 2.1/4" 11F Unc1A Gr5 Rp With Lock		24	24	24	32	32	32	32	40	40	48	64	64
3	5024010298-3	Smooth Washer Ø17 X Ø44 X 4,75mm		24	24	24	32	32	32	32	40	40	48	64	64
4	6020010412-1	Pressure Washer 5/8" Media Industry		24	24	24	32	32	32	32	40	40	48	64	64
5	6020310760-1	Hexagonal Nut 5/8" 11F Unc Gr5 Ch.1.1/16"		24	24	24	32	32	32	32	40	40	48	64	64
6	6020310793-8	Hexagonal Nut 1.1/4" 7F Unc Gr5 Ch.2" Height 31,00mm		8	8	8	16	16	16	16	16	16	16	32	32
7	6020312060-8	Hexagonal Head Bolt 1/2" X 2.1/4" 12F W Gr5 Rp		8	8	8	16	16	16	16	16	16	16	32	32
8	6020010410-5	Pressure Washer 1/2" Media Industry		8	8	8	16	16	16	16	16	16	16	32	32
9	2663360181-9	Concave Plain Disc Blade 20 X 3,50 Hc Rd 1.1/4 Single Bevel		40	44	48	52	56	60	64	68	70	88	104	120
9	2663400181-5	Concave Plain Disc Blade 20 X 4,50 Hc Rd 1.1/4 Single Bevel		40	44	48	52	56	60	64	68	70	88	104	120
9	2665360181-5	Concave Plain Disc Blade 22 X 3,50 Hc Rd 1.1/4 Single Bevel		40	44	48	52	56	60	64	68	70	88	104	120
9	2665400181-1	Concave Plain Disc Blade 22 X 4,50 Hc Rd 1.1/4 Single Bevel		40	44	48	52	56	60	64	68	70	88	104	120
9	2763360181-5	Concave Notched Disc Blade 20 X 3,50 Hc Rd 1.1/4 Single Bevel		40	44	48	52	56	60	64	68	70	88	104	120
9	2763390181-9	Concave Notched Disc Blade 20 X 4,00 Hc Rd 1.1/4 Single Bevel		40	44	48	52	56	60	64	68	70	88	104	120
9	2763400181-1	Concave Notched Disc Blade 20 X 4,50 Hc Rd 1.1/4 Single Bevel		40	44	48	52	56	60	64	68	70	88	104	120
9	2765360181-1	Concave Notched Disc Blade 22 X 3,50 Hc Rd 1.1/4 Single Bevel		40	44	48	52	56	60	64	68	70	88	104	120
9	2765400181-8	Concave Notched Disc Blade 22 X 4,50 Hc Rd 1.1/4 Single Bevel		40	44	48	52	56	60	64	68	70	88	104	120
10	6020310754-7	Hexagonal Nut 1/2" 12F W Gr5 Ch.7/8" Height 12,00mm													
11	5232050134-2	Shaft Ø1.1/4" X 2200mm			4								8		
11	5232050197-0	Shaft Ø1.1/4" X 2400mm				4									
11	5232050136-9	Shaft Ø1.1/4" X 1180mm					4							8	
11	5232050137-7	Shaft Ø1.1/4" X 1390mm					4	8	4					8	8
11	5232050058-3	Shaft Ø1.1/4" X 1600mm							4	8	4	4			8
11	5232050036-2	Shaft Ø1.1/4" X 1810mm									4				
11	5232050138-5	Shaft Ø1.1/4" X 2000mm		4								4			
12	5120010019-4	Spool 200mm For Shaft ø1.1/4"		24	28	32	28	32	36	40	40	44	56	56	72
13	6010601053-9	Concave Stop Washer For Shaft Ø1.1/4"		4	4	4	8	8	8	8	8	8	8	16	16
14	6010601054-7	Convex Stop Washer For Shaft Ø1.1/4"		4	4	4	8	8	8	8	8	8	8	16	16
15	5558050004-7	Lock Of Nut Of Shaft		8	8	8	16	16	16	16	16	16	16	32	32
16	2761340181-0	Concave Notched Disc Blade 18 X 3,00 Hc Rd 1.1/4 Single Bevel	2												
17	2661340181-3	Concave Plain Disc Blade 18 X 3,00 Hc Rd 1.1/4 Single Bevel	2												
17	2661390181-6	Concave Plain Disc Blade 18 X 4,00 Hc Rd 1.1/4 Single Bevel	2												

* Item 1:
- Radial (Grease/Oil) - See page 23
- Axial (Oil)/Friction - See page 24

Disc Harrows with friction bearings do not use Items 2, 3, 4 and 5.

• Radial Bearing (Grease)

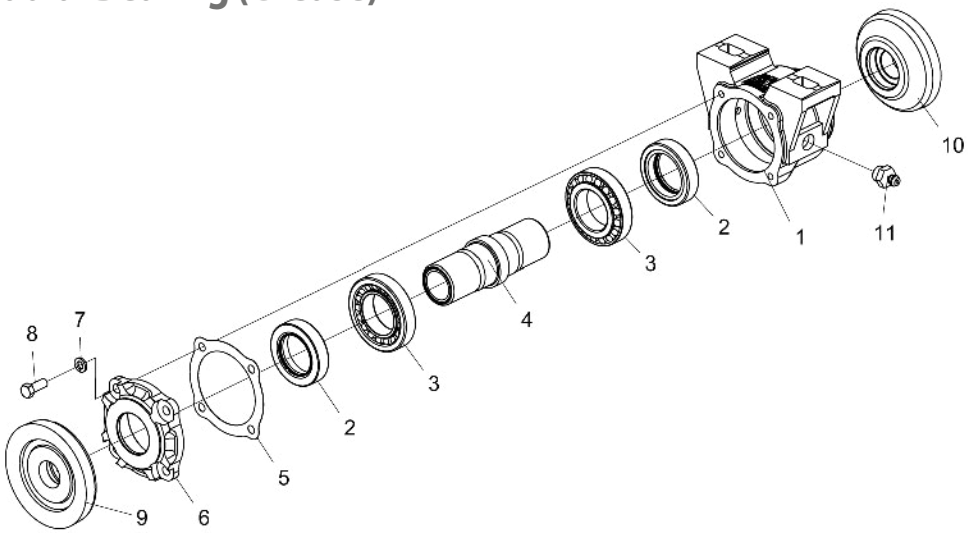

Item	Code	Product description	All
1	5368010079-5	Spare Front/Rear Grease Bearing (Without Protection	1
2	6020350236-5	Retainer Ø49,00 X Ø76,10 X 17,50Mm	2
3	6020350054-0	Bearing 30210	2
4	5080010284-4	Bearing Bushing For Shaftø1.1/4"	1
5	6020190104-1	Gascket Ø90 X Ø134 X 1/64"	3
6	5538010031-1	Bearing Cover	1
7	6020010406-7	Pressure Washer 3/8" Media Industry	4
8	6020310021-6	Hexagonal Head Bolt 3/8" X 1" 16F Unc1A Gr5 Rt	4
9	5024060035-5	Concave Back Washer 200Mm	1
10	5024060036-3	Washer Of 200Mm	1
11	6020130108-7	Grease Fitting 1/8"	2

• Radial Bearing (Oil)

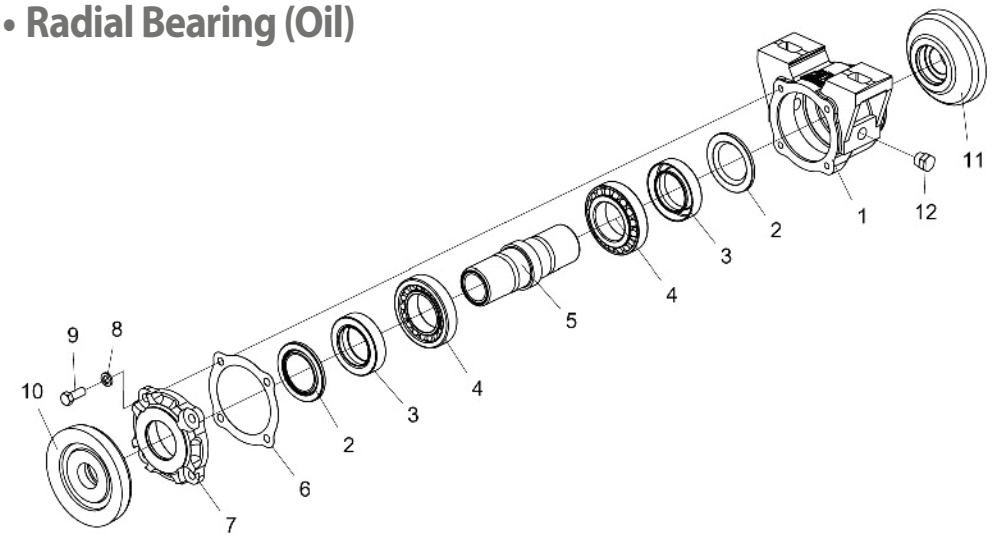

Item	Code	Product description	All
1	5368010077-9	Spare Front/Rear Oil Bearing (Without Protection	1
2	6020010472-5	Washer 1199(Joinseal)-1002(Arca)	2
3	6020350291-8	Retainer Ø49,00 X Ø76,00 X 17,50Mm	2
4	6020350054-0	Bearing 30210	2
5	5080010284-4	Bearing Bushing For Shaftø1.1/4"	1
6	6020190104-1	Gascket Ø90 X Ø134 X 1/64"	3
7	5538010031-1	Bearing Cover	1
8	6020010406-7	Pressure Washer 3/8" Media Industry	4
9	6020310021-6	Hexagonal Head Bolt 3/8" X 1" 16F Unc1A Gr5 Rt	4
10	5024060035-5	Concave Back Washer 200Mm	1
11	5024060036-3	Washer Of 200Mm	1
12	5081010007-6	Hexagonal Head Plug 3/4" - R.3/8" - 19F - Bspt(Gas)	2

• Axial Bearing (Oil)

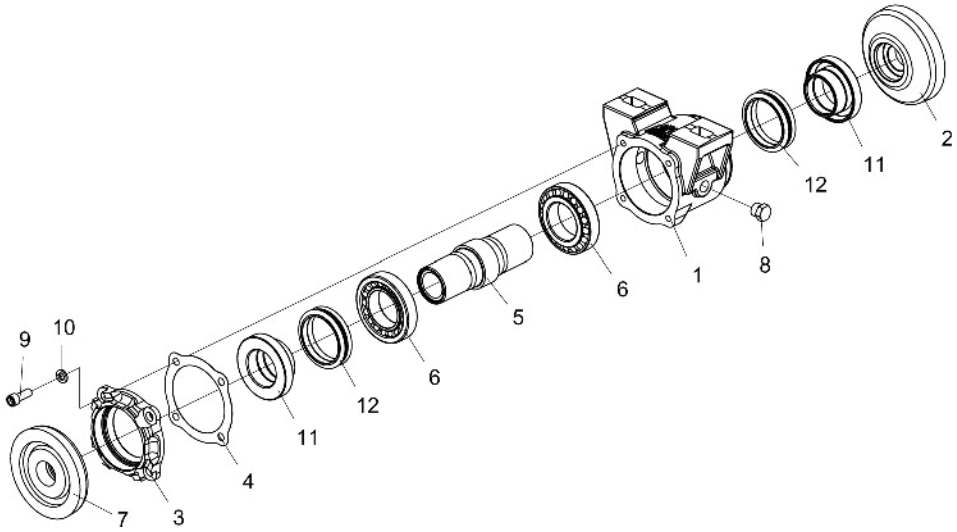

Item	Code	Product description	All
1	5368010406-5	Axial Spare Front/Rear Bearing Without Protection	1
2	5024010739-0	Washer Of 200Mm	1
3	5538016078-0	Bearing Cover	1
4	6020190104-1	Gascket Ø90 X Ø134 X 1/64"	3
5	5080010320-4	Axial Bearing Bushing	1
6	6020350054-0	Bearing 30210	2
7	5024010738-1	Concave Back Washer 200Mm	1
8	5081010007-6	Hexagonal Head Plug 3/4" - R.3/8" - 19F - Bspt(Gas)	2
9	6020310189-1	Allen Bolt C/C 3/8" X 1" 16F Unc1A Rt (Phosphated)	4
10	6020010406-7	Pressure Washer 3/8" Media Industry	4
11	5080010319-0	Axial Bushing	2
12	6020010992-1	Axial Gascket Ring Ø62 X Ø78Mm	2

• Friction Bearing

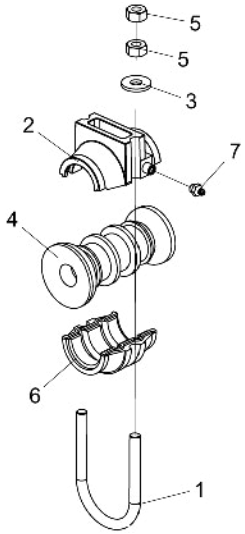

Item	Code	Product description	All
1	5068010059-1	Clamp Ø5/8" X 111Mm	1
2	5368020014-5	Upper Friction Bearing	1
3	5024010298-3	Smooth Washer Ø17 X Ø44 X 4,75Mm	2
4	6010600101-7	Spool With Ring	1
5	6020310760-1	Hexagonal Nut 5/8" 11F Unc Gr5 Ch.1.1/16" Height 15,00Mm	4
6	6010600061-4	Lower Friction Bearing	1
7	6020130108-7	Grease Fitting 1/8"	1

• Sitckers NVF/NVF-P

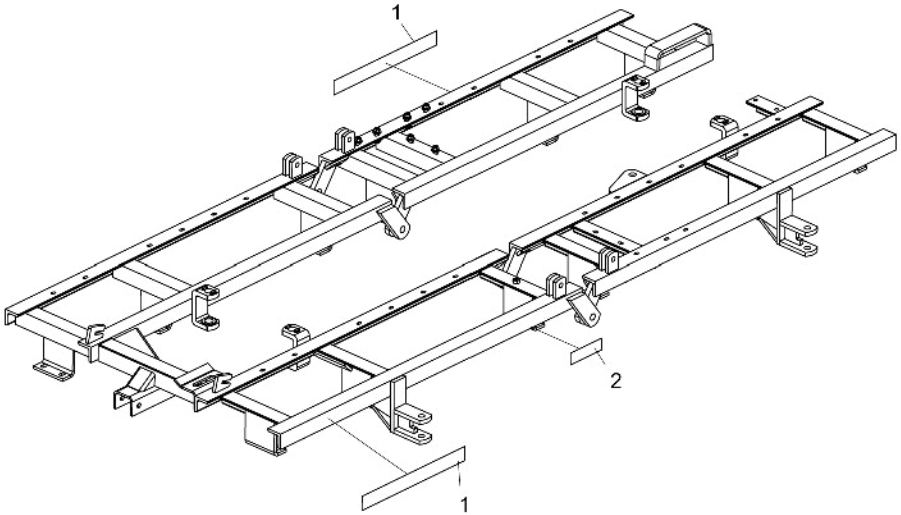

Item	Code	Product description	All	NVF	NVF-P
1	6020071343-8	Sticker Nvf Baldan (650 X 70Mm)		2	
1	6020071113-3	Sticker Nvf-P Baldan (650 X 70Mm)			2
2	6020070886-8	Sticker Lubricate And Retighten (58 X 195Mm)	1		

Item 1

Item 2

• Sitckers NVF Tandem

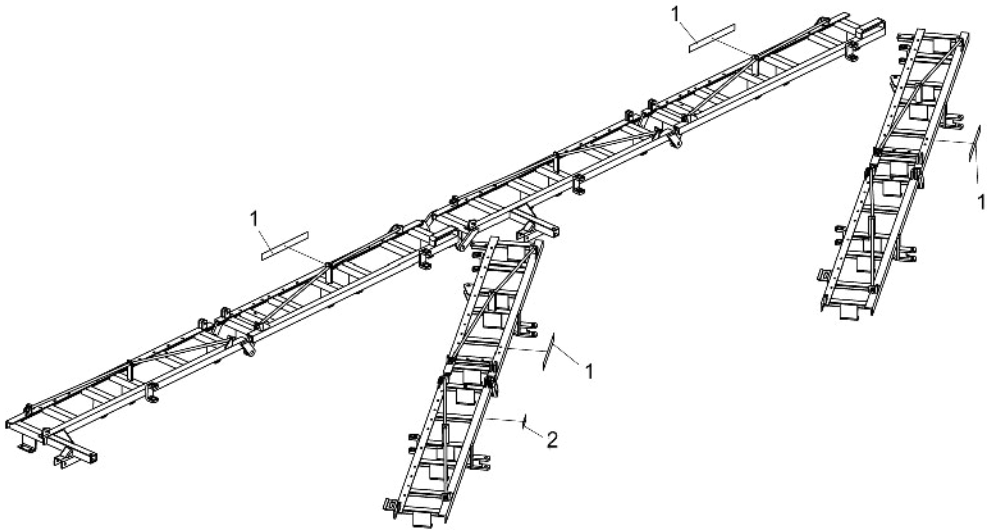

Item	Code	Product description	All
1	6020071343-8	Sticker Nvf Baldan (650 X 70Mm)	3
2	6020070886-8	Sticker Lubricate And Retighten (58 X 195Mm)	2

Item 1

Item 2

BALDAN

Avenida Baldan, 1500
Nova Matão
15.993-900
Matão/SP - Brasil
sac@baldan.com.br
export@baldan.com.br

+55 16 3221 6500
baldan.com.br