Instruction Manual

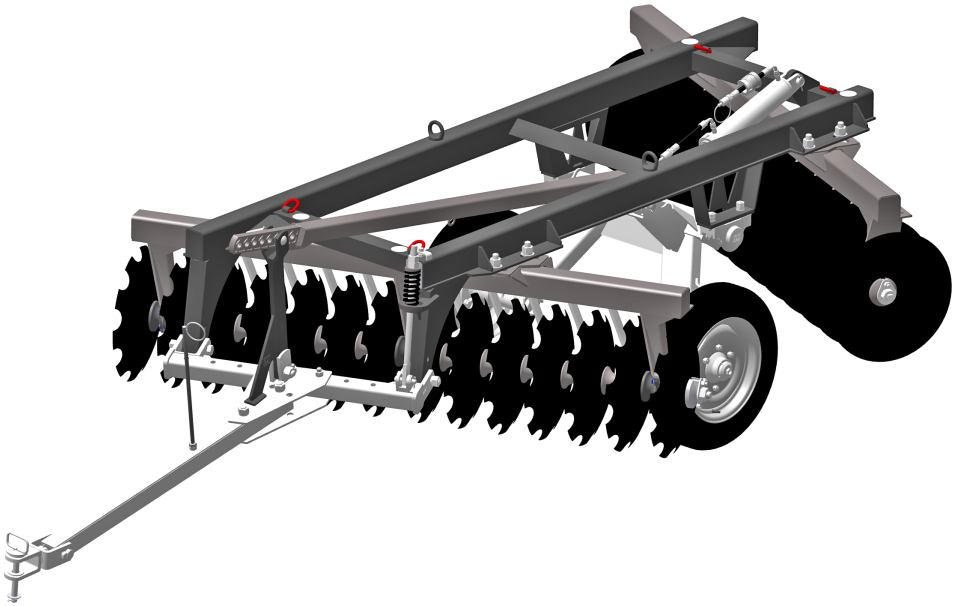

NVCR

Wheel Type Offset Levelling Disc Harrow

NVCR-E

Wheel Type Offset Levelling Disc Harrow Special

BALDAN

Presentation

We appreciate the preference and would like to congratulate you for excellent choice you just made, since you have acquired a product manufactured with **BALDAN IMPLEMENTOS AGRÍCOLAS S/A** technology**.**

This manual will guide you through the procedures required since its acquisition until operational procedures of usage, safety and maintenance.

BALDAN assures that it has delivered this implement for resale in full and in perfect conditions.

Resale was responsible for the custody and maintenance during the period in its possession, and also for the assembly, retightening, lubrication and overhaul.

During the technical delivery, dealer should guide the user regarding maintenance, safety, their obligations in eventual technical assistance, strict compliance with the warranty term and reading the instructions manual.

Any technical assistance request while in warranty must be made to the dealer from whom you have purchased it.

We reiterate the need for a careful read of the warranty certificate and compliance of all items from this manual, because by doing so you will increase the life of your device.

Instruction
Manual

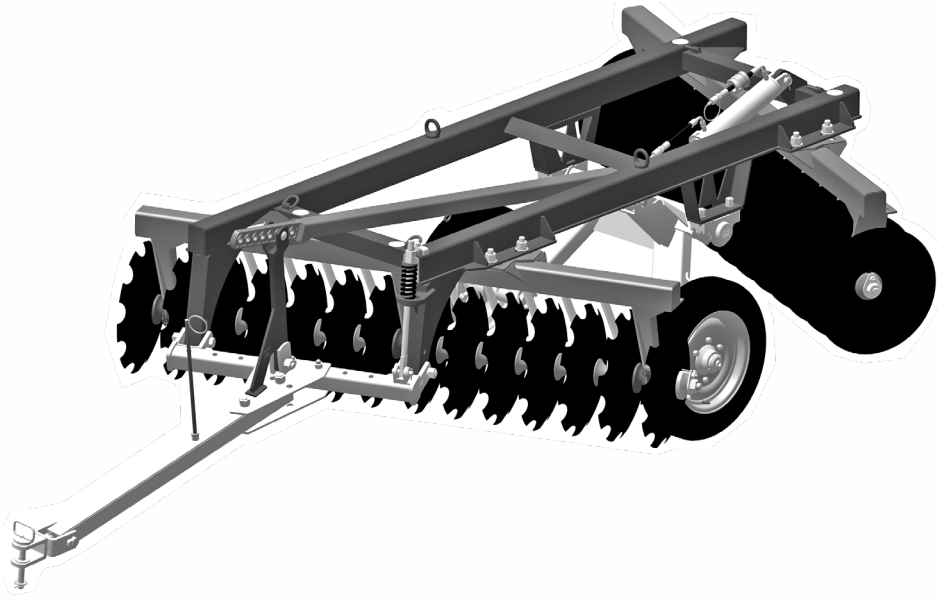

NVCR

Wheel Type Offset Levelling Disc Harrow

NVCR-E

Wheel Type Offset Levelling Disc Harrow Special

BALDAN IMPLEMENTOS AGRÍCOLAS S/A.
CNPJ: 52.311.347/0009-06
Insc. Est.: 441.016.953.110

Scan the QR Code on the identification plate of your device and access this Instruction Manual online.

BALDAN

Index

BALDAN WARRANTY **07**
GENERAL INFORMATION **08**
To the owner *08*
SAFETY RULES **09**
To the operator ..... *09 - 12*
WARNINGS ..... **13 - 14**
COMPONENTS **15**
NVCR - Wheel Type Offset Leveling Disc Harrow *15*
NVCR-E - Wheel Type Offset Leveling Disc Harrow Special *16*
DIMENSIONS **17**
NVCR - Wheel Type Offset Leveling Disc Harrow (Spacing 175 mm) *17*
NVCR - Wheel Type Offset Leveling Disc Harrow (Spacing 200 mm) *18*
NVCR-E - Wheel Type Offset Leveling Disc Harrow Special (Spacing 200 mm) *19*
SPECIFICATIONS **20**
NVCR - Wheel Type Offset Leveling Disc Harrow (Spacing 175 mm) *20*
NVCR - Wheel Type Offset Leveling Disc Harrow (Spacing 200 mm) *21*
NVCR-E - Wheel Type Offset Leveling Disc Harrow Special (Spacing 200 mm) *22*
MOUNTING **23**
Wrench Set *23*
Mounting the disc section *24*
Mounting the disc sections - NVCR 28 (175 and 200 mm) and NVCR 32 (175 and 200 mm) *25*
Mounting the disc sections - NVCR 36 (175 and 200 mm) and NVCR 40 (175 and 200 mm) *26*
Mounting the disc sections - NVCR 42 (175 and 200 mm) and NVCR 44 (175 and 200 mm) *27*
Mounting the disc sections - NVCR 48 (175 and 200 mm) and NVCR 52 (175 and 200 mm) *28*
Mounting the disc sections - NVCR 56 (175 and 200 mm) *29*
Mounting the disc sections - NVCR-E 44 (200 mm) *30*
Mounting the frames in the pillar *31*
Mounting the disc sections on the frames *32*
Mounting the wipers *33*
Mounting the wheel shaft support *34*
Mounting the tires *35*
Mounting the hydraulic cylinder *36*
Mounting the coupling head *37*
Mounting the lift stabilizer bar *38*
Mounting the hydraulic system (NVCR 28 to 56 discs / NVCR-E 44 discs) *39*
HITCH **40**
Hitching the disc harrow to the tractor drawbar (NVCR 28 to 56 discs / NVCR-E 44 discs) *40*
LEVELLING **41**
Levelling the disc harrow ..... *41 - 42*
ADJUSTMENTS **43**
Adjustment for transport *43*

Index

Adjustment of disc harrow opening *44*
Adjusting the work depth *45*
Adjusting the disc harrow displacement ..... *46 - 47*
OPERATIONS **48**
Operating recommendations ..... *48 - 49*
Direction of maneuvers *49*
How to start harrowing *50*
Harrowing from the outside to the inside *50*
Harrowing from the inside out *51*
Plots with contour lines *51*
CALCULATION **52**
Approximate hourly production ..... *52 - 53*
MAINTENANCE **54**
Tire pressure *54*
Lubrification *55*
Lubrication every 24 working hours *56*
Self-lubricating bushings *57*
Oil bearing (NVCR 28 to 56 discs) *58*
Grease bearing (NVCR 28 to 56 discs) *58*
Axial bearing (NVCR-E 44 discs) *58*
Operational maintenance *59*
Cares *60*
General cleaning ..... *60 - 61*
Conservation of the harrow ..... *61 - 62*
LIFTING **63**
Lifting points *63*
OPTIONAL **64**
Optional accessories (NVCR) *64*
Optional accessories (NVCR-E) *64*
IDENTIFICATION **65**
Identification plate *65*
Product identification *66*
NOTES **67**
CERTIFICATE **68**
Certificate of Warranty ..... *68 - 74*

▪ Baldan Warranty

BALDAN IMPLEMENTOS AGRÍCOLAS S/A ensures the dealer normal performance of the implement for a period of six (6) months as of the delivery date on the retail invoice to the first final consumer.

During this period, **BALDAN** undertakes to repair defects in material and/or of manufacture of its liability, including labor, freight and other expenses of the dealer's liability.

In the warranty period, request and replacement of eventual defective parts shall be made to the dealer of the area, who will submit the faulty piece for **BALDAN** analysis.

When this procedure is not possible and the resolving capacity of the dealer is exhausted, the dealer will request the support of **BALDAN** Technical Assistance through a specific form distributed to dealers.

After analyzing the replaced items by **BALDAN** Technical Assistance, and concluding that it is not a warranty, then the dealer will be responsible for the costs related to the replacement; as well as material expenses, travel including accommodation and meals, accessories, lubricant used and other expenses arising from the call out to Technical Assistance, and **BALDAN** company is authorized to carry the respective invoice in the name of the resale.

Any repair carried out in the product within the dealer warranty deadline will only be authorized by **BALDAN** upon previous budget presentation describing parts and workforce to be executed.

The product is excluded from this term if it is repaired or modified by representatives not belonging to the **BALDAN** dealer network, as well as the application of non-genuine parts or components to the user's product.

This warranty is void where it is found that the defect or damage is caused by improper use of the product, failure to follow instructions or inexperience of the operator.

It is agreed that this warranty does not cover tires, polyethylene tanks, cardan shafts, hydraulic components, etc., which are equipment guaranteed by their manufacturers.

Manufacturing and/or material defects, object of this warranty term, will not constitute, under any circumstances, grounds for termination of a purchase agreement, or for indemnification of any nature.

BALDAN reserves the right to change and/or perfect the technical characteristics of its products, without previous notice, and without obligation to proceed in the same way with the products previously manufactured.

▪ General Information

• To the owner

BALDAN IMPLEMENTOS AGRÍCOLAS S/A is not responsible for any damaged caused by accident due to usage, transportation, or in the improper or incorrect transportation of its implement, whether by negligence and/or inexperience of any person.

Only people with complete knowledge of the tractor and the implement should carry their transportation and operation.

BALDAN is not responsible for any damaged caused in unpredictable or unrelated situations to the normal use of the implement.

The incorrect handling of this equipment may result in severe or fatal accidents. Before starting the equipment, carefully read the instructions contained in this manual. Make sure that the person responsible for the operation is instructed as the correct and safe handling. Also make sure that the operator has read and understood the instructions manual of the product.

⚠ ATTENTION

NR-31 - SAFETY AND HEALTH AT WORK IN AGRICULTURE, LIVESTOCK FORESTRY, FOREST EXPLORATION AND AQUACULTURE.

The purpose of this Regulatory Standard is to establish the precepts to be observed in the organization and in the work environment, in a manner compatible with the planning and development of agriculture, livestock, forestry and aquaculture activities with the safety and health and environment work environment.

MR. OWNER OR OPERATOR OF THE EQUIPMENT.
Read and carefully comply with provisions of NR-31.

For more information, refer to the site and read in full NR-31.
http://portal.mte.gov.br/legislacao/normas-regulamentadoras-1.htm

▪ Safety Rules

• To the operator

THIS SYMBOL INDICATES IMPORTANT SAFETY WARNING. IN THIS MANUAL, WHENEVER YOU FIND IT, READ THE FOLLOWING MESSAGE CAREFULLY AND PAY ATTENTION TO THE POSSIBILITY OF PERSONAL ACCIDENTS.

ATTENTION

Carefully read the instructions manual to learn about the recommended safety practices.

ATTENTION

Only start to operate the tractor when you are properly seated and with the seat belt locked.

ATTENTION

Do not transport people or equipment on the tractor.

ATTENTION

There are risks of severe injuries due to tipping when working in sloped terrains. Do not over speed.

ATTENTION

Do not work with the tractor if the front has insufficient ballast to the rear equipment. Should there be a trend to lift, add weights or ballasts to the front or the front wheels.

ATTENTION

Before performing any maintenance in your equipment, make sure it is properly stopped. Avoid being run over.

ATTENTION

Be careful when handling the NVCR/NVCR-E support leg, as there is a risk of accidents.

▪ Safety Rules

ATTENTION

FOLLOW ALL RECOMMENDATIONS, WARNINGS AND SAFE PRACTICES RECOMMENDED IN THIS MANUAL, UNDERSTAND THE IMPORTANCE OF YOUR SAFETY. ACCIDENTS MAY LEAD TO DISABILITY OR INCLUDING DEATH. REMEMBER, ACCIDENTS CAN BE AVOIDED!

ATTENTION

Do not make adjustments with the NVCR/NVCR-E in operation. When doing any service on the NVCR/NVCR-E, turn off the tractor first. Use appropriate tools.

ATTENTION

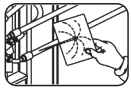

When looking for possible leaks in hoses, use a cardboard or wood, never use your hands. Avoid fluid incision into the skin.

ATTENTION

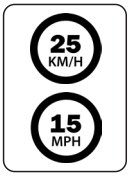

When transporting the NVCR, do not exceed the speed of 25Km/h or 15 MPH, avoiding risks of damages and accidents.

ATTENTION

When working with the NVCR, do not exceed the speed of 12Km/h or 7 MPH, avoiding risk of damages and accidents.

ATTENTION

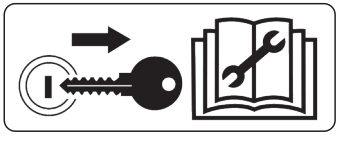

Remove the ignition key before performing any maintenance on the NVCR/NVCR-E. Protect yourself from possible injury or death caused by an unforeseen NVCR/NVCR-E start up.
If the NVCR/NVCR-E is not properly engaged, do not start the tractor.

ATTENTION

Hydraulic oil works under pressure and may cause serious injuries if there are any leakages.
Periodically check hoses for conservation. If there are any sign of leakage, replace them immediately. Before connecting or disconnecting hydraulic hoses, relief system pressure by activating the command with the tractor power switched off.

Safety Rules

ATTENTION

Always maintain places of access and work free of residues such as oil or grease to prevent accidents.

ATTENTION

Before commencing work or transportation to NVCR/NVCR-E, check for any nearby persons or obstructions.

ATTENTION

Avoid heating parts near the fluid lines.
Heating may generatee fragility in the material, rupture and exit of the pressurized fluid, causing burns and injuries

ATTENTION

Keep the joint area free while the NVCR/NVCR-E is in operation.
In closed curves, prevent tractor wheels from touching the head.

ATTENTION

Never weld the tire-mounted wheel, the heat may cause increased air pressure and cause the tire to burst.
When filling the tire, position yourself besides the tire, never in front of it. To inflate a tire, always use a containment device (inflation cage).

ATTENTION

Always stay away from the active elements of the NVCR/NVCR-E (discs), they are sharp and can cause accidents.
When performing any service in the discs, wear safety gloves.

ATTENTION

Disposing of waste improperly affects the environment and the environment, as it will pollute rivers, canals or the soil. Inform yourself about the proper way of recycling or disposing residues.

PROTECT THE ENVIRONMENT!

▪ Safety Rules

• PPE Equipment

ATTENTION | **DO NOT WORK WITH THE NVCR WITHOUT WEARING PPE (SAFETY EQUIPMENT). IGNORING THIS WARNING MAY CAUSE DAMAGES TO HEALTH, SEVERE ACCIDENTS OR DEATH.**

When performing certain procedures with the **NVCR/NVCR-E**, wear the following Safety Equipment (PPE):

IMPORTANT

Safety practice must be performed in all stages of working with the NVCR/NVCR-E, thus avoiding accidents such as impact of objects, fall, noise, cuts and ergonomics, in other words, the person responsible for operating the NVCR/NVCR-E is subject to internal and external bodily damage.

OBSERVATION | **All PPEs (Safety Equipment) should have certificate of authenticity.**

▪ Warnings

⚠ When operating with the NVCR/NVCR-E, do not allow people to stay too close or on top of it.

⚠ When servicing the machine, wear PPE.

⚠ Before connecting or disconnecting hydraulic hoses, relieve system pressure by activating the control with the tractor off.

⚠ Periodically check the condition of the hydraulic hoses. If there is evidence of oil leakage, replace the hose immediately as the oil works under high pressure and can cause serious accidents.

⚠ Do not wear loose clothing, as they get caught in the NVCR/NVCR-E.

⚠ When starting the tractor engine, be properly seated in the operator's seat and aware of the full knowledge of the correct and safe handling of both the tractor and the NVCR/NVCR-E. Always put the shift lever in the neutral position, disconnect the control gear from the PTO and put the hydraulic controls in the neutral position.

⚠ Do not start the tractor engine indoors without adequate ventilation as exhaust fumes are harmful to health.

⚠ When maneuvering the tractor to engage the NVCR/NVCR-E, make sure you have the necessary space and that there is no one very close, always do the maneuvers at idle and be prepared to brake in an emergency.

⚠ Do not make adjustments while the NVCR/NVCR-E is in operation.

⚠ When working on slopes, be careful to always maintain the necessary stability. In the event of imbalance, decrease acceleration, turn the wheels to the side of the slope and never raise the NVCR/NVCR-E.

⚠ Always drive the tractor at safety compatible speeds, especially when working on rough or sloping terrain, always keep the tractor hitched.

⚠ When driving the tractor on roads, keep the brake pedals interconnected.

⚠ Do not work with the tractor with a light rear. If the rear tends to lift, add more weights to the rear wheels.

⚠ When leaving the tractor, shift to neutral and set the parking brake. Never leave the NVCR engaged to the tractor with the hydraulic system in the raised position.

⚠ Any and all maintenance on the NVCR/NVCR-E must be carried out while it is parked and the tractor turned off.

⚠ Do not drive on highways, especially at night. Use warning signs all the way.

⚠ If there is a need to travel with the NVCR/NVCR-E on highways, consult traffic agencies.

⚠ Do not allow the NVCR/NVCR-E to be used by people who have not been trained, that is, who do not know how to operate it properly.

▪ Warnings

⚠ Do not transport or work with the NVCR/NVCR-E close to obstacles, rivers or streams.

⚠ Transporting people on self-propelled machines and implements is prohibited.

⚠ Changes to the original characteristics of the NVCR/NVCR-E are not authorized, as they may alter safety, operation, and affect the useful life.

⚠ Read carefully all the safety information in this manual and on the NVCR/NVCR-E.

⚠ Read or explain all procedures in this manual to an operator who cannot read.

⚠ Always check that the NVCR is in perfect condition. In the event of any irregularity that may interfere with the NVCR's operation, provide proper maintenance before any work or transport.

⚠ Maintenance and especially inspection in risk areas of the NVCR/NVCR-E, must be carried out only by a trained or qualified worker, observing all safety guidelines. Before starting maintenance, disconnect all drive systems from the NVCR/NVCR-E.

⚠ Periodically check all components of the NVCR/NVCR-E before using it.

⚠ According to the equipment used and the working conditions in the country or in areas of maintenance, precautions are necessary. Baldan has no direct control over precautions, so it is the responsibility of the owner to put the safety procedures into practice while working with the NVCR/NVCR-E.

⚠ Check the minimum tractor power recommended for each NVCR/NVCR-E model. Only use tractors with power and ballast compatible with the load and terrain topography.

⚠ When transporting the NVCR/NVCR-E, travel at speeds compatible with the terrain and never exceeding 16 km/h, as this reduces maintenance and consequently increases the useful life of the NVCR/NVCR-E.

⚠ Acoholic beverages or some medications may cause loss of reflexes and change the operator's physical condition. Therefore, never operate this NVCR/NVCR-E under the use of these substances.

⚠ Read or explain all procedures in this manual to a user who cannot read.

If in doubt, contact After Sales.
Telephone: 0800-152577 / E-mail: posvenda@baldan.com.br

▪ Components

• NVCR - Wheel Type Offset Leveling Disc Harrow

1. Pillar
2. Front frame
3. Rear frame
4. Hitch header
5. Hose support
6. Stabilizer bar support
7. Stabilizer rod
8. Stabilizer bar
9. Articulation support hub
10. Tire articulation shaft
11. Tires
12. Discs
13. Bearing
14. Hydraulic cylinder
15. Hydraulic hoses
16. Wranches

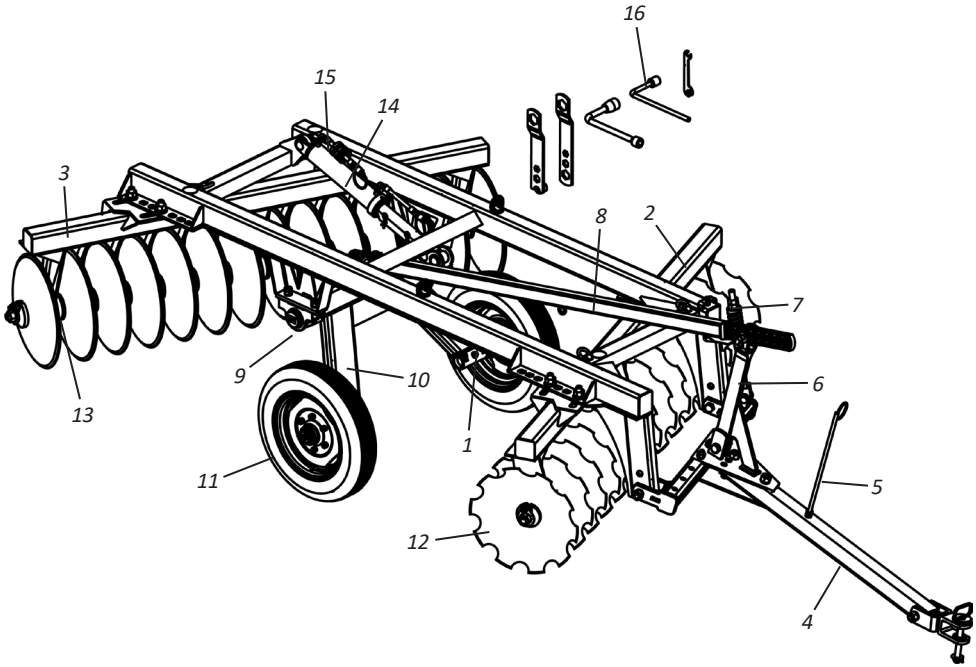

▪ Components

• NVCR-E - Wheel Type Offset Leveling Disc Harrow Special

1. Pillar
2. Front frame
3. Rear frame
4. Hitch header
5. Hose support
6. Stabilizer bar support
7. Stabilizer rod
8. Stabilizer bar
9. Articulation support hub
10. Tire articulation shaft
11. Tires
12. Discs
13. Bearing
14. Hydraulic cylinder
15. Hydraulic hoses
16. Wranches

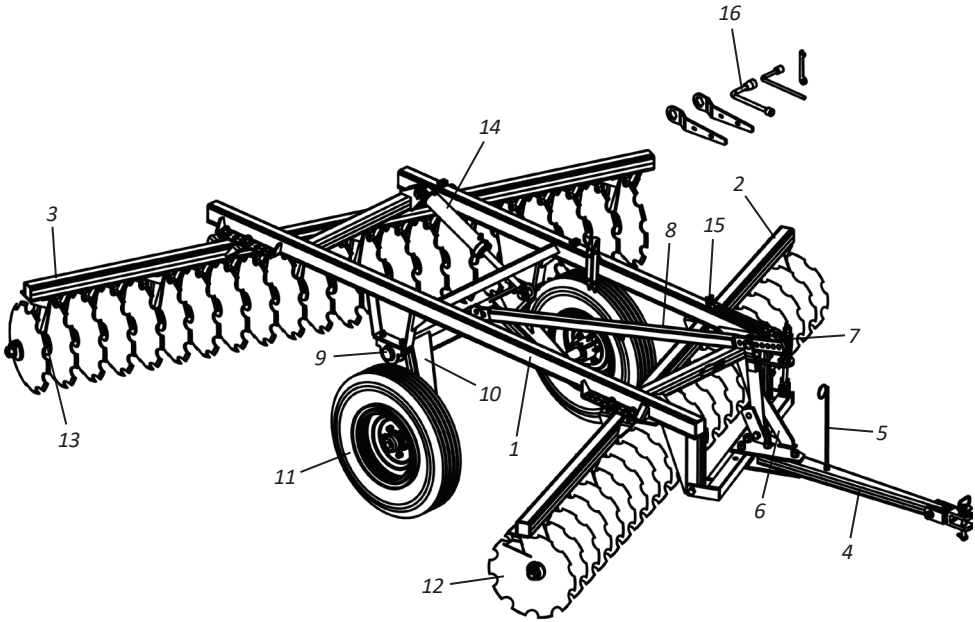

▪ Dimensions

• NVCR - Wheel Type Offset Leveling Disc Harrow (Spacing 175 mm)

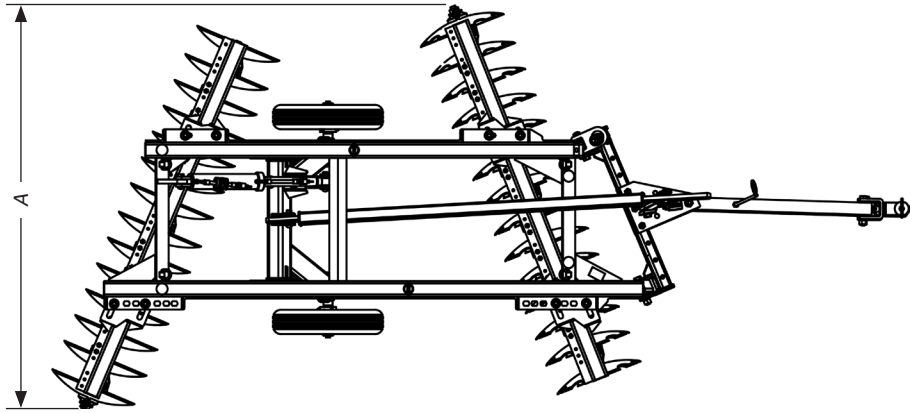

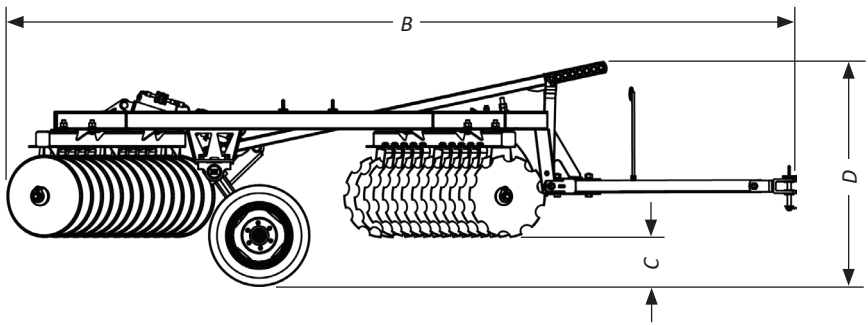

Model	Nr of Discs	Discs Spacing (mm)	Measure A (mm)	Measure B (mm)	Measure C (mm)	Measure D (mm)
NVCR	28	175	2640	5363	334	1434
NVCR	32	175	2866	5475	334	1434
NVCR	36	175	3202	5535	334	1434
NVCR	40	175	3580	5621	334	1434
NVCR	42	175	3739	5633	334	1434
NVCR	44	175	3891	5708	334	1434
NVCR	48	175	4277	5964	382	1574
NVCR	52	175	4625	6031	408	1600
NVCR	56	175	4973	6081	417	1611

▪ Dimensions

• **NVCR - Wheel Type Offset Leveling Disc Harrow (Spacing 200 mm)**

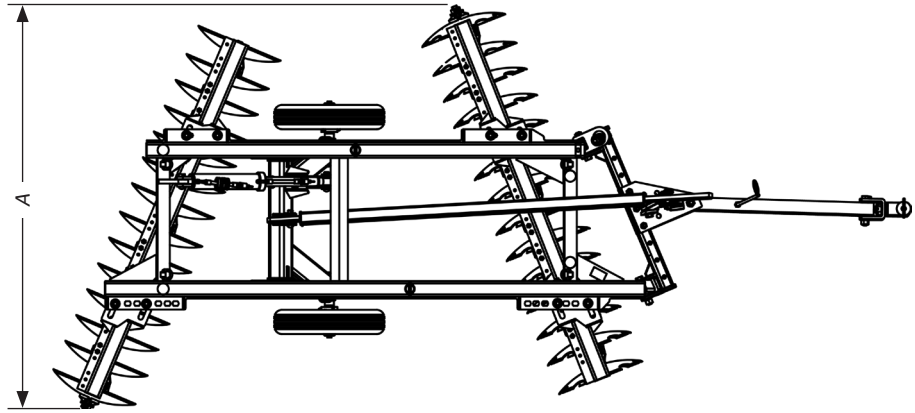

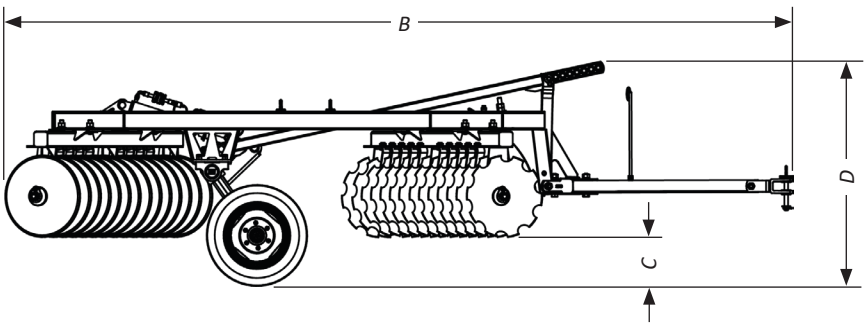

Model	Nr of Discs	Discs Spacing (mm)	Measure A (mm)	Measure B (mm)	Measure C (mm)	Measure D (mm)
NVCR	28	200	2819	5428	334	1434
NVCR	32	200	3175	5505	334	1434
NVCR	36	200	3557	5583	334	1434
NVCR	40	200	3936	5679	334	1434
NVCR	42	200	4193	5943	389	1581
NVCR	44	200	4388	6007	389	1581
NVCR	48	200	4705	6080	389	1581
NVCR	52	200	5136	6149	389	1581
NVCR	56	200	5503	6219	403	1581

▪ Dimensions

• NVCR-E - Wheel Type Offset Leveling Disc Harrow Special (Spacing 200 mm)

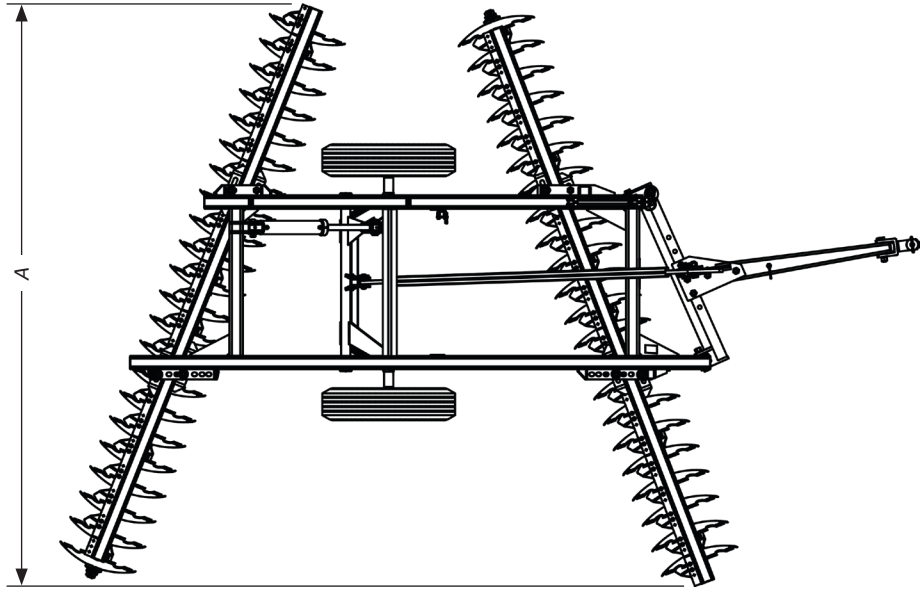

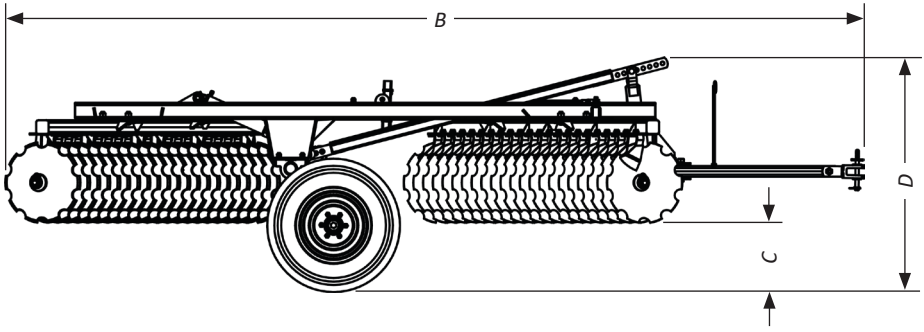

Model	Nr of Discs	Discs Spacing (mm)	Measure A (mm)	Measure B (mm)	Measure C (mm)	Measure D (mm)
NVCR-E	44	200	4379	6471	564	1746

▪ Specifications

• NVCR - Wheel Type Offset Leveling Disc Harrow (Spacing 175 mm)

Model	Disc Spacing	Nr of Discs	Working Width (mm)	Diameter of Discs (ø)	Approximate Weight (Kg)		Tractor Power (HP)	Tires
					20”	22”		
NVCR	175 mm	28	2350	20” - 22”	1183	1219	73 à 79	600x16
		32	2700	20” - 22”	1279	1320	83 à 89	600x16
		36	3050	20” - 22”	1352	1399	93 à 100	600x16
		40	3420	20” - 22”	1480	1532	104 à 122	600x16
		42	3600	20” - 22”	1529	1583	110 à 120	600x16
		44	3760	20” - 22”	1558	1615	115 à 120	600x16
		48	4100	20” - 22”	1752	1814	125 à 135	750x16
		52	4450	20” - 22”	1851	1918	135 à 145	750x16
		56	4800	20” - 22”	1944	2017	145 à 150	750x16

Shaft Diameter (ø) ..... 1.1/4”
Working depth ..... 50 - 150 mm
Wheels set ..... Simples

Baldan reserves the right to change and/or perfect the technical characteristics of its products, without previous notice, and without obligation to proceed in the same way with the products previously manufactured. Technical specifications are approximate and informed under normal work conditions.

INTENDED USE OF THE NVCR

- **NVCR** was developed for clod breaking, soil leveling, incorporating herbicides, and even for reduced preparation.
- The **NVCR** should only be driven and operated by a properly instructed operator.

UNAUTHORIZED USE OF THE NVCR

- To avoid damage, serious accident or death, DO NOT transport people on any part of **NVCR**.
- It is NOT permitted to use the **NVCR** to couple, tow or push other attachments or accessories.
- The **NVCR** should not be used by an inexperienced operator who does not know all the driving, command and operation techniques.

▪ Specifications

• NVCR - Wheel Type Offset Leveling Disc Harrow (Spacing 200 mm)

Model	Disc Spacing	Nr of Discs	Working Width (mm)	Diameter of Discs (ø)	Approximate Weight (Kg)		Tractor Power (HP)	Tires
					20”	22”		
NVCR	200 mm	28	2700	20” - 22”	1243	1279	75 à 85	600x16
		32	3100	20” - 22”	1321	1362	85 à 95	600x16
		36	3500	20” - 22”	1447	1494	100 à 105	600x16
		40	3900	20” - 22”	1535	1587	110 à 115	600x16
		42	4100	20” - 22”	1650	1704	115 à 120	600x16
		44	4300	20” - 22”	1753	1810	125 à 135	600x16
		48	4700	20” - 22”	1864	1926	135 à 140	750x16
		52	5100	20” - 22”	1946	2013	140 à 153	750x16
		56	5500	20” - 22”	2074	2147	153 à 167	750x16

Shaft Diameter (ø) ..... 1.1/4”
Working depth ..... 50 - 150 mm
Wheels set ..... Simples

Baldan reserves the right to change and/or perfect the technical characteristics of its products, without previous notice, and without obligation to proceed in the same way with the products previously manufactured. Technical specifications are approximate and informed under normal work conditions.

INTENDED USE OF THE NVCR

- **NVCR** was developed for clod breaking, soil leveling, incorporating herbicides, and even for reduced preparation.
- The **NVCR** should only be driven and operated by a properly instructed operator.

UNAUTHORIZED USE OF THE NVCR

- To avoid damage, serious accident or death, DO NOT transport people on any part of **NVCR**.
- It is NOT permitted to use the **NVCR** to couple, tow or push other attachments or accessories.
- The **NVCR** should not be used by an inexperienced operator who does not know all the driving, command and operation techniques.

▪ Specifications

• NVCR-E - Wheel Type Offset Leveling Disc Harrow Special (Spacing 200 mm)

Model	Disc Spacing	Nr of Discs	Working Width (mm)	Diameter of Discs (ø)	Approximate Weight (Kg)	Tractor Power (HP)	Tires
					24”		
NVCR-E	**200 mm**	44	4300	24”	2318	118 à 135	750x16

Shaft Diameter (ø) ..... 1.1/2”
Working depth ..... 50 - 150 mm
Wheels set ..... Simples

Baldan reserves the right to change and/or perfect the technical characteristics of its products, without previous notice, and without obligation to proceed in the same way with the products previously manufactured. Technical specifications are approximate and informed under normal work conditions.

INTENDED USE OF THE NVCR-E

- **NVCR-E** was developed for clod breaking, soil leveling, incorporating herbicides, and even for reduced preparation.
- The **NVCR-E** should only be driven and operated by a properly instructed operator.

UNAUTHORIZED USE OF THE NVCR-E

- To avoid damage, serious accident or death, DO NOT transport people on any part of **NVCR-E**.
- It is NOT permitted to use the **NVCR-E** to couple, tow or push other attachments or accessories.
- The **NVCR-E** should not be used by an inexperienced operator who does not know all the driving, command and operation techniques.

▪ Mounting

The **NVCR/NVCR-E** leaves the factory disassembled. To assemble it, follow the instructions below:

⚠ The assembly of the **NVCR/NVCR-E** must be carried out by the reseller, by people who are trained and qualified for this work.

⚠ Before starting the assembling the **NVCR/NVCR-E**, find an ideal place where you can easily identify parts and assemble them.

⚠ Do not wear loose clothing as it may get caught on the **NVCR/NVCR-E**.

⚠ Use PPE (Safety Equipment).

• Wrench set

When assembling, disassembling, or servicing the **NVCR/NVCR-E**, use the wrench set that come with the disc harrow. The Wrench Set consists of:

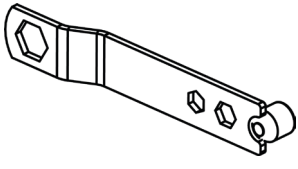

WRENCH FOR 1.1/4" - 3/4" AND 5/8" HEX NUT NVCR

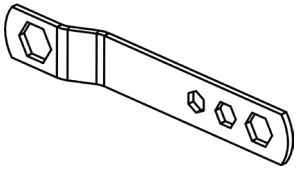

WRENCH FOR 1.1/4" - 1" - 3/4" AND 5/8" HEX NUT NVCR

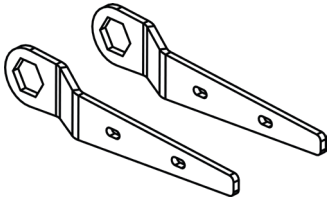

WRENCH FOR 1.1/2" HEX NUT NVCR-E

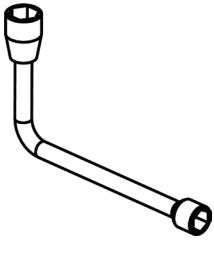

WRENCH FOR 3/4" AND 1" HEX NUT NVCR/NVCR-E

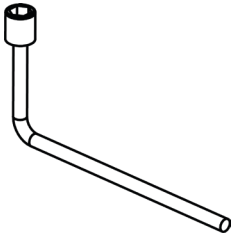

WRENCH FOR 5/8" HEX NUT NVCR/NVCR-E

WRENCH FOR 3/8" AND 1/2" HEX NUT NVCR/NVCR-E

⚠ **ATTENTION** | **If a wrench is lost or broken, immediately acquire another one. Always use original Baldan wrenches.**

▪ Mounting

• Mounting the disc section

When you start mounting the **NVCR/NVCR-E**, always start with the disc set, proceeding as follows:

01 - Place on the shaft (1), the concave thrust washer (2), lock (3), nut (4), fastening it with the lock washer (5) and nut (7).

02 - Then place the diss (8), bearing (9), another diss (8), separator spool (10) on the shaft (1), and so on.

03 - When the assembly is complete with all discs, bearings, spools, place the convex thrust washer (11), lock (12), nut (13), tightening with the wrench until the set is fully mounted.

04 - Then, shim the disc assembly and tighten the nut (13) by impacts. When almost reaching full tightening, tighten the lock (12) with the convex washer (11), always tightening the nut until the hole matches, fastening it with the screw (14), lock washer (15), and nut (16).

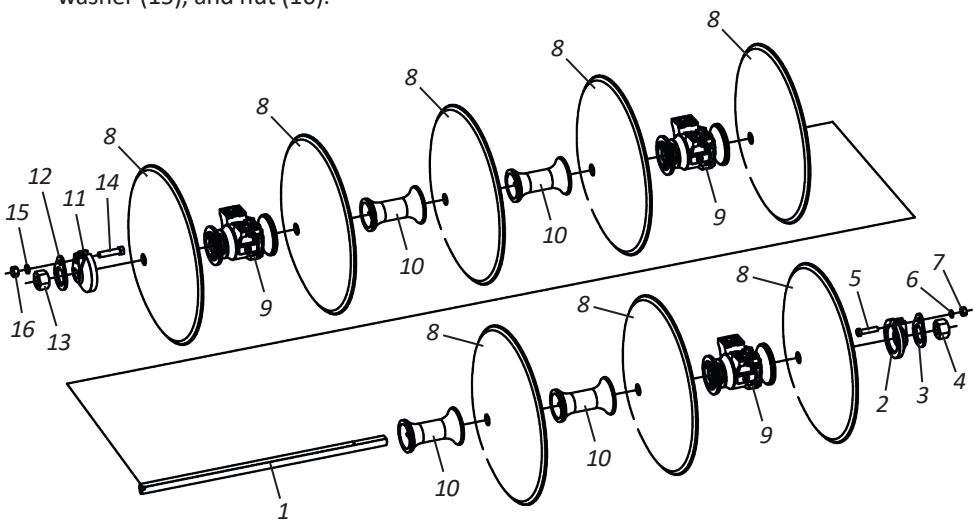

⚠ ATTENTION

During the first week of using the NVCR/NVCR-E, daily retighten all the bolts and nuts on the disc sections, then retighten them periodically.

IMPORTANT | **Check the right side of the separator spools and bearings according to disc concavity.**

Mounting

• Mounting the disc sections (NVCR) - Part I

Check below the mounting of the **NVCR** disc sections.

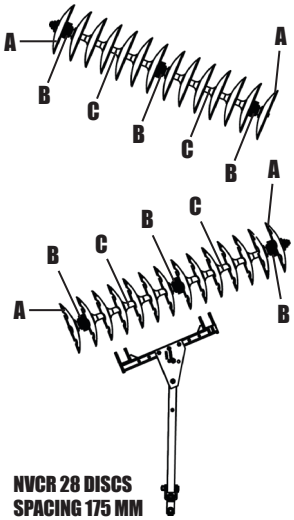

NVCR 28 DISCS
SPACING 175 MM

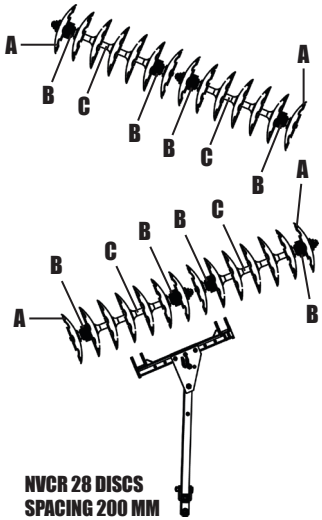

NVCR 28 DISCS
SPACING 200 MM

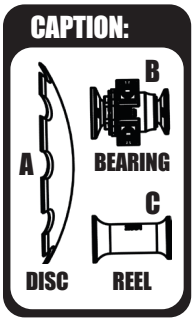

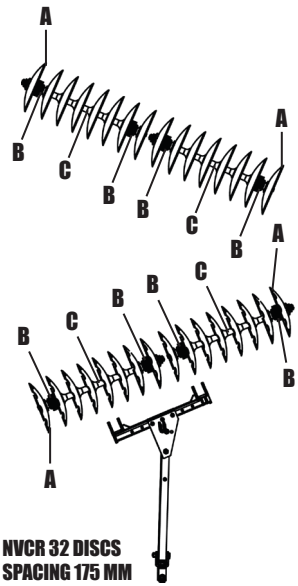

NVCR 32 DISCS
SPACING 175 MM

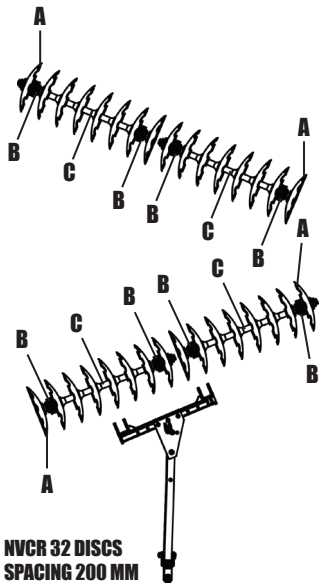

NVCR 32 DISCS
SPACING 200 MM

▪ Mounting

• Mounting the disc sections (NVCR) - Part II

Check below the mounting of the **NVCR** disc sections.

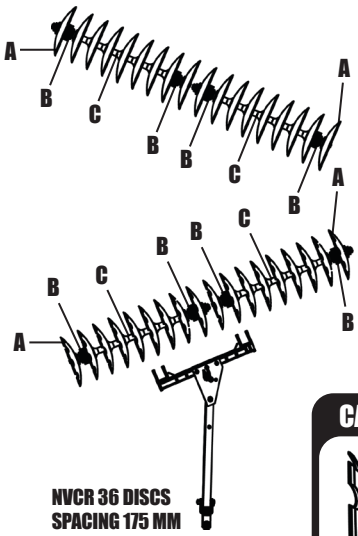

NVCR 36 DISCS
SPACING 175 MM

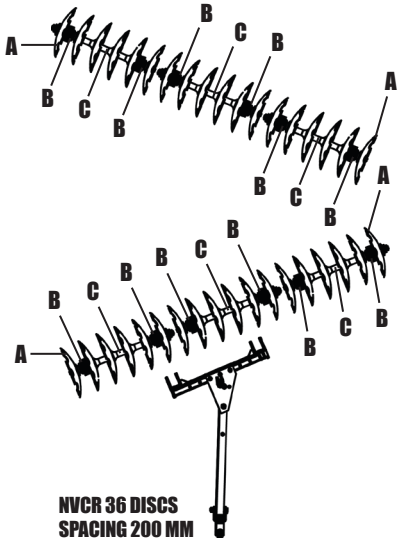

NVCR 36 DISCS
SPACING 200 MM

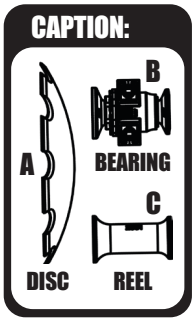

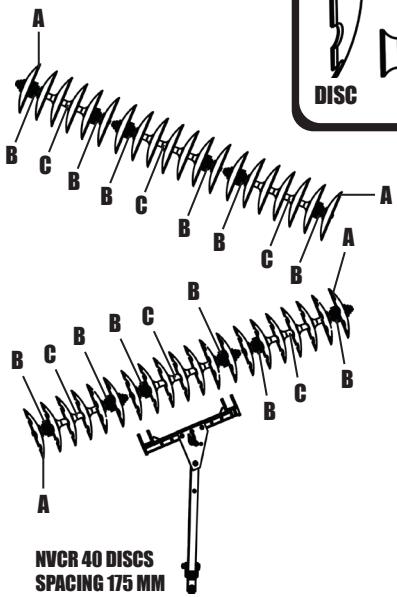

NVCR 40 DISCS
SPACING 175 MM

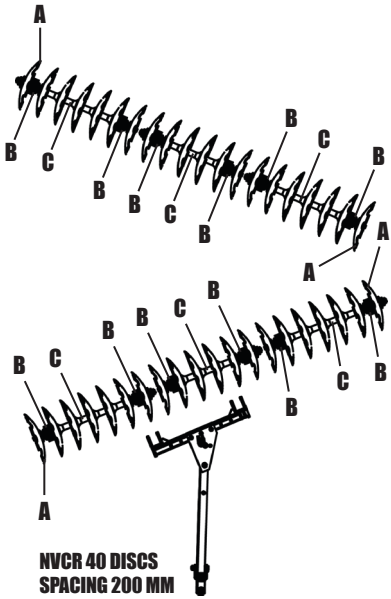

NVCR 40 DISCS
SPACING 200 MM

▪ Mounting

• Mounting the disc sections (NVCR) - Part III

Check below the mounting of the **NVCR** disc sections.

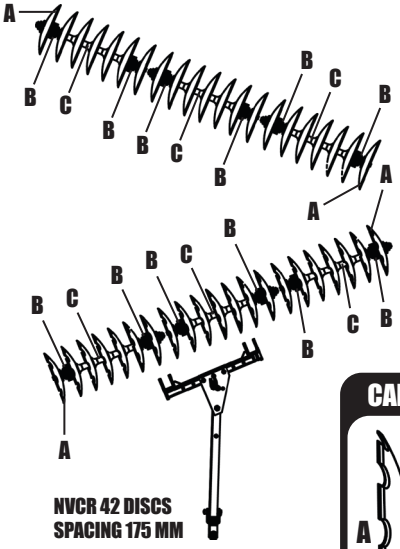

NVCR 42 DISCS
SPACING 175 MM

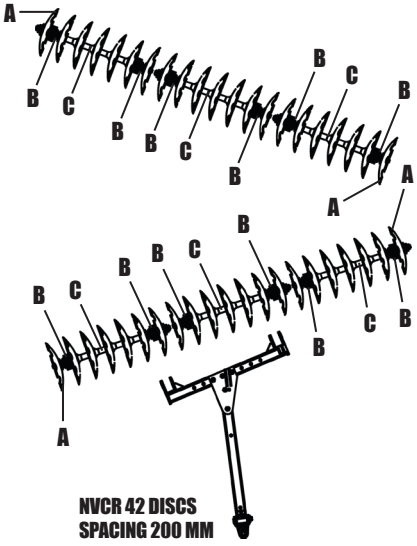

NVCR 42 DISCS
SPACING 200 MM

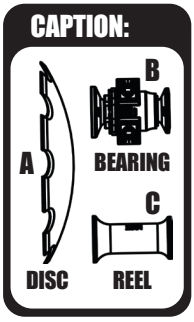

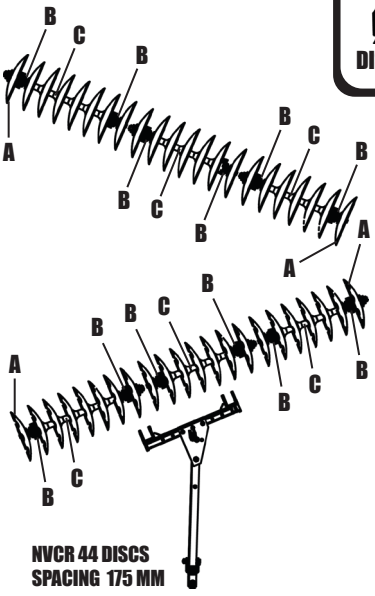

NVCR 44 DISCS
SPACING 175 MM

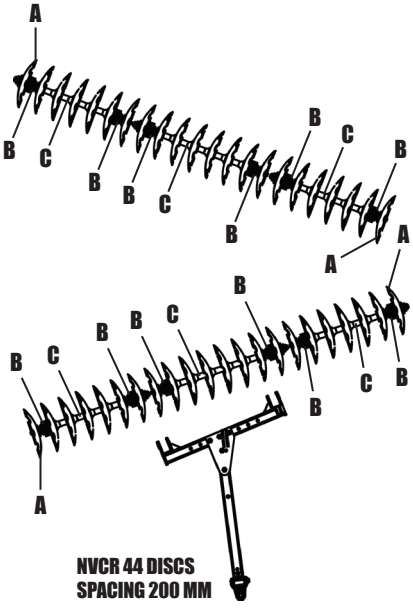

NVCR 44 DISCS
SPACING 200 MM

▪ Mounting

• Mounting the disc sections (NVCR) - Part IV

Check below the mounting of the **NVCR** disc sections.

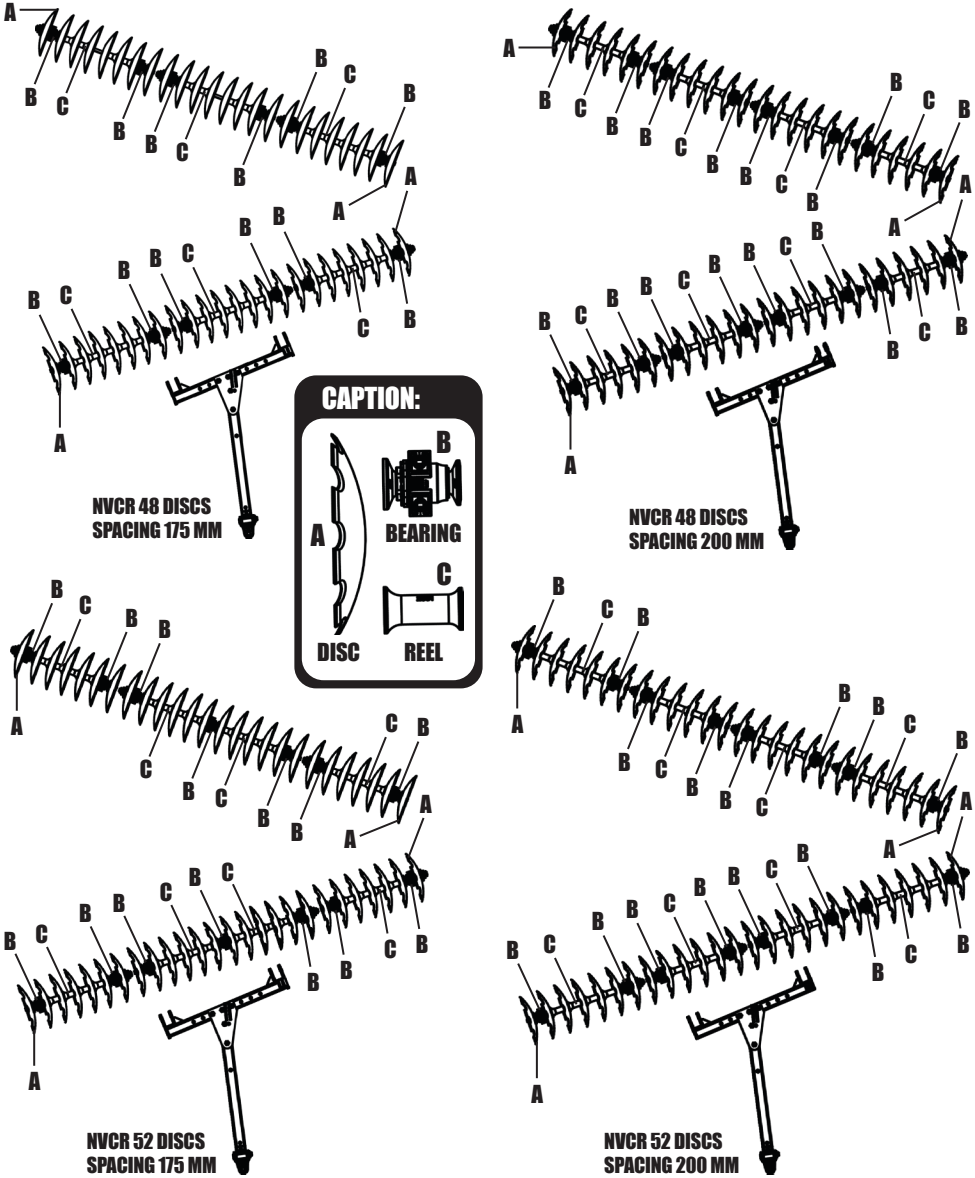

▪ Mounting

• Mounting the disc sections (NVCR) - Part V

Check below the mounting of the **NVCR** disc sections.

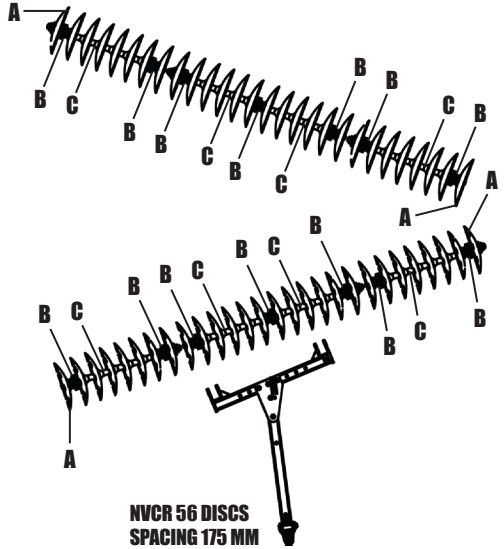

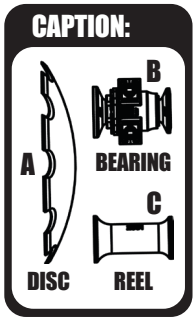

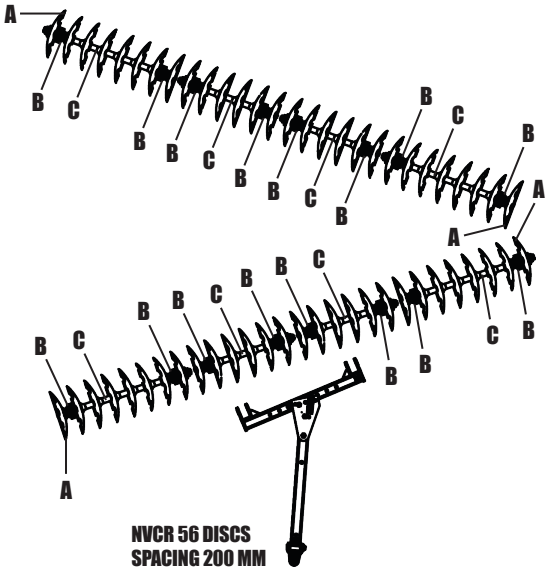

▪ Mounting

• Mounting the disc sections (NVCR-E)

Check below the mounting of the **NVCR-E** disc sections.

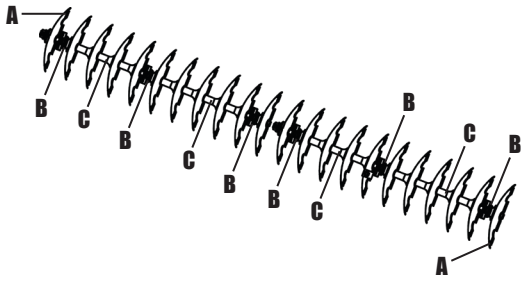

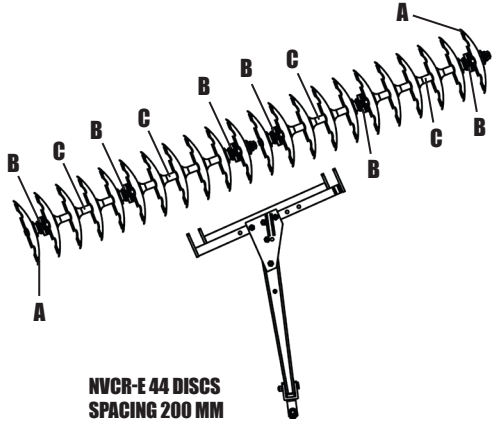

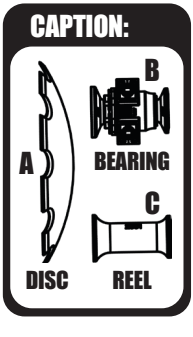

▪ Mounting

• Mounting the frames in the pillar

To fasten the front and rear frames to the pillar, proceed as follows:

01 - Place the front (1) and rear (2) frames in a flat, clean place.

02 - Then, place the pillar (3) on the front (1) and rear (2) frames, fastening them using screws (4), locks (5), plain washers (6), lock washers (7), and nuts (8).

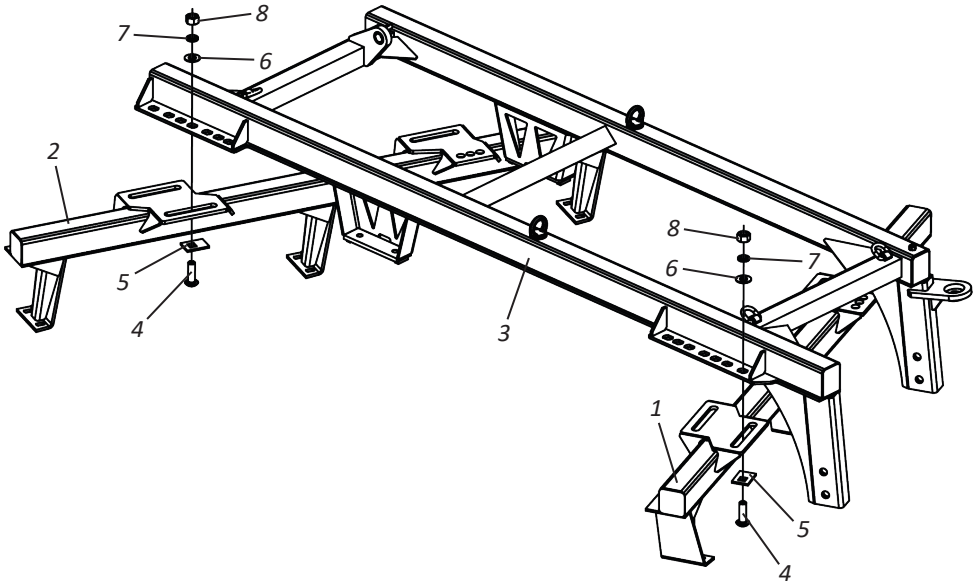

ATTENTION | **To lift the pillar (3), follow the instructions on page 63. Ignoring this warning may cause serious accident or death.**

▪ Mounting

• Mounting the disc sections on the frames

After fastening the front and rear frames to the pillar, fasten the disc sections proceeding as follows:

01 - Lift the front or back part of the disc harrow and place the disc section (3) in line and match the holes of the shoes (4) with those of the bearings and fastening it with the screws (5), flat washers (6), nuts, and locknuts (7).

02 - Then lift the other side of the disc harrow and repeat the operation checking the concavity of the discs from one section to the other, which should be opposing.

03 - When finishing the assembly, check that the shoes (4) are facing the concavity of the discs.

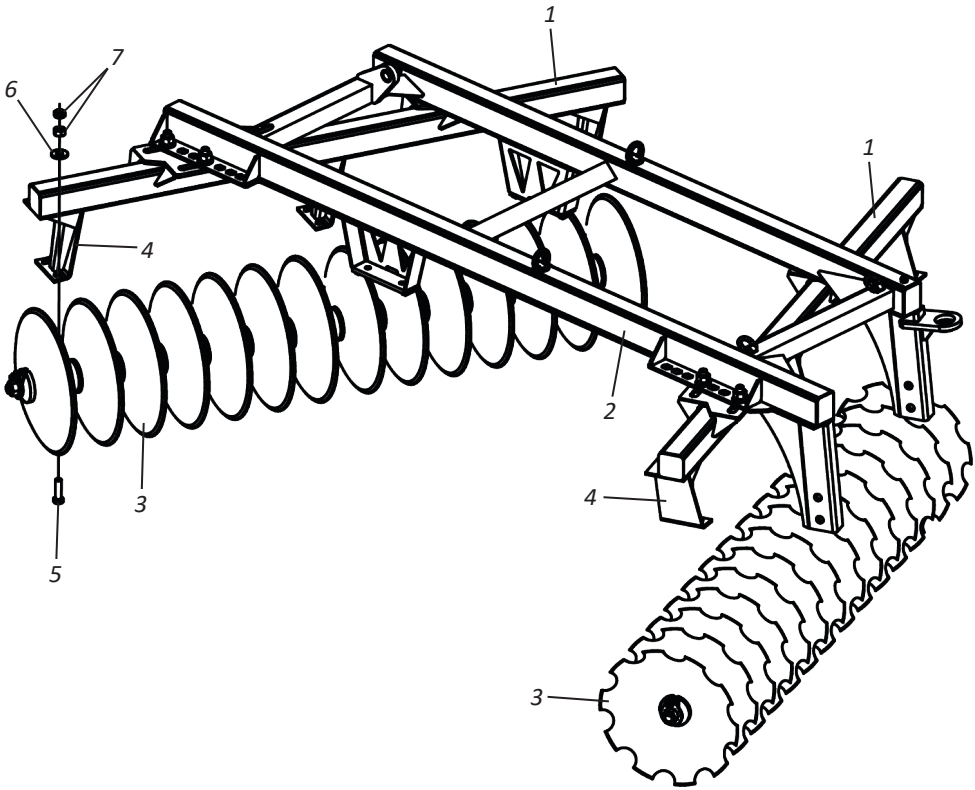

ATTENTION **When assembling the disc sections in the frames, note that the shoes in frames must face the concavity of the discs.**

▪ Mounting

• Mounting the wipers

After mounting the disc sections on the frames, fasten the wipers, proceeding as follows:

01 - Couple the front and rear wipers (1) into the frames (2) fastening through the screws (3), lock washers (4), and nuts (5).

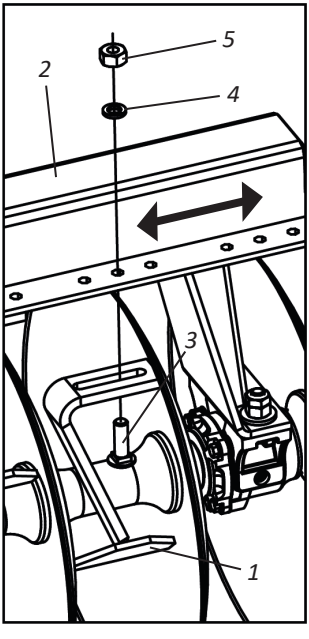

NVCR 28 TO 56 DISCS SPACING 175 MM

NVCR 28 TO 56 DISCS SPACING 200 MM

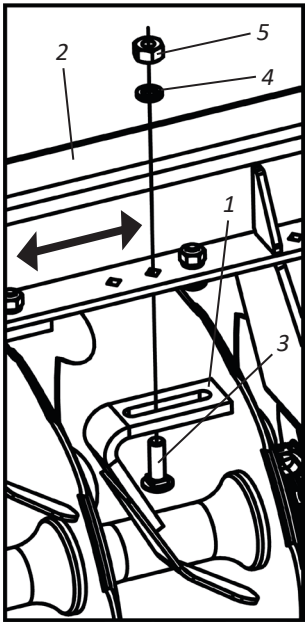

NVCR-E 44 DISCS SPACING 200 MM

⚠ ATTENTION **The wipers (1) allow adjustment to bring them closer or further from the discs. When assembling the wipers (1), they should be 0.5 to 1.0 cm away from the discs.**

▪ Mounting

• Mounting the wheel shaft support

After assembling the wipers, fasten the wheel shaft support proceeding as follows:

01 - Couple the hubs (1) on the wheel articulation shaft (2), then fasten the hubs (1) to the pillar (3) using the screws (4), lock washers (5), nuts and locknuts (6).

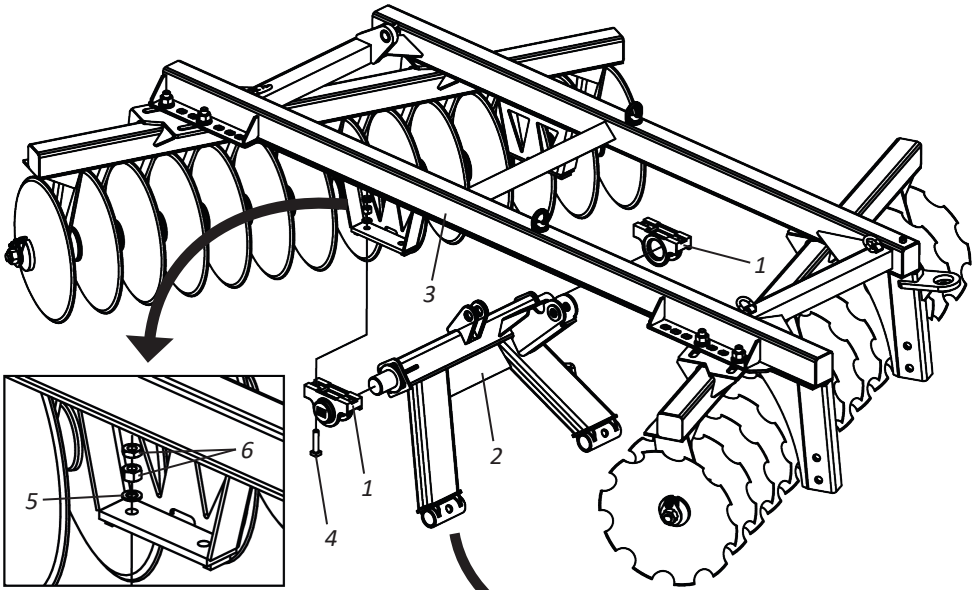

02 - Then, attach the wheel shaft (7) to the wheel articulation shaft (2) through the bushing (8) of the screw (9) and nut (10).

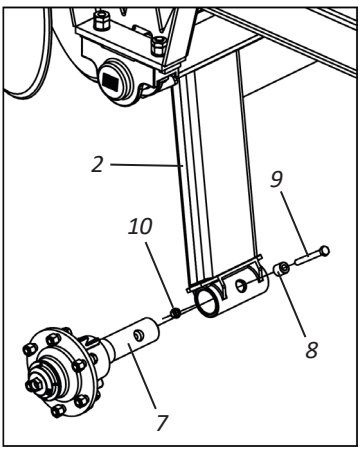

▪ Mounting

• Mounting the tires

After assembling the wheel shaft support, fasten the tires proceeding as follows:

01 - Couple the tires (1) to the wheel support (2), fastening through the screws (3), and nuts (4).

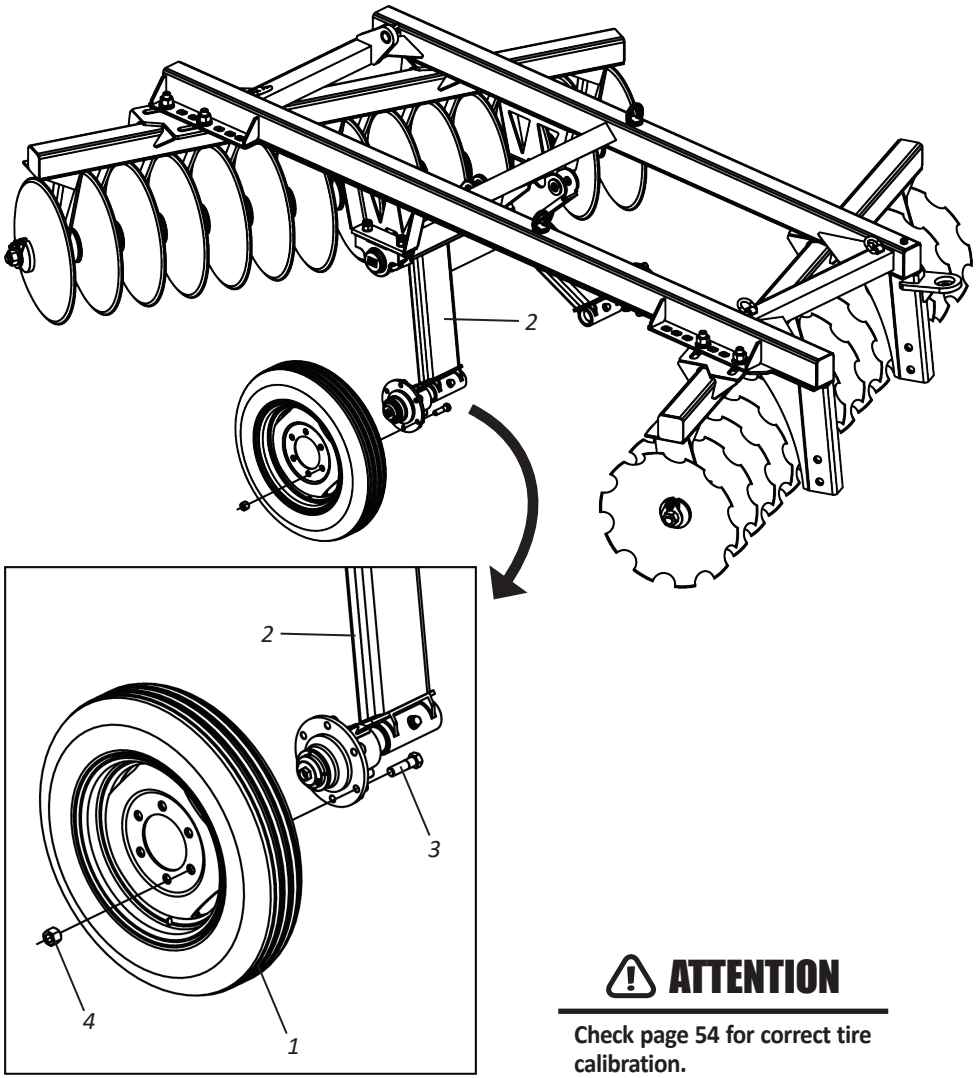

⚠ ATTENTION

Check page 54 for correct tire calibration.

▪ Mounting

• Mounting the hydraulic cylinder

After mounting the tires, fasten the hydraulic cylinder proceeding as follows:

01 - Then, couple the hydraulic cylinder base (1) to the pillar (2) through the pin (3) and cotter pin (4).

02 - Then, couple the hydraulic cylinder rod (1) to the wheel shaft support (5) through the pin (6), flat washer (7), and cotter pin (8).

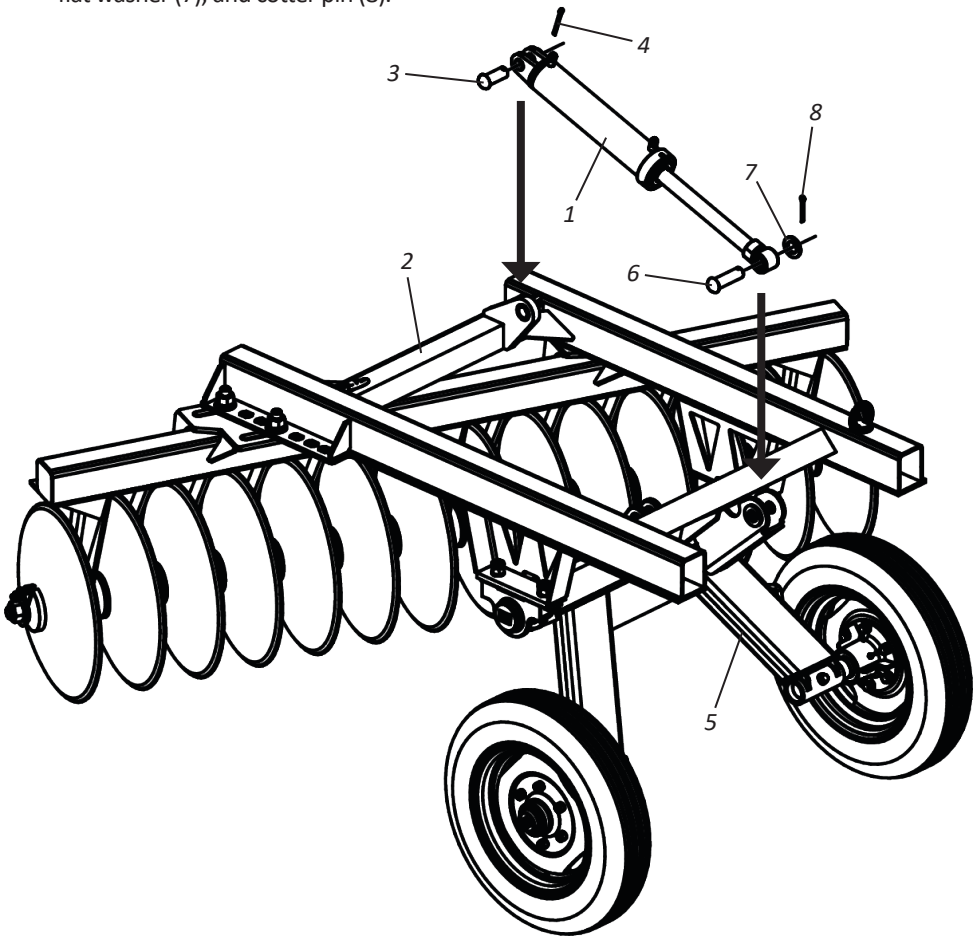

ATTENTION **When mounting the hydraulic cylinder, the terminals of the hydraulic cylinder must be positioned upwards.**

▪ Mounting

• Mounting the coupling head

After assembling the hydraulic cylinder, fasten the coupling head proceeding as follows:

01 - Insert the rod (1) into the pillar (2).

02 - Then, attach the crossbar (3) to the pillar (2) and between the two wear the washers (4), fastening them all using the screws (5), lock washers (6), and nuts (7).

03 - Then, attach the rod (1) to the crossbar of the coupling (3) using the pin (8) washer (9), cotter pin (10), and place the thrust bushing (11), spring (12), thrust bushing (13), nut and locknut (14).

04 - Finish by fastening the stabilizer bar support (15) on the coupling header (16) through the screw (17), lock washer (18) and nut (19).

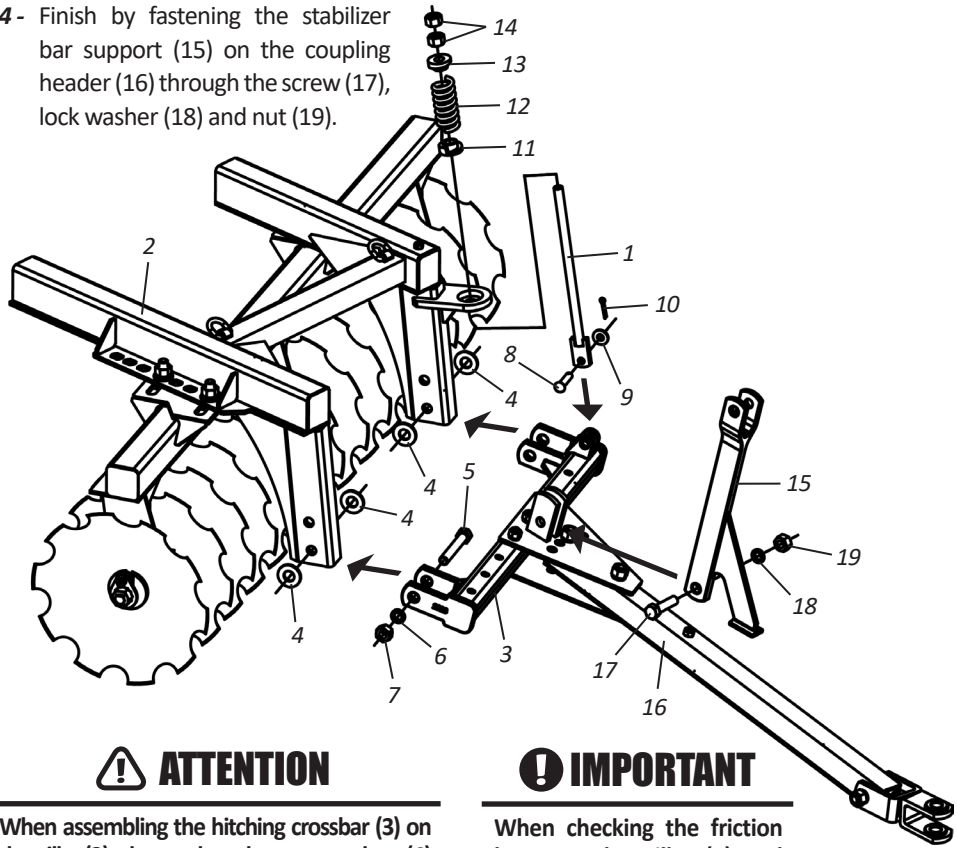

ATTENTION

When assembling the hitching crossbar (3) on the pillar (2), always place the wear washers (4) between both, as these washers prevent the friction between the pillar (2) and the hitching crossbar (3).

IMPORTANT

When checking the friction between the pillar (2) and the crossbar (3), immediately replace the wear washers (4).

▪ Mounting

• Mounting the lift stabilizer bar

After assembling the coupling header, fasten the lifting stabilizer bar proceeding as follows:

01 - Couple the base of the lift stabilizer bar (1) on the wheel articulation shaft (2) through the pin (3), flat washer (4), and cotter pin (5).

02 - Then, attach the front of the lift stabilizer bar (1) to the stabilizer bar support (6) through the pin (7), flat washer (8), and lock (9).

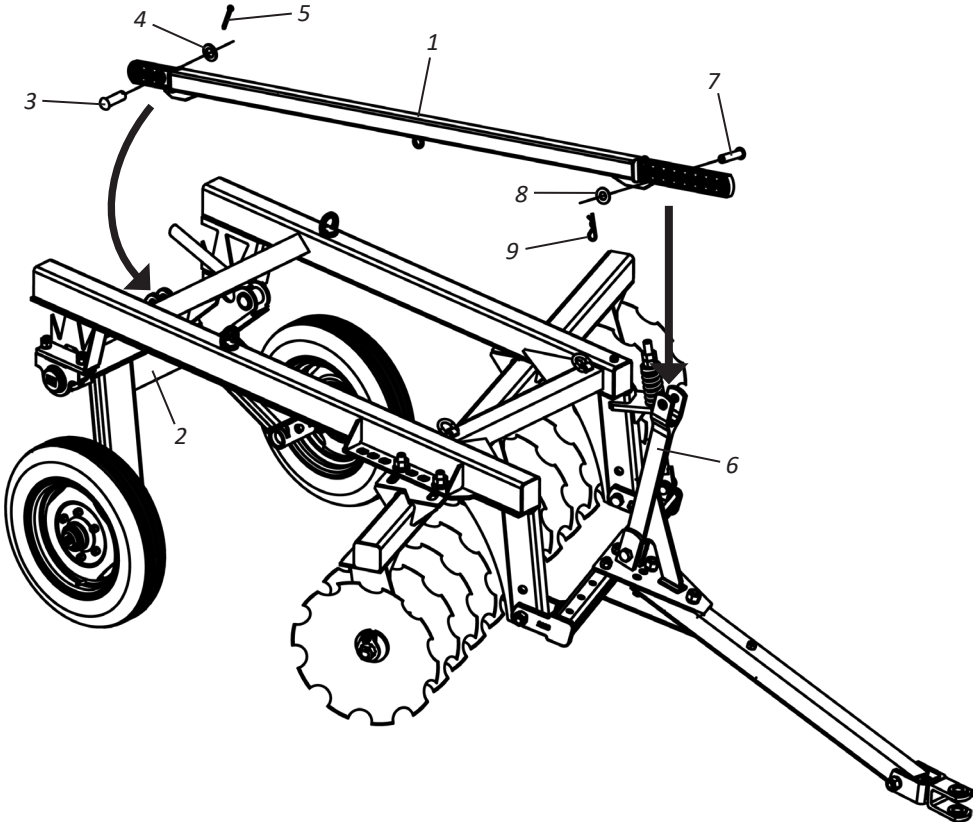

▪ Mounting

• Mounting the hydraulic system (NVCR 28 to 56 Discs / NVCR-E 44 Discs)

To mount the hydraulic system on **NVCR** 28 to 56 discs and **NVCR-E** 44 discs, proceed as follows:

01 - Attach the hose support (1) to the coupling header (2) through the lock nut (3).
02 - Then connect the hydraulic hoses (4) to the hydraulic cylinder (5).
03 - Then, fasten the hydraulic hoses (4) in the pillar (6) through the clamp (7), lock washer (8), screw (9), and pass them inside the hose support (1).

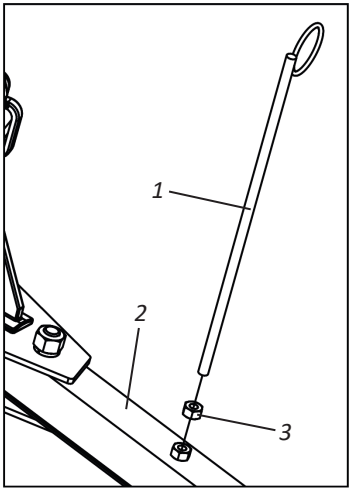

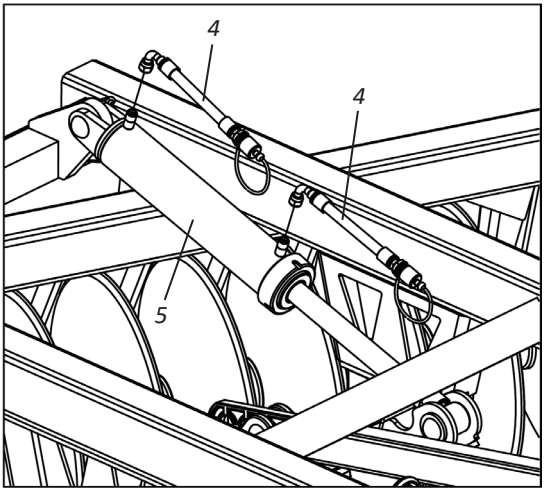

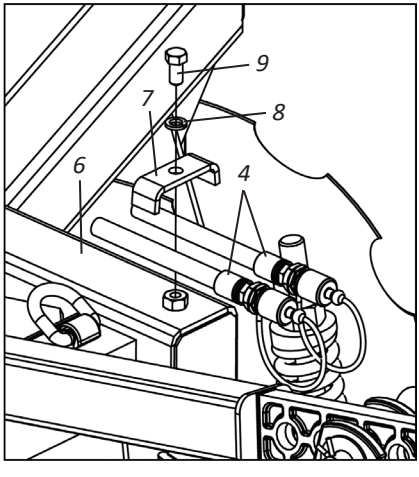

⚠ ATTENTION

When mounting the hydraulic hoses, do not let the terminals touch the ground.

❗ IMPORTANT

Always use "thread seal tape" to attach the "males" of the quick couplings to the hoses.

▪ Hitch

• Hitching the disc harrow to the tractor drawbar (NVCR 28 to 56 Discs / NVCR-E 44 Discs)

To couple the **NVCR** 28 to 56 discs and **NVCR-E** 44 discs, proceed as follows:

01 - Slowly approach the disc harrow to the tractor in reverse, paying attention to the application of the brakes. Then, turn off the tractor's engine, relieve the pressure on the command by operating the lever a few times and check that the couplings are clean, and clean them, if necessary.

02 - Then, activate the control by lowering or raising the tires of the **NVCR/NVCR-E** until the shackle (1) is at the height of the tractor bar.

03 - Then, proceed with the coupling of the **NVCR/NVCR-E** to the tractor, fastening it through the coupling pin (2) flat washer (3), and ring lock (4).

04 - Finish, coupling the hydraulic hoses (5) to the tractor's quick coupling.

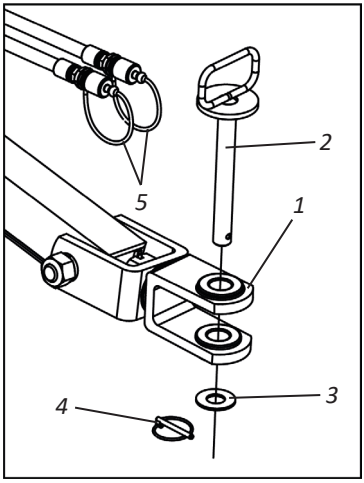

NVCR 28/32/36/40/42/44 DISCS SPACING 175 MM

NVCR 28/32/36/40 DISCS SPACING 200 MM

NVCR-E 44 DISCS SPACING 200 MM

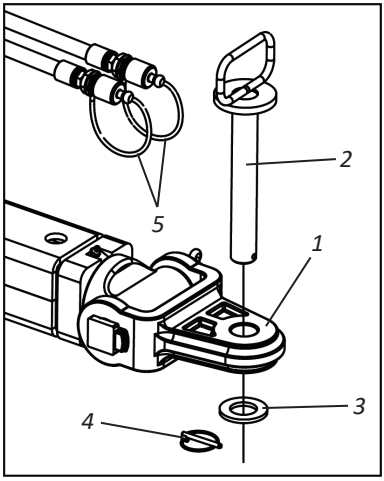

NVCR 48/52/56 DISCS SPACING 175 MM

NVCR 42/44/48/52/56 DISCS SPACING 200 MM

IMPORTANT

Never disconnect the hydraulic hoses without first lowering the NVCR/NVCR-E and relieving pressure from the command.

NOTE

When engaging the NVCR/NVCR-E, look for a safe and easily accessible location. Always ride at idle with low acceleration.

▪ Leveling

• Leveling the disc harrow - Part I

To level the **NVCR/NVCR-E**, proceed as follows:

01 - Place the tractor and the **NVCR/NVCR-E** in a flat location.

02 - Then, actuate to lift the disc harrow and observe whether the **NVCR/NVCR-E** is positioned at the front or at the rear.

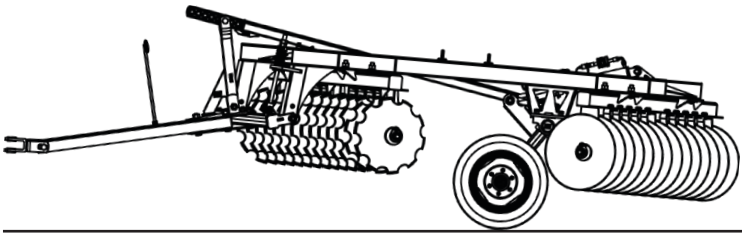

NVCR/NVCR-E POSITIONED AT THE REAR

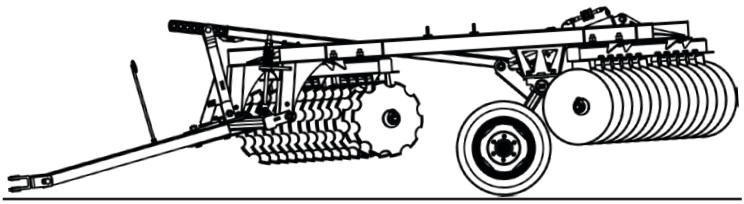

NVCR/NVCR-E POSITIONED AT THE FRONT

If the **NVCR/NVCR-E** is positioned at the front or rear, proceed as follows:

01 - Lower the **NVCR/NVCR-E** until it is completely on the ground.

02 - Release the lock (1), flat washer (2), and remove the pin (3).

03 - Then, adjust another point on the stabilizer bar (4) and fasten it again.

04 - Lift the **NVCR/NVCR-E** and check that the disc harrow is level, as shown in the image on the following page.

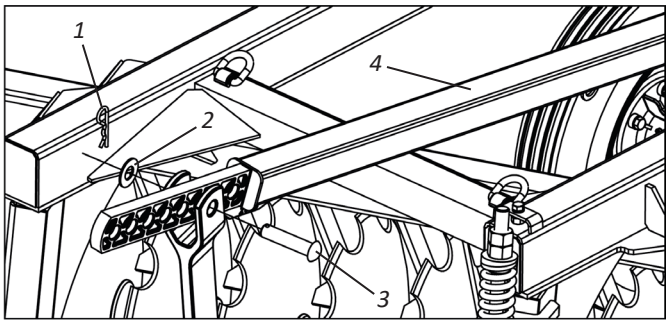

▪ Leveling

• Leveling the disc harrow - Part II

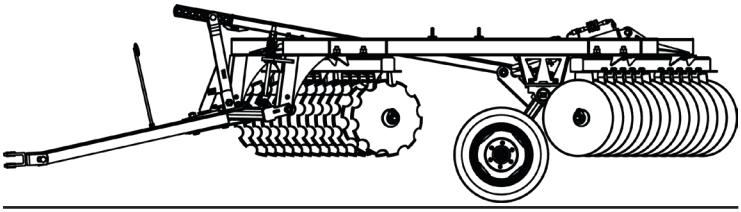

LEVELLED POSITION NVCR

05 - If the **NVCR/NVCR-E** is not level, repeat the previous procedures, adjusting another point on the stabilizer bar (4).

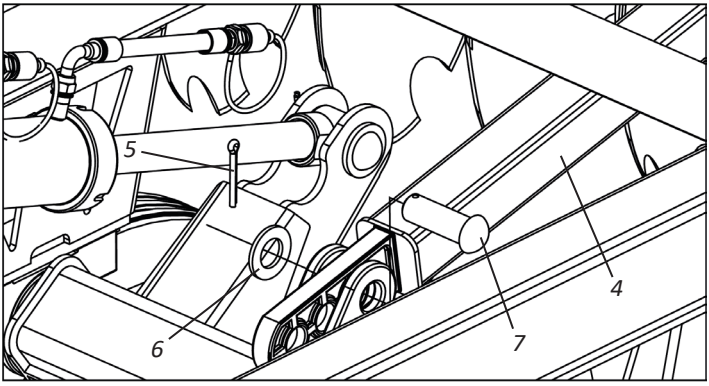

⚠ ATTENTION **If necessary, release the cotter pin (5), flat washer (6), and pin (7), adjust another point on the base of the stabilizer bar (4) and fasten it again.**

▪ Adjustments

• Adjusting for transport

Before transporting the **NVCR/NVCR-E,** proceed as follows:

01 - Fully activate the stroke of the hydraulic cylinder (1) of the wheelset (2).
02 - Then, place the lock (3) fastening it with the pins (4) and locks (5).

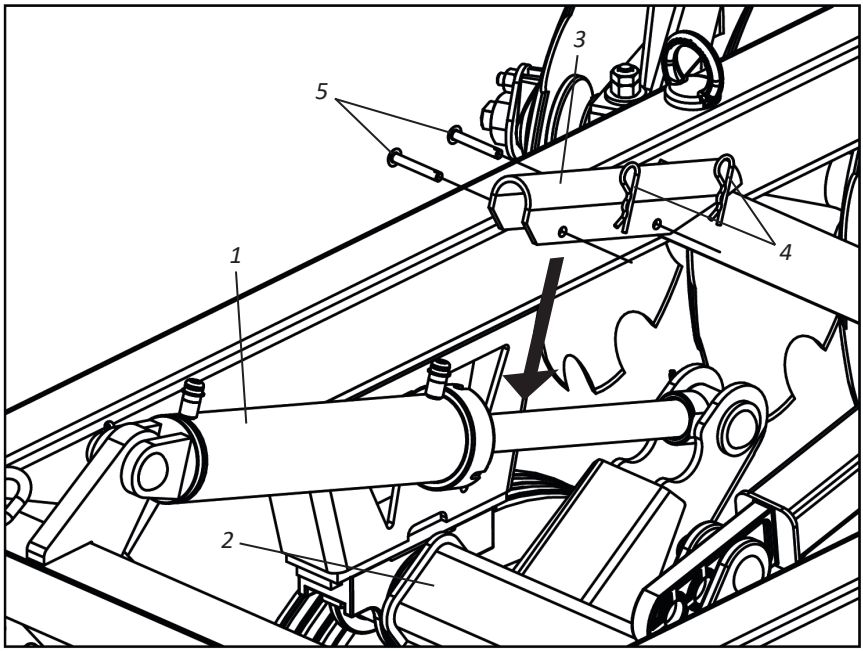

ATTENTION **Do not transport the NVCR/NVCR-E without placing the lock (3) on the hydraulic cylinder (1) of the wheelset (2). Ignoring this warning may damage the hydraulic cylinder (1).**

IMPORTANT **When you are finished transporting the NVCR/NVCR-E, remove the lock (3) from the hydraulic cylinder (1), releasing the locks (5) and pins (4).**

▪ Adjustments

• Adjustment of disc harrow opening

To obtain the ideal disc penetration, the opening of the disc harrow must be adjusted, which varies according to the type of soil:

- TERRAINS WITH GREATEST PENETRATION DIFFICULTY: The disc harrow opening must be increased.

- LIGHT AND LOOSE TERRAINS: The opening of the disc harrow must be reduced.

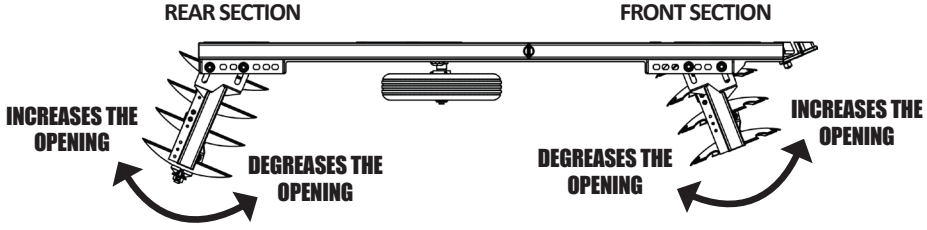

INCREASES THE OPENING: Grater Depth. **DECREASES THE OPENING:** Lower Depth.

To increase or decrease the opening of the disc harrow, proceed as follows:

01 - Loosen the nuts (1) lock washers (2), flat washers (3), remove the locks (4) and screws (5).

02 - Then, adjust the frames (6) by decreasing or increasing the opening.

03 - Then, fasten the frame (6) to the pillar again (7) using the screws (5), locks (4) flat washers (3), lock washers (2), and nuts (1).

! IMPORTANT

Before work we recommend using a medium opening in the disc sections. If you need more penetration, increase the opening angle of the rear section.
The front section generally does not operate with a larger opening than the rear section.
The wheels also assist in the depth control of the discs.

NOTE

We advise you to control the working depth of the NVCR-E by opening the disc sections and to use the tires only in places where the NVCR-E penetrates excessively.

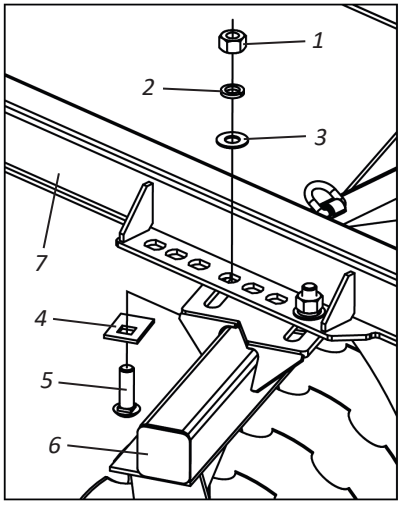

▪ Adjustments

• Adjusting the work depth

To adjust the working depth through the tires, the limiting rings (1) are used, which are placed on the rods of the hydraulic cylinders (2), obtaining countless working depth adjustments. To adjust the work depth, proceed as follows:

01 - Remove the limiting rings (1) from the hydraulic hoses (2).
02 - Then, actuate the rods of the hydraulic cylinders (3) of the wheel until the necessary measure.
03 - Then, place the limiting rings (1) on the rods of the hydraulic cylinders (3) until the entire space between the coupling of the rod and the piston of the hydraulic cylinder (3) is filled.
04 - After finishing work with the **NVCR/NVCR-E**, remove the limiting rings (1) from the hydraulic cylinders (3) of the wheel and place them in the hydraulic hoses (2).

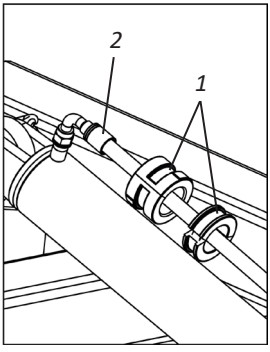

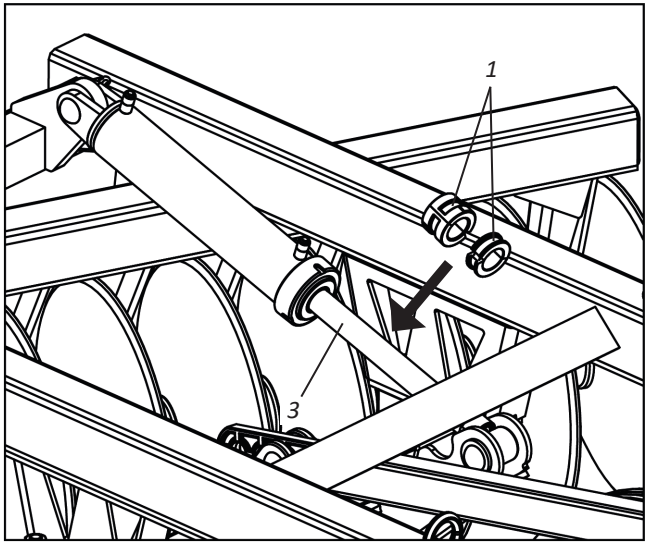

IMPORTANT

After adjusting, the NVCR/NVCR-E will always operate at the same depth in both hard and loose terrain, because the limiting rings (1) are limiting the course of the hydraulic cylinder (3) of the wheelset, that is, preventing the oscillation of the wheels.

NOTE

The limiting rings (1) that come with the NVCR/NVCR-E, have different sizes that combined offer various depth adjustments.

▪ Adjustments

• Adjusting the disc harrow displacement - Part I

The displacement of the **NVCR/NVCR-E** must be done when the harrow is not giving a perfect finish, that is, leaving a trail of the tractor. For the harrow to work centrally with the tractor's traction line, proceed as follows:

01 - Remove the cotter pins (1), loosen the castle nuts (2), flat washers (3) and remove the screw (4).
02 - Then, move the coupling header (5) on the crossbar (6), making the ideal adjustment.
03 - Finish by fastening the screws (4), flat washers (3), castle nuts (2), and cotter pins (1).

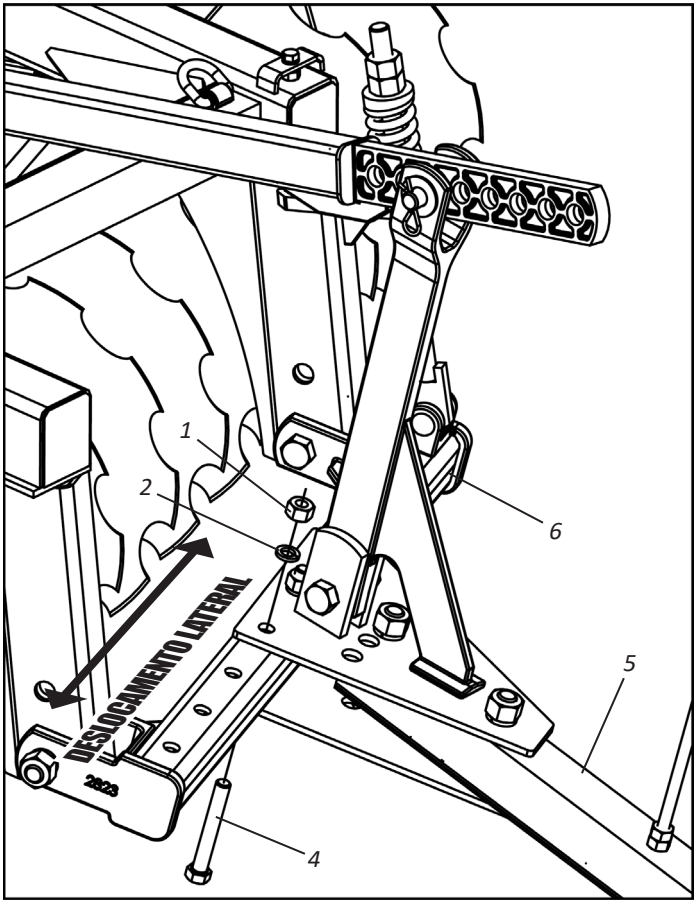

▪ Adjustments

• Adjusting the disc harrow displacement - Part II

Under normal working conditions and during transport, the coupling header (5) must remain in the central hole in the upper (7) and lower (8) plates. When changing the coupling header (5) to the other holes **"A", "B"** and **"B"**, small side displacements of the **NVCR/ NVCR-E** are obtained.

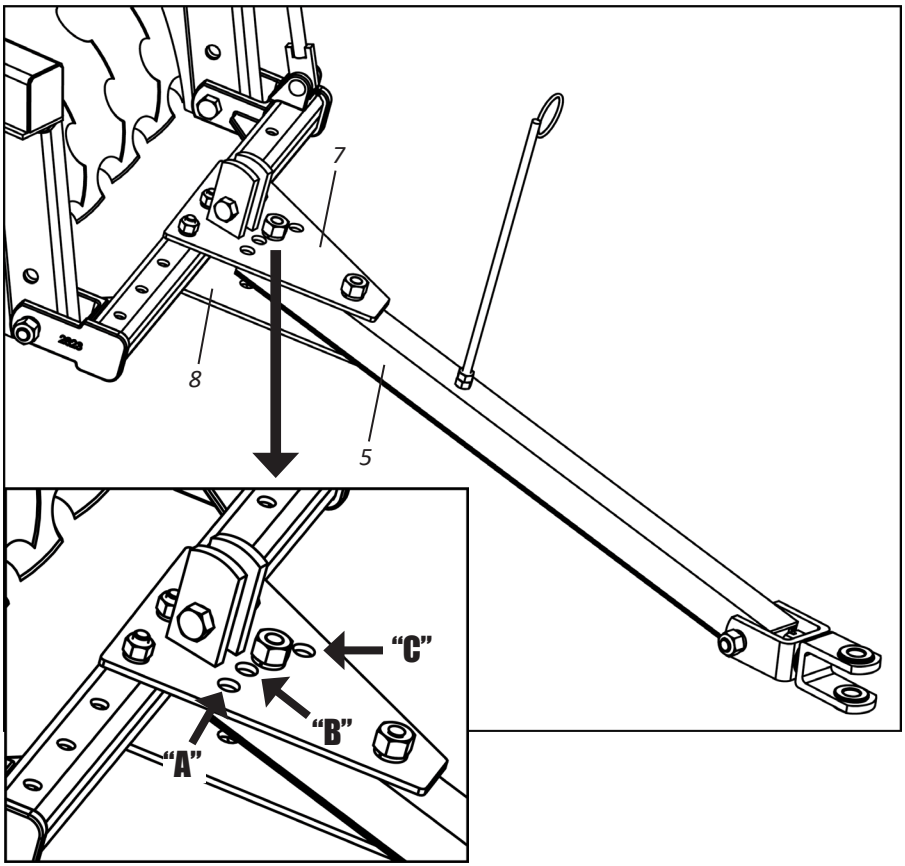

IMPORTANT

The header of the NVCR/NVCR-E and the tractor drawbar must be as aligned as possible with the working direction.
The tractor drawbar must remain loose during work and secure during transport.

▪ Operations

• Operating recommendations - Part I

Preparing the **NVCR/NVCR-E** and the tractor will save you time as well as provide better field work results. The following suggestions may be helpful to you.

DISC HARROW STRUCTURE

After the first day of work with the **NVCR/NVCR-E**, retighten all screws, nuts, and check the condition of the pins and locks of the disc harrow frame. Then retighten all screws and nuts of the disc harrow frame every 24 working hours.

DISC SECTIONS

Pay special attention to the **NVCR/NVCR-E** disc sections. During the first week of using the **NVCR/NVCR-E**, daily retighten all the bolts and nuts on the disc sections, then retighten them periodically.

GENERAL RECOMMENDATIONS

01 - Adjust the tractor according to the contents of the instruction manual, always using the front and rear weights to stabilize the equipment.
02 - Always engage the tractor at idle and very carefully.
03 - When using the **NVCR/NVCR-E** it is important to check the coupling and cross leveling system to make sure that the discs will have the same depth of penetration into the ground.
04 - After coupling and leveling, the next adjustments will be made directly in the field of work, analyzing the terrain in its texture, humidity, and the types of operations to be carried out with the **NVCR/NVCR-E**.
05 - In the tractor, choose a gear in such a way a certain power reserve is maintained, ensuring against unforeseen efforts.
06 - Observe the working and transport speeds specified on page 10. We do not recommend exceeding speeds to maintain service efficiency and avoid possible damage to the **NVCR/NVCR-E**.
07 - When executing maneuvers at the headland, first activate the hydraulic cylinders gradually, lifting the disc sections.
08 - Do not disengage any hoses without first relieving circuit pressure. To do this, operate the control levers a few times with the engine off.

▪ Operations

• Operating recommendations - Part II

09 - Remove sticks or any other objects that may get caught in the discs.

10 - In compacted terrain where disc penetration is difficult, depth may be minimal, making work unsatisfactory. In these cases, it is recommended to apply other more suitable products first.

11 - During work or transport, the drawbar of the tractor must remain fixed.

12 - When performing any maintenance on the **NVCR/NVCR-E**, lower it to the ground and turn off the engine.

13 - The **NVCR/NVCR-E** has several adjustments, but only local conditions can determine its best adjustment.

If in doubt, never operate or handle the NVCR/NVCR-E, consult After Sales.
Telephone: 0800-152577 / E-mail: posvenda@baldan.com.br

• Direction of maneuvers

During harrowing (with the discs on the ground), DO NOT make maneuvers to the right, as the angles formed by the disc sections will transmit great effort to the equipment, especially the traction components.

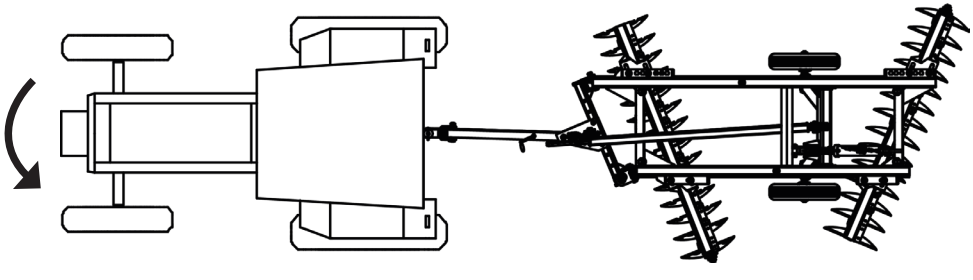

ATTENTION **With the disc sections on the ground it is necessary to perform maneuvers on the left (closed side of the NVCR/NVCR-E) avoiding overloads.**

▪ Operations

• How to start harrowing

Before harrowing, the terraces or contour lines must always be followed, starting the operation in the sense that the terrace is always on the left side of the tractor.

NOTE **Before starting operations with the NVCR/NVCR-E, check it thoroughly, retightening all screws, nuts, hose terminals, shafts, and especially the disc sections.**

• Harrowing from the outside to the inside

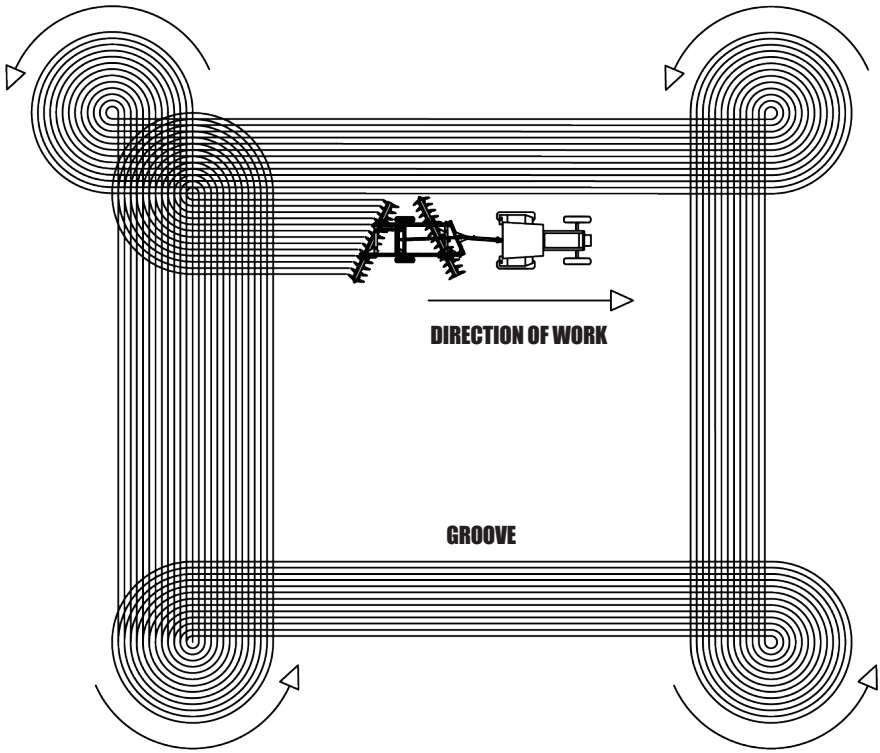

IMPORTANT **Try to drive the tractor in order to obtain a good performance between each pass of the NVCR/NVCR-E. Avoid the formation of windrows or bands without railing.**

▪ Operations

• Harrowing from the inside out

In this sense, greater perfection is achieved. When you are walking a lot at the headlands, you may want to start another court.

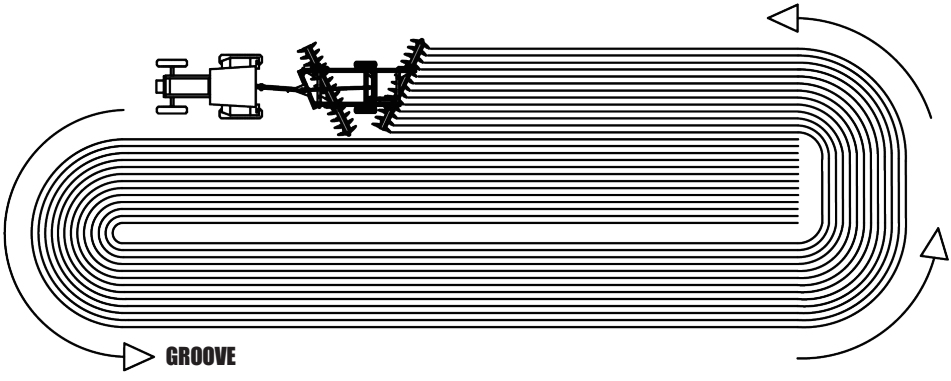

• Plots with contour lines

On terrain with contour lines it is usual to start two plots at a time, taking care to start work with the level curve on the left side of the tractor. When you reach the middle of the level curve, it is a good idea to start another field to decrease fuel consumption.

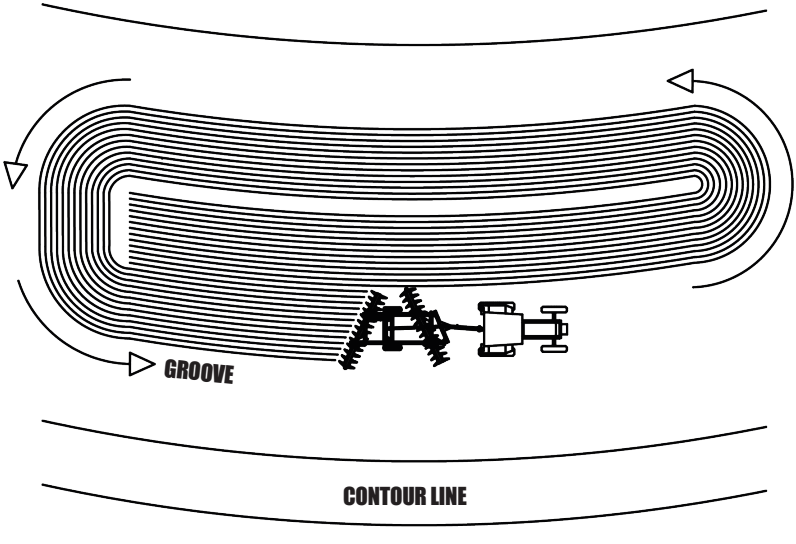

▪ Calculation

• Approximate hourly production - Part I

To calculate the approximate hourly output of the **NVCR**, use the following formula:

$$A = \frac{L \times V \times F}{X}$$

WHERE:

A = Area to be worked
L = Working width of the harrow (in meters)
V = Average speed of the tractor (in meters/hour)
F = Production factor: 0.90
X = Value of the hectare: 10,000 m² (value varies by region)

Example: An **NVCR 28 discs,** how much Ha will it will produce in an hour of work at an average speed of 7 km/h.

A = ?
L = 2,35 m
V = 7.000 m/h
F = 0,90
X = 10.000 m² (Calculated in hectare)

$$A = \frac{2{,}35 \times 7.000 \times 0{,}90}{10.000} = 1{,}48 \text{ Ha/h}$$

Model	Disc Spacing	Nr of Discs	Working Width (mm)	Average Speed (m/h)	Production Factor	Approximate Production in Hectare Hour
NVCR	175 mm	28	2350	7.000	0,90	1,48
		32	2700	7.000	0,90	1,70
		36	3050	7.000	0,90	1,92
		40	3420	7.000	0,90	2,15
		42	3600	7.000	0,90	2,26
		44	3760	7.000	0,90	2,36
		48	4100	7.000	0,90	2,58
		52	4450	7.000	0,90	2,80
		56	4800	7.000	0,90	3,02

▪ Calculations

• Approximate hourly production - Part II

Model	Disc Spacing	Nr of Discs	Working Width (mm)	Average Speed (m/h)	Production Factor	Approximate Production in Hectare Hour
NVCR	200 mm	28	2700	7.000	0,90	1,70
		32	3100	7.000	0,90	1,95
		36	3500	7.000	0,90	2,20
		40	3900	7.000	0,90	2,45
		42	4100	7.000	0,90	2,58
		44	4300	7.000	0,90	2,70
		48	4700	7.000	0,90	2,96
		52	5100	7.000	0,90	3,21
		56	5500	7.000	0,90	3,46

Model	Disc Spacing	Nr of Discs	Working Width (mm)	Average Speed (m/h)	Production Factor	Approximate Production in Hectare Hour
NVCR-E	200 mm	44	4300	7.000	0,90	2,70

The formula for calculating the approximate production, refers to the calculation of areas to work or worked by the **NVCR**. If you want to know the time it will take to work an area of known value, just divide the value of this area by the hourly production of **NVCR.**

Example: What's the "X" time it will take for a **NVCR 28 Discs** harrow to produce 35 hectares, at an average speed of 7km/h?

$$X = \frac{35\ Ha}{1{,}48\ Ha/h} = 23{,}64 \text{ hours approximately to work 35 hectares.}$$

⚠ ATTENTION **The hourly production of NVCR/NVCR-E can vary due to factors that change the rhythm of work such as (soil humidity and hardness, terrain slope, inadequate adjustments, and working speed).**

▪ Maintenance

The **NVCR/NVCR-E** has been developed to provide you with maximum yield under terrain conditions. Experience has shown that periodic maintenance of certain parts of the **NVCR/NVCR-E** is the best way to help you have no problems, so we suggest checking.

• Tire pressure

Tires should always be properly calibrated to prevent premature wear due to over or under pressure.

TIRES 600 X 16 6 CANVAS
USE 44 LBS/POL²

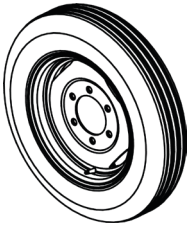

STANDARD:
NVCR 28 TO 44 DISCS

TIRES 750 X 16 10 CANVAS
USE 60 LBS/POL²

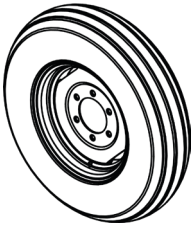

STANDARD:
NVCR 48 TO 56 DISCS
NVCR-E 44 DISCS

OPTIONAL:
NVCR 28 TO 44 DISCS

TIRES 900 X 20 14 CANVAS
USE 100 LBS/POL²

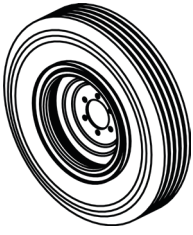

OPTIONAL:
NVCR-E 44 DISCS

TIRES 11 X 15 10 CANVAS
USE 44 LBS/POL²

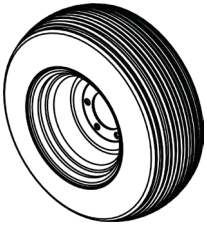

OPTIONAL:
NVCR 48 TO 56 DISCS
(SPACING 175 MM)

OPTIONAL:
NVCR 42 TO 56 DISCS
(SPACING 200 MM)

TIRES 11 X 15 12 CANVAS
USE 52 LBS/POL²

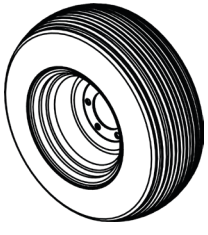

OPTIONAL:
NVCR-E 44 DISCS

⚠ ATTENTION

Never weld the wheel with a mounted tire, as heat can increase air pressure and cause the tire to explode.
When inflating a tire, position yourself next to the tire, never in front of it.
When inflating the tire, always use a containment device (inflation cage).
Assemble the tires with suitable equipment. The service should be performed only by persons qualified for the job.

! IMPORTANT

When calibrating the tires, do not exceed the recommended calibration.

NOTE

Tractor tire pressure should be as recommended by the manufacturer.

▪ Maintenance

The **NVCR/NVCR-E** has been developed to provide maximum performance over land conditions. Experience has shown that periodic maintenance of certain parts of the **NVCR/NVCR-E** is the best way to help you avoid problems, so we suggest verification.

ATTENTION **Check nuts and bolts constantly, if necessary, retighten them. General harrow retention maintenance should be done every 8 hours of work.**

• Lubrification

Lubrication is indispensable for the good performance and durability of **NVCR/NVCR-E** moving parts, contributing to the maintenance cost savings.

Before starting the operation, carefully lubricate all grease cups, always observing the lubrication intervals in the following pages. Make sure of the lubricant quality regarding its efficiency and purity, avoiding products contaminated by water, dust and other agents.

• Table of greases and equivalents

Manufacturer	Types of grease recommended
Petrobrás	Lubrax GMA-2
Atlantic	Litholine MP 2
Ipiranga	Ipiflex 2
Castrol	LM 2
Mobil	Grease MP
Texaco	Marfak 2
Shell	Alvania EP 2
Esso	Multi H
Bardahl	Maxlub APG-2EP
Valvoline	Palladium MP-2
Petronas	Tutela Jota MP 2 EP
	Tutela Alfa 2K
	Tutela KP 2K

ATTENTION **If there are equivalent manufacturers and/or brands that are not listed in the table, consult the manufacturer's technical manual.**

▪ Maintenance

- Lubrication every 24 hours of work

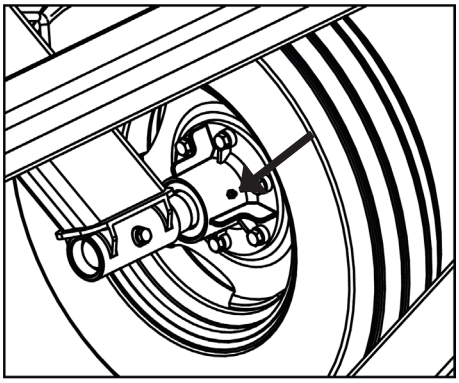

NVCR 28 TO 56 DISCS
NVCR-E 44 DISCS

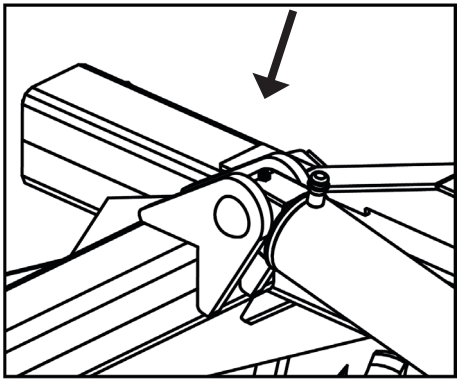

NVCR-E 44 DISCS

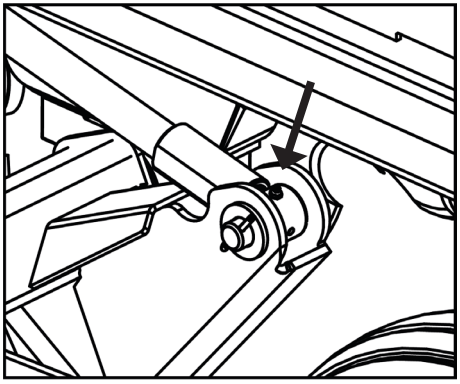

NVCR-E 44 DISCS

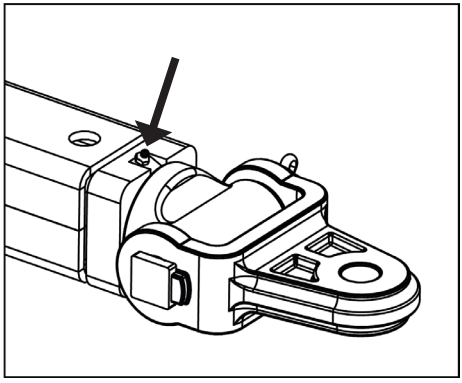

NVCR 48/52/56 DISCS
SPACING 175 MM

NVCR 42/44/48/52/56 DISCS
SPACING 200 MM

⚠ ATTENTION When lubricating the NVCR/NVCR-E, do not exceed the amount of new grease. Insert a sufficient amount.

▪ Maintenance

• Self-lubricating bushings

The **NVCR/NVCR-E** in the models below have self-lubricating bushings. Some models have self-lubricating bushings on the hydraulic cylinder rod (1) and on the wheel axle fixing hub (2), in other models, only on the wheel axle fixing hub (2). These bushings do not require any type of grease or lubricant.

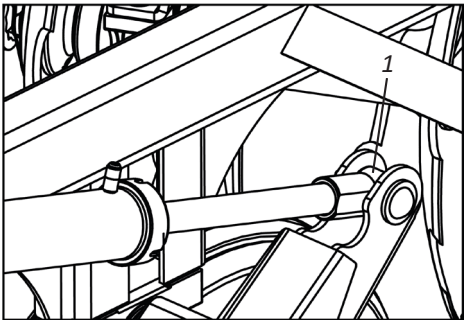

NVCR 28 TO 56 DISCS

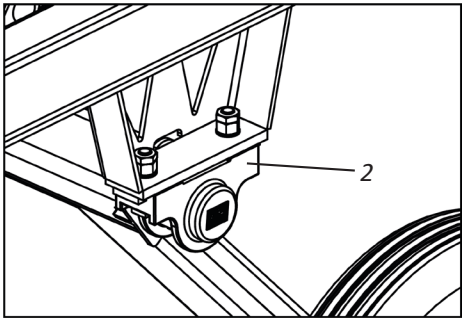

NVCR 28 TO 56 DISCS / NVCR-E 44 DISCS

⚠ ATTENTION

Only in the initial assembly of the hydraulic cylinder rod (1) and the wheel shaft fastening hub (2), should grease be inserted in the entire bushing to prevent oxidation in the rod fastening pin and the wheel shaft.

❗ IMPORTANT

When replacing the self-lubricating bushings of the hydraulic cylinder rod (1) and the wheel shaft fastening hub (2), also insert grease in the entire bush.

▪ Maintenance

• Oil bearing (NVCR 28 to 56 discs)

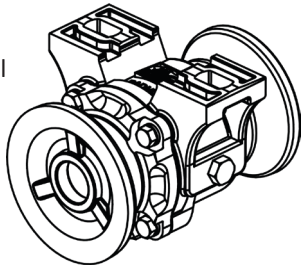

In the first days of work with the **NVCR**, check the bearing oil level daily, then check every 120 working hours.

NOTE

The ideal oil level is when it reaches the plug hole.
To check the bearing oil level, look for a flat place.

ATTENTION

Change oil every 1200 working hours using 0.160 liters.
Use transmission oil: 90 API GL4, MIL-L-2105; SAEJ306, may/81: SAE 80W, 90 and 140.

• Grease bearing (NVCR 28 to 56 discs)

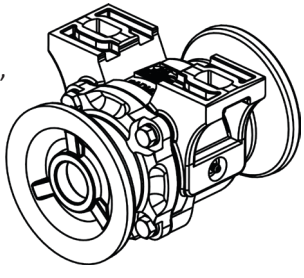

Grease bearings should be lubricated every 12 hours of work, using the grease specified below.

NOTE

Before relubricating the bearing, clean the grease fitting with a clean, lint-free cloth. Replace damaged grease fittings.

ATTENTION

The amount of grease in each bearing is 120 grams.
Use only grease: EP (Specification DIN51825 KP00K Consistency NLGI 2/3).

• Axial bearing (NVCR-E 44 discs)

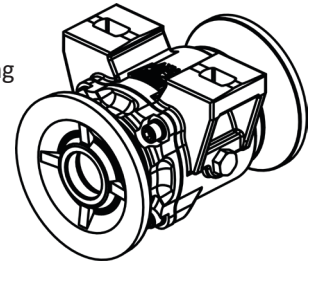

In the first days of work with the **NVCR-E**, check the bearing oil level daily, then check every 120 working hours.

NOTE

The ideal oil level is when it reaches the plug hole.
To check the bearing oil level, look for a flat place.

ATTENTION

Change oil every 1200 working hours using 0.100 liters.
Use transmission oil: 90 API GL4, MIL-L-2105; SAEJ306, may/81: SAE 80W, 90 and 140.

▪ Maintenance

• Operational maintenance

PROBLEMS	PROBABLE CAUSES	SOLUTIONS
Tires are damaged.	Work area with rocks, stubs or crop remains with stems that shred the tire.	Eliminate elements that damage tires before using the NVCR/NVCR-E.
	Improper tire pressure, creating deformations.	Maintain proper tires pressure.
Weird noise on wheels.	Loosen wheels or gap in wheel hub.	Retighten the wheel nuts and adjust wheel hub bearings.
	Breaking of bearings.	Identify the occurrence and females of the same type.
Quick coupling is not fitting.	Couplings of different types.	Change them for males and females of the same type.
Leakage in hydraulic hose.	Lack of sealing material on the thread.	Use sealing tape and retighten carefully.
	Insufficient tightening.	Retighten carefully.
	Damaged repairs.	Replace hubs.
Leakage in quick couplings.	Insufficient tightening.	Retighten carefully without excess.
	Damaged repairs.	Replace hubs.
Quick coupling is not coupling.	Couplings of different brands.	Use a quick coupling of the same brand.
	Mixing of needle-type coupling with sphere-type coupling.	Always use quick coupling of the same type.
	Pressure on the system.	Relief the pressure to couple.

▪ Maintenance

• Cares

01 - Before each job, check the condition of all hoses, pins, bolts, bearings, discs and sections. Where necessary, retighten them.
02 - The displacement speed should be carefully controlled according to the land´s conditions.
03 - The **NVCR/NVCR-E** is used in several applications, requiring knowledge and attention during handling.
04 - Only local conditions can determine the best method of operation of **NVCR/NVCR-E**.
05 - When assembling or dismantling any part of the **NVCR/NVCR-E**, employ appropriate methods and tools.
06 - Carefully observe the lubrication intervals in the various lubrication points of the **NVCR/NVCR-E**. Respect the lubrication intervals.
07 - Always check if the parts have wears. If there is a need for replacement, always demand Baldan original parts.
08 - Keep the **NVCR/NVCR-E** discs always sharp.

! IMPORTANT | **Proper and periodic maintenance are necessary to ensure the long life of NVCR/NVCR-E.**

▪ Maintenance

• General cleaning - Part I

01 - When storing the **NVCR/NVCR-E**, make a general cleaning and wash it thoroughly with water only. Make sure the paint has not worn out, if it did, give a general coat, pass the protective oil and fully lubricate the **NVCR/NVCR-E**. Do not use burned oil or other abrasive.
02 - Fully lubricate the **NVCR/NVCR-E**. Check all moving parts of the **NVCR/NVCR-E** for wear and tear, make the necessary adjustment or replacement of the parts, leaving the harrow ready for the next job.
03 - After all maintenance work, store the harrow in a covered and dry place, properly supported.

Avoid: - That the discs come into direct contact with the ground.
- The compression of the springs.
- That the hydraulic hoses be properly capped.

▪ Maintenance

• General cleaning - Part II

04 - When connecting or disconnecting hydraulic hoses, do not let the terminals touch the ground. Before connecting the hydraulic hoses, wipe the connections with a clean, lint-free cloth. **Do not use tow!**

05 - Replace all adhesives, especially those about warnings, that are damaged or missing. Make everyone aware of the importance and risks of accidents when instructions are not followed.

06 - After all maintenance care, store your **NVCR/NVCR-E** on a flat, covered, dry surface, away from animals and children.

07 - We recommend washing the **NVCR/NVCR-E** with water only at the start of work.

⚠ ATTENTION | **Do not use chemicals or abrasives to rinse the NVCR/NVCR-E, this may damage the paint and adhesives.**

• Conservation of the harrow - Part I

To prolong the life and appearance of the **NVCR/NVCR-E** for longer, follow the instructions below:

01 - Wash and clean all harrow components during and at the end of the work season.

02 - Use neutral products to clean the harrow, following the safety and maintenance instructions provided by the manufacturer.

03 - Always carry out maintenance during the periods indicated in this manual.

• Conservation of the harrow - Part II

The practices and care below if adopted by the owner or operator make a difference to the conservation of the **NVCR/NVCR-E.**

01 - Be careful when performing high-pressure washing; do not direct the water jet directly into the connectors and electrical components. Isolate all electrical components;

02 - Use only NEUTRAL detergent and water (pH equal to 7);

03 - Apply the product, following the manufacturer's instructions strictly, on the wet surface and in the correct sequence, respecting the time of application and washing;

04 - Stains and dirt not removed with the products should be removed with the aid of a sponge.

05 - Rinse the machine with clean water to remove any chemical residues.

▪ Maintenance

• Conservation of the harrow - Part III

06 - Do not use: - Detergents with a basic active ingredient (pH greater than 7), can attack/stain the paint on the harrow.

- Detergents with acid active ingredient (pH less than 7), act as stripper/remover of zinc coating (the protection of parts against oxidation).

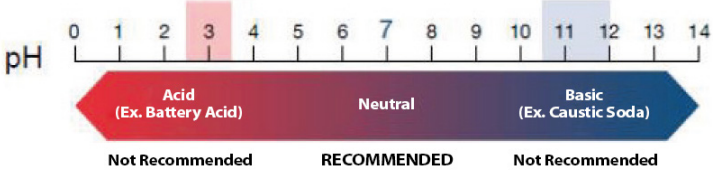

07 - Allow the machine to dry in the shade so that it does not accumulate water in its components. Very fast drying can cause stains on your paint.

08 - After drying, lubricate all chains and greases according to the recommendations in the operator's manual.

09 - Spray all the machine, especially the zinc parts, with protective oil, following the manufacturer's application guidelines. The protective also prevents dirt from adhering to the machine, facilitating subsequent washings.

10 - Observe curing (absorption) time and application intervals as recommended by the manufacturer.

⚠ ATTENTION | **Do not use any other type of oil to protect the harrow (used hydraulic oil, "burnt" oil, diesel oil, castor oil, kerosene, etc.).**

! IMPORTANT | **We recommend the following protective oils:**
- Bardahl: Agro protective 200 or 300
- ITWChemical: Zoxol DW - Series 4000

OBSERVATION | **Ignoring the conservation measures mentioned above may result in the loss of warranty for painted or zinc-coated components which may exhibit oxidation (rust).**

▪ Lifting

• Lifting points

The **NVCR/NVCR-E** has 4 **"A"** lifting points located on the pillar and identified by the sticker (1) attached to the side of these points. When assembling, loading, unloading or maintaining the **NVCR/NVCR-E**, if you need to hoist it with a winch, it is essential to engage the chains at the 4 **"A"** lifting points.

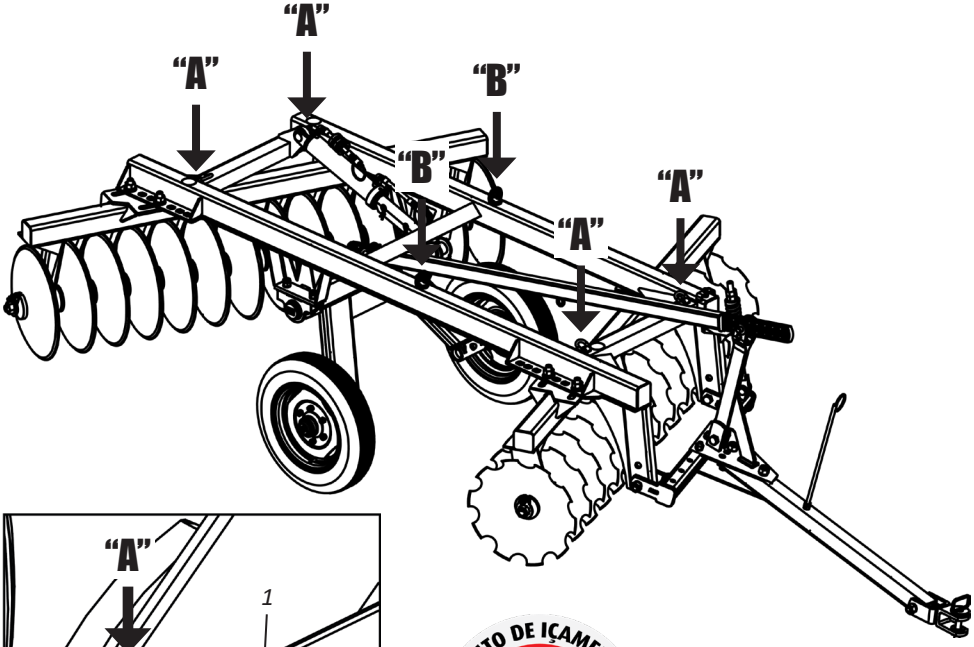

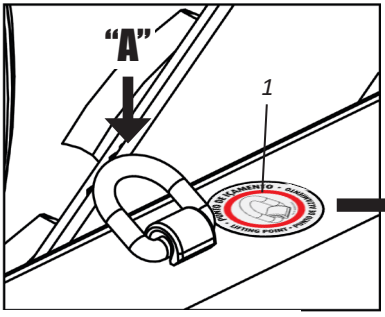

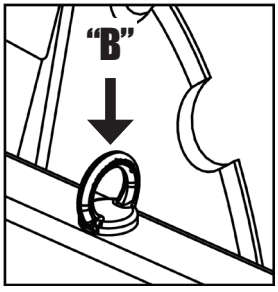

MAXIMUM LOAD: 1000 KG

MAXIMUM LOAD: 300 KG

⚠ ATTENTION

DO NOT under any circumstances use the 2 "B" points to lift the NVCR/NVCR-E. These points are only used during the NVCR/NVCR-E manufacturing process. Ignoring this warning may cause serious accident or death.

▪ Optional

• Optional accessories (NVCR)

The **NVCR** has options that can be purchased according to the needs of the work.

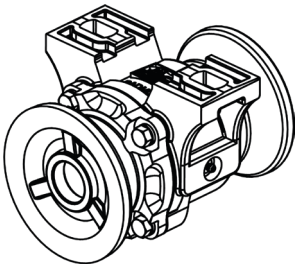

GREASE BEARING WITHOUT SPACING 175 MM AND 200 MM NVCR 28 TO 56 DISCS

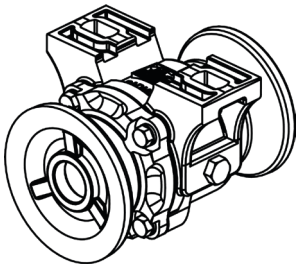

OIL BEARING WITHOUT SPACING 175 MM AND 200 MM NVCR 28 TO 56 DISCS

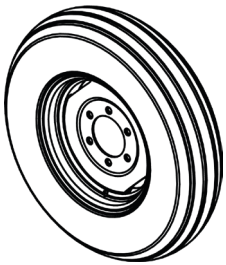

TIRE 750 X 16 10 CANVAS NVCR 28 TO 44 DISCS

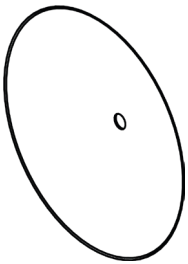

FLAT DISC 20", 22"

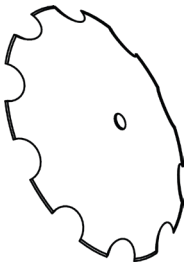

CUT DISC 20", 22"

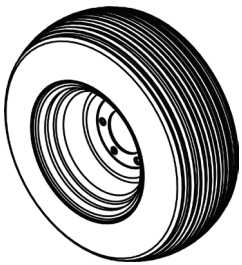

TIRE 11 X 15 - BL 10 CANVAS

NVCR 48 TO 56 DISCS (SPACING 175 MM)

NVCR 42 TO 56 DISCS (SPACING 200 MM)

• Optional accessories (NVCR-E)

The **NVCR-E** has options that can be purchased according to the needs of the work.

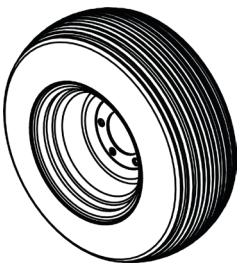

TIRE 11 X 15 - BL 12 CANVAS

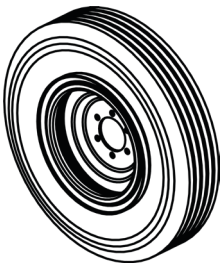

TIRE 900 X 20 14 CANVAS

▪ Identification

• Identification plate

To see the parts catalog or to request technical assistance from Baldan, always inform model (01), serial number (02) and date of manufacture (03), which is on your **NVCR/NVCR-E** nameplate.

⚠ ATTENTION

The drawings in this Instruction Manual are merely illustrative.

CONTACT

In case of doubts, never operate or handle your equipment without referring to Post-Sales.
Telephone: 0800-152577
e-mail: posvenda@baldan.com.br

PUBLICATIONS

Code: 60550108936 | CPT: NVCR08918A

PEÇAS® ORIGINAIS BALDAN
ORIGINAL PARTS • PIEZAS ORIGINALES

▪ Identification

• Product Identification

Please make the correct identification of the data below, to always have information about the service life of your equipment.

Owner: _____

Dealer: _____

Property: _____

City: _____

State: _____

Certificate of Warranty no.: _____

Implement: _____

Serial No: _____

Purchase Date: _____

Invoice: _____

▪ Notes

Certificate of Warranty

BALDAN IMPLEMENTOS AGRÍCOLAS S/A ensures the dealer normal performance of the implement for a period of six (6) months as of the delivery date on the retail invoice to the first final consumer. During this period, **BALDAN** undertakes to repair defects in material and/or of manufacture of its liability, including labor, freight and other expenses of the dealer's liability.

In the warranty period, request and replacement of eventual defective parts shall be made to the dealer of the area, who will submit the faulty piece for **BALDAN** analysis. When this procedure is not possible and the resolving capacity of the dealer is exhausted, the dealer will request the support of **BALDAN Technical Assistance** through a specific form distributed to dealers. After analyzing the replaced items by Baldan Technical Assistance, and concluding that it is not a warranty, then the dealer will be responsible for the costs related to the replacement; as well as material expenses, travel including accommodation and meals, accessories, lubricant used and other expenses arising from the call out to Technical Assistance, and Baldan company is authorized to carry the respective invoice in the name of the resale. Any repair carried in the product within the dealer warranty deadline will only be authorized by **BALDAN** upon previous budget presentation describing parts and work to be performed.

The product is excluded from this term if it is repaired or modified by representatives not belonging to the **BALDAN** dealer network, as well as the application of non-genuine parts or components to the user's product. This warranty is void where it is found that the defect or damage is caused by improper use of the product, failure to follow instructions or inexperience of the operator.

It is agreed that this warranty does not cover tires, polyethylene tanks, cardan, hydraulic components, etc., which are equipment guaranteed by their manufacturers. Manufacturing and/or material defects, object of this warranty term, will not constitute, under any circumstances, grounds for termination of a purchase agreement, or for indemnification of any nature.

BALDAN reserves the right to change and/or perfect the technical characteristics of its products, without previous notice, and without obligation to proceed in the same way with the products previously manufactured.

▪ Inspection and Delivery Certificate

SERVICE BEFORE DELIVERY: This implement was carefully prepared by the sale organization, with all its parts inspected according to the manufacturing prescriptions.

DELIVERY SERVICE: The user was informed about the current warranty terms and instructed on the usage maintenance precautions.

I confirm that the user has been informed about the current warranty terms and instructed on the usage maintenance precautions.

Implement: _____ Serial Number: _____

Date: _____ Tax Number: _____

Dealer: _____

Telephone: _____ CEP: _____

City: _____ State: _____

Owner: _____

Telephone: _____

Address: _____ Number: _____

City: _____ State: _____

E-mail: _____

Sale date: _____

Signature / Dealer Stamp _____

1st copy - Owner

▪ Inspection and Delivery Certificate

SERVICE BEFORE DELIVERY: This implement was carefully prepared by the sale organization, with all its parts inspected according to the manufacturing prescriptions.

DELIVERY SERVICE: The user was informed about the current warranty terms and instructed on the usage maintenance precautions.

I confirm that the user has been informed about the current warranty terms and instructed on the usage maintenance precautions.

Implement: _____ Serial Number: _____

Date: _____ Tax Number: _____

Dealer: _____

Telephone: _____ CEP: _____

City: _____ State: _____

Owner: _____

Telephone: _____

Address: _____ Number: _____

City: _____ State: _____

E-mail: _____

Sale date: _____

Signature / Dealer Stamp _____

2nd copy - Dealer

▪ Inspection and Delivery Certificate

SERVICE BEFORE DELIVERY: This implement was carefully prepared by the sale organization, with all its parts inspected according to the manufacturing prescriptions.

DELIVERY SERVICE: The user was informed about the current warranty terms and instructed on the usage maintenance precautions.

I confirm that the user has been informed about the current warranty terms and instructed on the usage maintenance precautions.

Implement: _____ Serial Number: _____

Date: _____ Tax Number: _____

Dealer: _____

Telephone: _____ CEP: _____

City: _____ State: _____

Owner: _____

Telephone: _____

Address: _____ Number: _____

City: _____ State: _____

E-mail: _____

Sale date: _____

Signature / Dealer Stamp _____

3rd copy - Manufacturer (Please send completed within 15 days).

1.74.05.0059-5

AC MATÃO
ECT/DR/SP

RESPONSE CARD

NO STAMPING IS REQUIRED

THE STAMP WILL BE PAID BY:

BALDAN

BALDAN IMPLEMENTOS AGRÍCOLAS S/A.

Av. Baldan, 1500 | Nova Matão | CEP: 15993-900 | Matão-SP. | Brasil

Tel: (16) 3221-6500 | Fax: (16) 3382-6500

www.baldan.com.br | email: sac@baldan.com.br

Export: Tel: +55 (16) 3221-6500 | Fax: +55 (16) 3382-4212 | 3382-2480

email: export@baldan.com.br

BALDAN

Avenida Baldan, 1500
Nova Matão
15.993-900
Matão/SP - Brasil
sac@baldan.com.br
export@baldan.com.br

+55 16 3221 6500
baldan.com.br