Parts
Catalog

POTENZA

Maize Plataform

BALDAN

Index

Functional Main Frame W/Cutout 4
Table Functional Main Frame W/Cutout 5-7
Functional Main Frame W/Cutout For Plug 8
Table Functional Main Frame W/Cutout For Plug 9-10
Functional Main Frame For Plug 11
Table Functional Main Frame For Plug 12-13
Protection For Main Frame 14
Table Protection For Main Frame 15-16
Shaft For Functional Main Frame W/Cutout 17
Shaft For Main Frame W/Cutout for Plug 18
Shaft For Functional Main Frame For Plug 19
Complete Shaft of Plate 20
Spiral Conductor 3260mm to 7760mm 21
Spiral Conductor 8170mm and 8615mm 22
Spiral Conductor Without Flip 4160mm to 7760mm 23
Coupling Support CASE 2366-2388-2399 24
Coupling Support CLAAS 24
Coupling Support JD-SLC-STS 25
Coupling Support MF3640-5650-6845-6850-6855 and IDEAL9070-9075-9090-1170-1175 25
Coupling Support MF 9690-9790-VALTRA BC 6500-7500 26
Coupling Support MF3640-5650-ADVANCE MF32-34-38 VALTRA BC 4500 26
Coupling Support NH TC 57-55 27
Coupling Support NH 4040-5050 27
Coupling Support NH 8040-8055 28
Coupling Support NH TC 59 28
Coupling Support NH TC 5070-5090-CS 660 CR 5080-6080-9060 and CASE2566-2688-8010-8120 29
Large Lateral Protection 30
Chains Protection 31
Lateral Plastic Nozzle 31
Complete Protection For Rows 32
Complete Rubber Protection 33
Complete Protection For Lateral 34
Fixation Lateral Support of Protection 35
Sensor Complete Support JOHN DEERE-MASSEY-VALTRA 36
Rows Union Support 36
Complete Harvester Row 37
Table Complete Harvester Row 38
Complete Chain Stretcher 39
Suporte do Rolete Completo 39
Complete Chain Support 40
Complete Oil Deposit (Functional Main Frame W/Cutout) 41
Complete Oil Deposit (Functional Main Frame W/Cutout For Plug) 42
Complete Oil Deposit (Functional Main Frame W/Cutout For Upper Plug) 43
Cardans 44
Joints , Shafts and Gears 45
Complete Shaft 45
Sprowd Shaft for Harvesters NH 46
Gearbox with limiter 47

• Functional Main Frame W/Cutout

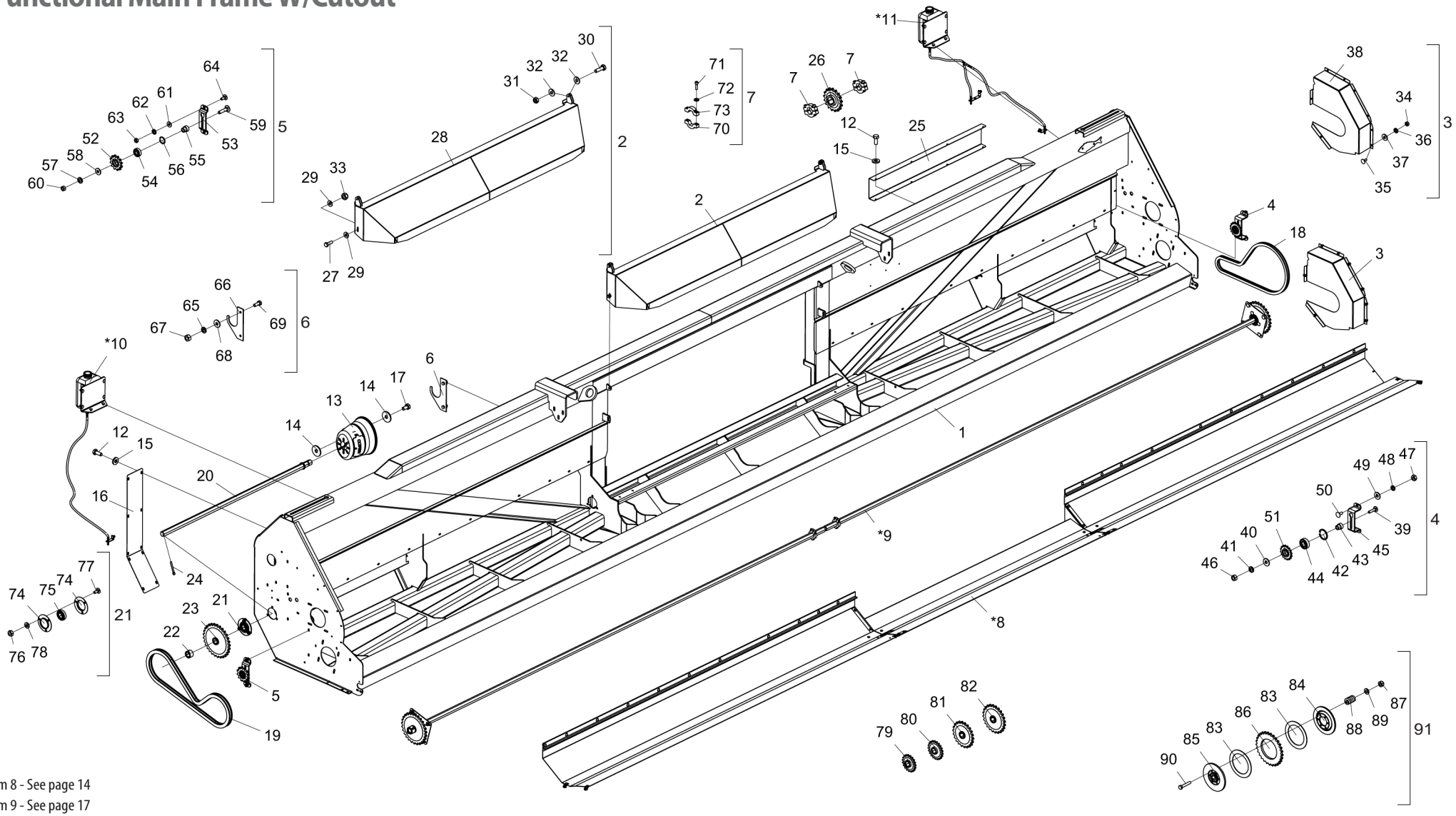

* Item 8 - See page 14
* Item 9 - See page 17
* Items 10 and 11 - See page 41

• Table Functional Main Frame W/Cutout

Item	Code	Product description	All	3260mm	3710mm	4160mm	4650mm	5060mm	5510mm	5960mm	6410mm	6860mm	7310mm	7760mm	8170mm	8615mm
1	5404010616-5	Main Frame W/Cutout(3260mm)		1												
1	5404010617-3	Main Frame W/Cutout(3710mm)			1											
1	5404010618-1	Main Frame W/Cutout(4160mm)				1										
1	5404010619-0	Main Frame W/Cutout(4650mm)					1									
1	5404010620-3	Main Frame W/Cutout(5060mm)						1								
1	5404010621-1	Main Frame W/Cutout(5510mm)							1							
1	5404010622-0	Main Frame W/Cutout(5960mm)								1						
1	5404010623-8	Main Frame W/Cutout(6410mm)									1					
1	5404010624-6	Main Frame W/Cutout(6860mm)										1				
1	5404010625-4	Main Frame W/Cutout(7310mm)											1			
1	5404010626-2	Main Frame W/Cutout(7760mm)												1		
1	5404010852-4	Main Frame W/Cutout(8170mm)													1	
1	5404010849-4	Main Frame W/Cutout(8615mm)														1
2	5207010010-0	Complete Deflector		1	1	1	1	1	1	1	1	1	1	1		
3	5464010123-0	Complete Transmission Protection	1													
4	5268010730-0	Stretcher Of Gear 16 Teeth	1													
5	5268010731-9	Stretcher Of Gear 12 Teeth	2													
6	5136012949-0	Support Plate Of Complete Cardan	2													
7	5460010016-8	Shaft Clamp 1.1/4" Complete	2													
*8	5464010163-9	Complete Protection Frame 3260mm		1												
*8	5464010164-7	Complete Protection Frame 3710mm			1											
*8	5464010165-5	Complete Protection Frame 4160mm				1										
*8	5464010119-1	Complete Protection Frame 4650mm					1									
*8	5464010166-3	Complete Protection Frame 5060mm						1								
*8	5464010167-1	Complete Protection Frame 5510mm							1							
*8	5464010168-0	Complete Protection Frame 5960mm								1						
*8	5464010169-8	Complete Protection Frame 6410mm									1					
*8	5464010170-1	Complete Protection Frame 6860mm										1				
*8	5464010171-0	Complete Protection Frame 7310mm (Potenza)											1			
*8	5464010172-8	Complete Protection Frame 7760mm												1		
*8	5464010500-6	Complete Protection for Main Frame 8170mm													1	
*8	5464010489-1	Complete Protection for Main Frame 8615mm														1
*9	5232011017-3	Complete Shaft For Main Frame 3260mm		1												
*9	5232011018-1	Complete Shaft For Main Frame 3710mm			1											
*9	5232011019-0	Complete Shaft For Main Frame 4160mm				1										
*9	5232011016-5	Complete Shaft For Main Frame 4650mm					1									
*9	5232011020-3	Complete Shaft For Main Frame 5060mm						1								
*9	5232011021-1	Complete Shaft For Main Frame 5510mm							1							
*9	5232011022-0	Complete Shaft For Main Frame 5960mm								1						
*9	5232011023-8	Complete Shaft For Main Frame 6410mm									1					
*9	5232011024-6	Complete Shaft For Main Frame 6860mm										1				
*9	5232011025-4	Complete Shaft For Main Frame 7310mm											1			
*9	5232011026-2	Complete Shaft For Main Frame 7760mm												1		
*9	5232011949-9	Complete Shaft For Main Frame 8170mm													1	
*9	5232011929-4	Complete Shaft For Main Frame 8615mm														1

BALDAN

• Table Functional Main Frame W/Cutout

Item	Code	Product description	All	3260mm	3710mm	4160mm	4650mm	5060mm	5510mm	5960mm	6410mm	6860mm	7310mm	7760mm	8170mm	8615mm
*10	5208011616-0	Complete Right Oil Hopper	1													
*11	5208011615-2	Complete Left Oil Hopper	1													
12	6020311269-9	Hexagonal Head Bolt M8 X 1,25 X 20mm Cl8.8 Rt		10	10	10	10	10	10	10	10	10	26	26	26	26
13	6020310601-0	Protection Kit	2													
14	5024010655-5	Smooth Washer Ø11,5 X Ø38 X 3,00mm	12													
15	5024010073-5	Smooth Washer Ø8,5 X Ø20 X 2,00mm		10	10	10	10	10	10	10	10	10	26	26	26	26
16	5136015982-9	Plate Of Rear Protection	2													
17	6020311013-0	Hexagonal Head Bolt M10 X 1,50 X 20mm Cl8.8 Rt	6													
18	6020055027-0	Chain (Asa 60) 86 Links + Reduction	1													
19	6020055028-8	Chain (Asa 80) 73 Links + Amendment	2													
20	5232011011-4	Hexagonal Shaft With Washer		2	2	2	2	2	2	2	2	2				
20	5232011133-1	Hexagonal Shaft With Washer											2	2		
20	5232011950-2	Hexagonal Shaft 1453mm With Washer													2	
20	5232011930-8	Hexagonal Shaft 1676mm With Washer														2
21	5368010578-9	Plate Bearing		4	4	4	4	4	4	4	4	4	4	4	2	2
22	5080010795-1	Bushing With Hexagonal Hole Of Ø32,20mm	2													
23	5256010211-9	Complete Gear 29 Teeth(Asa 80)	2													
24	6020050124-4	Cotterpin 3/8" X 3"	2													
25	5572016683-5	"U" Beam de 156 X 50 X 894mm											2	2		
25	5572016692-4	"U" Beam de 156 X 50 X 1097,5mm													2	
25	5572016676-2	"U" Beam 156 X 50 X 1320mm														2
26	5256010209-7	Complete Gear 17 Teeth(Asa 60)	1													
27	6020310448-3	Hexagonal Head Bolt M8 X 1,25 X 25mm Cl8.8 Rt		2	2	2	2	2	2	2	2	2	2	2		
28	5207010011-8	Deflector		1	1	1	1	1	1	1	1	1	1	1		
29	5024010073-5	Smooth Washer Ø8,5 X Ø20 X 2,00mm		4	4	4	4	4	4	4	4	4	4	4		
30	6020310437-8	Hexagonal Head Bolt M10 X 1,50 X 35mm Cl8.8 Rt		2	2	2	2	2	2	2	2	2	2	2		
31	6020317435-0	Self-Locking Nut With Nylon M10 X 1,50 Ma Cl8 Ch.17mm H.10,00mm		2	2	2	2	2	2	2	2	2	2	2		
32	5024010075-1	Smooth Washer Ø10,3 X Ø25 X 2,00mm		4	4	4	4	4	4	4	4	4	4	4		
33	6020317449-0	Self-Locking Nut With Nylon Low M8 X 1,25 Ma Cl8 Ch.13mm H.8,00mm		2	2	2	2	2	2	2	2	2	2	2		
34	6020311257-5	Hexagonal Nut M6 X 1,00 Ma Cl8 Ch.10mm H.5,00mm	8													
35	6020317455-4	French Head Bolt M6 X 1,00 X 16mm Cl8.8 Rp	8													
36	6020010122-0	Pressure Washer M6 Media	8													
37	5024010161-8	Smooth Washer Ø7 X Ø18 X 2,00mm	8													
38	5464010124-8	Transmission Protection Of Caracol	1													
39	6020317447-3	French Head Bolt M12 X 1,75 X 55mm Cl8.8 Rp	1													
40	5024010068-9	Smooth Washer Ø13,3 X Ø35,5 X 3,00mm	1													
41	6020010395-8	Pressure Washer M12 Media	1													
42	6020010287-0	Retaining Ring I-48	1													
43	5080010794-3	Back Bushing	1													
44	6020350052-4	Bearing 6204-Zz (1º Line)	1													
45	5136012947-4	Fixation Plate Of Stretcher	1													
46	6020310820-9	Hexagonal Nut M12 X 1,75 Ma Cl8 Ch.19mm H.10,00mm	1													
47	6020310822-5	Hexagonal Nut M10 X 1,50 Ma Cl8 Ch.17mm H.8,00mm	2													
48	6020010394-0	Pressure Washer M10 Media	2													
49	5024010075-1	Smooth Washer Ø10,3 X Ø25 X 2,00mm	2													
50	6020317445-7	French Head Bolt M10 X 1,50 X 25mm Cl8.8 Rt	2													
51	5256010219-4	Gear 16 Teeth(Asa 60)	1													

• Table Functional Main Frame W/Cutout

Item	Code	Product description	All	3260mm	3710mm	4160mm	4650mm	5060mm	5510mm	5960mm	6410mm	6860mm	7310mm	7760mm	8170mm	8615mm
52	5256010220-8	Gear 12 Teeth	2													
53	5136012948-2	Fixation Plate Of Stretcher	2													
54	6020350052-4	Bearing 6204-Zz (1º Line)	2													
55	5080010794-3	Back Bushing	2													
56	6020010287-0	Retaining Ring I-48	2													
57	6020010395-8	Pressure Washer M12 Media	2													
58	5024010068-9	Smooth Washer Ø13,3 X Ø35,5 X 3,00mm	2													
59	6020317447-3	French Head Bolt M12 X 1,75 X 55mm Cl8.8 Rp	2													
60	6020310820-9	Hexagonal Nut M12 X 1,75 Ma Cl8 Ch.19mm H.10,00mm	2													
61	5024010075-1	Smooth Washer Ø10,3 X Ø25 X 2,00mm	4													
62	6020010394-0	Pressure Washer M10 Media	4													
63	6020310822-5	Hexagonal Nut M10 X 1,50 Ma Cl8 Ch.17mm H.8,00mm	4													
64	6020317445-7	French Head Bolt M10 X 1,50 X 25mm Cl8.8 Rt	4													
65	6020010395-8	Pressure Washer M12 Media	4													
66	5136012950-4	Support Plate Of Cardan	2													
67	6020310820-9	Hexagonal Nut M12 X 1,75 Ma Cl8 Ch.19mm H.10,00mm	4													
68	5024010068-9	Smooth Washer Ø13,3 X Ø35,5 X 3,00mm	4													
69	6020310211-1	Hexagonal Head Bolt M12 X 1,75 X 30mm Cl8.8 Rt	4													
70	5460010015-0	Upper Clamp For Shaft 1.1/4"	2													
71	6020310111-5	Allen Bolt C/C M8 X 1,25 X 30mm Cl12.9 Rt (Phosphated)	4													
72	6020010004-5	Pressure Washer M8 Media	4													
73	5460010014-1	Lower Clamp For Shaft 1.1/4"	2													
74	6020250496-8	Steel Plate Bearing 03 72Msb	2													
75	6020350898-3	Bearing (Ina 1º Line) Gsk104-207-Krr-B-As2/V-Ah01	1													
76	6020310822-5	Hexagonal Nut M10 X 1,50 Ma Cl8 Ch.17mm H.8,00mm	3													
77	6020317445-7	French Head Bolt M10 X 1,50 X 25mm Cl8.8 Rt	3													
78	5024010466-8	Smooth Washer Ø10,3 X Ø20 X 2,00mm	3													
79	5256010225-9	Complete Gear 19 Teeth(Asa 60)	1													
80	5256010373-5	Complete Gear 21 Teeth(Asa 60)	1													
81	5256010228-3	Complete Gear 22 Teeth(Asa 80)	2													
82	5256010213-5	Complete Gear 24 Teeth(Asa 80)	1													
		Optional														
83	5024010475-7	Bronze Washer	2													
84	5284010084-7	Small Flange (Lateral)	1													
85	5284010085-5	Large Flange (Lateral)	1													
86	5256010218-6	Gear 29 Teeth(Asa 80)	1													
87	6020317435-0	Self-Locking Nut With Nylon M10 X 1,50 Ma Cl8 Ch.17mm H.10,00mm	6													
88	6020250495-0	Helical Spring Ø11,5 X Ø21,5 X 32mm	6													
89	5024010466-8	Smooth Washer Ø10,3 X Ø20 X 2,00mm	6													
90	6020310151-4	Hexagonal Head Bolt M10 X 1,50 X 60mm Cl8,8 Rt	6													
91	5256010217-8	Gear 29 Teeth With Clutch	1													

• Functional Main Frame W/Cutout For Plug

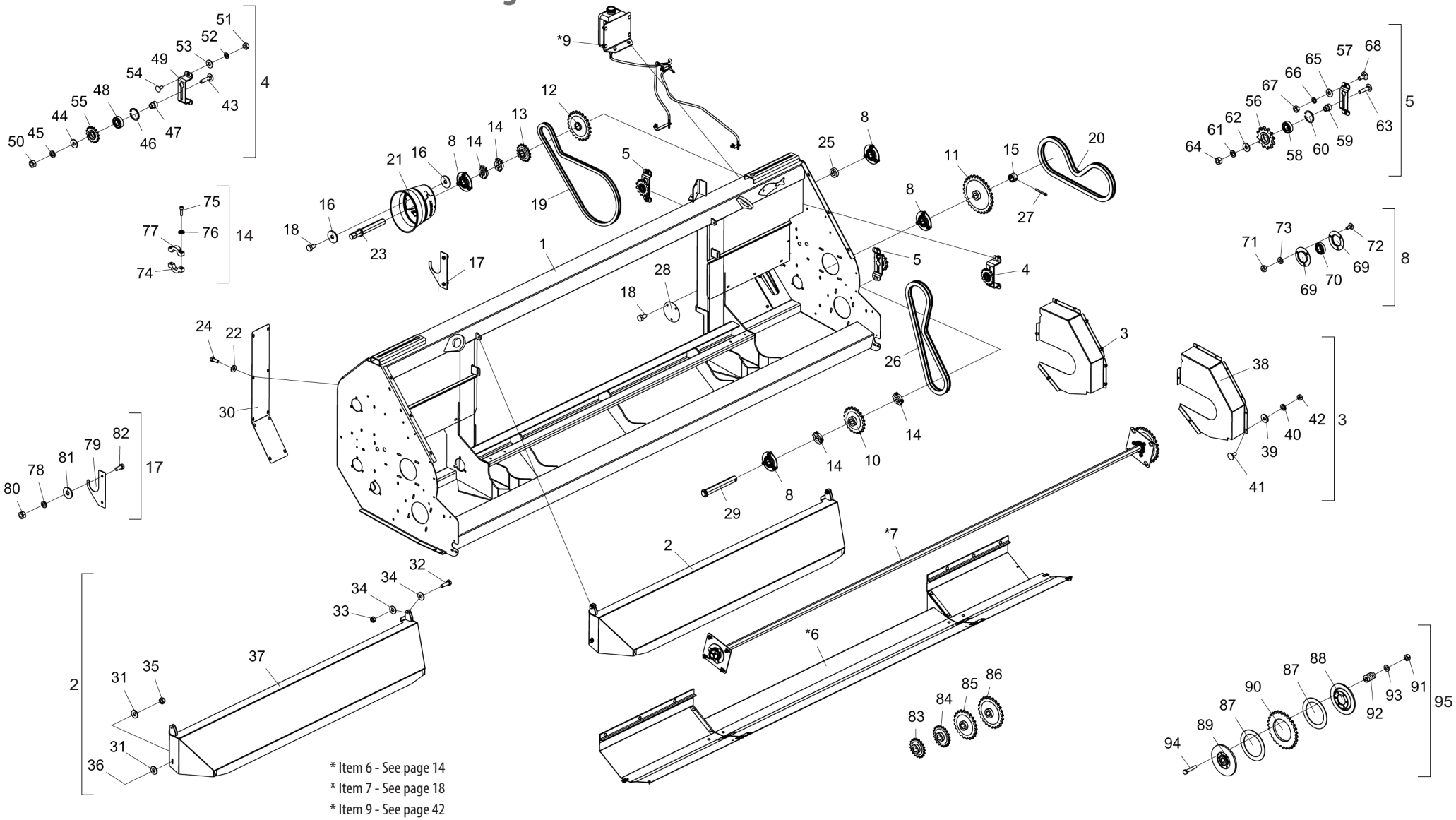

• Table Functional Main Frame W/Cutout For Plug

Item	Code	Product description	All	Upper Plug 3260mm	Lower Plug 3710mm	Upper Plug 3710mm	Upper Plug 4160mm	Upper Plug 4650mm
1	5404010616-5	Main Frame W/Cutout(3260mm)		1				
1	5404010617-3	Main Frame W/Cutout(3710mm)			1	1		
1	5404010618-1	Main Frame W/Cutout(4160mm)					1	
1	5404010619-0	Main Frame W/Cutout(4650mm)						1
2	5207010010-0	Complete Deflector	1					
3	5464010123-0	Complete Transmission Protection	1					
4	5268010730-0	Stretcher Of Gear 16 Teeth	1					
5	5268010731-9	Stretcher Of Gear 12 Teeth		2	1	2	2	2
*6	5464010163-9	Complete Protection Frame 3260mm		1				
*6	5464010164-7	Complete Protection Frame 3710mm			1	1		
*6	5464010165-5	Complete Protection Frame 4160mm					1	
*6	5464010119-1	Complete Protection Frame 4650mm						1
*7	5232011086-6	Complete Shaft For Main Frame 3260mm		1				
*7	5232011085-8	Complete Shaft For Main Frame 3710mm			1	1		
*7	5232011335-0	Complete Shaft For Main Frame 4160mm					1	
*7	5232011337-7	Complete Shaft For Main Frame 4650mm						1
8	5368010578-9	Plate Bearing		4	2	4	4	4
*9	5208011615-2	Complete Left Oil Hopper			1			
*9	5208011627-6	Complete Left Oil Hopper		1		1	1	1
10	5256010227-5	Complete Gear 20 Teeth(Asa 80)		1		1	1	1
11	5256010211-9	Complete Gear 29 Teeth(Asa 80)	1					
12	5256010228-3	Complete Gear 22 Teeth(Asa 80)		1		1	1	1
13	5256010209-7	Complete Gear 17 Teeth(Asa 60)	1					
14	5460010016-8	Shaft Clamp 1.1/4" Complete		4	2	4	4	4
15	5080010795-1	Bushing With Hexagonal Hole Of Ø32,20mm	1					
16	5024010655-5	Smooth Washer Ø11,5 X Ø38 X 3,00mm	6					
17	5136012949-0	Support Plate Of Complete Cardan	2					
18	6020311013-0	Hexagonal Head Bolt M10 X 1,50 X 20mm Cl8.8 Rt		6	3	6	6	6
19	6020055027-0	Chain (Asa 60) 86 Links + Reduction			1			
19	6020055041-5	Chain (Asa 60) 95 Links + Amendment		1		1	1	1

Item	Code	Product description	All	Upper Plug 3260mm	Lower Plug 3710mm	Upper Plug 3710mm	Upper Plug 4160mm	Upper Plug 4650mm
20	6020055042-3	Chain (Asa 80) 61 Links + Amendment		1		1	1	1
21	6020310601-0	Protection Kit	1					
22	5024010073-5	Smooth Washer Ø8,5 X Ø20 X 2,00mm	5					
23	5232011011-4	Hexagonal Shaft With Washer			1			
23	5232011062-9	Hexagonal Shaft 270mm With Washer		1		1	1	1
24	6020311269-9	Hexagonal Head Bolt M8 X 1,25 X 20mm Cl8.8 Rt	5					
25	5080010809-5	Bushing With Hexagonal Hole Of Ø32,2mm		1		1	1	1
26	6020055028-8	Chain (Asa 80) 73 Links + Amendment			1			
26	6020055043-1	Chain (Asa 80) 63 Links + Amendment		1		1	1	1
27	6020050124-4	Cotterpin 3/8" X 3"	1					
28	5538014954-0	Cover Of Ø130 X 2,00mm		1		1	1	1
29	5232011969-3	Hexagonal Shaft With Washer		1		1	1	1
30	5136015982-9	Plate Of Rear Protection	1					
31	5024010073-5	Smooth Washer Ø8,5 X Ø20 X 2,00mm	4					
32	6020310437-8	Hexagonal Head Bolt M10 X 1,50 X 35mm Cl8.8 Rt	2					
33	6020317435-0	Self-Locking Nut With Nylon M10 X 1,50 Ma Cl8 Ch.17mm H.10,00mm	2					
34	5024010075-1	Smooth Washer Ø10,3 X Ø25 X 2,00mm	4					
35	6020317449-0	Self-Locking Nut With Nylon Low M8 X 1,25 Ma Cl8 Ch.13mm H.8,00mm	2					
36	6020310448-3	Hexagonal Head Bolt M8 X 1,25 X 25mm Cl8.8 Rt	2					
37	5207010011-8	Deflector	1					
38	5464010124-8	Transmission Protection Of Caracol	1					
39	5024010161-8	Smooth Washer Ø7 X Ø18 X 2,00mm	8					
40	6020010122-0	Pressure Washer M6 Media	8					
41	6020317455-4	French Head Bolt M6 X 1,00 X 16mm Cl8.8 Rp	8					
42	6020311257-5	Hexagonal Nut M6 X 1,00 Ma Cl8 Ch.10mm H.5,00mm	8					
43	6020317447-3	French Head Bolt M12 X 1,75 X 55mm Cl8.8 Rp	1					
44	5024010068-9	Smooth Washer Ø13,3 X Ø35,5 X 3,00mm	1					
45	6020010395-8	Pressure Washer M12 Media	1					
46	6020010287-0	Retaining Ring I-48	1					
47	5080010794-3	Back Bushing	1					

BALDAN

• Table Functional Main Frame W/Cutout For Plug

Item	Code	Product description	All	Upper Plug 3260mm	Lower Plug 3710mm	Upper Plug 3710mm	Upper Plug 4160mm	Upper Plug 4650mm
48	6020350052-4	Bearing 6204-Zz (1º Line)	1					
49	5136012947-4	Fixation Plate Of Stretcher	1					
50	6020310820-9	Hexagonal Nut M12 X 1,75 Ma Cl8 Ch.19mm H.10,00mm	1					
51	6020310822-5	Hexagonal Nut M10 X 1,50 Ma Cl8 Ch.17mm H.8,00mm	2					
52	6020010394-0	Pressure Washer M10 Media	2					
53	5024010075-1	Smooth Washer Ø10,3 X Ø25 X 2,00mm	2					
54	6020317445-7	French Head Bolt M10 X 1,50 X 25mm Cl8.8 Rt	2					
55	5256010219-4	Gear 16 Teeth(Asa 60)	1					
56	5256010220-8	Gear 12 Teeth		2	1	2	2	2
57	5136012948-2	Fixation Plate Of Stretcher		2	1	2	2	2
58	6020350052-4	Bearing 6204-Zz (1º Line)		2	1	2	2	2
59	5080010794-3	Back Bushing		2	1	2	2	2
60	6020010287-0	Retaining Ring I-48		2	1	2	2	2
61	6020010395-8	Pressure Washer M12 Media		2	1	2	2	2
62	5024010068-9	Smooth Washer Ø13,3 X Ø35,5 X 3,00mm		2	1	2	2	2
63	6020317447-3	French Head Bolt M12 X 1,75 X 55mm Cl8.8 Rp		2	1	2	2	2
64	6020310820-9	Hexagonal Nut M12 X 1,75 Ma Cl8 Ch.19mm H.10,00mm		2	1	2	2	2
65	5024010075-1	Smooth Washer Ø10,3 X Ø25 X 2,00mm		4	2	4	4	4
66	6020010394-0	Pressure Washer M10 Media		4	2	4	4	4
67	6020310822-5	Hexagonal Nut M10 X 1,50 Ma Cl8 Ch.17mm H.8,00mm		4	2	4	4	4
68	6020317445-7	French Head Bolt M10 X 1,50 X 25mm Cl8.8 Rt		4	2	4	4	4
69	6020250496-8	Steel Plate Bearing 03 72Msb		8	4	8	8	8
70	6020350898-3	Bearing (Ina 1º Line) Gsk104-207-Krr-B-As2/V-Ah01		4	2	4	4	4
71	6020310822-5	Hexagonal Nut M10 X 1,50 Ma Cl8 Ch.17mm H.8,00mm		12	6	12	12	12
72	6020317445-7	French Head Bolt M10 X 1,50 X 25mm Cl8.8 Rt		12	6	12	12	12
73	5024010466-8	Smooth Washer Ø10,3 X Ø20 X 2,00mm		12	6	12	12	12
74	5460010014-1	Lower Clamp For Shaft 1.1/4"		8	4	8	8	8
75	6020310111-5	Allen Bolt C/C M8 X 1,25 X 30mm Cl12.9 Rt (Phosphated)		16	8	16	16	16
76	6020010004-5	Pressure Washer M8 Media		16	8	16	16	16
77	5460010015-0	Upper Clamp For Shaft 1.1/4"		8	4	8	8	8

Item	Code	Product description	All	Upper Plug 3260mm	Lower Plug 3710mm	Upper Plug 3710mm	Upper Plug 4160mm	Upper Plug 4650mm
78	6020010395-8	Pressure Washer M12 Media	4					
79	5136012950-4	Support Plate Of Cardan	2					
80	6020310820-9	Hexagonal Nut M12 X 1,75 Ma Cl8 Ch.19mm H.10,00mm	4					
81	5024010068-9	Smooth Washer Ø13,3 X Ø35,5 X 3,00mm	4					
82	6020310211-1	Hexagonal Head Bolt M12 X 1,75 X 30mm Cl8.8 Rt	4					
83	5256010225-9	Complete Gear 19 Teeth(Asa 60)	1					
84	5256010373-5	Complete Gear 21 Teeth(Asa 60)	1					
85	5256010228-3	Complete Gear 22 Teeth(Asa 80)	2					
86	5256010213-5	Complete Gear 24 Teeth(Asa 80)	1					
		Optional						
87	5024010475-7	Bronze Washer	2					
88	5284010084-7	Small Flange (Lateral)	1					
89	5284010085-5	Large Flange (Lateral)	1					
90	5256010218-6	Gear 29 Teeth(Asa 80)	1					
91	6020317435-0	Self-Locking Nut With Nylon M10 X 1,50 Ma Cl8 Ch.17mm H.10,00mm	6					
92	6020250495-0	Helical Spring Ø11,5 X Ø21,5 X 32mm	6					
93	5024010466-8	Smooth Washer Ø10,3 X Ø20 X 2,00mm	6					
94	6020310151-4	Hexagonal Head Bolt M10 X 1,50 X 60mm Cl8,8 Rt	6					
95	5256010217-8	Gear 29 Teeth With Clutch	1					

• Functional Main Frame For Plug

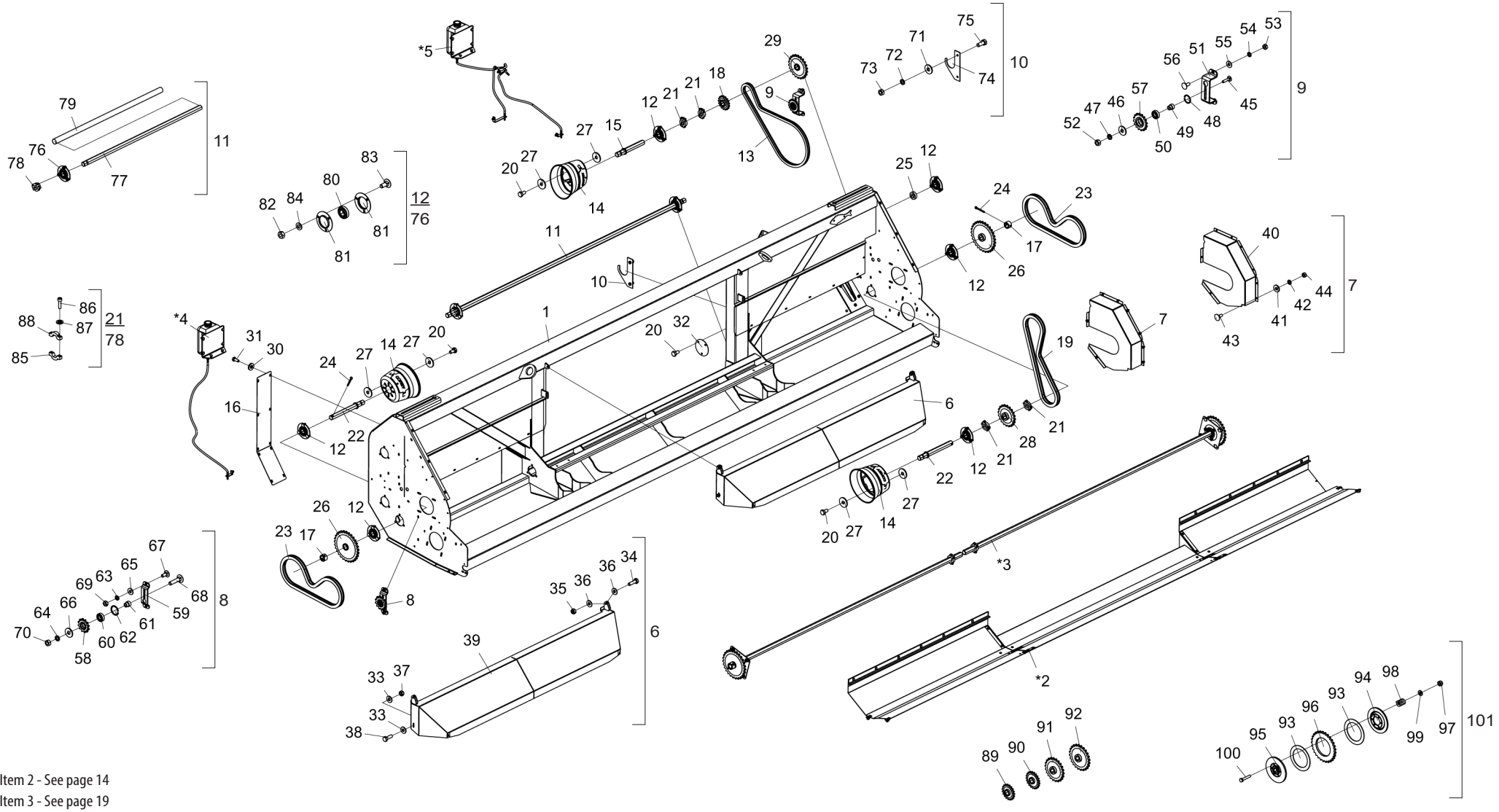

* Item 2 - See page 14
* Item 3 - See page 19
* Items 4 and 5 - See page 43

BALDAN

• Table Functional Main Frame For Plug

Item	Code	Product description	All	5060mm	5510mm	5960mm
1	5404010642-4	Main Frame 5060mm(Potenza)		1		
1	5404010643-2	Main Frame 5510mm(Potenza)			1	
1	5404010644-0	Main Frame 5960mm(Potenza)				1
*2	5464010166-3	Complete Protection Frame 5060mm		1		
*2	5464010167-1	Complete Protection Frame 5510mm			1	
*2	5464010168-0	Complete Protection Frame 5960mm				1
*3	5232011020-3	Complete Shaft For Main Frame 5060mm		1		
*3	5232011021-1	Complete Shaft For Main Frame 5510mm			1	
*3	5232011022-0	Complete Shaft For Main Frame 5960mm				1
*4	5208011616-0	Complete Right Oil Hopper	1			
*5	5208011627-6	Complete Left Oil Hopper	1			
6	5207010010-0	Complete Deflector	1			
7	5464010123-0	Complete Transmission Protection	1			
8	5268010731-9	Stretcher Of Gear 12 Teeth	3			
9	5268010730-0	Stretcher Of Gear 16 Teeth	1			
10	5136012949-0	Support Plate Of Complete Cardan	2			
11	5232011064-5	Shaft 1.1/4" Complete	1			
12	5368010578-9	Plate Bearing	6			
13	6020055041-5	Chain (Asa 60) 95 Links + Amendment	1			
14	6020310601-0	Protection Kit	3			
15	5232011062-9	Hexagonal Shaft 270mm With Washer	1			
16	5136015982-9	Plate Of Rear Protection	2			
17	5080010795-1	Bushing With Hexagonal Hole Of Ø32,20mm	2			
18	5256010209-7	Complete Gear 17 Teeth(Asa 60)	1			
19	6020055043-1	Chain (Asa 80) 63 Links + Amendment	1			
20	6020311013-0	Hexagonal Head Bolt M10 X 1,50 X 20mm Cl8.8 Rt	15			
21	5460010016-8	Shaft Clamp 1.1/4" Complete	4			
22	5232011011-4	Hexagonal Shaft With Washer	2			
23	6020055042-3	Chain (Asa 80) 61 Links + Amendment	2			
24	6020050124-4	Cotterpin 3/8" X 3"	2			
25	5080010809-5	Bushing With Hexagonal Hole Of Ø32,2mm	1			
26	5256010211-9	Complete Gear 29 Teeth(Asa 80)	2			
27	5024010655-5	Smooth Washer Ø11,5 X Ø38 X 3,00mm	18			
28	5256010227-5	Complete Gear 20 Teeth(Asa 80)	1			
29	5256010228-3	Complete Gear 22 Teeth(Asa 80)	1			

Item	Code	Product description	All	5060mm	5510mm	5960mm
30	5024010073-5	Smooth Washer Ø8,5 X Ø20 X 2,00mm	10			
31	6020311269-9	Hexagonal Head Bolt M8 X 1,25 X 20mm Cl8.8 Rt	10			
32	5538014954-0	Cover Of Ø130 X 2,00mm	2			
33	5024010073-5	Smooth Washer Ø8,5 X Ø20 X 2,00mm	4			
34	6020310437-8	Hexagonal Head Bolt M10 X 1,50 X 35mm Cl8.8 Rt	2			
35	6020317435-0	Self-Locking Nut With Nylon M10 X 1,50 Ma Cl8 Ch.17mm H.10,00mm	2			
36	5024010075-1	Smooth Washer Ø10,3 X Ø25 X 2,00mm	4			
37	6020317449-0	Self-Locking Nut With Nylon Low M8 X 1,25 Ma Cl8 Ch.13mm H.8,00mm	2			
38	6020310448-3	Hexagonal Head Bolt M8 X 1,25 X 25mm Cl8.8 Rt	2			
39	5207010011-8	Deflector	1			
40	5464010124-8	Transmission Protection Of Caracol	1			
41	5024010161-8	Smooth Washer Ø7 X Ø18 X 2,00mm	8			
42	6020010122-0	Pressure Washer M6 Media	8			
43	6020317455-4	French Head Bolt M6 X 1,00 X 16mm Cl8.8 Rp	8			
44	6020311257-5	Hexagonal Nut M6 X 1,00 Ma Cl8 Ch.10mm H.5,00mm	8			
45	6020317447-3	French Head Bolt M12 X 1,75 X 55mm Cl8.8 Rp	1			
46	5024010068-9	Smooth Washer Ø13,3 X Ø35,5 X 3,00mm	1			
47	6020010395-8	Pressure Washer M12 Media	1			
48	6020010287-0	Retaining Ring I-48	1			
49	5080010794-3	Back Bushing	1			
50	6020350052-4	Bearing 6204-Zz (1º Line)	1			
51	5136012947-4	Fixation Plate Of Stretcher	1			
52	6020310820-9	Hexagonal Nut M12 X 1,75 Ma Cl8 Ch.19mm H.10,00mm	1			
53	6020310822-5	Hexagonal Nut M10 X 1,50 Ma Cl8 Ch.17mm H.8,00mm	2			
54	6020010394-0	Pressure Washer M10 Media	2			
55	5024010075-1	Smooth Washer Ø10,3 X Ø25 X 2,00mm	2			
56	6020317445-7	French Head Bolt M10 X 1,50 X 25mm Cl8.8 Rt	2			
57	5256010219-4	Gear 16 Teeth(Asa 60)	1			
58	5256010220-8	Gear 12 Teeth	3			
59	5136012948-2	Fixation Plate Of Stretcher	3			
60	6020350052-4	Bearing 6204-Zz (1º Line)	3			
61	5080010794-3	Back Bushing	3			
62	6020010287-0	Retaining Ring I-48	3			
63	6020010394-0	Pressure Washer M10 Media	6			
64	6020010395-8	Pressure Washer M12 Media	3			

• Table Functional Main Frame For Plug

Item	Code	Product description	All	5060mm	5510mm	5960mm
65	5024010075-1	Smooth Washer Ø10,3 X Ø25 X 2,00mm	6			
66	5024010068-9	Smooth Washer Ø13,3 X Ø35,5 X 3,00mm	3			
67	6020317445-7	French Head Bolt M10 X 1,50 X 25mm Cl8.8 Rt	6			
68	6020317447-3	French Head Bolt M12 X 1,75 X 55mm Cl8.8 Rp	3			
69	6020310822-5	Hexagonal Nut M10 X 1,50 Ma Cl8 Ch.17mm H.8,00mm	6			
70	6020310820-9	Hexagonal Nut M12 X 1,75 Ma Cl8 Ch.19mm H.10,00mm	3			
71	5024010068-9	Smooth Washer Ø13,3 X Ø35,5 X 3,00mm	4			
72	6020010395-8	Pressure Washer M12 Media	4			
73	6020310820-9	Hexagonal Nut M12 X 1,75 Ma Cl8 Ch.19mm H.10,00mm	4			
74	5136012950-4	Support Plate Of Cardan	2			
75	6020310211-1	Hexagonal Head Bolt M12 X 1,75 X 30mm Cl8.8 Rt	4			
76	5368010578-9	Plate Bearing	2			
77	5232011065-3	Hexagonal Shaft 1.1/4" X 2548mm	1			
78	5460010016-8	Shaft Clamp 1.1/4" Complete	2			
79	5552010429-0	Tube Of Ø40 X Ø38 X 2318mm	1			
80	6020350898-3	Bearing (Ina 1º Line) Gsk104-207-Krr-B-As2/V-Ah01	8			
81	6020250496-8	Steel Plate Bearing 03 72Msb	16			
82	6020310822-5	Hexagonal Nut M10 X 1,50 Ma Cl8 Ch.17mm H.8,00mm	24			
83	6020317445-7	French Head Bolt M10 X 1,50 X 25mm Cl8.8 Rt	24			
84	5024010466-8	Smooth Washer Ø10,3 X Ø20 X 2,00mm	24			
85	5460010014-1	Lower Clamp For Shaft 1.1/4"	1			
86	6020310111-5	Allen Bolt C/C M8 X 1,25 X 30mm Cl12.9 Rt (Phosphated)	2			
87	6020010004-5	Pressure Washer M8 Media	2			
88	5460010015-0	Upper Clamp For Shaft 1.1/4"	1			
89	5256010225-9	Complete Gear 19 Teeth(Asa 60)	1			
90	5256010373-5	Complete Gear 21 Teeth(Asa 60)	1			
91	5256010228-3	Complete Gear 22 Teeth(Asa 80)	2			
92	5256010213-5	Complete Gear 24 Teeth(Asa 80)	2			
		Optional				
93	5024010475-7	Bronze Washer	2			
94	5284010084-7	Small Flange (Lateral)	1			
95	5284010085-5	Large Flange (Lateral)	1			
96	5256010218-6	Gear 29 Teeth(Asa 80)	1			
97	6020317435-0	Self-Locking Nut With Nylon M10 X 1,50 Ma Cl8 Ch.17mm H.10,00mm	6			
98	6020250495-0	Helical Spring Ø11,5 X Ø21,5 X 32mm	6			

Item	Code	Product description	All	5060mm	5510mm	5960mm
99	5024010466-8	Smooth Washer Ø10,3 X Ø20 X 2,00mm	6			
100	6020310151-4	Hexagonal Head Bolt M10 X 1,50 X 60mm Cl8,8 Rt	6			
101	5256010217-8	Gear 29 Teeth With Clutch	1			

• Protection For Main Frame

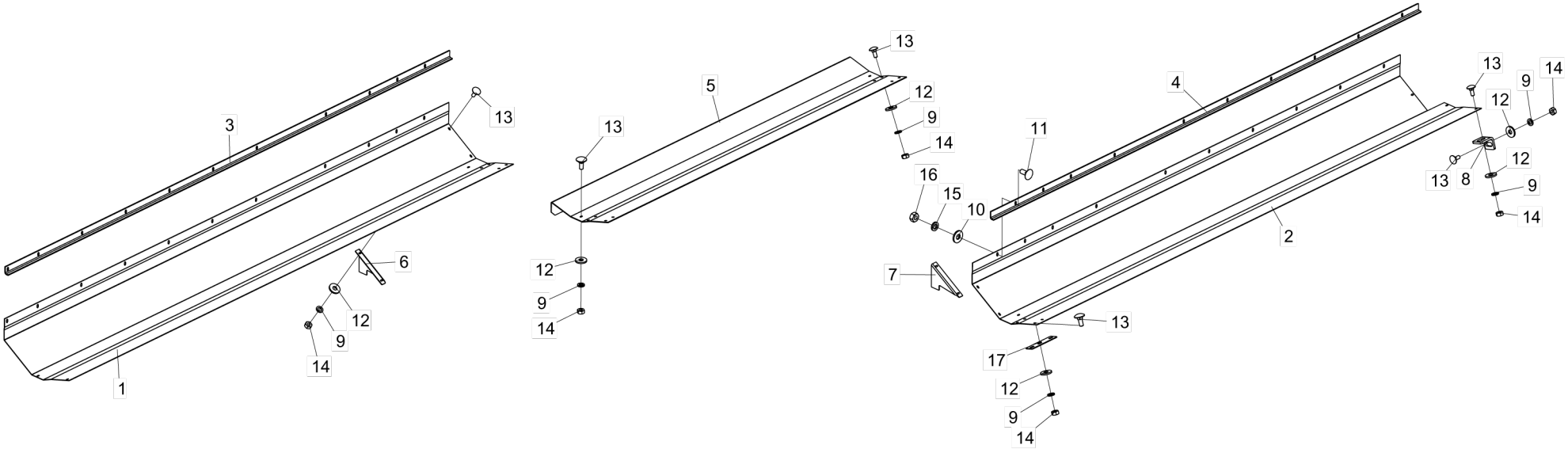

• Table Protection For Main Frame

Item	Code	Product description	All	3260mm	3710mm	4160mm	4650mm	5060mm	5510mm	5960mm	6410mm	6860mm	7310mm	7760mm	8170mm	8615mm
1	5464010132-9	Right Lateral Protection Fron Main Frame 3260mm		1												
1	5464010133-7	Right Lateral Protection Fron Main Frame 3710mm			1											
1	5464010135-3	Right Lateral Protection Fron Main Frame 4160mm				1										
1	5464010121-3	Right Lateral Protection Fron Main Frame 4650mm					1									
1	5464010134-5	Right Lateral Protection Fron Main Frame 5060mm						1								
1	5464010136-1	Right Lateral Protection Fron Main Frame 5510mm							1							
1	5464010137-0	Right Lateral Protection Fron Main Frame 5960mm								1						
1	5464010138-8	Right Lateral Protection Fron Main Frame 6410mm									1					
1	5464010139-6	Right Lateral Protection Fron Main Frame 6860mm										1				
1	5464010140-0	Right Lateral Protection Fron Main Frame 7310mm (Potenza)											1			
1	5464010141-8	Right Lateral Protection Fron Main Frame 7760mm (Potenza)												1		
1	5464010501-4	Lateral Right Protection for Main Frame 8170mm													1	
1	5464010488-3	Lateral Right Protection for Main Frame 8615mm														1
2	5464010145-0	Left Lateral Protection Fron Main Frame 3260mm		1												
2	5464010146-9	Left Lateral Protection Fron Main Frame 3710mm			1											
2	5464010148-5	Left Lateral Protection Fron Main Frame 4160mm				1										
2	5464010122-1	Left Lateral Protection Fron Main Frame 4650mm					1									
2	5464010147-7	Left Lateral Protection Fron Main Frame 5060mm						1								
2	5464010149-3	Left Lateral Protection Fron Main Frame 5510mm							1							
2	5464010150-7	Left Lateral Protection Fron Main Frame 5960mm								1						
2	5464010151-5	Left Lateral Protection Fron Main Frame 6410mm									1					
2	5464010152-3	Left Lateral Protection Fron Main Frame 6860mm										1				
2	5464010153-1	Left Lateral Protection Fron Main Frame 7310mm (Potenza)											1			
2	5464010154-0	Left Lateral Protection Fron Main Frame 7760mm (Potenza)												1		
2	5464010502-2	Lateral Left Protection for Main Frame 8170mm													1	
2	5464010487-5	Lateral Left Protection for Main Frame 8615mm														1
3	5572015123-4	"L" Beam 22 X 40 X 597mm		1												
3	5572015124-2	"L" Beam 22 X 40 X 822mm			1											
3	5572015126-9	"L" Beam 22 X 40 X 1047mm				1										
3	5572015031-9	Beam "L" Of 22 X 40 X 1292mm					1									
3	5572015125-0	"L" Beam 22 X 40 X 1497mm						1								
3	5572015127-7	"L" Beam 22 X 40 X 1722mm							1							
3	5572015128-5	"L" Beam 22 X 40 X 1947mm								1						
3	5572015129-3	"L" Beam 22 X 40 X 2172mm									1					

BALDAN

• Table Protection For Main Frame

Item	Code	Product description	All	3260mm	3710mm	4160mm	4650mm	5060mm	5510mm	5960mm	6410mm	6860mm	7310mm	7760mm	8170mm	8615mm
3	5572015130-7	"L" Beam 22 X 40 X 2397mm										1				
3	5572015131-5	"L" Beam 22 X 40 X 2622mm											1			
3	5572015132-3	"L" Beam 22 X 40 X 2847mm												1		
3	5572016691-6	"L" Beam 22 X 40 X 3052mm													1	
4	5572016672-0	"L" Beam 22 X 40 X 3275mm														1
4	5572015143-9	"L" Beam 22 X 40 X 482,5mm		1												
4	5572015144-7	"L" Beam 22 X 40 X 707,5mm			1											
4	5572015146-3	"L" Beam 22 X 40 X 932,50mm				1										
4	5572015030-0	"L" Beam 22 X 40 X 1177mm					1									
4	5572015145-5	"L" Beam 22 X 40 X 1382,50mm						1								
4	5572015147-1	"L" Beam 22 X 40 X 1607,50mm							1							
4	5572015148-0	"L" Beam 22 X 40 X 1832,50mm								1						
4	5572015149-8	"L" Beam 22 X 40 X 2057,50mm									1					
4	5572015136-6	"L" Beam 22 X 40 X 2282,5mm										1				
4	5572015137-4	"L" Beam 22 X 40 X 2057,5mm											1			
4	5572015138-2	"L" Beam 22 X 40 X 2732,5mm												1		
4	5572016693-2	"L" Beam 22 X 40 X 2937,5mm													1	
4	5572016671-1	"L" Beam 22 X 40 X 3160mm														1
5	5464010120-5	Central Protection	1													
6	5136012865-6	Left Support Plate	1													
7	5136012864-8	Right Support Plate	1													
8	5136012867-2	Plate "L" 20 X 30 X 2mm	4													
9	6020010122-0	Pressure Washer M6 Media		24	24	24	24	24	24	24	24	24	24	24	23	23
10	5024010073-5	Smooth Washer Ø8,5 X Ø20 X 2,00mm		4	6	7	9	11	14	15	15	17	16	18	21	23
11	6020317452-0	French Head Bolt M8 X 1,25 X 20mm Cl8.8 Rt		4	6	7	9	11	14	15	15	17	16	18	21	23
12	5024010161-8	Smooth Washer Ø7 X Ø18 X 2,00mm		24	24	24	24	24	24	24	24	24	24	24	23	23
13	6020317455-4	French Head Bolt M6 X 1,00 X 16mm Cl8.8 Rp		24	24	24	24	24	24	24	24	24	24	24	23	23
14	6020311257-5	Hexagonal Nut M6 X 1,00 Ma Cl8 Ch.10mm H.5,00mm		24	24	24	24	24	24	24	24	24	24	24	23	23
15	6020010004-5	Pressure Washer M8 Media		4	6	7	9	11	14	15	15	17	16	18	21	23
16	6020310454-8	Hexagonal Nut M8 X 1,25 Ma Cl8 Ch.13mm H.6,50mm		4	6	7	9	11	14	15	15	17	16	18	21	23
17	5136012866-4	Fixation Plate	4													

• Shaft For Functional Main Frame W/Cutout

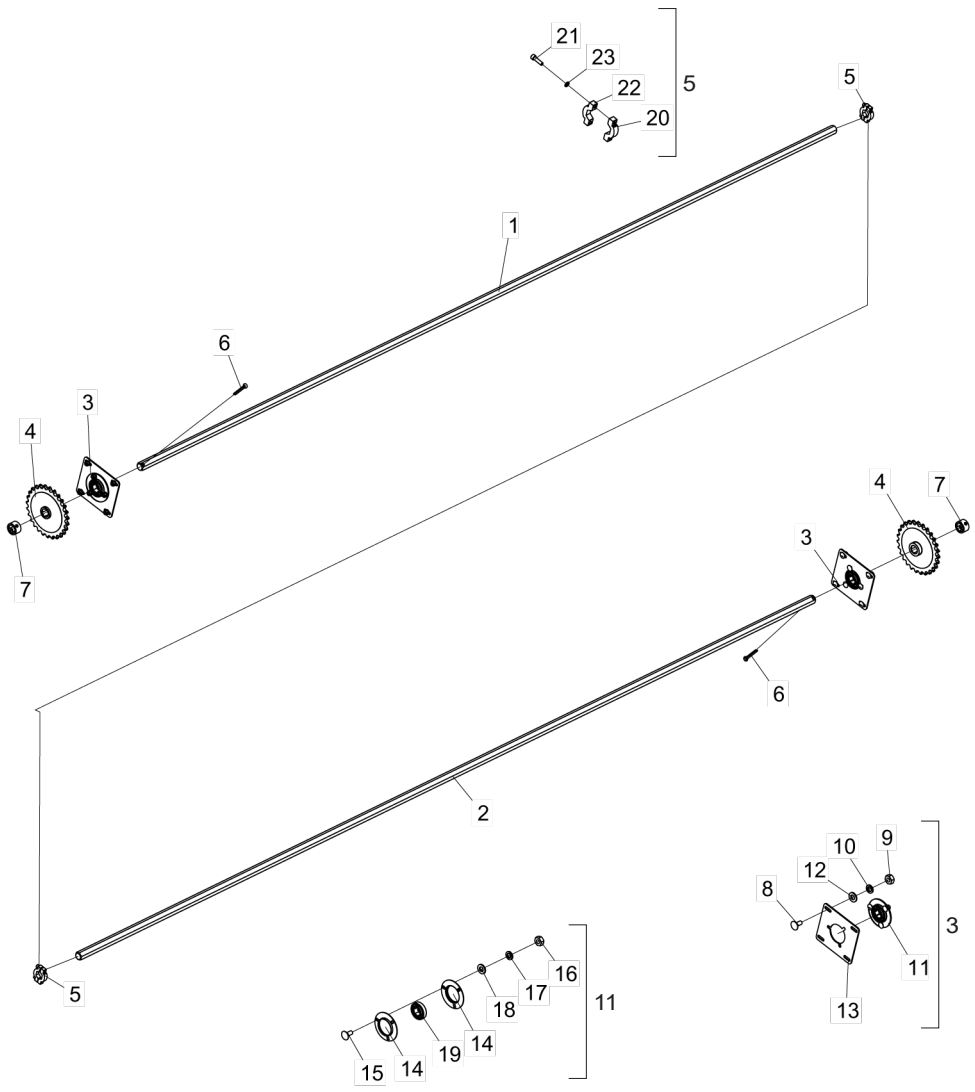

Item	Code	Product description	All	3260mm	3710mm	4160mm	4650mm	5060mm	5510mm	5960mm	6410mm	6860mm	7310mm	7760mm	8170mm	8615mm
1	5232011015-7	Hexagonal Shaft 1.1/4" X 1575mm		1												
1	5232011051-3	Hexagonal Shaft 1.1/4" X 1800mm			1											
1	5232011053-0	Hexagonal Shaft 1.1/4" X 2025mm				1										
1	5232011052-1	Hexagonal Shaft 1.1/4" X 2280mm					1									
1	5232011055-6	Hexagonal Shaft 1.1/4" X 2475mm						1								
1	5232011056-4	Hexagonal Shaft 1.1/4" X 2700mm							1							
1	5232011035-1	Hexagonal Shaft 1.1/4" X 2925mm								1						
1	5232011037-8	Hexagonal Shaft 1.1/4" X 3150mm									1					
1	5232011039-4	Hexagonal Shaft 1.1/4" X 3375mm										1				
1	5232011041-6	Hexagonal Shaft 1.1/4" X 3600mm											1			
1	5232011043-2	Hexagonal Shaft 1.1/4" X 3845mm												1		
1	5232011947-2	Hexagonal Shaft 1.1/4" X 4049,5mm													1	
1	5232011926-0	Hexagonal Shaft 1.1/4" X 4272mm														1
2	5232011014-9	Hexagonal Shaft 1.1/4" X 1830mm		1												
2	5232011050-5	Hexagonal Shaft 1.1/4" X 2055mm			1											
2	5232011052-1	Hexagonal Shaft 1.1/4" X 2280mm				1										
2	5232011001-7	Hexagonal Shaft 1.1/4" X 2533mm					1									
2	5232011054-8	Hexagonal Shaft 1.1/4" X 2730mm						1								
2	5232011057-2	Hexagonal Shaft 1.1/4" X 2955mm							1							
2	5232011034-3	Hexagonal Shaft 1.1/4" X 3180mm								1						
2	5232011036-0	Hexagonal Shaft 1.1/4" X 3395mm									1					
2	5232011038-6	Hexagonal Shaft 1.1/4" X 3630mm										1				
2	5232011040-8	Hexagonal Shaft 1.1/4" X 3855mm											1			
2	5232011042-4	Hexagonal Shaft 1.1/4" X 4080mm												1		
2	5232011946-4	Hexagonal Shaft 1.1/4" X 4284,5mm													1	
2	5232011927-8	Hexagonal Shaft 1.1/4" X 4507mm														1
3	5530012180-1	Bearing Support	2													
4	5256010221-6	Complete Gear 27 Teeth(Asa 80)	2													
5	5460010016-8	Shaft Clamp 1.1/4" Complete	2													
6	6020050124-4	Cotterpin 3/8" X 3"	2													
7	5080010795-1	Bushing With Hexagonal Hole Of Ø32,20mm	2													
8	6020317445-7	French Head Bolt M10 X 1,50 X 25mm Cl8.8 Rt	8													
9	6020310822-5	Hexagonal Nut M10 X 1,50 Ma Cl8 Ch.17mm	8													
10	6020010394-0	Pressure Washer M10 Media	8													
11	5368010578-9	Plate Bearing	2													
12	5024010466-8	Smooth Washer Ø10,3 X Ø20 X 2,00mm	8													
13	5136012952-0	Fixation Plate Of Roller	2													
14	6020250496-8	Steel Plate Bearing 03 72Msb	4													
15	6020317445-7	French Head Bolt M10 X 1,50 X 25mm Cl8.8 Rt	6													
16	6020310822-5	Hexagonal Nut M10 X 1,50 Ma Cl8 Ch.17mm	6													
17	6020010394-0	Pressure Washer M10 Media	6													
18	5024010466-8	Smooth Washer Ø10,3 X Ø20 X 2,00mm	6													
19	6020350898-3	Bearing (Ina 1st Line) Gsk104-207-Krr-B-As2/V-Ah01	2													
20	5460010014-1	Lower Clamp For Shaft 1.1/4"	2													
21	6020310111-5	Allen Bolt C/C M8 X 1,25 X 30mm Cl12.9 Rt	4													
22	5460010015-0	Upper Clamp For Shaft 1.1/4"	2													
23	6020010004-5	Pressure Washer M8 Media	4													

• Shaft For Main Frame W/Cutout for Plug

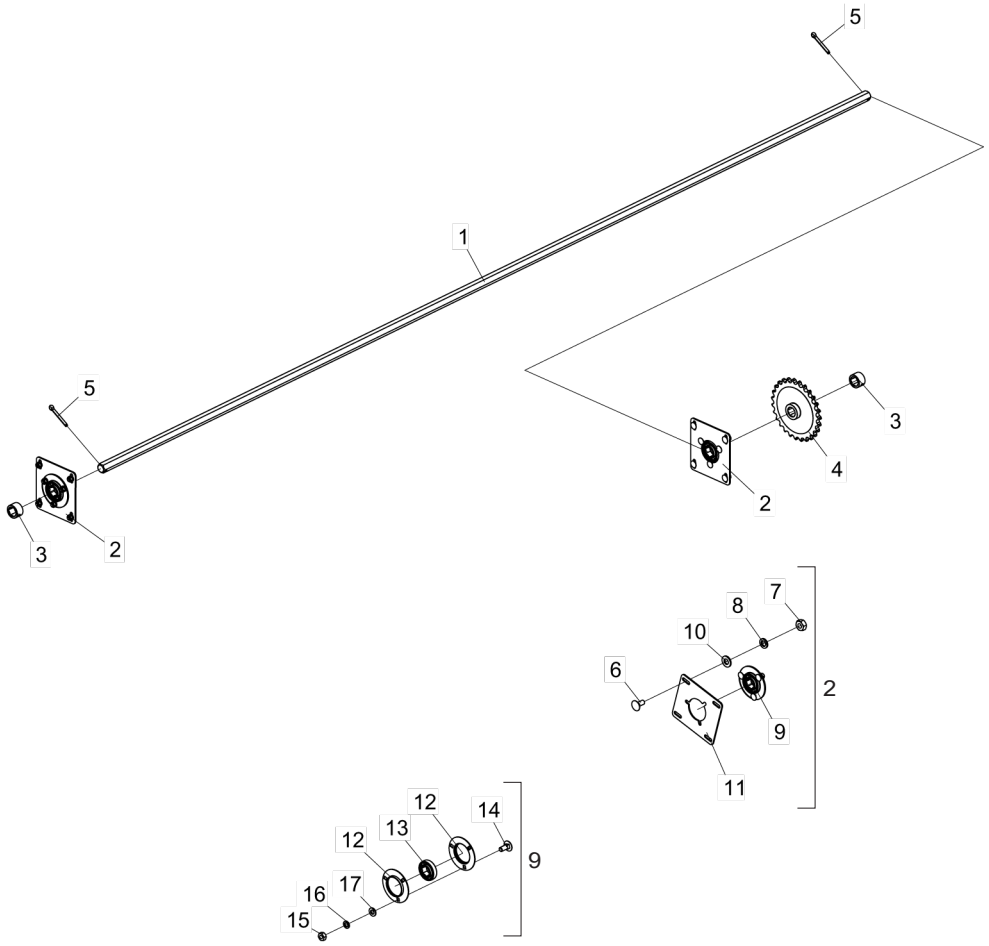

Item	Code	Product description	All	3260mm	3710mm	4160mm	4650mm
1	5232011036-0	Hexagonal Shaft 1.1/4" X 3395mm		1			
1	5232011043-2	Hexagonal Shaft 1.1/4" X 3845mm			1		
1	5232011336-9	Hexagonal Shaft 1.1/4" X 4295mm				1	
1	5232011338-5	Hexagonal Shaft 1.1/4" X 4785mm					1
2	5530012180-1	Bearing Support	2				
3	5080010795-1	Bushing With Hexagonal Hole Of Ø32,20mm	2				
4	5256010221-6	Complete Gear 27 Teeth(Asa 80)	1				
5	6020050124-4	Cotterpin 3/8" X 3"	2				
6	6020317445-7	French Head Bolt M10 X 1,50 X 25mm Cl8.8 Rt	8				
7	6020310822-5	Hexagonal Nut M10 X 1,50 Ma Cl8 Ch.17mm H.8,00mm	8				
8	6020010394-0	Pressure Washer M10 Media	8				
9	5368010578-9	Plate Bearing	2				
10	5024010466-8	Smooth Washer Ø10,3 X Ø20 X 2,00mm	8				
11	5136012952-0	Fixation Plate Of Roller	2				
12	6020250496-8	Steel Plate Bearing 03 72Msb	4				
13	6020350898-3	Bearing (Ina 1º Line) Gsk104-207-Krr-B-As2/V-Ah01	2				
14	6020317445-7	French Head Bolt M10 X 1,50 X 25mm Cl8.8 Rt	6				
15	6020310822-5	Hexagonal Nut M10 X 1,50 Ma Cl8 Ch.17mm H.8,00mm	6				
16	6020010394-0	Pressure Washer M10 Media	6				
17	5024010466-8	Smooth Washer Ø10,3 X Ø20 X 2,00mm	6				

• Shaft For Functional Main Frame For Plug

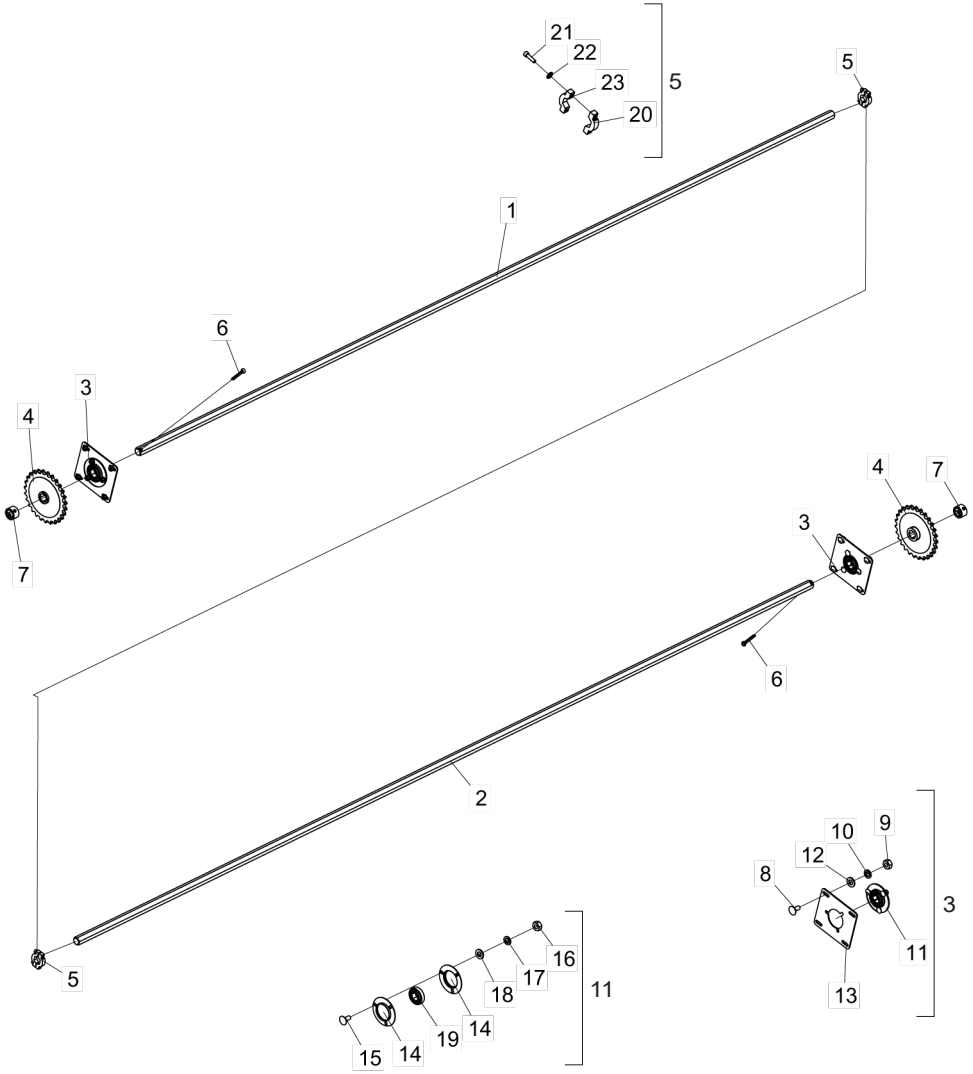

Item	Code	Product description	All	5060mm	5510mm	5960mm
1	5232011055-6	Hexagonal Shaft 1.1/4" X 2475mm		1		
1	5232011056-4	Hexagonal Shaft 1.1/4" X 2700mm			1	
1	5232011035-1	Hexagonal Shaft 1.1/4" X 2925mm				1
2	5232011054-8	Hexagonal Shaft 1.1/4" X 2730mm		1		
2	5232011057-2	Hexagonal Shaft 1.1/4" X 2955mm			1	
2	5232011034-3	Hexagonal Shaft 1.1/4" X 3180mm				1
3	5530012180-1	Bearing Support	2			
4	5256010221-6	Complete Gear 27 Teeth(Asa 80)	2			
5	5460010016-8	Shaft Clamp 1.1/4" Complete	2			
6	6020050124-4	Cotterpin 3/8" X 3"	2			
7	5080010795-1	Bushing With Hexagonal Hole Of Ø32,20mm	2			
8	6020317445-7	French Head Bolt M10 X 1,50 X 25mm Cl8.8 Rt	8			
9	6020310822-5	Hexagonal Nut M10 X 1,50 Ma Cl8 Ch.17mm H.8,00mm	8			
10	6020010394-0	Pressure Washer M10 Media	8			
11	5368010578-9	Plate Bearing	2			
12	5024010466-8	Smooth Washer Ø10,3 X Ø20 X 2,00mm	8			
13	5136012952-0	Fixation Plate Of Roller	2			
14	6020250496-8	Steel Plate Bearing 03 72Msb	4			
15	6020317445-7	French Head Bolt M10 X 1,50 X 25mm Cl8.8 Rt	6			
16	6020310822-5	Hexagonal Nut M10 X 1,50 Ma Cl8 Ch.17mm H.8,00mm	6			
17	6020010394-0	Pressure Washer M10 Media	6			
18	5024010466-8	Smooth Washer Ø10,3 X Ø20 X 2,00mm	6			
19	6020350898-3	Bearing (Ina 1º Line) Gsk104-207-Krr-B-As2/V-Ah01	2			
20	5460010014-1	Lower Clamp For Shaft 1.1/4"	2			
21	6020310111-5	Allen Bolt C/C M8 X 1,25 X 30mm Cl12.9 Rt (Phosphated)	4			
22	6020010004-5	Pressure Washer M8 Media	4			
23	5460010015-0	Upper Clamp For Shaft 1.1/4"	2			

• Complete Shaft of Plate

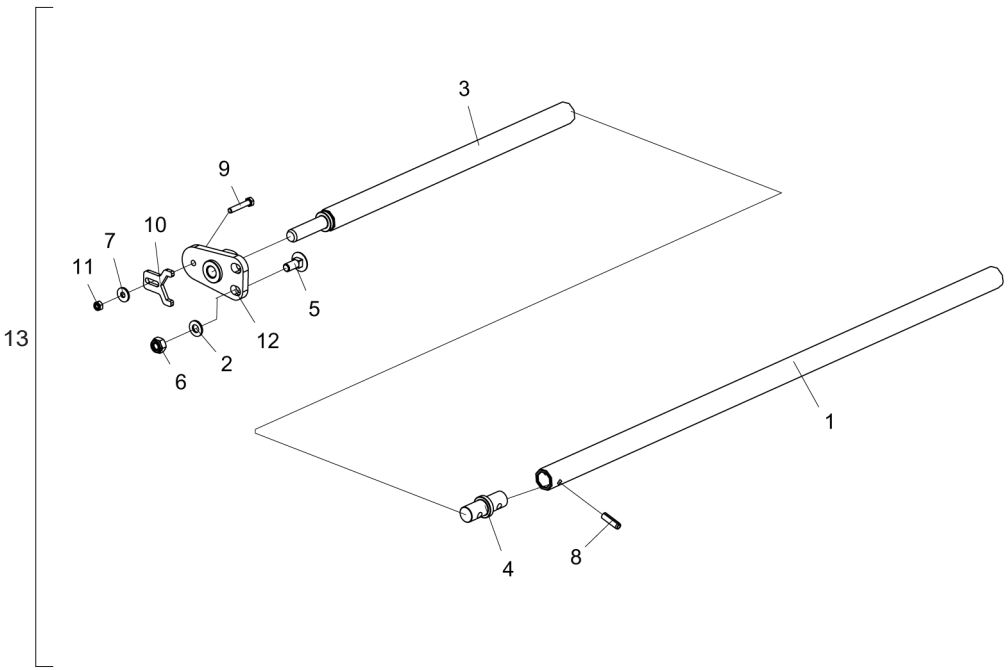

Item	Code	Product description	All	3260mm	3710mm	4160mm	4650mm	5060mm	5510mm	5960mm	6410mm	6860mm	7310mm	7760mm	8170mm	8615mm
1	5552011202-1	Tube Ø20 X Ø28 X 3150mm									1	1	1	1		
1	5552011190-4	Tube Ø20 X Ø28 X 4025mm													1	
1	5552011191-2	Tube Ø20 X Ø28 X 4500mm														1
2	5024010466-8	Smooth Washer Ø10,3 X Ø20 X 2,00mm	2													
3	5552011204-8	Tube W/Shaft 3216mm		1							1					
3	5552011205-6	Tube W/Shaft 3716mm			1							1				
3	5552011192-0	Tube W/Shaft 4091mm				1							1		1	1
3	5552011193-9	Tube W/Shaft 4566mm					1							1		
3	5552011206-4	Tube W/Shaft 5066mm						1								
3	5552011207-2	Tube W/Shaft 5516mm							1							
3	5552011208-0	Tube W/Shaft 5966mm								1						
4	5232012111-6	Blades Adjustment Shaft									1	1	1	1	1	1
5	6020317445-7	French Head Bolt M10 X 1,50 X 25mm Cl8.8 Rt	2													
6	6020317435-0	Self-Locking Nut Nylon M10 X 1,50 Ma Cl8 Ch.17mm	2													
7	5024010161-8	Smooth Washer Ø7 X Ø18 X 2,00mm	1													
8	6020310531-5	Heavy Elastic Pin Ø8 X 26mm									2	2	2	2	2	2
9	6020310898-5	Hexagonal Head Bolt M6 X 1,00 X 35mm Cl8.8 Rt	1													
10	5558010476-1	Lock Of Shaft	1													
11	6020317442-2	Self-Locking Nut Nylon Low M6 X 1,00 Ma Cl8 Ch.10mm	1													
12	5530017450-6	Guide Support	1													
13	5232012122-1	Complete Shaft(3260mm)		1												
13	5232012123-0	Complete Shaft(3710mm)			1											
13	5232012124-8	Complete Shaft(4160mm)				1										
13	5232012125-6	Complete Shaft(4650mm)					1									
13	5232012126-4	Complete Shaft(5060mm)						1								
13	5232012127-2	Complete Shaft(5510mm)							1							
13	5232012128-0	Complete Shaft(5960mm)								1						
13	5232012129-9	Complete Shaft(6410mm)									1					
13	5232012130-2	Complete Shaft(6860mm)										1				
13	5232012131-0	Complete Shaft(7310mm)											1			
13	5232012132-9	Complete Shaft(7760mm)												1		
13	5232012115-9	Complete Shaft(8170mm)													1	
13	5232012116-7	Complete Shaft(8615mm)														1

• Spiral Conductor 3260mm to 7760mm

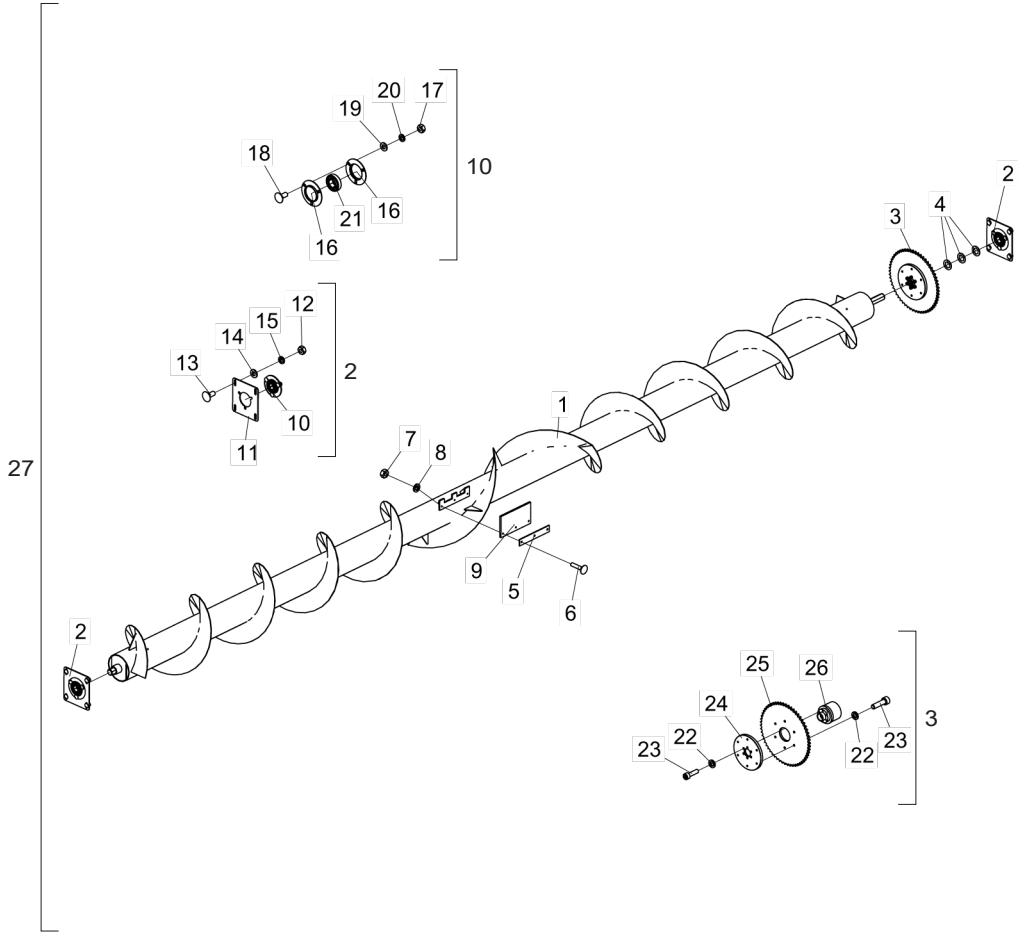

Item	Code	Product description	All	3260mm	3710mm	4160mm	4650mm	5060mm	5510mm	5960mm	6410mm	6860mm	7310mm	7760mm
1	6020050738-2	Spiral Conductor (Main Frame 3260mm)		1										
1	6020050739-0	Spiral Conductor (Main Frame 3710mm)			1									
1	6020050740-4	Spiral Conductor (Main Frame 4160mm)				1								
1	6020050737-4	Spiral Conductor (Main Frame 4650mm)					1							
1	6020050741-2	Spiral Conductor (Main Frame 5060mm)						1						
1	6020050742-0	Spiral Conductor (Main Frame 5510mm)							1					
1	6020050743-9	Spiral Conductor (Main Frame 5960mm)								1				
1	6020050744-7	Spiral Conductor (Main Frame 6410mm)									1			
1	6020050745-5	Spiral Conductor (Main Frame 6860mm)										1		
1	6020050746-3	Spiral Conductor (Main Frame 7310mm)											1	
1	6020050747-1	Spiral Conductor (Main Frame 7760mm)												1
2	5530012180-1	Bearing Support	2											
3	5256010231-3	Gear 58 Teeth(Asa 60) With Power Limiter		1	1	1	1	1	1	1	1	1		
3	5256010319-0	Gear 58 Teeth(Asa 60) With Power Limiter 900N											1	1
4	5024010490-0	Washer With Hexagonal Hole Ø32mm	3											
5	5136012868-0	Fixation Plate	2											
6	6020317456-2	French Head Bolt M6 X 1,00 X 30mm Cl8.8 Rp	6											
7	6020311257-5	Hexagonal Nut M6 X 1,00 Ma Cl8 Ch.10mm H.5,00mm	6											
8	6020010122-0	Pressure Washer M6 Media	6											
9	5352010047-0	Rubber Scraper 127 X 230 X 3/8"		2	2	2	2	2	2	2	2	2		
9	5352010059-4	Rubber Scraper 107 X 230 X 3/8"											2	2
10	5368010578-9	Plate Bearing		2										
11	5136012952-0	Fixation Plate Of Roller		2										
12	6020310822-5	Hexagonal Nut M10 X 1,50 Ma Cl8 Ch.17mm H.8,00mm		8										
13	6020317445-7	French Head Bolt M10 X 1,50 X 25mm Cl8.8 Rt		8										
14	5024010466-8	Smooth Washer Ø10,3 X Ø20 X 2,00mm		8										
15	6020010394-0	Pressure Washer M10 Media		8										
16	6020250496-8	Steel Plate Bearing 03 72Msb		4										
17	6020310822-5	Hexagonal Nut M10 X 1,50 Ma Cl8 Ch.17mm H.8,00mm		6										
18	6020317445-7	French Head Bolt M10 X 1,50 X 25mm Cl8.8 Rt		6										
19	5024010466-8	Smooth Washer Ø10,3 X Ø20 X 2,00mm		6										
20	6020010394-0	Pressure Washer M10 Media		6										
21	6020350898-3	Bearing (Ina 1º Line) Gsk104-207-Krr-B-As2/V-Ah01		2										
22	6020010004-5	Pressure Washer M8 Media		12	12	12	12	12	12	12	12	12	6	6
23	6020310111-5	Allen Bolt C/C M8 X 1,25 X 30mm Cl12.9 Rt (Phosphated)		12	12	12	12	12	12	12	12	12	6	6
24	5284010087-1	Flange Of Gear Fixation		1	1	1	1	1	1	1	1	1		
25	5256010232-1	Gear 58 Teeth(Asa 60)		1	1	1	1	1	1	1	1	1		
25	5256010320-4	Gear 58 Teeth(Asa 60)											1	1
26	6020230115-3	Power Limiter Of Row 550Nm - Br 60G203001		1	1	1	1	1	1	1	1	1		
26	6020230122-6	Torque Limiter 900N.m(Br60G304101)											1	1
27	5150010066-8	Spiral Conductor W/Torque Limiter (Main Frame 3260mm)		1										
27	5150010067-6	Spiral Conductor W/Torque Limiter(Main Frame 3710mm)			1									
27	5150010068-4	Spiral Conductor W/Torque Limiter(Main Frame 4160mm)				1								
27	5150010069-2	Spiral Conductor W/Torque Limiter(Main Frame 4650mm)					1							
27	5150010070-6	Spiral Conductor W/Torque Limiter(Main Frame 5060mm)						1						
27	5150010071-4	Spiral Conductor W/Torque Limiter(Main Frame 5510mm)							1					
27	5150010072-2	Spiral Conductor W/Torque Limiter(Main Frame 5960mm)								1				
27	5150010073-0	Spiral Conductor W/Torque Limiter(Main Frame 6410mm)									1			
27	5150010074-9	Spiral Conductor W/Torque Limiter(Main Frame 6860mm)										1		
27	5150010075-7	Spiral Conductor W/Torque Limiter(Main Frame 7310mm)											1	
27	5150010076-5	Spiral Conductor W/Torque Limiter(Main Frame 7760mm)												1

• Spiral Conductor 8170mm and 8615mm

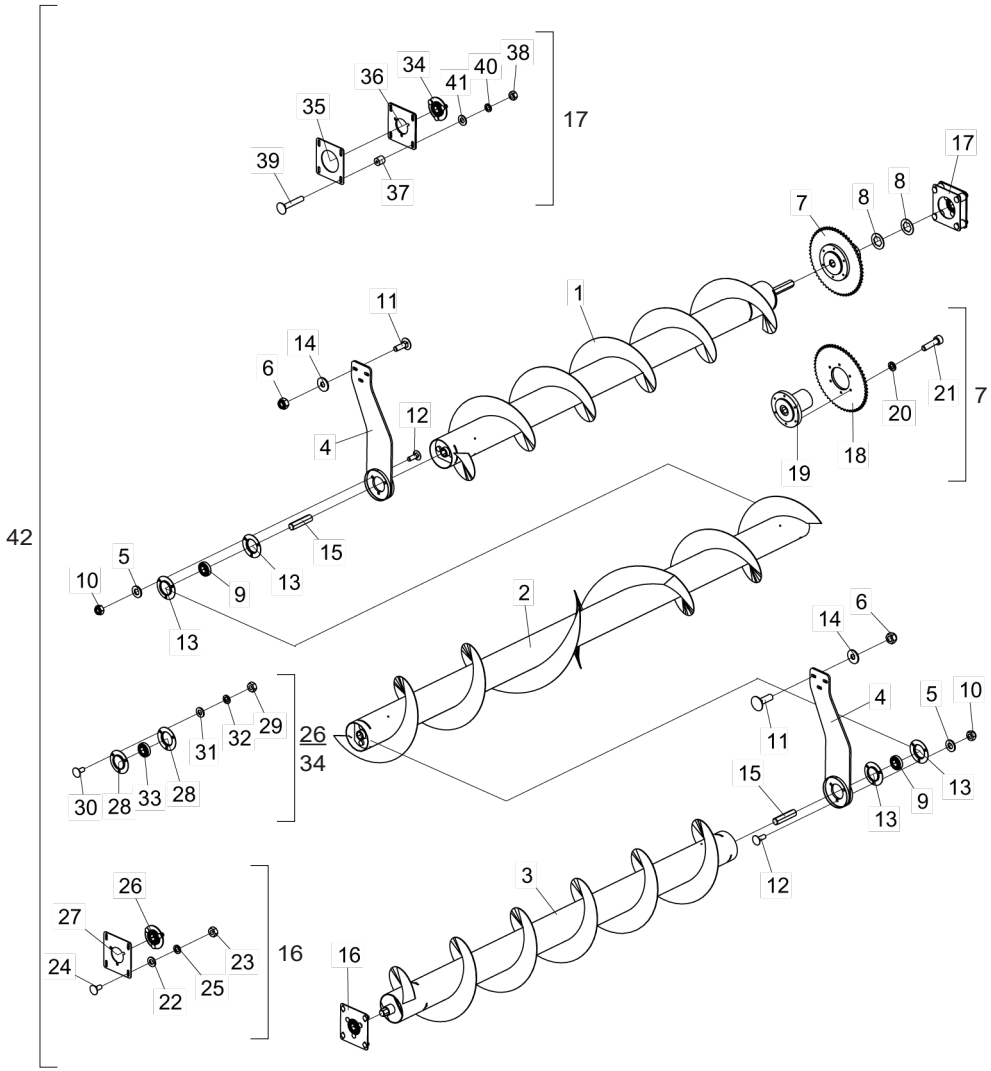

Item	Code	Product description	All	8170mm	8615mm
1	6020058117-5	Left Spiral Conductor (Main Frame 8170mm)		1	
1	6020058094-2	Left Spiral Conductor (Main Frame 8615mm)			1
2	6020058092-6	Central Spiral Conductor	1		
3	6020058116-7	Right Spiral Conductor (Main Frame 8170mm)		1	
3	6020058093-4	Right Spiral Conductor (Main Frame 8615mm)			1
4	5530016083-1	Bearing Fixation Support	2		
5	5024010466-8	Smooth Washer Ø10,3 X Ø20 X 2,00mm	6		
6	6020310847-0	Self-Locking Nut With Nylon M12 X 1 ,75 Ma Cl8 Ch.19mm H.12,00mm	6		
7	5256010471-5	Gear 58 Teeth(Asa 60) With Power Limiter 900N	1		
8	5024010490-0	Washer With Hexagonal Hole Ø32mm	2		
9	6020350898-3	Bearing (Ina 1º Line) Gsk104-207-Krr-B-As2/V-Ah01	2		
10	6020317435-0	Self-Locking Nut With Nylon M10 X 1,50 Ma Cl8 Ch.17mm H.10,00mm	6		
11	6020317537-2	French Head Bolt M12 X 1,75 X 40mm Cl8.8 Rp	6		
12	6020317544-5	French Head Bolt M10 X 1,50 X 30mm Cl8.8 Rt	6		
13	6020250496-8	Steel Plate Bearing 03 72Msb	4		
14	5024010068-9	Smooth Washer Ø13,3 X Ø35,5 X 3,00mm	6		
15	5232011925-1	Hexagonal Shaft 1.1/4" X 136mm	2		
16	5530012180-1	Bearing Support	2		
17	5530016524-8	Bearing Support	1		
18	5256010320-4	Gear 58 Teeth(Asa 60)	1		
19	6020230133-1	Torque Limiter 1500N.M(Br60G505401)	1		
20	6020010004-5	Pressure Washer M8 Media	6		
21	6020310111-5	Allen Bolt C/C M8 X 1,25 X 30mm Cl12.9 Rt (Phosphated)	6		
22	5024010466-8	Smooth Washer Ø10,3 X Ø20 X 2,00mm	8		
23	6020310822-5	Hexagonal Nut M10 X 1,50 Ma Cl8 Ch.17mm H.8,00mm	8		
24	6020317445-7	French Head Bolt M10 X 1,50 X 25mm Cl8.8 Rt	8		
25	6020010394-0	Pressure Washer M10 Media	8		
26	5368010578-9	Plate Bearing	2		
27	5136012952-0	Fixation Plate Of Roller	2		
28	6020250496-8	Steel Plate Bearing 03 72Msb	6		
29	6020310822-5	Hexagonal Nut M10 X 1,50 Ma Cl8 Ch.17mm H.8,00mm	9		
30	6020317445-7	French Head Bolt M10 X 1,50 X 25mm Cl8.8 Rt	9		
31	5024010466-8	Smooth Washer Ø10,3 X Ø20 X 2,00mm	9		
32	6020010394-0	Pressure Washer M10 Media	9		
33	6020350898-3	Bearing (Ina 1º Line) Gsk104-207-Krr-B-As2/V-Ah01	3		
34	5368010578-9	Plate Bearing	1		
35	5136016782-1	Fixation plate of Bearing	1		
36	5136016778-3	Fixation plate of Bearing	1		
37	5080011735-3	Bushing Ø12,5 X Ø1.1/2" X 38,5mm	4		
38	6020310820-9	Hexagonal Nut M12 X 1,75 Ma Cl8 Ch.19mm H.10,00mm	4		
39	6020317448-1	French Head Bolt M12 X 1,75 X 75mm Cl8.8 Rp	4		
40	6020010395-8	Pressure Washer M12 Media	4		
41	5024010162-6	Smooth Washer Ø13 X Ø26 X 2,00mm	4		
42	5150010140-0	Spiral Conductor W/Power Limiter Of Complete (Main Frame 8170mm)		1	
42	5150010138-9	Spiral Conductor W/Power Limiter Of Complete (Main Frame 8615mm)			1

• Spiral Conductor Without Flip 4160mm to 7760mm

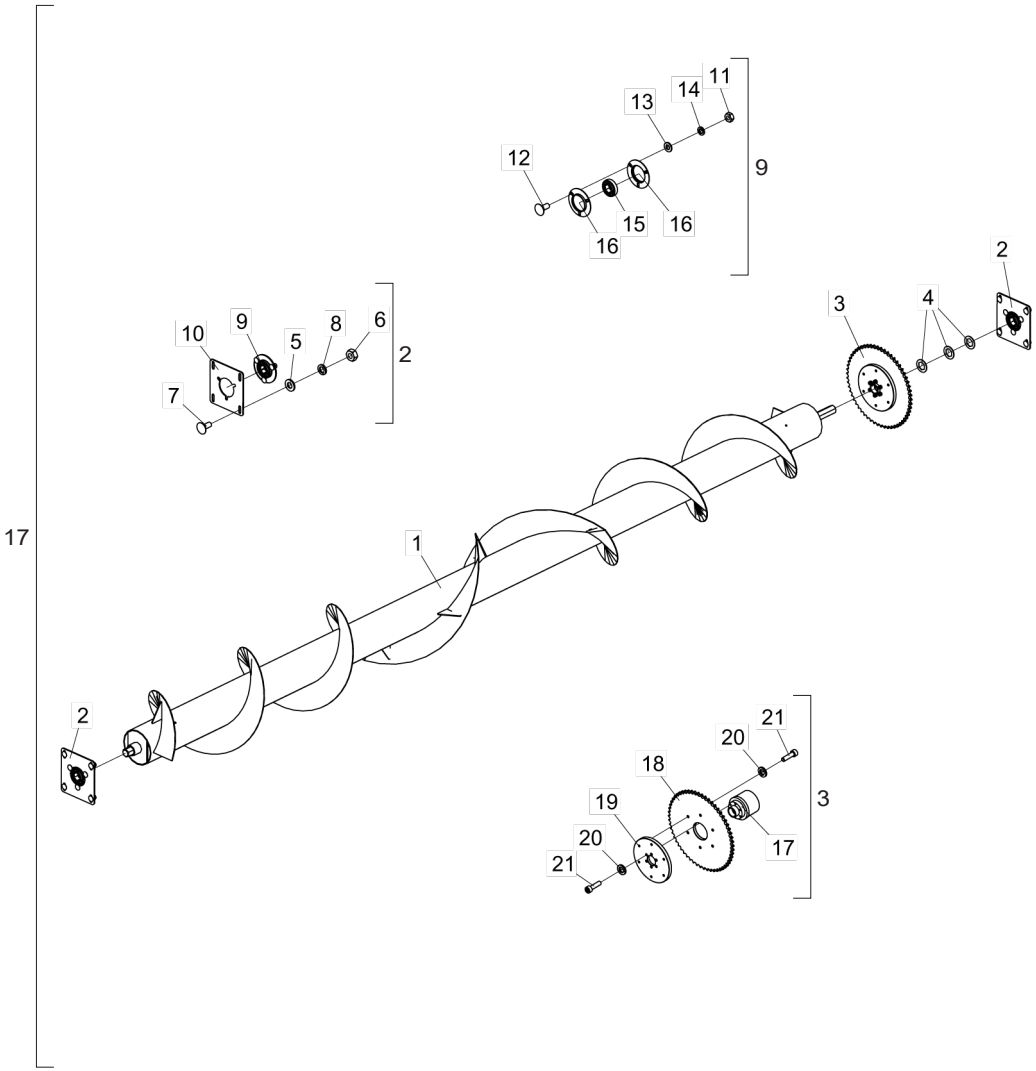

Item	Code	Product description	All	4160mm	4650mm	5060mm	5510mm	5960mm	6410mm	6860mm	7310mm	7760mm
1	6020055477-1	Spiral Conductor Without Plate (Main Frame 4160mm)		1								
1	6020055478-0	Spiral Conductor Without Plate (Main Frame 4650mm)			1							
1	6020055479-8	Spiral Conductor Without Plate (Main Frame 5060mm)				1						
1	6020055480-1	Spiral Conductor Without Plate (Main Frame 5510mm)					1					
1	6020055481-0	Spiral Conductor Without Plate (Main Frame 5960mm)						1				
1	6020055482-8	Spiral Conductor Without Plate (Main Frame 6410mm)							1			
1	6020055483-6	Spiral Conductor Without Plate (Main Frame 6860mm)								1		
1	6020055484-4	Spiral Conductor Without Plate (Main Frame 7310mm)									1	
1	6020055485-2	Spiral Conductor Without Plate (Main Frame 7760mm)										1
2	5530012180-1	Bearing Support	2									
3	5256010231-3	Gear 58 Teeth(Asa 60) With Power Limiter		1	1	1	1	1	1	1		
3	5256010319-0	Gear 58 Teeth(Asa 60) With Power Limiter 900N									1	1
4	5024010490-0	Washer With Hexagonal Hole Ø32mm	3									
5	5024010466-8	Smooth Washer Ø10,3 X Ø20 X 2,00mm	4									
6	6020310822-5	Hexagonal Nut M10 X 1,50 Ma Cl8 Ch.17mm H.8,00mm	4									
7	6020317445-7	French Head Bolt M10 X 1,50 X 25mm Cl8.8 Rt	4									
8	6020010394-0	Pressure Washer M10 Media	4									
9	5368010578-9	Plate Bearing	1									
10	5136012952-0	Fixation Plate Of Roller	1									
11	6020310822-5	Hexagonal Nut M10 X 1,50 Ma Cl8 Ch.17mm H.8,00mm	3									
12	6020317445-7	French Head Bolt M10 X 1,50 X 25mm Cl8.8 Rt	3									
13	5024010466-8	Smooth Washer Ø10,3 X Ø20 X 2,00mm	3									
14	6020010394-0	Pressure Washer M10 Media	3									
15	6020350898-3	Bearing (Ina 1º Line) Gsk104-207-Krr-B-As2/V-Ah01	1									
16	6020250496-8	Steel Plate Bearing 03 72Msb	2									
17	5150010115-0	Spiral Conductor W/Torque Limiter Without Flip(4160mm)		1								
17	5150010116-8	Spiral Conductor W/Torque Limiter Without Flip(4650mm)			1							
17	5150010117-6	Spiral Conductor W/Torque Limiter Without Flip(5060mm)				1						
17	5150010118-4	Spiral Conductor W/Torque Limiter Without Flip(5510mm)					1					
17	5150010119-2	Spiral Conductor W/Torque Limiter Without Flip(5960mm)						1				
17	5150010120-6	Spiral Conductor W/Torque Limiter Without Flip(6410mm)							1			
17	5150010121-4	Spiral Conductor W/Torque Limiter Without Flip(6860mm)								1		
17	5150010122-2	Spiral Conductor W/Torque Limiter Without Flip(7310mm)									1	
17	5150010123-0	Spiral Conductor W/Torque Limiter Without Flip(7760mm)										1

• Coupling Support CASE 2366-2388-2399

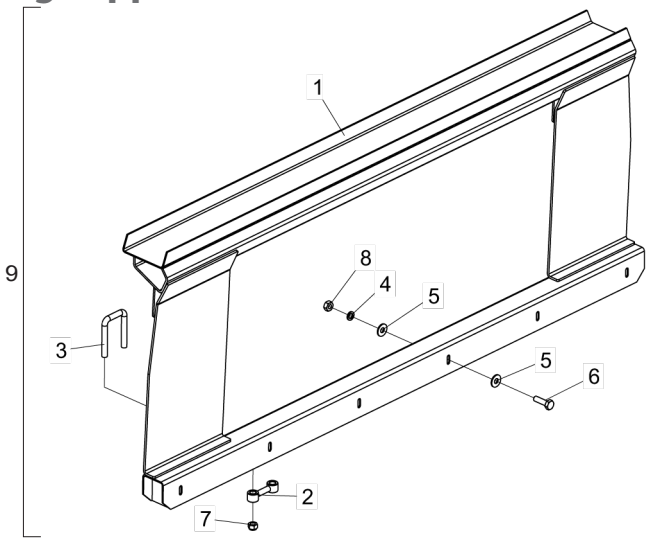

Item	Code	Product description	All
1	5530015385-1	Support Coupling (Modcase 2366/2388/2399/2799)	1
2	5080010805-2	Back Bushing (Case)	2
3	5068010118-0	Clamp Of 125 X 82 X M16	2
4	6020010394-0	Pressure Washer M10 Media	6
5	5024010075-1	Smooth Washer Ø10,3 X Ø25 X 2,00mm	12
6	6020310437-8	Hexagonal Head Bolt M10 X 1,50 X 35mm Cl8.8 Rt	6
7	6020317443-0	Self-Locking Nut With Nylon M16 X 2,00 Ma Cl8 Ch.24mm H.16,00mm	4
8	6020310822-5	Hexagonal Nut M10 X 1,50 Ma Cl8 Ch.17mm H.8,00mm	6
9	5530015383-5	Support Coupling (Modcase 2366/2388/2399)	1

• Coupling Support CLAAS

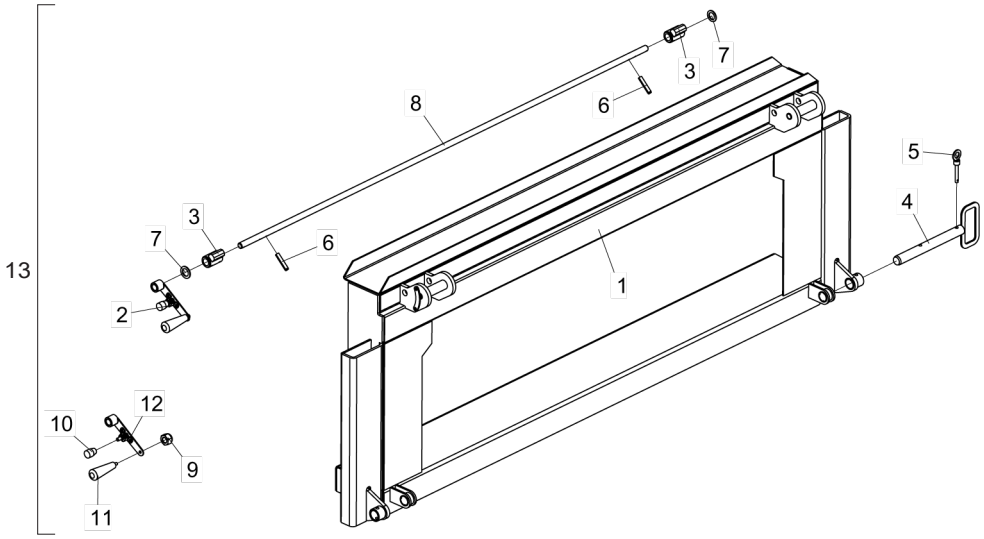

Item	Code	Product description	All
1	5003010004-0	CLAAS Coupling	1
2	5008010247-7	Handle	1
3	5080011611-0	Bushing	2
4	5432010622-5	Lateral Pin	2
5	5432010621-7	Pin Ø3/8"	2
6	6020310471-8	Heavy Elastic Pin Ø6 X 30mm	6
7	5024010018-2	Smooth Washer Ø20 X Ø31 X 2,00mm	2
8	5232011919-7	Shaft 3/4" X 1880mm	1
9	6020310813-6	Self-Locking Nut With Nylon 5/16" 18F Unc Gr5 Ch.1/2" H.9,00mm	1
10	6020430203-3	Handle Pma 330 Thread 3/8" X 16 Fios	1
11	5468010304-9	Handle 1.1/2" X 117mm	1
12	5530016098-0	Handle Support	1
13	5530016126-9	Coupling Suport (CLAAS)	1

• Coupling Support JD-SLC-STS

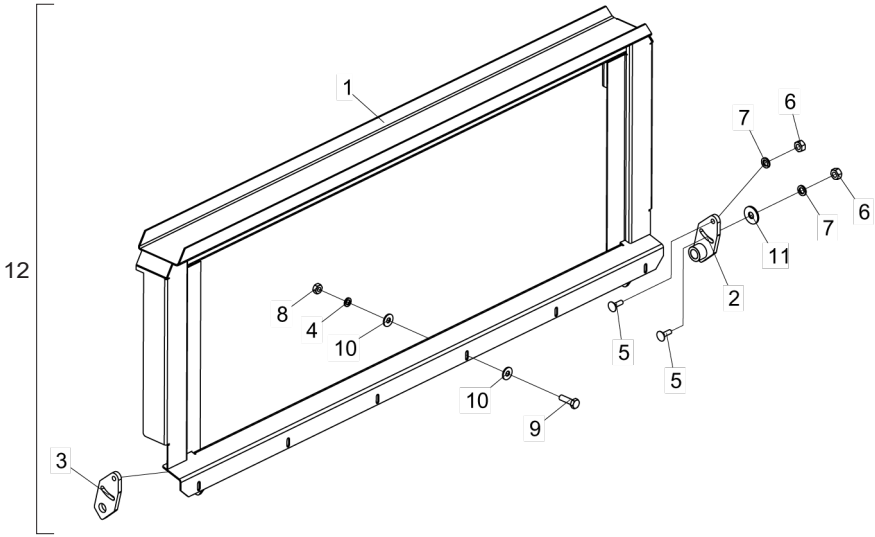

Item	Code	Product description	All
1	5530012115-1	Support Coupling (Modjd/Slw/Sts)	1
2	5136013303-0	Fixation Plate of Coupling	1
3	5136012876-1	Plate Of Fixation	1
4	6020010394-0	Pressure Washer M10 Media	6
5	6020317537-2	French Head Bolt M12 X 1,75 X 40mm Cl8.8 Rp	4
6	6020310820-9	Hexagonal Nut M12 X 1,75 Ma Cl8 Ch.19mm H.10,00mm	4
7	6020010395-8	Pressure Washer M12 Media	4
8	6020310822-5	Hexagonal Nut M10 X 1,50 Ma Cl8 Ch.17mm H.8,00mm	6
9	6020310437-8	Hexagonal Head Bolt M10 X 1,50 X 35mm Cl8.8 Rt	6
10	5024010075-1	Smooth Washer Ø10,3 X Ø25 X 2,00mm	12
11	5024010068-9	Smooth Washer Ø13,3 X Ø35,5 X 3,00mm	2
12	5530014238-8	Support Complete Coupling (Modjd/Slw/Sts)	1

• Coupling Support MF3640-5650-6845-6850-6855 and IDEAL9070-9075-9090-1170-1175

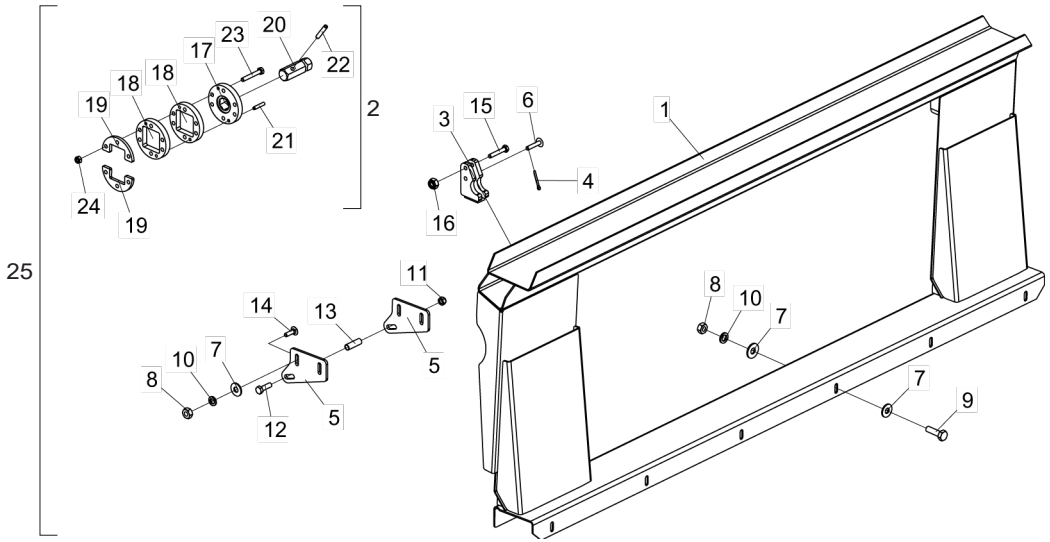

Item	Code	Product description	All
1	5530014338-4	Coupling Suport (Mod.Mf3640/5650/6845/6850/6855/Ideal9070/9075/9090/1170/1175)	1
2	5005010018-6	Adaptor Of Cardan For Ideal Harvester	1
3	5530014336-8	Hitch Support Of Coupling (Ideal)	2
4	6020050101-5	Cotterpin 1/8" X 1"	2
5	5136013440-0	Fixation Plate Of Coupling	4
6	6020311244-3	French Head Pin Ø9,8 X 33mm	2
7	5024010075-1	Smooth Washer Ø10,3 X Ø25 X 2,00mm	20
8	6020310822-5	Hexagonal Nut M10 X 1,50 Ma Cl8 Ch.17mm H.8,00mm	14
9	6020310437-8	Hexagonal Head Bolt M10 X 1,50 X 35mm Cl8.8 Rt	6
10	6020010394-0	Pressure Washer M10 Media	14
11	6020310847-0	Self-Locking Nut With Nylon M12 X 1 ,75 Ma Cl8 Ch.19mm H.12,00mm	2
12	6020317552-6	Hexagonal Head Bolt M12 X 1,75 X 80mm Cl8.8 Rt	2
13	5080010970-9	Bushing Of Ø13 X Ø16 X 51mm	2
14	6020317461-9	French Head Bolt M10 X 1,50 X 35mm Cl8.8 Rt	8
15	6020310151-4	Hexagonal Head Bolt M10 X 1,50 X 60mm Cl8,8 Rt	2
16	6020317435-0	Self-Locking Nut With Nylon M10 X 1,50 Ma Cl8 Ch.17mm H.10,00mm	2
17	5284010104-5	Flange With Hexagonal Bushing 32,2mm	1
18	5284010105-3	Flange Of Ø120 X Q.63,8 X 5/8"	2
19	5284010106-1	Fixation Flange Of Adptor (Ideal)	2
20	5232011187-0	Hexagonal Shaft 1.1/4" X 100mm	1
21	6020310508-0	Heavy Elastic Pin Ø8 X 40mm	2
22	6020310510-2	Heavy Elastic Pin Ø10 X 55mm	1
23	6020317444-9	Hexagonal Head Bolt M10 X 1,50 X 70mm Cl8.8 Rt	6
24	6020317435-0	Self-Locking Nut With Nylon M10 X 1,50 Ma Cl8 Ch.17mm H.10,00mm	6
25	5530014339-2	Support Complete Coupling	1

• Coupling Support MF 9690-9790-VALTRA BC 6500-7500

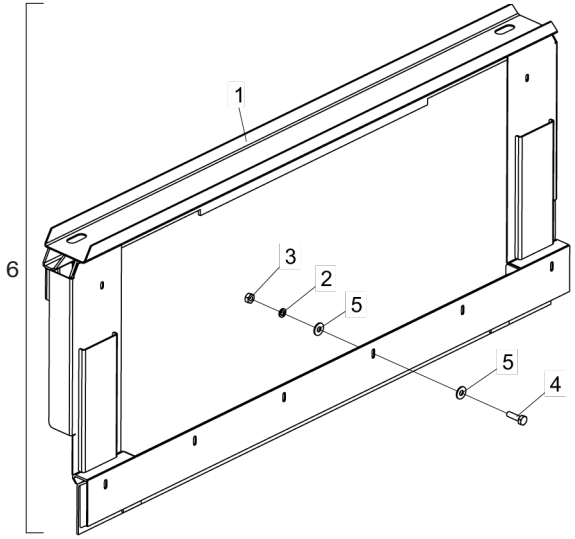

Item	Code	Product description	All
1	5530012244-1	Support Coupling (Modmf / Valtra Bc 4500/6500/7500)	1
2	6020010394-0	Pressure Washer M10 Media	6
3	6020310822-5	Hexagonal Nut M10 X 1,50 Ma Cl8 Ch.17mm H.8,00mm	6
4	6020310437-8	Hexagonal Head Bolt M10 X 1,50 X 35mm Cl8.8 Rt	6
5	5024010075-1	Smooth Washer Ø10,3 X Ø25 X 2,00mm	12
6	5530012245-0	Support Coupling (Modmassey Fergusson 9690/9790-Valtra Bc 6500/7500)	1

• Coupling Support MF3640-5650-ADVANCE MF32-34-38 VALTRA BC 4500

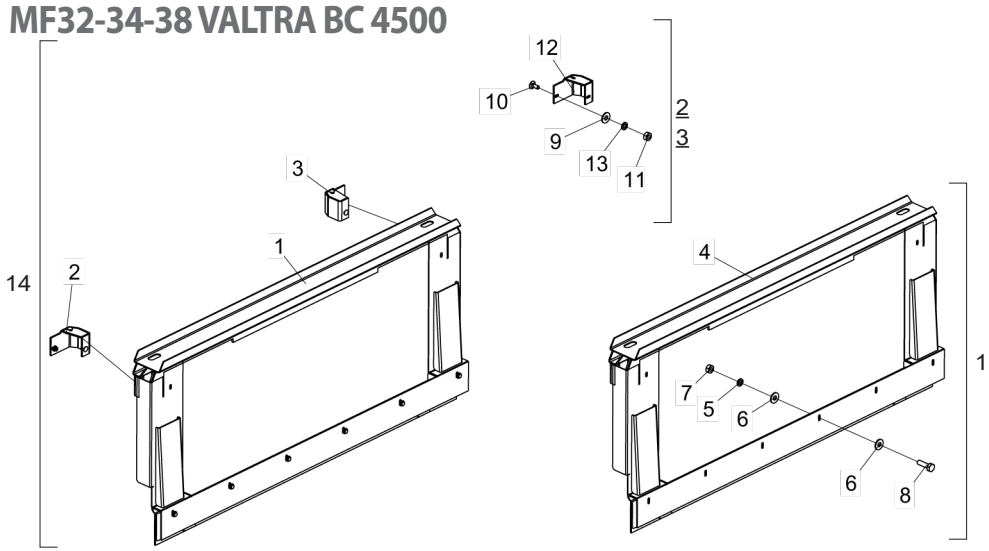

Item	Code	Product description	All
1	5530012245-0	Support Coupling (Modmassey Fergusson 9690/9790-Valtra Bc 6500/7500)	1
2	5530012249-2	Complete Right Fixation Support	1
3	5530012248-4	Complete Fixation Left Support	1
4	5530012244-1	Support Coupling (Modmf / Valtra Bc 4500/6500/7500)	1
5	6020010394-0	Pressure Washer M10 Media	6
6	5024010075-1	Smooth Washer Ø10,3 X Ø25 X 2,00mm	12
7	6020310822-5	Hexagonal Nut M10 X 1,50 Ma Cl8 Ch.17mm H.8,00mm	6
8	6020310437-8	Hexagonal Head Bolt M10 X 1,50 X 35mm Cl8.8 Rt	6
9	5024010075-1	Smooth Washer Ø10,3 X Ø25 X 2,00mm	6
10	6020317445-7	French Head Bolt M10 X 1,50 X 25mm Cl8.8 Rt	6
11	6020310822-5	Hexagonal Nut M10 X 1,50 Ma Cl8 Ch.17mm H.8,00mm	6
12	5530012246-8	Right Fixation Support	1
12	5530012247-6	Fixation Left Support	1
13	6020010394-0	Pressure Washer M10 Media	6
14	5530012250-6	Support Coupling (Modvaltra Bc 4500-Mf3640/5650-Advance-Mf32/34/38)	1

• Coupling Support NH TC 57-55

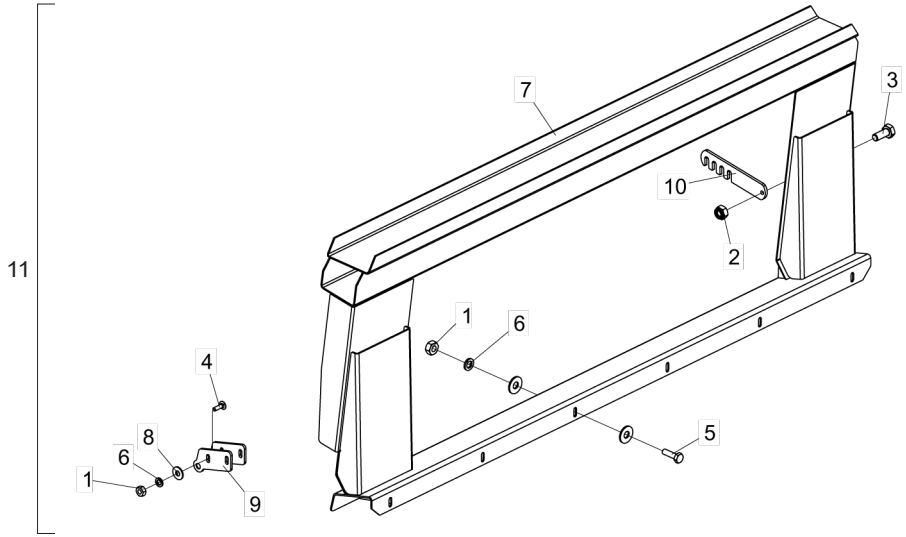

Item	Code	Product description	All
1	6020310822-5	Hexagonal Nut M10 X 1,50 Ma Cl8 Ch.17mm H.8,00mm	14
2	6020317435-0	Self-Locking Nut With Nylon M10 X 1,50 Ma Cl8 Ch.17mm H.10,00mm	1
3	6020310452-1	Hexagonal Head Bolt M10 X 1,50 X 25mm Cl8.8 Rt	1
4	6020317461-9	French Head Bolt M10 X 1,50 X 35mm Cl8.8 Rt	8
5	6020310437-8	Hexagonal Head Bolt M10 X 1,50 X 35mm Cl8.8 Rt	6
6	6020010394-0	Pressure Washer M10 Media	14
7	5530012265-4	Support Complete Coupling (Modnh Tc 57-55)	1
8	5024010075-1	Smooth Washer Ø10,3 X Ø25 X 2,00mm	20
9	5530012269-7	Fixation Support Of Coupling	2
10	5558010321-8	Hitch Lock	1
11	5530012266-2	Support Complete Coupling (Modnh Tc 57-55)	1

• Coupling Support NH 4040-5050

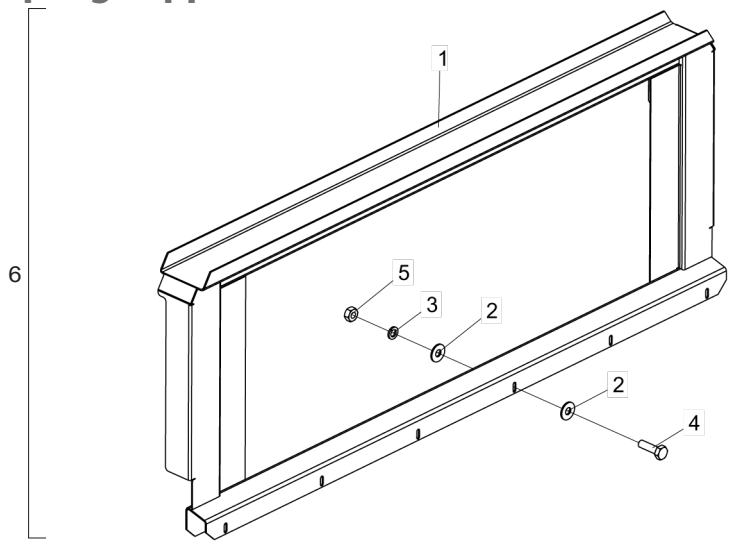

Item	Code	Product description	All
1	5530014535-2	Support Coupling (Modnh 4040/5050)	1
2	5024010075-1	Smooth Washer Ø10,3 X Ø25 X 2,00mm	12
3	6020010394-0	Pressure Washer M10 Media	6
4	6020310437-8	Hexagonal Head Bolt M10 X 1,50 X 35mm Cl8.8 Rt	6
5	6020310822-5	Hexagonal Nut M10 X 1,50 Ma Cl8 Ch.17mm H.8,00mm	6
6	5530014534-4	Support Complete Coupling (Modnh 4040/5050)	1

• Coupling Support NH 8040-8055

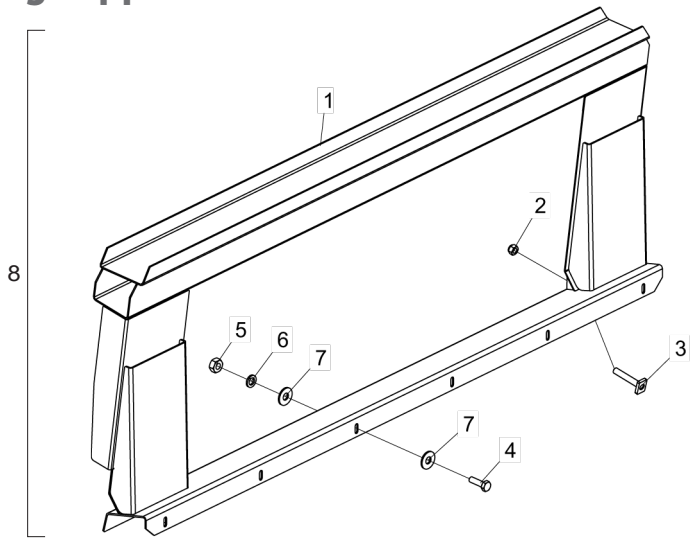

Item	Code	Product description	All
1	5530014240-0	Coupling Suport(Mod.Nh 8040/8055)	1
2	6020317443-0	Self-Locking Nut With Nylon M16 X 2,00 Ma Cl8 Ch.24mm H.16,00mm	2
3	5550010146-5	Rod W/Plate	2
4	6020310437-8	Hexagonal Head Bolt M10 X 1,50 X 35mm Cl8.8 Rt	6
5	6020310822-5	Hexagonal Nut M10 X 1,50 Ma Cl8 Ch.17mm H.8,00mm	6
6	6020010394-0	Pressure Washer M10 Media	6
7	5024010075-1	Smooth Washer Ø10,3 X Ø25 X 2,00mm	12
8	5530014239-6	Support Complete Coupling (Modnh 8040/8055)	1

• Coupling Support NH TC 59

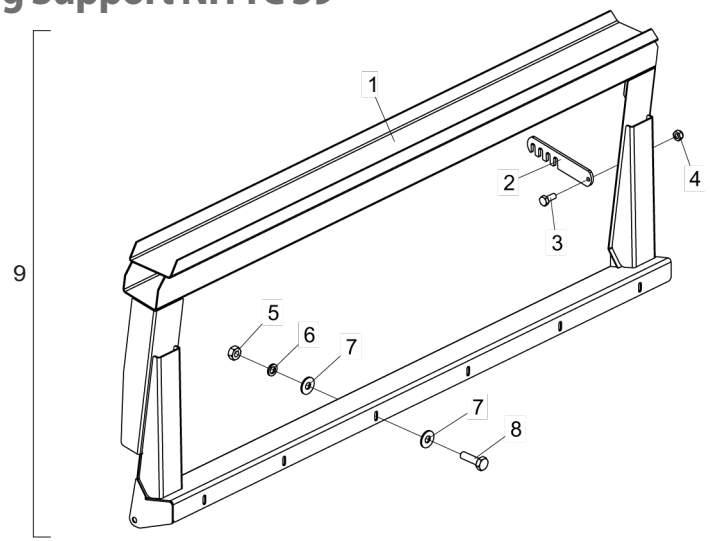

Item	Code	Product description	All
1	5530012302-2	Support Coupling (Modnew Holland Tc 59)	1
2	5558010321-8	Hitch Lock	1
3	6020310452-1	Hexagonal Head Bolt M10 X 1,50 X 25mm Cl8.8 Rt	1
4	6020317435-0	Self-Locking Nut With Nylon M10 X 1,50 Ma Cl8 Ch.17mm H.10,00mm	1
5	6020310822-5	Hexagonal Nut M10 X 1,50 Ma Cl8 Ch.17mm H.8,00mm	6
6	6020010394-0	Pressure Washer M10 Media	6
7	5024010075-1	Smooth Washer Ø10,3 X Ø25 X 2,00mm	12
8	6020310437-8	Hexagonal Head Bolt M10 X 1,50 X 35mm Cl8.8 Rt	6
9	5530012301-4	Support Complete Coupling (Modnew Holland Tc 59)	1

• Coupling Support NH TC 5070-5090-CS 660 CR 5080-6080-9060 and CASE2566-2688-8010-8120

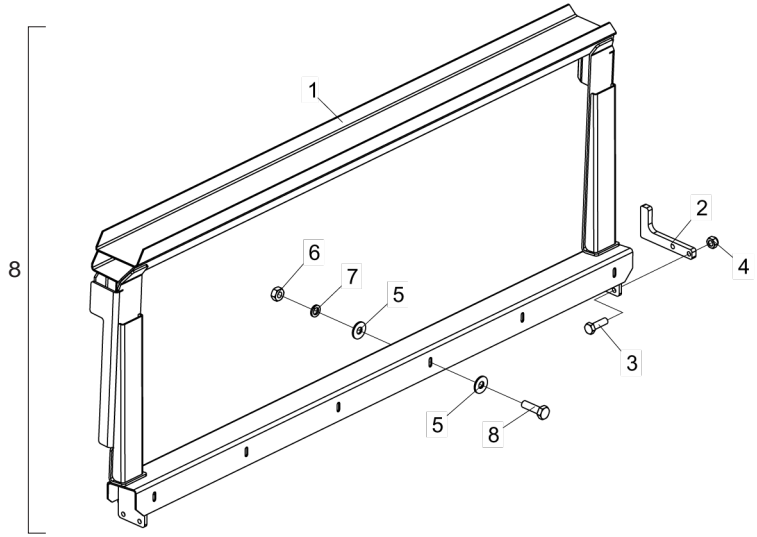

Item	Code	Product description	All
1	5530014971-4	Support Complete Coupling (Mod Nh Tc 5070/5090 - Cs 660 - Cr 9060) Case	1
2	5136014369-8	Fixation Plate	2
3	6020310152-2	Hexagonal Head Bolt M12 X 1,75 X 40mm Cl8.8 Rp	4
4	6020310847-0	Self-Locking Nut With Nylon M12 X 1 ,75 Ma Cl8 Ch.19mm H.12,00mm	4
5	5024010075-1	Smooth Washer Ø10,3 X Ø25 X 2,00mm	12
6	6020310822-5	Hexagonal Nut M10 X 1,50 Ma Cl8 Ch.17mm H.8,00mm	6
7	6020010394-0	Pressure Washer M10 Media	6
8	6020310437-8	Hexagonal Head Bolt M10 X 1,50 X 35mm Cl8.8 Rt	6
9	5530014970-6	Support Complete Coupling (Mod Nh Tc 5070/5090-Cs 660-Cr	1

• Large Lateral Protection

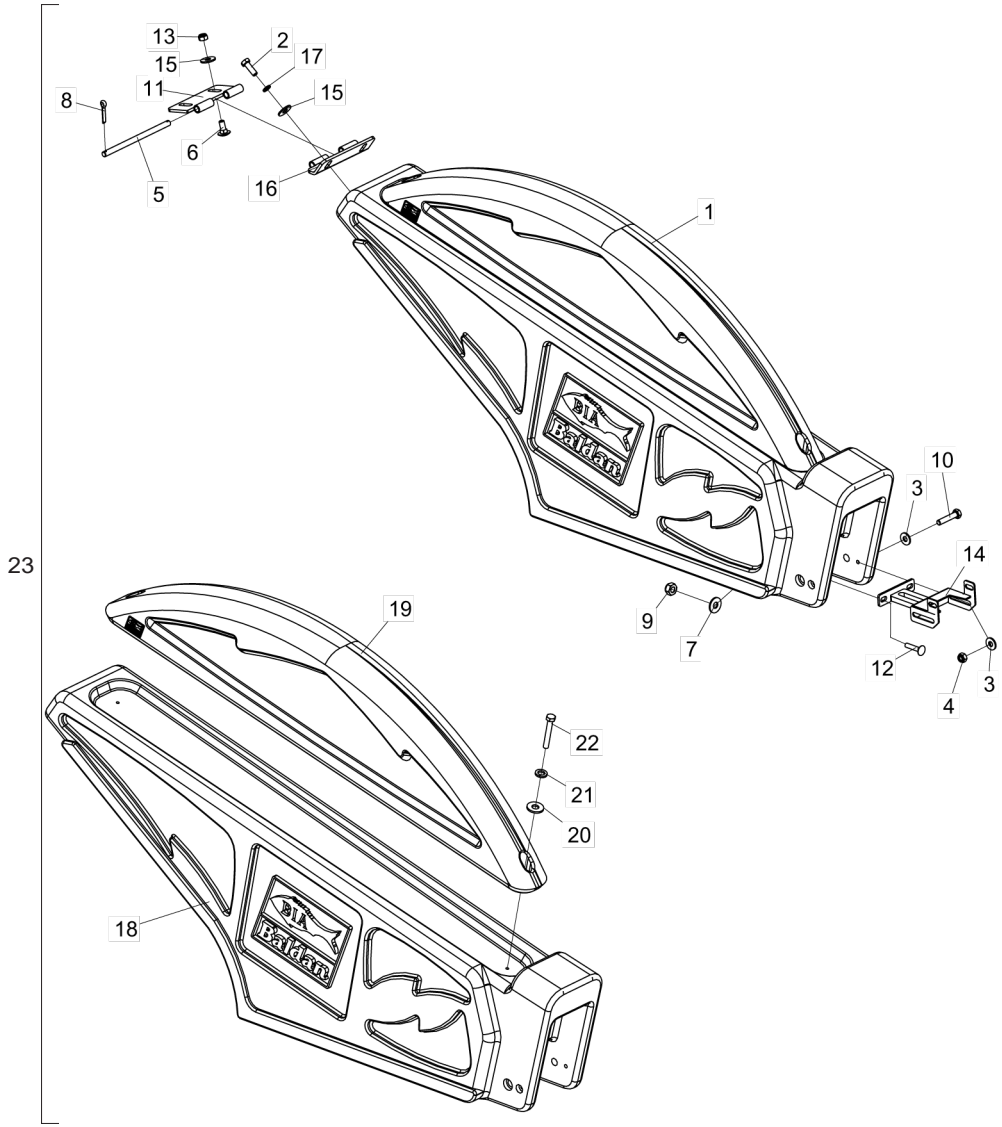

Item	Code	Product description	All	Right	Left
1	6020310694-0	Large Lateral Right Protection		1	
1	6020310695-8	Large Lateral Left Protection			1
2	6020310439-4	Hexagonal Head Bolt M12 X 1,75 X 35mm Cl8.8 Rt	2		
3	5024010073-5	Smooth Washer Ø8,5 X Ø20 X 2,00mm	4		
4	6020317449-0	Self-Locking Nut With Nylon Low M8 X 1,25 Ma Cl8 Ch.13mm H.8,00mm	2		
5	5232011560-4	Shaft Ø1/2" X 224mm	1		
6	6020311202-8	French Head Bolt M12 X 1,75 X 30mm Cl8.8 Rt	2		
7	5024010075-1	Smooth Washer Ø10,3 X Ø25 X 2,00mm	2		
8	6020050104-0	Cotterpin 3/16" X 1"	2		
9	6020317435-0	Self-Locking Nut With Nylon M10 X 1,50 Ma Cl8 Ch.17mm H.10,00mm	2		
10	6020317453-8	Hexagonal Head Bolt M8 X 1,25 X 40mm Cl8.8 Rp	2		
11	5228010001-3	Hinge Of Lateral Protection	1		
12	6020317454-6	French Head Bolt M10 X 1,50 X 50mm Cl8.8 Rp	2		
13	6020310847-0	Self-Locking Nut With Nylon M12 X 1 ,75 Ma Cl8 Ch.19mm H.12,00mm	2		
14	5530012113-5	Fixation Support Of Lateral	1		
15	5024010068-9	Smooth Washer Ø13,3 X Ø35,5 X 3,00mm	4		
16	5228010002-1	Right Hinge Of Lateral Protection		1	
16	5228010003-0	Left Hinge Of Lateral Protection			1
17	6020010395-8	Pressure Washer M12 Media	2		
18	6020310703-2	Large Lateral Right Protection		1	
18	6020310704-0	Large Lateral Left Protection			1
19	6020310700-8	Upper Protection	1		
20	5024010073-5	Smooth Washer Ø8,5 X Ø20 X 2,00mm	2		
21	6020010004-5	Pressure Washer M8 Media	2		
22	6020311009-2	Hexagonal Head Bolt M8 X 1,25 X 55mm Cl8.8 Rp	2		
23	5464010337-2	Right Lateral Protection Larger		1	
23	5464010338-0	Left Lateral Protection Complete Larger			1

• Chains Protection

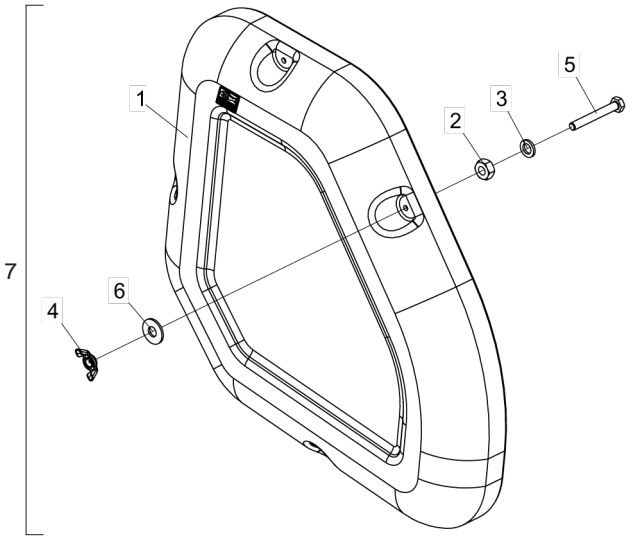

Item	Code	Product description	All	Right	Left
1	6020310701-6	Lateral Right Protection Of Chain		1	
1	6020310702-4	Lateral Left Protection Of Chain			1
2	6020310822-5	Hexagonal Nut M10 X 1,50 Ma Cl8 Ch.17mm H.8,00mm	4		
3	6020010394-0	Pressure Washer M10 Media	4		
4	6020317458-9	Nut M10 X 1,50	4		
5	6020317446-5	Hexagonal Head Bolt M10 X 1,50 X 80mm Cl8.8 Rp	4		
6	5024010075-1	Smooth Washer Ø10,3 X Ø25 X 2,00mm	4		
7	5464010335-6	Complete Right Chain Protection		1	
7	5464010336-4	Complete Left Chain Protection			1

• Lateral Plastic Nozzle

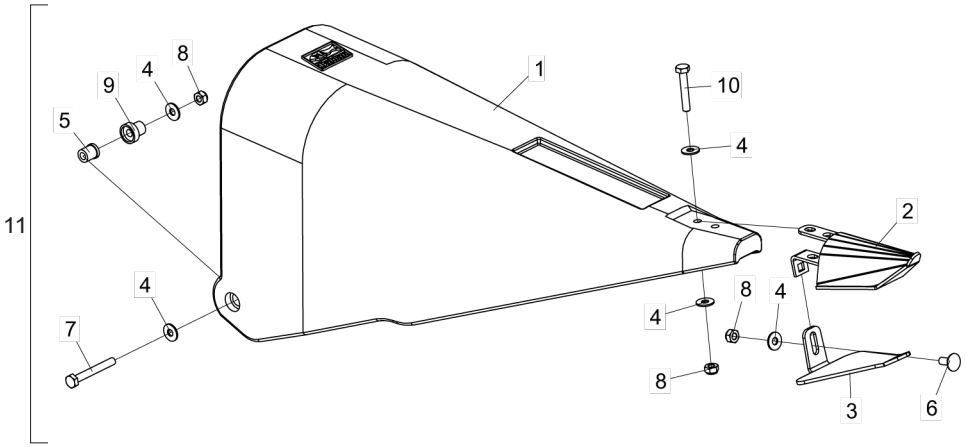

Item	Code	Product description	All
1	6020030716-2	Lateral Sweep	1
2	5054010024-9	Front Sweep	1
3	5136012960-1	Plate Of Funnel	1
4	5024010075-1	Smooth Washer Ø10,3 X Ø25 X 2,00mm	9
5	5080010799-4	Small Bushing Of Carenage	2
6	6020317445-7	French Head Bolt M10 X 1,50 X 25mm Cl8.8 Rt	1
7	6020317446-5	Hexagonal Head Bolt M10 X 1,50 X 80mm Cl8.8 Rp	2
8	6020317435-0	Self-Locking Nut With Nylon M10 X 1,50 Ma Cl8 Ch.17mm H.10,00mm	5
9	5080010798-6	Bushing W/Reduction Of Carenage	2
10	6020310151-4	Hexagonal Head Bolt M10 X 1,50 X 60mm Cl8,8 Rt	2
11	5054010029-0	Complete Plastic Sweep	1

• Complete Protection For Rows

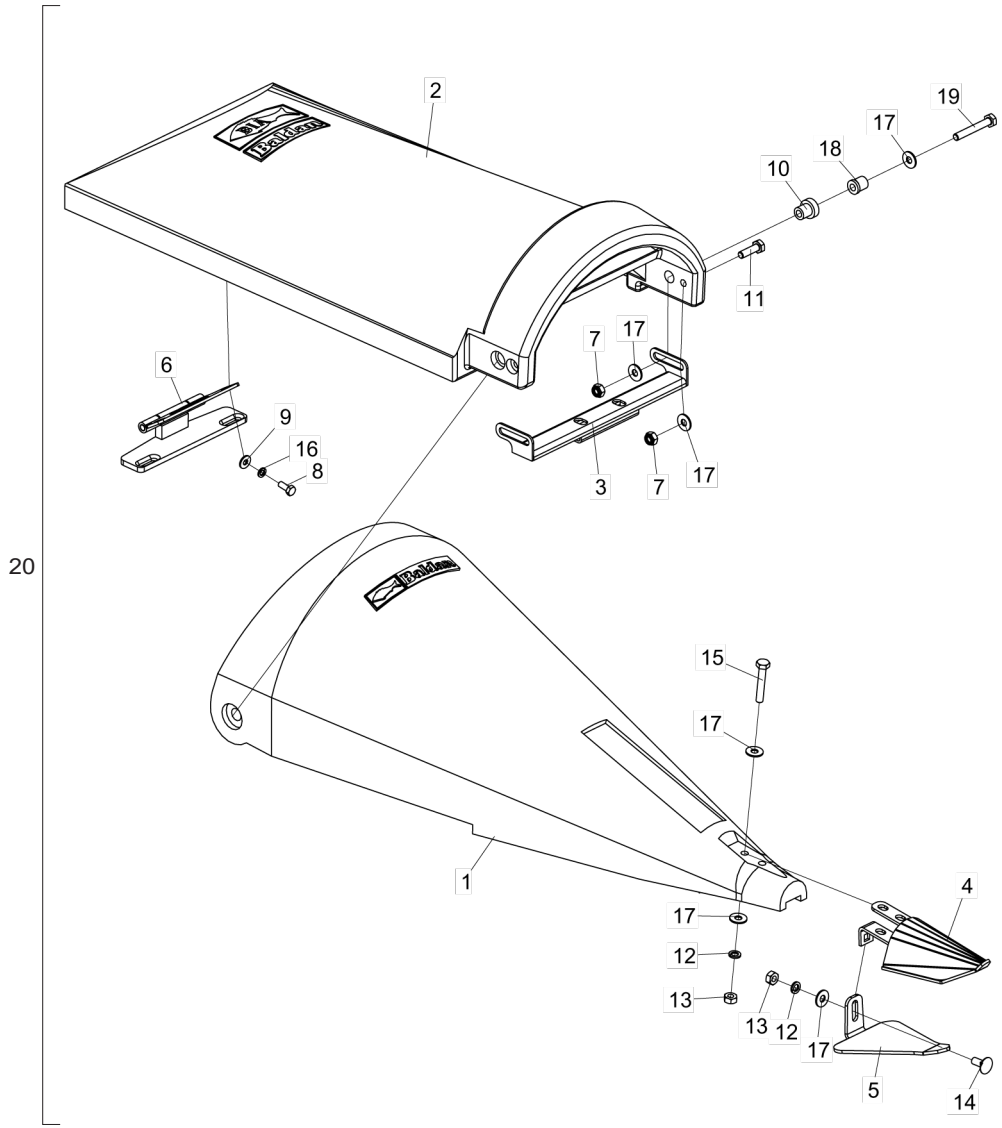

Item	Code	Product description	All	Spacing 450/500mm	Spacing 450/500mm For Height Sensor	Spacing 550/600mm	Spacing 550/600mm For Height Sensor	Spacing 650/700mm	Spacing 750/800mm	Spacing 850/900mm
1	6020055500-0	Front Fairing Dark Grey - Spacing 450/500mm		1	1					
1	6020055501-8	Front Fairing Dark Grey - Spacing 550/600mm				1	1			
1	6020055502-6	Front Fairing Dark Grey - Spacing 650/700mm						1		
1	6020055503-4	Front Fairing Dark Grey - Spacing 750/800mm							1	
1	6020055504-2	Front Fairing Dark Grey - Spacing 850/900mm								1
2	6020055505-0	Rear Fairing Dark Grey - Spacing 450/500mm		1	1					
2	6020055506-9	Rear Fairing Dark Grey - Spacing 550/600mm				1	1			
2	6020055507-7	Rear Fairing Dark Grey - Spacing 650/700mm						1		
2	6020055508-5	Rear Fairing Dark Grey - Spacing 750/800mm							1	
2	6020055509-3	Rear Fairing Dark Grey - Spacing 850/900mm								1
3	5530012187-9	Fixation Support For For Spacing 450/500mm		1	1					
3	5530012196-8	Fixation Support For For Spacing 550/600mm				1	1			
3	5530012195-0	Fixation Support For For Spacing 650/700mm						1		
3	5530012194-1	Fixation Support For For Spacing 750/800mm							1	
3	5530012193-3	Fixation Support For For Spacing 850/900mm								1
4	5054010024-9	Front Sweep	1							
5	5136012960-1	Plate Of Funnel		1		1		1	1	1
5	5136016063-0	Plate Of Funnel			1		1			
6	5530012186-0	Complete Articulation Support For Spacing 450/500mm		1	1					
6	5530012200-0	Complete Articulation Support For Spacing 550/600mm				1	1			
6	5530012199-2	Complete Articulation Support For Spacing 650/700mm						1		
6	5530012198-4	Complete Articulation Support For Spacing 750/800mm							1	
6	5530012197-6	Complete Articulation Support For Spacing 850/900mm								1
7	6020317435-0	Self-Locking Nut With Nylon M10 X 1,50 Ma Cl8 Ch.17mm H.10,00mm	4							
8	6020311269-9	Hexagonal Head Bolt M8 X 1,25 X 20mm Cl8.8 Rt	2							
9	5024010073-5	Smooth Washer Ø8,5 X Ø20 X 2,00mm	2							
10	5080010798-6	Bushing W/Reduction Of Carenage	2							
11	6020310437-8	Hexagonal Head Bolt M10 X 1,50 X 35mm Cl8.8 Rt	2							
12	6020010394-0	Pressure Washer M10 Media	3							
13	6020310822-5	Hexagonal Nut M10 X 1,50 Ma Cl8 Ch.17mm H.8,00mm	3							
14	6020317445-7	French Head Bolt M10 X 1,50 X 25mm Cl8.8 Rt	1							
15	6020310151-4	Hexagonal Head Bolt M10 X 1,50 X 60mm Cl8,8 Rt	2							
16	6020010004-5	Pressure Washer M8 Media	2							
17	5024010075-1	Smooth Washer Ø10,3 X Ø25 X 2,00mm	11							
18	5080010799-4	Small Bushing Of Carenage	2							
19	6020317444-9	Hexagonal Head Bolt M10 X 1,50 X 70mm Cl8.8 Rt	2							
20	5464010360-7	Complete Dark Gray Protection - Spacing 450/500mm		1						
20	5464010519-7	Complete Dark Gray Protection - Spacing 450/500mm For Height Sensor			1					
20	5464010361-5	Complete Dark Gray Protection - Spacing 550/600mm				1				
20	5464010524-3	Complete Dark Gray Protection - Spacing 550/600mm For Height Sensor					1			
20	5464010362-3	Complete Dark Gray Protection - Spacing 650/700mm						1		
20	5464010363-1	Complete Dark Gray Protection - Spacing 750/800mm							1	
20	5464010364-0	Complete Dark Gray Protection - Spacing 850/900mm								1

• Complete Rubber Protection

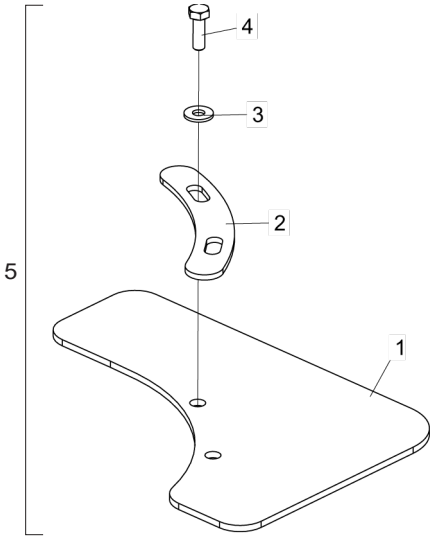

Item	Code	Product description	All	Spacing 450mm	Spacing 500mm	Spacing 550mm	Spacing 600mm	Spacing 700mm	Spacing 750mm	Spacing 800mm	Spacing 850mm	Spacing 900mm
1	6020310316-9	Protecao De Borracha P/Spacing De 450mm		1								
1	6020310317-7	Rubber Protection For Escape 500mm			1							
1	6020310318-5	Rubber Protection For Escape 550mm				1						
1	6020310319-3	Rubber Protection For Escape 600mm					1					
1	6020310322-3	Rubber Protection For Escape 700mm						1				
1	6020310323-1	Rubber Protection For Escape 750mm							1			
1	6020310324-0	Rubber Protection For Escape 800mm								1		
1	6020310325-8	Rubber Protection For Escape 850mm									1	
1	6020310326-6	Rubber Protection For Escape 900mm										1
2	5136014709-0	Fixation Plate Of Protection Of 450 A 700mm		1	1	1	1	1				
2	5136014710-3	Fixation Plate Of Protection Of 750 A 900mm							1	1	1	1
3	5024010073-5	Smooth Washer Ø8,5 X Ø20 X 2,00mm	2									
4	6020310448-3	Hexagonal Head Bolt M8 X 1,25 X 25mm Cl8.8 Rt	2									
5	5464010245-7	Complete Rubber Protection For Spacing 450mm		1								
5	5464010246-5	Complete Rubber Protection For Spacing 500mm			1							
5	5464010247-3	Complete Rubber Protection For Spacing 550mm				1						
5	5464010248-1	Complete Rubber Protection For Spacing 600mm					1					
5	5464010250-3	Complete Rubber Protection For Spacing 700mm						1				
5	5464010251-1	Complete Rubber Protection For Spacing 750mm							1			
5	5464010252-0	Complete Rubber Protection For Spacing 800mm								1		
5	5464010253-8	Complete Rubber Protection For Spacing 850mm									1	
5	5464010254-6	Complete Rubber Protection For Spacing 900mm										1

• Complete Protection For Lateral

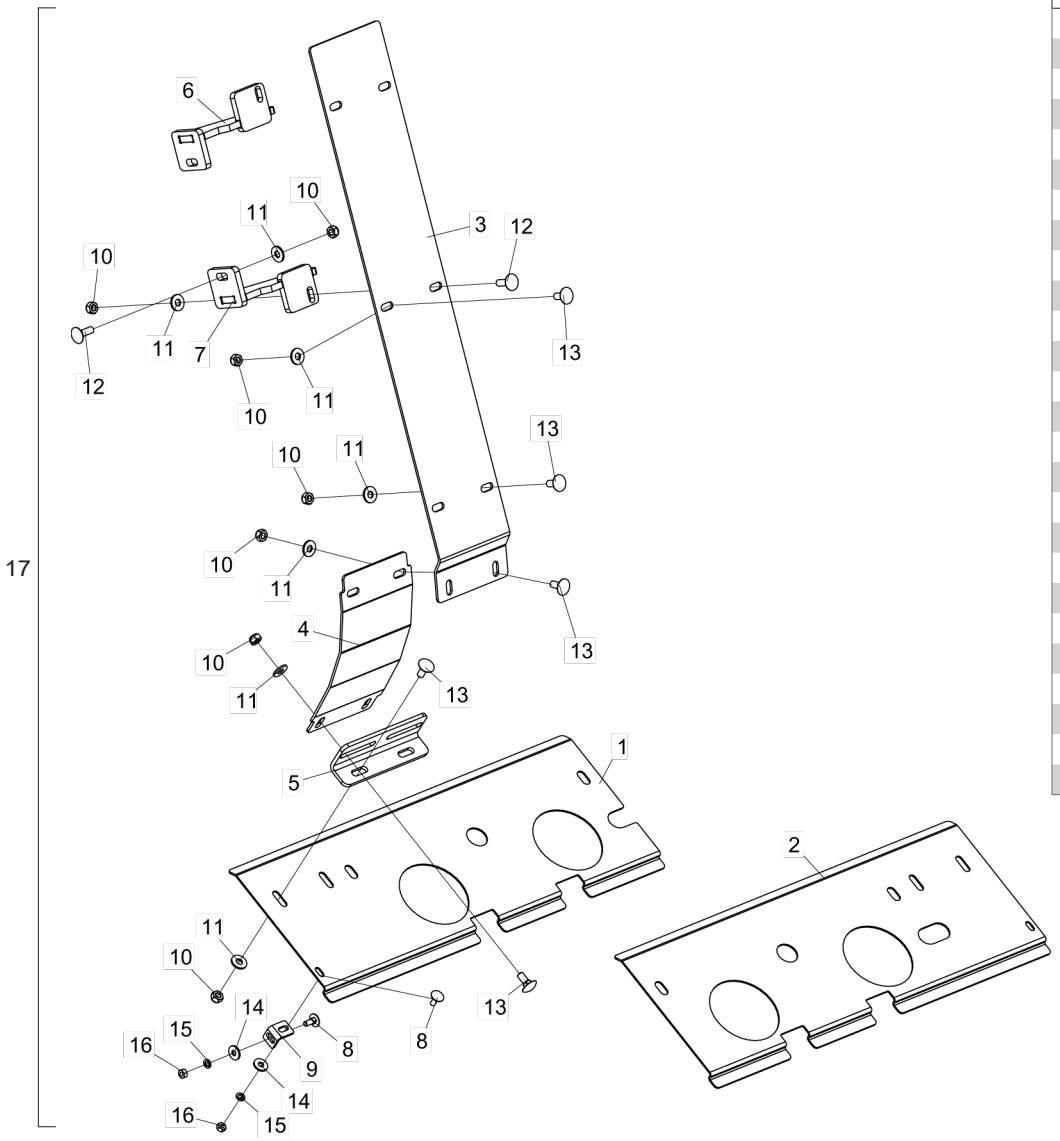

Item	Code	Product description	All	46mm	51mm	76mm	101mm
1	5464010343-7	Right Upper Protection Of Box - Lateral 46mm		1			
1	5464010346-1	Right Upper Protection Of Box - Lateral 51mm			1		
1	5464010349-6	Right Upper Protection Of Box - Lateral 76mm				1	
1	5464010352-6	Right Upper Protection Of Box - Lateral 101mm					1
2	5464010344-5	Left Upper Protection Of Box - Lateral 46mm		1			
2	5464010347-0	Left Upper Protection Of Box - Lateral 51mm			1		
2	5464010350-0	Left Upper Protection Of Box - Lateral 76mm				1	
2	5464010353-4	Left Upper Protection Of Box - Lateral 101mm					1
3	5464010354-2	Lateral Large Protection	2				
4	5464010355-0	Central Protection Of Lateral	2				
5	5136015009-0	Plate "L" De 34,5 X 44,5 X 145mm	2				
6	5530015422-0	Left Fixation Support Of Protection	2				
7	5530015421-1	Right Fixation Support Of Protection	2				
8	6020317455-4	French Head Bolt M6 X 1,00 X 16mm Cl8.8 Rp	4				
9	5136012867-2	Plate "L" 20 X 30 X 2mm	2				
10	6020317449-0	Self-Locking Nut With Nylon Low M8 X 1,25 Ma Cl8 Ch.13mm H.8,00mm	28				
11	5024010073-5	Smooth Washer Ø8,5 X Ø20 X 2,00mm	28				
12	6020317457-0	French Head Bolt M8 X 1,25 X 25mm Cl8.8 Rt	8				
13	6020317452-0	French Head Bolt M8 X 1,25 X 20mm Cl8.8 Rt	20				
14	5024010161-8	Smooth Washer Ø7 X Ø18 X 2,00mm	4				
15	6020010122-0	Pressure Washer M6 Media	4				
16	6020311257-5	Hexagonal Nut M6 X 1,00 Ma Cl8 Ch.10mm H.5,00mm	4				
17	5464010342-9	Lateral Protection 46mm Complete		1			
17	5464010345-3	Lateral Protection 51mm Complete			1		
17	5464010348-8	Lateral Protection 76mm Complete				1	
17	5464010351-8	Lateral Protection 101mm Complete					1

• Fixation Lateral Support of Protection

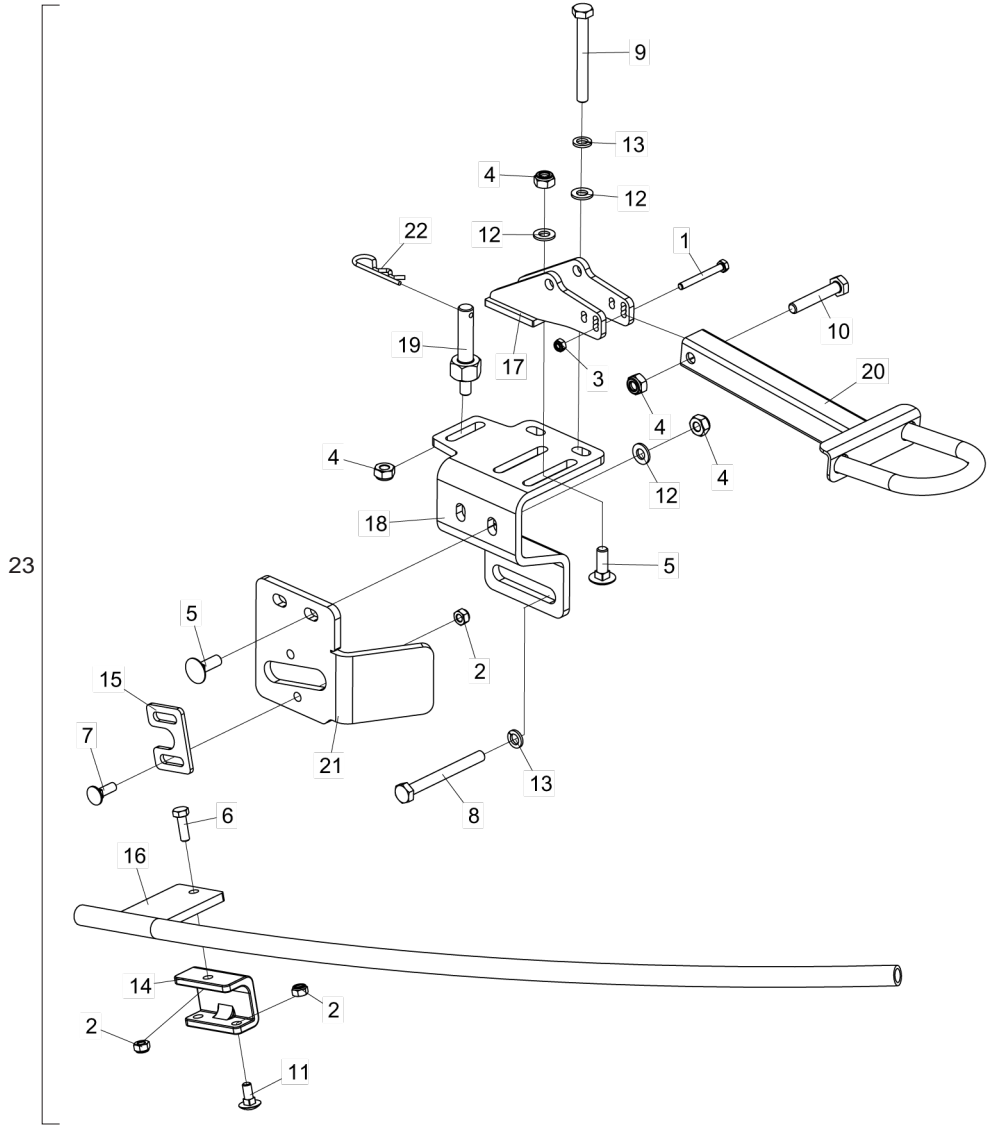

Item	Code	Product description	All	Right	Left
1	6020317479-1	Hexagonal Head Bolt M6 X 1,00 X 55mm Cl8.8 Rp	1		
2	6020317449-0	Self-Locking Nut With Nylon Low M8 X 1,25 Ma Cl8 Ch.13mm H.8,00mm	5		
3	6020317442-2	Self-Locking Nut With Nylon Low M6 X 1,00 Ma Cl8 Ch.10mm H.6,00mm	1		
4	6020317435-0	Self-Locking Nut With Nylon M10 X 1,50 Ma Cl8 Ch.17mm H.10,00mm	6		
5	6020317544-5	French Head Bolt M10 X 1,50 X 30mm Cl8.8 Rt	4		
6	6020310448-3	Hexagonal Head Bolt M8 X 1,25 X 25mm Cl8.8 Rt	1		
7	6020317457-0	French Head Bolt M8 X 1,25 X 25mm Cl8.8 Rt	2		
8	6020317463-5	Hexagonal Head Bolt M10 X 1,50 X 100mm Cl8.8 Rp	2		
9	6020317438-4	Hexagonal Head Bolt M10 X 1,50 X 90mm Cl8.8 Rp	2		
10	6020310151-4	Hexagonal Head Bolt M10 X 1,50 X 60mm Cl8,8 Rt	1		
11	6020317452-0	French Head Bolt M8 X 1,25 X 20mm Cl8.8 Rt	2		
12	5024010466-8	Smooth Washer Ø10,3 X Ø20 X 2,00mm	6		
13	6020010394-0	Pressure Washer M10 Media	4		
14	6010602659-1	Fixation Support Of Rod	1		
15	5136014937-8	Fixation Plate Of Rod	1		
16	5530015381-9	Guide Support Of Lateral	1		
17	5530012242-5	Fixation Support Of Protection	1		
18	5136014047-8	Right Plate Of Latereal Back		1	
18	5136013038-3	Lateral Plate Of Support			1
19	5232011380-6	Hexagonal Shaft Of Lateral Fixation	1		
20	5530012184-4	Nozzle Support For Transport	1		
21	5136014935-1	Right Fixation Plate Of Support		1	
21	5136014936-0	Fixation Plate Of Rod			1
22	6020390294-0	Lock Nma - Type "R" Ø3,5 X 67mm(Special)	1		
23	5530015379-7	Fixation Right Lateral Support Of Protection		1	
23	5530015380-0	Fixation Left Lateral Support Of Protection			1

• Sensor Complete Support JOHN DEERE-MASSEY-VALTRA

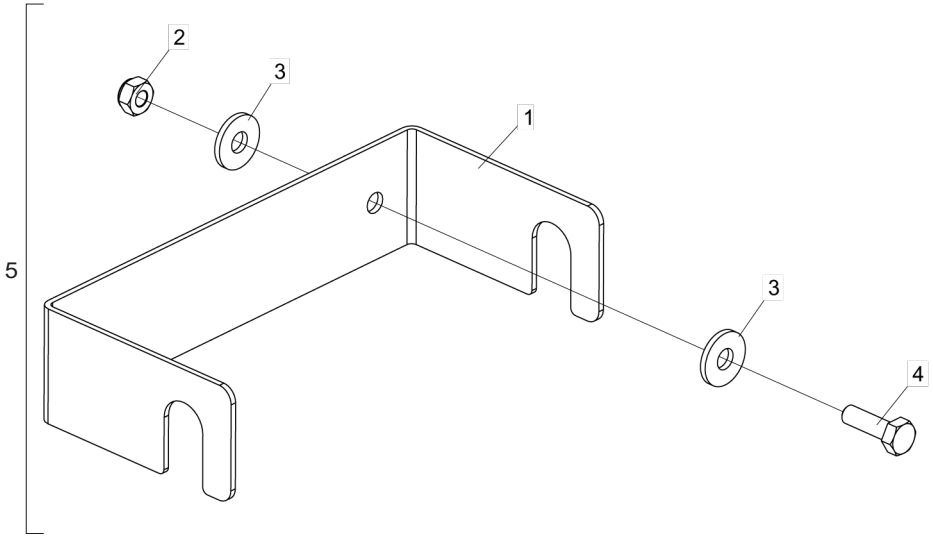

Item	Code	Product description	All
1	5136016252-8	Fixation Plate of Sensor (John Deere/Massey/Valtra)	1
2	6020317442-2	Self-Locking Nut With Nylon Low M6 X 1,00 Ma Cl8 Ch.10mm H.6,00mm	2
3	5024010161-8	Smooth Washer Ø7 X Ø18 X 2,00mm	4
4	6020312403-4	Hexagonal Head Bolt M6 X 1,00 X 20mm Cl8.8 Rt	2
5	5530016159-5	Complete Support Of Sensor John Deere/Mas+C207:C250Sey/Valtra	1

• Rows Union Support

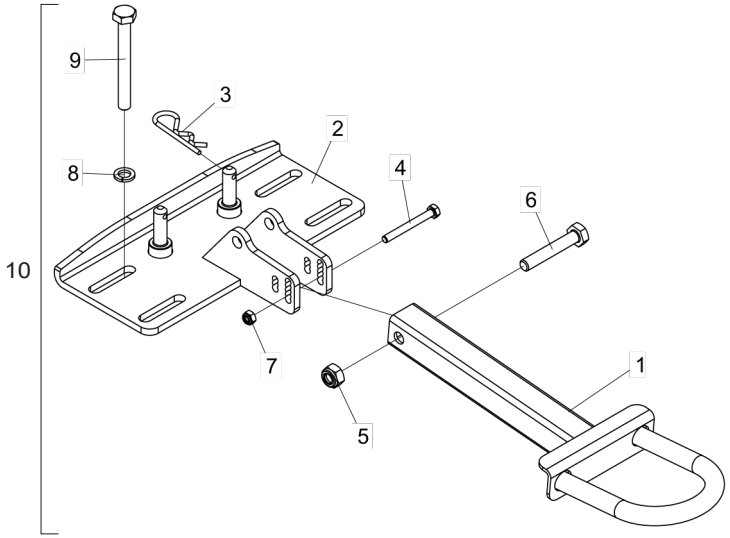

Item	Code	Product description	All	Spacing 450/500mm	Spacing 550/600mm	Spacing 650/700mm	Spacing 750/800mm	Spacing 850/900mm
1	5530012184-4	Nozzle Support For Transport	1					
2	5530012268-9	Union Support Of Rows - 450/500mm		1				
2	5530012231-0	Union Support Of Rows - 550/600mm			1			
2	5530012232-8	Union Support Of Rows - 650/700mm				1		
2	5530012233-6	Union Support Of Rows - 750/800mm					1	
2	5530015412-2	Union Support Of Rows - 850/900mm						1
3	6020390294-0	Lock Nma - Type "R" Ø3,5 X 67mm(Special)	2					
4	6020317479-1	Hexagonal Head Bolt M6 X 1,00 X 55mm Cl8.8 Rp	1					
5	6020317435-0	Self-Locking Nut With Nylon M10 X 1,50 Ma Cl8 Ch.17mm H.10,00mm	1					
6	6020310151-4	Hexagonal Head Bolt M10 X 1,50 X 60mm Cl8,8 Rt	1					
7	6020317442-2	Self-Locking Nut With Nylon Low M6 X 1,00 Ma Cl8 Ch.10mm H.6,00mm	1					
8	6020010394-0	Pressure Washer M10 Media	4					
9	6020317438-4	Hexagonal Head Bolt M10 X 1,50 X 90mm Cl8.8 Rp	4					
10	5530012235-2	Union Support Of Rows - Spacing 450/500mm		1				
10	5530012236-0	Union Support Of Rows - Spacing 550/600mm			1			
10	5530012228-0	Union Support Of Rows - Spacing 650/700mm				1		
10	5530012229-8	Union Support Of Rows - Spacing 750/800mm					1	
10	5530015411-4	Union Support Of Lines For Spacing 850/900mm						1

• Complete Harvester Row

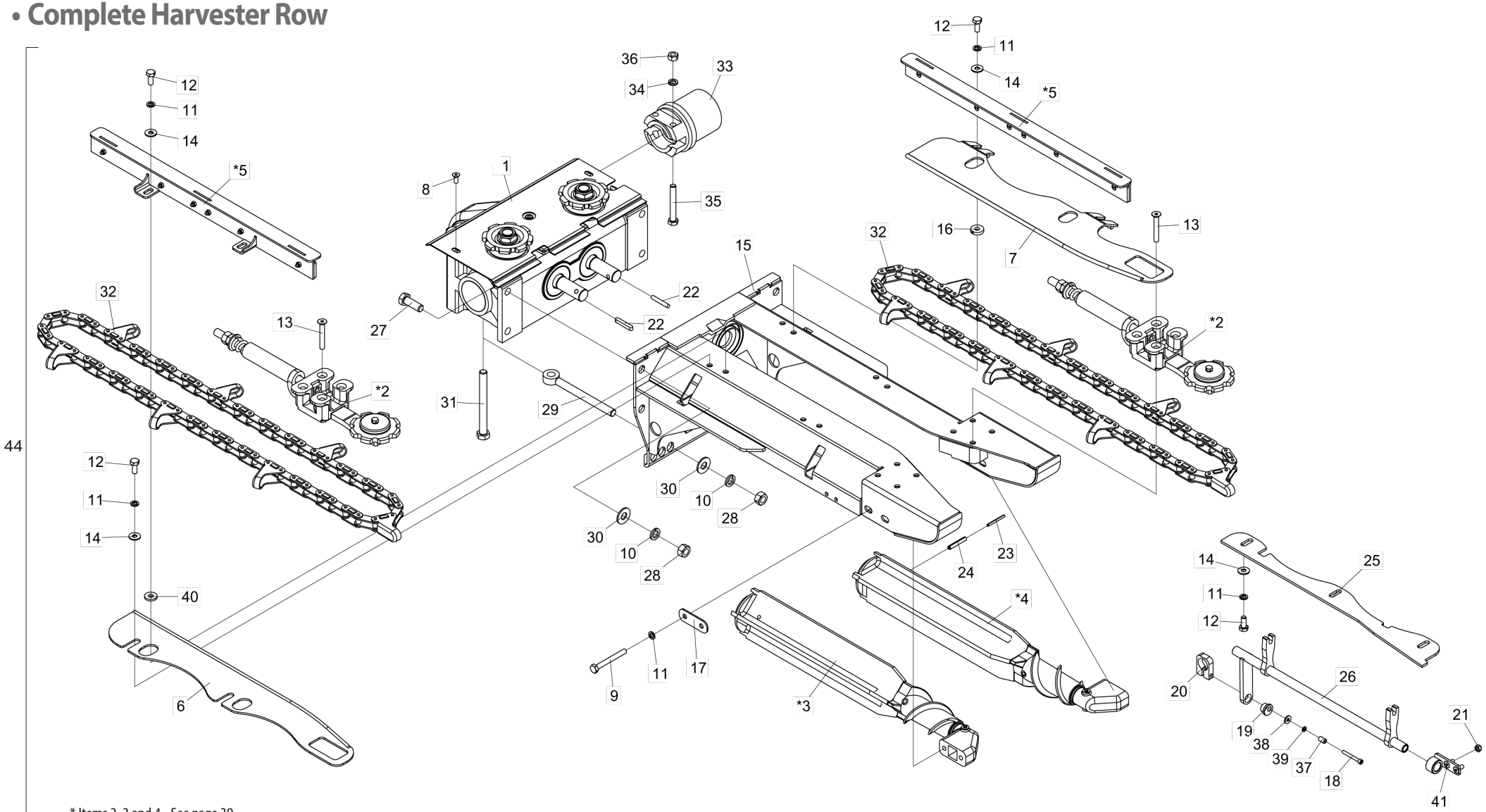

* Items 2, 3 and 4 - See page 39

* Item 5 - See page 40

The Harvester Row (44) is made up of all the Items listed in this list. However, when sold complete, Items 42 and 43 will not accompany it.

BALDAN

• Table Complete Harvester Row

Item	Code	Product description	All	Without Torque Limiter	With Torque Limiter	Without Torque Limiter - Aluminium Box	With Torque Limiter - Aluminium Box
1	6020058058-6	Complete Transmision Box With Limiter		1			
1	6020058059-4	Complete Transmision Box With Limiter			1		
1	6020058678-9	Complete Transmission Box Without Limiter - Aluminium				1	
1	6020058065-9	Complete Transmision Box With Limiter					1
*2	5268010721-1	Complete Chain Stretcher	2				
*3	5530012104-6	Complete Right Roll Support	1				
*4	5530012105-4	Complete Left Roll Support	1				
*5	5530012094-5	Complete Support Of Chain	2				
6	5530012098-8	Complete Guide Support	1				
7	5530016053-0	Complete Right Guide Support	1				
8	6020310158-1	Flat Head Allen Bolt M8 X 1,25 X 20mm Cl8.8 Rp (Phosphated)		6	2	6	2
9	6020317438-4	Hexagonal Head Bolt M10 X 1,50 X 90mm Cl8.8 Rp	4				
10	6020010124-6	Pressure Washer M16 Media	6				
11	6020010394-0	Pressure Washer M10 Media	16				
12	6020310452-1	Hexagonal Head Bolt M10 X 1,50 X 25mm Cl8.8 Rt	12				
13	6020317439-2	Flat Head Allen Bolt M10 X 1,50 X 70mm Cl12.9 Rp (Phosphated)	4				
14	5024010075-1	Smooth Washer Ø10,3 X Ø25 X 2,00mm	12				
15	5530016051-3	Support Of Row	1				
16	5024010708-0	Washer De Ø11 X Ø27 X 4,75mm	2				
17	5136012854-0	Plate Of Bold	2				
18	6020311261-3	Allen Bolt C/C M6 X 1,00 X 50mm Ma Cl12.9 Rp (Phosphated)	1				
19	5080011594-6	Bushing Of Ø19 X Ø1" X 15mm	1				
20	5136016029-0	Fixation Plate Of Rod	1				
21	6020317449-0	Self-Locking Nut With Nylon Low M8 X 1,25 Ma Cl8 Ch.13mm H.8,00mm	4				
22	5140010037-7	Cotter Of 7,5 X 7,9 X 49,5mm	2				
23	6020310540-4	Heavy Elastic Pin Ø5 X 50mm	2				
24	6020310499-8	Heavy Elastic Pin Ø8 X 50mm	2				
25	5274010079-3	Lower Blade	2				
26	5530016058-0	Opening And Closing Right Support Of Knifes	1				
27	6020311270-2	Hexagonal Head Bolt M16 X 2,00 X 45mm Cl8.8 Rt	4				
28	6020310818-7	Hexagonal Nut M16 X 2,00 Ma Cl8 Ch.24mm H.13,00mm	6				
29	5566010175-5	Complete Rod With Washer	2				

Item	Code	Product description	All	Without Torque Limiter	With Torque Limiter	Without Torque Limiter - Aluminium Box	With Torque Limiter - Aluminium Box
30	5024010239-8	Smooth Washer Ø16,5 X Ø37 X 3,00mm	6				
31	6020310073-9	Hexagonal Head Bolt M16 X 2,00 X 160mm Cl8.8 Rp	2				
32	6020051129-0	Agricultural Conveyor Chain Ca2060H C6E 49 Normal Links + 7	2				
33	6020230094-7	Power Limiter Of Row 550N.M(60C203002) Of Box			1		1
34	6020010395-8	Pressure Washer M12 Media			2		2
35	6020317495-3	Hexagonal Head Bolt M12 X 1,75 X 90mm Cl8.8 Rp			2		2
36	6020310820-9	Hexagonal Nut M12 X 1,75 Ma Cl8 Ch.19mm H.10,00mm			2		2
37	5080011727-2	Bushing Ø6,5 X Ø3/8" X 16mm	1				
38	5024010161-8	Smooth Washer Ø7 X Ø18 X 2,00mm	1				
39	6020010122-0	Pressure Washer M6 Media	1				
40	5024010464-1	Smooth Washer Ø11 X Ø27 X 4,00mm	2				
41	5530016059-9	Articulation Right Support Of Shaft Of Knife	2				
42	5552010464-9	Tube Ø40 X Ø38 X 174mm(Spacing 450mm)	1				
42	5552010419-3	Tube Ø40 X Ø38 X 340mm(Spacing 450mm)	1				
42	5552010465-7	Tube Ø40 X Ø38 X 224mm(Spacing 500mm)	1				
42	5552010420-7	Tube Ø40 X Ø38 X 390mm(Spacing 500mm)	1				
42	5552010466-5	Tube Ø40 X Ø38 X 274mm(Spacing 550mm)	1				
42	5552010467-3	Tube Ø40 X Ø38 X 324mm(Spacing 600mm)	1				
42	5552010422-3	Tube Ø40 X Ø38 X 490mm(Spacing 600mm)	1				
42	5552010469-0	Tube Ø40 X Ø38 X 424mm(Spacing 700mm)	1				
42	5552010424-0	Tube Ø40 X Ø38 X 590mm(Spacing 700mm)	1				
42	5552010470-3	Tube Ø40 X Ø38 X 474mm(Spacing 750mm)	1				
42	5552010471-1	Tube Ø40 X Ø38 X 524mm(Spacing 800mm)	1				
42	5552010472-0	Tube Ø40 X Ø38 X 574mm(Spacing 850mm)	1				
42	5552010473-8	Tube Ø40 X Ø38 X 624mm(Spacing 900mm)	1				
42	5552010428-2	Tube Ø40 X Ø38 X 790mm(Spacing 900mm)	1				
43	5024010490-0	Washer With Hexagonal Hole Ø32mm	1				
44	2517012360-6	Complete Right Harvester Row Without Torque Limiter		1			
44	2517012370-3	Complete Right Harvester Row W/Torque Limiter W/Opening and Closure Adjustment			1		
44	2517012415-7	Complete Right Harvester Row Without Torque Limiter W/Aluminium Box				1	
44	2517012358-4	Complete Right Harvester Row W/Power Limiter W/Aluminium Box					1

• Complete Chain Stretcher

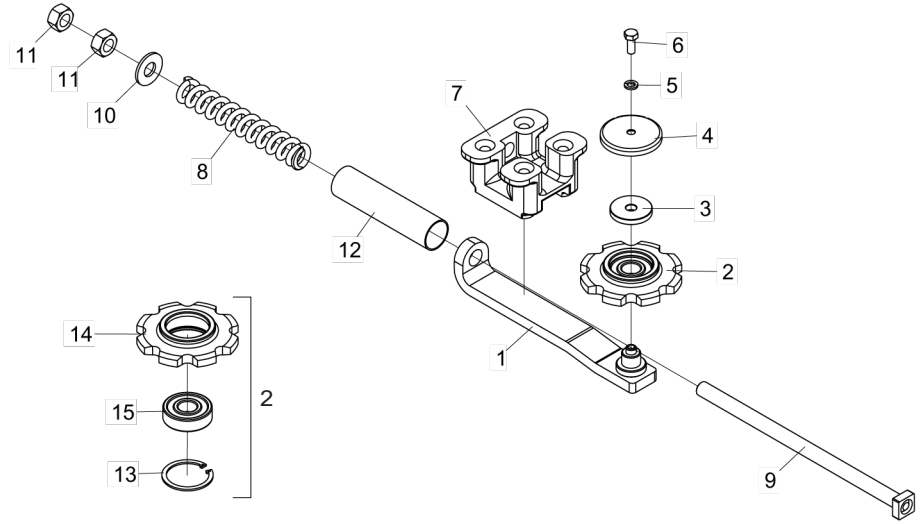

Item	Code	Product description	All
1	5072010158-8	Front Arm	1
2	5256010194-5	Complete Gear 8 Teeth	1
3	5024010463-3	Back Washer	1
4	5538010514-3	Cover Of Stretcher	1
5	6020010404-0	Pressure Washer 5/16" Media Industry	1
6	6020311269-9	Hexagonal Head Bolt M8 X 1,25 X 20mm Cl8.8 Rt	1
7	5044010191-4	Support Base	1
8	6020250373-2	Helical Spring Ø18 X Ø30 X 178mm	1
9	5420010074-6	Welding Bolt	1
10	5024010239-8	Smooth Washer Ø16,5 X Ø37 X 3,00mm	2
11	6020317434-1	Hexagonal Nut M16 X 1,50 Mb Cl8 Ch.24mm H.13,00mm	2
12	5552010388-0	Tube Of Ø34,92 X 139mm	1
13	6020010016-9	Retaining Ring I-51	1
14	5256010195-3	Gear 8 Teeth	1
15	6020350865-7	Sphere Rigid Bearing 6304Zz (1ºline)	1

• Suporte do Rolete Completo

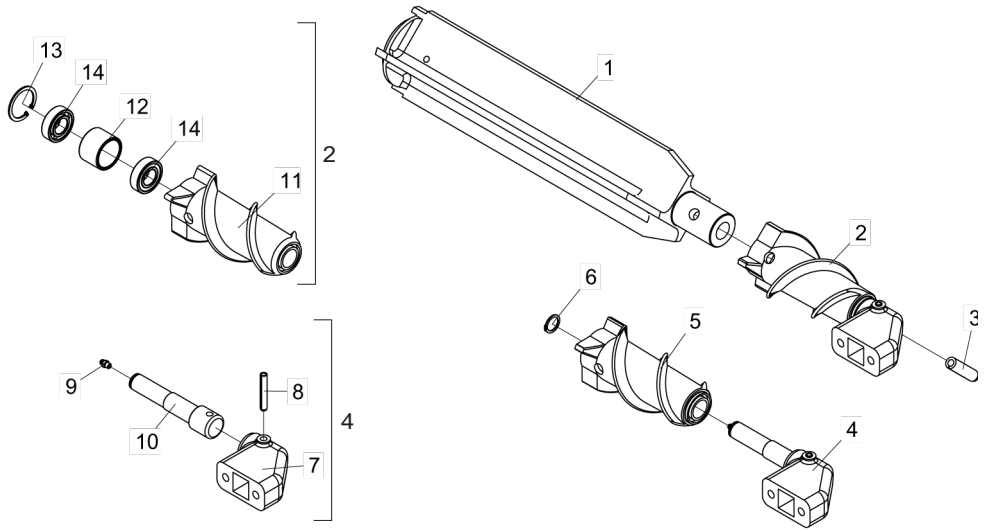

Item	Code	Product description	All	Right	Left
1	5502010036-1	Right Roller		1	
1	5502010037-0	Left Roller			1
2	5044010189-2	Complete Right Transmission Base		1	
2	5044010190-6	Complete Left Transmission Base			1
3	6020310476-9	Heavy Elastic Pin Ø14 X 55mm	1		
4	5044010187-6	Complete Helical Conductor Base	1		
5	5150010045-5	Complete Right Helical Conductor		1	
5	5150010047-1	Complete Left Helical Conductor			1
6	6020010206-4	Retaining Oring	1		
7	5044010188-4	Base Of Helical Conductor	1		
8	6020310499-8	Heavy Elastic Pin Ø8 X 50mm	1		
9	6020130100-1	Grease Fitting 1/4"	1		
10	5232010986-8	Small Shaft Of Conductor	1		
11	5150010046-3	Right Helical Conductor		1	
11	5150010048-0	Left Helical Conductor			1
12	5080010793-5	Back Bushing	1		
13	6020010305-2	Retaining Ring I-42	1		
14	6020350866-5	Sphere Rigid Bearing 6004Z (1º Line)	2		

• Complete Chain Support

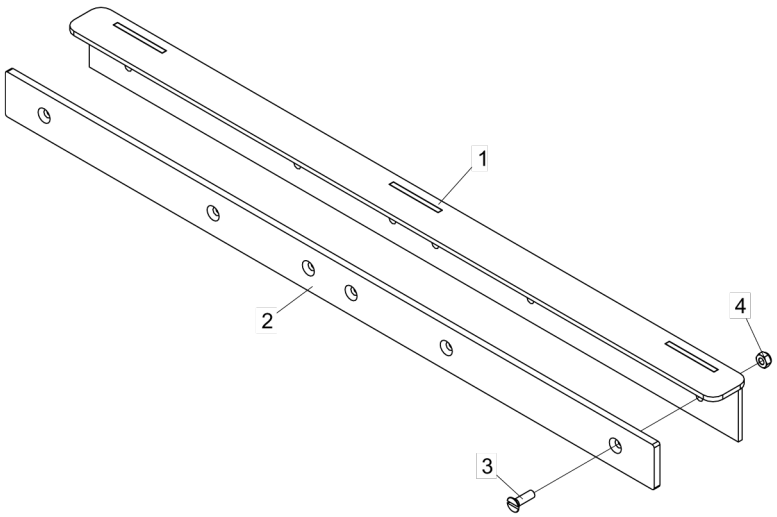

Item	Code	Product description	All
1	5530012095-3	Support Of Chain	1
2	5044010186-8	Polyethylene Base	1
3	6020317441-4	Bolt M6 X 1,00 X 20mm Cl8.8 Rt	6
4	6020317442-2	Self-Locking Nut With Nylon Low M6 X 1,00 Ma Cl8 Ch.10mm H.6,00mm	6

• Complete Oil Deposit (Functional Main Frame W/Cutout)

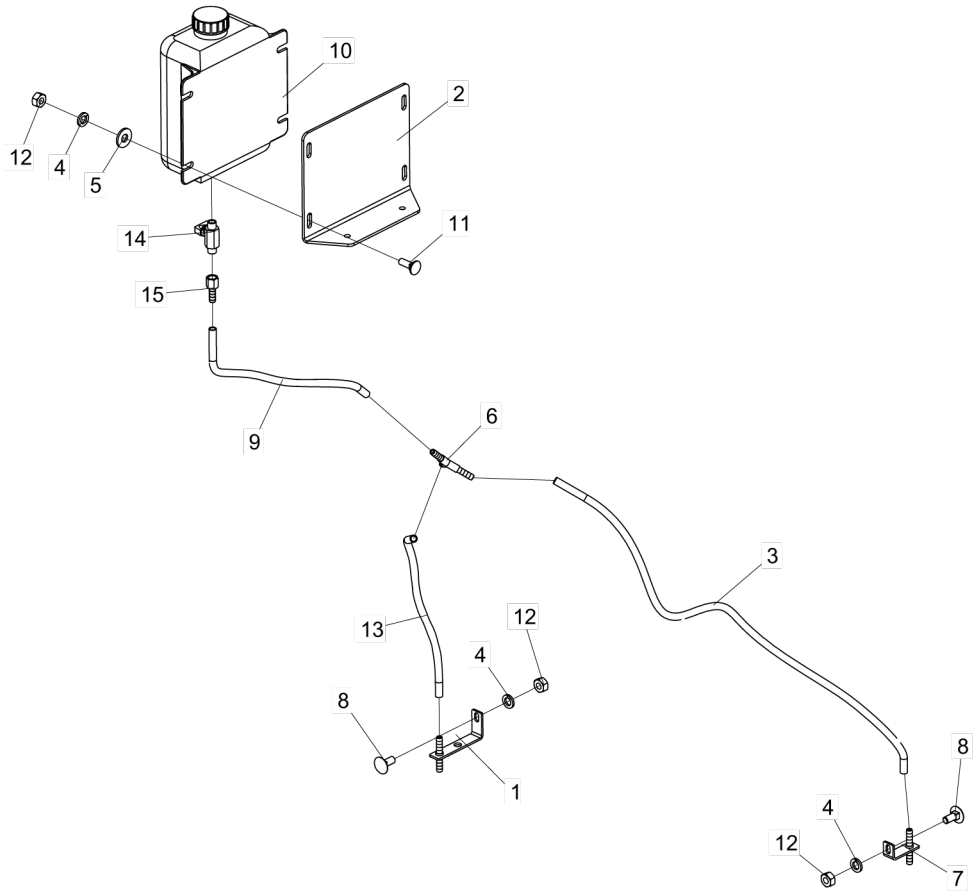

Item	Code	Product description	All	Right	Left
1	5530012254-9	Larger Support With Amendment			1
2	5530012255-7	Left Support Of Tank	1		
3	5372010484-5	Crystal Hose Ø5/16" X 1,5 X 800mm			1
4	6020010004-5	Pressure Washer M8 Media		7	8
5	5024010073-5	Smooth Washer Ø8,5 X Ø20 X 2,00mm	4		
6	6020090595-7	Amendment Type "Y" 5/16" (Baldan) (Ref.161-*-Y)			1
7	5530012253-0	Small Support With Amendment	1		
8	6020317452-0	French Head Bolt M8 X 1,25 X 20mm Cl8.8 Rt		1	2
9	5372010487-0	Crystal Hose Ø5/16" X 1,5 X 1200mm		1	
9	5372010486-1	Crystal Hose Ø5/16" X 1,5 X 370mm			1
10	6020071154-0	Oil Hopper With Cover	1		
11	6020317457-0	French Head Bolt M8 X 1,25 X 25mm Cl8.8 Rt	6		
12	6020310454-8	Hexagonal Nut M8 X 1,25 Ma Cl8 Ch.13mm H.6,50mm		7	8
13	5372010485-3	Crystal Hose Ø5/16" X 1,5 X 330mm			1
14	6020430241-6	Sphere Valve (Ref.mmm-1/4")	1		
15	6020090597-3	Espigao Ff 1/4" Bsp X 5/16" Esc. (Ref.752-Bsp)	1		

• Complete Oil Deposit (Functional Main Frame W/Cutout For Plug)

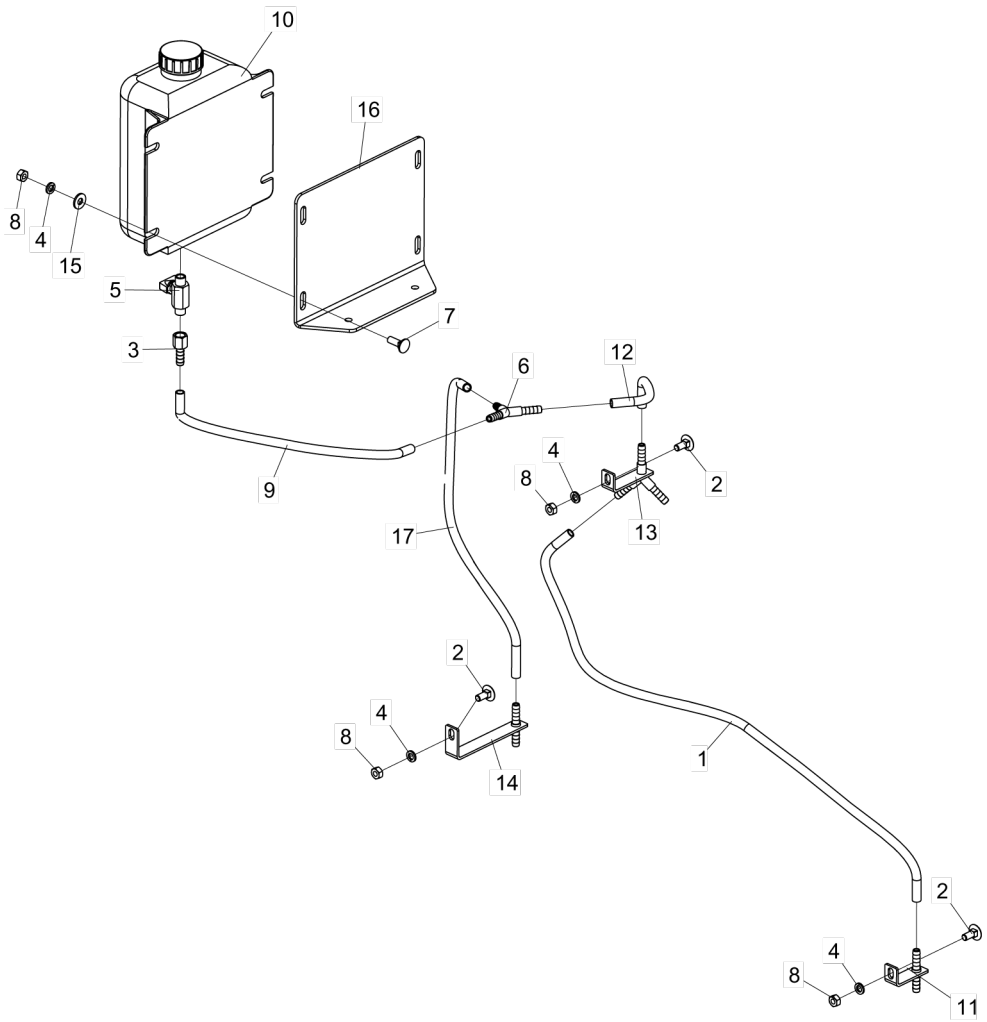

Item	Code	Product description	All	Upper Plug	Lower Plug
1	5372010484-5	Crystal Hose Ø5/16" X 1,5 X 800mm		1	
1	5372010492-6	Crystal Hose Ø5/16" X 1,5 X 770mm			1
2	6020317452-0	French Head Bolt M8 X 1,25 X 20mm Cl8.8 Rt		2	3
3	6020090597-3	Espigao Ff 1/4" Bsp X 5/16" Esc. (Ref.752-Bsp)	1		
4	6020010004-5	Pressure Washer M8 Media		8	9
5	6020430241-6	Sphere Valve (Ref.mmm-1/4")	1		
6	6020090595-7	Amendment Type "Y" 5/16" (Baldan) (Ref.161-*-Y)	1		
7	6020317457-0	French Head Bolt M8 X 1,25 X 25mm Cl8.8 Rt	6		
8	6020310454-8	Hexagonal Nut M8 X 1,25 Ma Cl8 Ch.13mm H.6,50mm		8	9
9	5372010486-1	Crystal Hose Ø5/16" X 1,5 X 370mm		1	
9	5372010491-8	Crystal Hose Ø5/16" X 1,5 X 350mm			1
10	6020071154-0	Oil Hopper With Cover	1		
11	5530012253-0	Small Support With Amendment	1		
12	5372010494-2	Crystal Hose Ø5/16" X 1,5 X 135mm			1
13	5530012274-3	Small Support With Amendment "Y"			1
14	5530012254-9	Larger Support With Amendment		1	
14	5530012275-1	Larger Support With Amendment			1
15	5024010073-5	Smooth Washer Ø8,5 X Ø20 X 2,00mm	4		
16	5530012255-7	Left Support Of Tank	1		
17	5372010485-3	Crystal Hose Ø5/16" X 1,5 X 330mm		1	
17	5372010493-4	Crystal Hose Ø5/16" X 1,5 X 543mm			1

• Complete Oil Deposit (Functional Main Frame W/Cutout For Upper Plug)

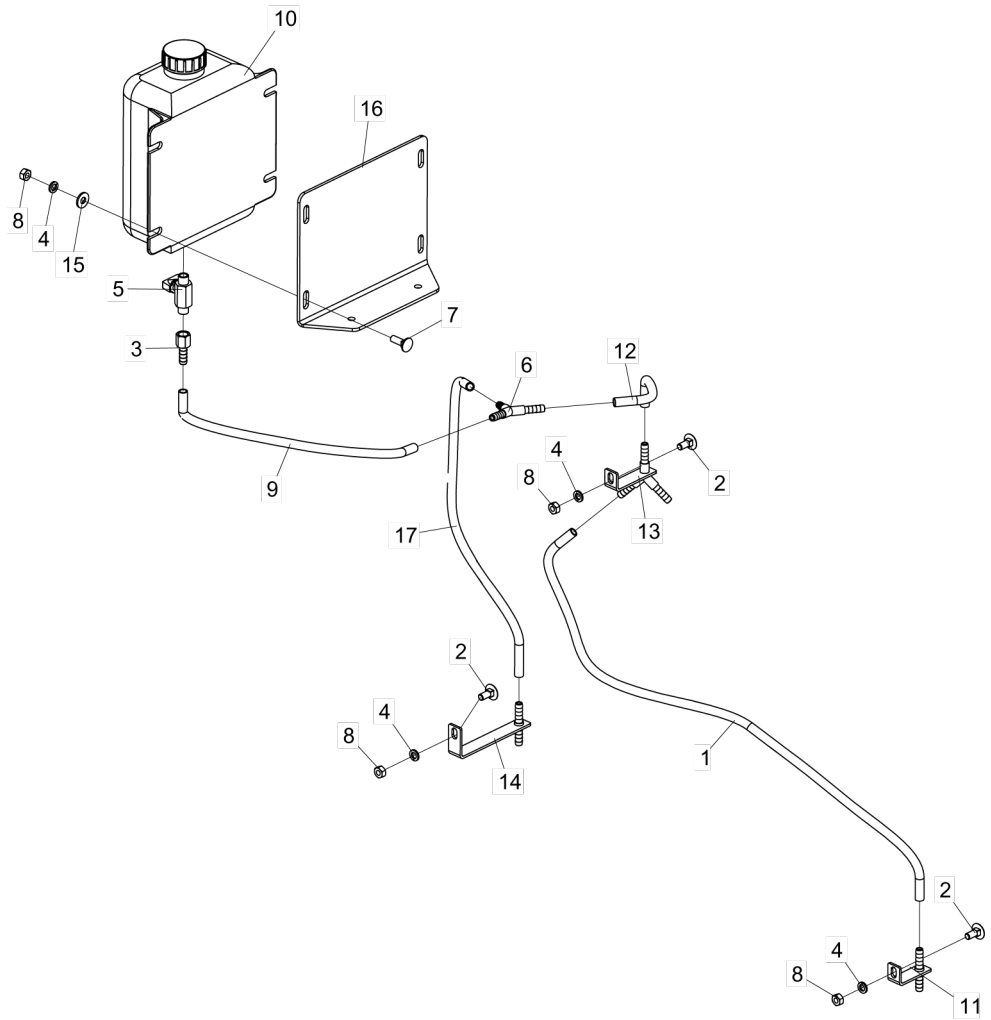

Item	Code	Product description	All	Right	Left
1	5372010492-6	Crystal Hose Ø5/16" X 1,5 X 770mm			1
2	6020317452-0	French Head Bolt M8 X 1,25 X 20mm Cl8.8 Rt		1	3
3	6020090597-3	Espigao Ff 1/4" Bsp X 5/16" Esc. (Ref.752-Bsp)	1		
4	6020010004-5	Pressure Washer M8 Media		7	9
5	6020430241-6	Sphere Valve (Ref.mmm-1/4")	1		
6	6020090595-7	Amendment Type "Y" 5/16" (Baldan) (Ref.161-*-Y)			1
7	6020317457-0	French Head Bolt M8 X 1,25 X 25mm Cl8.8 Rt	6		
8	6020310454-8	Hexagonal Nut M8 X 1,25 Ma Cl8 Ch.13mm H.6,50mm		7	9
9	5372010487-0	Crystal Hose Ø5/16" X 1,5 X 1200mm		1	
9	5372010491-8	Crystal Hose Ø5/16" X 1,5 X 350mm			1
10	6020071154-0	Oil Hopper With Cover	1		
11	5530012253-0	Small Support With Amendment	1		
12	5372010494-2	Crystal Hose Ø5/16" X 1,5 X 135mm			1
13	5530012274-3	Small Support With Amendment "Y"			1
14	5530012275-1	Larger Support With Amendment			1
15	5024010073-5	Smooth Washer Ø8,5 X Ø20 X 2,00mm	4		
16	5530012255-7	Left Support Of Tank	1		
17	5372010493-4	Crystal Hose Ø5/16" X 1,5 X 543mm			1

BALDAN

• Cardans

Cardan with two hexagonal 1.1/4 " terminals	
Ideal / MF 3640 / 5650 (Old) / 6845 a 6855	
New Holland (Main Frame Starting 5060)	
Code	**Main Frame Width**
6020050827-3	4160 / Ideal 3260
6020050828-1	4650 / Ideal 3710
6020050829-0	5060 / Ideal 4160
6020055050-4	5510 / Ideal 4650
6020055091-1	5960 / 7760
6020055092-0	6410 / 8210
6020055053-9	6860 / 8660 / 9110

Cardan With 1.1/4" and 1.1/8" Hexagonal	
Case 2366 / 2388 / 2399	
Code	**Main Frame Width**
6020055078-4	3260 / 3710 / 4160
6020055079-2	4650 / 5060
6020055080-6	5510 / 7310
6020055093-8	5960 / 7760
6020055075-0	6410 / 8210
6020055081-4	6860 / 8660 / 9110
With Clutch on Hex 1.1/4"	
6020055085-7	3260 / 3710 / 4160
6020055086-5	4650 / 5060
6020055087-3	5510 / 7310
6020055094-6	5960 / 7760
6020055082-2	6410 / 8210
6020055088-1	6860 / 8660 / 9110

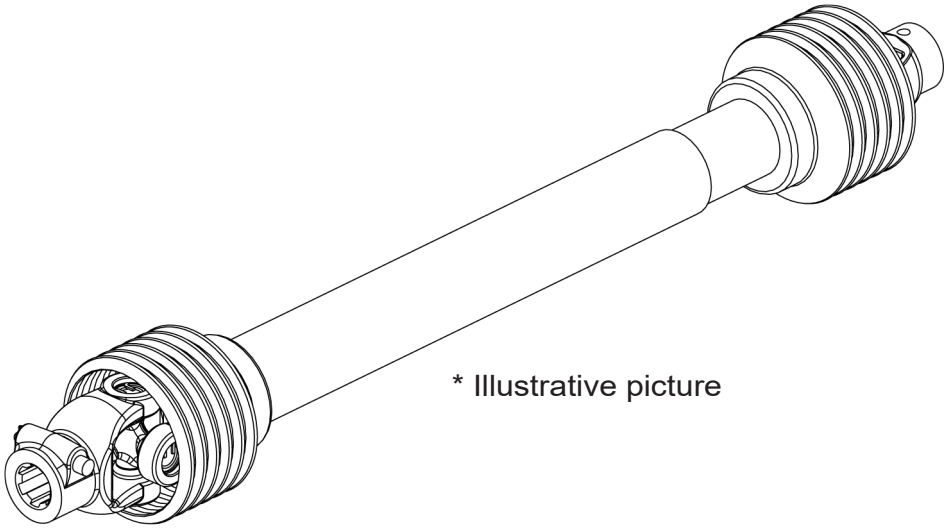

* Illustrative picture

Cardan With 1.1/4" Hexagonal and 1.3/8" Z6	
New Holland TC 55 - 57 / TC 59 / 8040 - 8055	
New Holland TC 59 (Double Upper Transmission)	
New Holland TC 5040/5070 + (5232011519-1 1 Unit)	
New Holland TC 5090 + (5232011466-7 1 Unit)	
New Holland CS 660 - CR 5080 / 6080 / 9060 (Double Lower Transmission)	
Case 2566 / 2688 - 2799 - 4130 - 5130 - 8010 - 8120	
John Deere 1450 / 1550 / 1175 (AC 1985) / 1185 + 6020317496-1 (Adapter)	
Code	**Main Frame Width**
6020050836-2	3260 / 3710 / 4160
6020050200-3	4650 / 5060
6020055051-2	5510 / 7310
6020055095-4	5960 / 7760
6020050830-3	6410 / 8210
6020055054-7	6860 / 8660 / 9110
With Clutch on Hex 1.1/4"	
6020050837-0	3260 / 3710 / 4160
6020050838-9	4650 / 5060
6020050843-5	5510 / 7310
6020055096-2	5960 / 7760
6020050831-1	6410 / 8210
6020055055-5	6860 / 8660 / 9110

Cardan With 1.1/4" Hexagonal and 1.3/8" Z21	
Massey 3640 (ac 1999) /5650	
Massey 32 / 34 / 38	
John Deere SLC 7700 - 8700 / JD 1470 / 1570 - STS 9470 / 9570 / 9650 / 9670 / 9750 / 9770	
Massey 9690 / 9790	
Valtra 4500	
Valtra 6500 / 7500	
Code	**Main Frame Width**
6020050820-6	3260 / 3710 / 4160
6020050821-4	4650 / 5060
6020050822-2	5510 / 7310
6020055089-0	5960 / 7760
6020050824-9	6410 / 8210
6020055048-2	6860 / 8660 / 9110
With Clutch on Hex 1.1/4"	
6020050842-7	3260 / 3710 / 4160
6020050823-0	4650 / 5060
6020050201-1	5510 / 7310
6020055090-3	5960 / 7760
6020050839-7	6410 / 8210
6020055049-0	6860 / 8660 / 9110

• Joints , Shafts and Gears

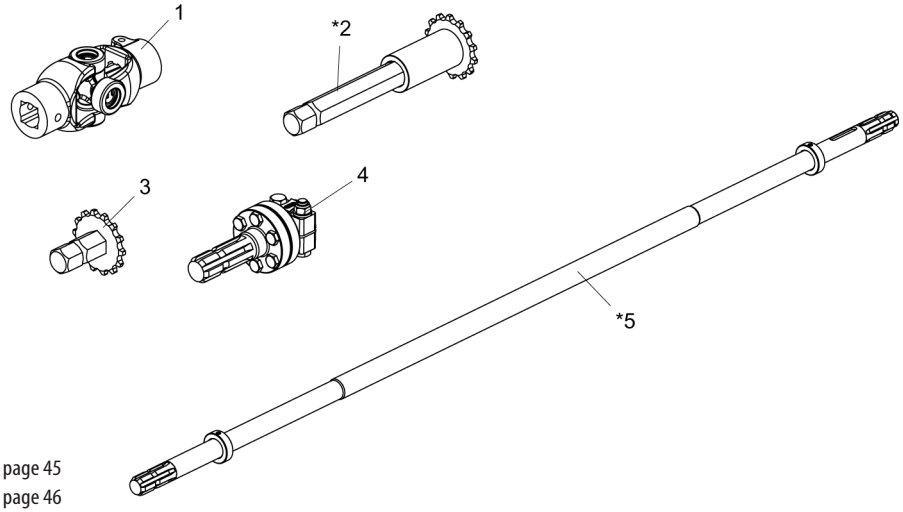

Joint for hexagonal 1.1/4" (Machines W/Flange)		
SLC 6100/6200/6300/6500 - JD 1165		
SLC 7100/7200/7300/7500 - (JD 1175 to 1984)		
NH 4040 / 5050		
Item	**Code**	**Product description**
1	6020190082-7	Agricultural Joint (Cc24936249)
*2	5232011376-8	Complete Shaft(Main Frame 4160mm)
*2	5232011302-4	Complete Shaft(Main Frame 3260mm) Nh-4040/5050
*2	5232011141-2	Complete Shaft(Main Frame 3710mm)
*2	5232011609-0	Complete Shaft(Main Frame 3710mm) Nh-4040/5050
3	5256010340-9	Complete Gear 14 Teeth(Asa 60)
4	6020317496-1	Adapted Ferrule Z6 1.3/8"X Cubo Z21 1.3/8"
*5	5232011519-1	Sprowd Shaft Z6(Harvester Nh Tc-5070) Complete
*5	5232011466-7	Sprowd Shaft Z6(Harvester Nh Tc-5090) Complete

* Item 2 - See page 45
* Item 5 - See page 46

• Complete Shaft

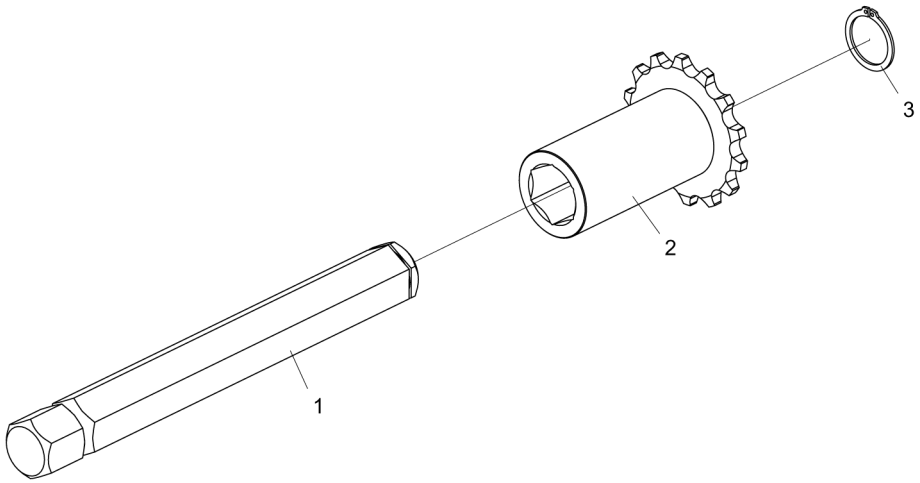

Item	Code	Product description	All	Main Frame 3710	Main Frame 4160	Main Frame 3260 (NH 4040 / 5050)	Main Frame 3710 (NH 4040 / 5050)
1	5232011140-4	Hexagonal Shaft 1.1/4" X 296,5mm		1			
1	5232011377-6	Hexagonal Shaft 1.1/4" X 521,50mm			1		
1	5232011303-2	Hexagonal Shaft 1.1/4" X 368mm				1	
1	5232011610-4	Hexagonal Shaft 1.1/4" X 593mm					1
2	5256010250-0	Complete Gear 14 Teeth(Asa 60)		1	1		
2	5256010311-5	Complete Gear 18 Teeth(Asa 60)				1	1
3	6020010263-3	Retaining Oring	1				

• Sprowd Shaft for Harvesters NH

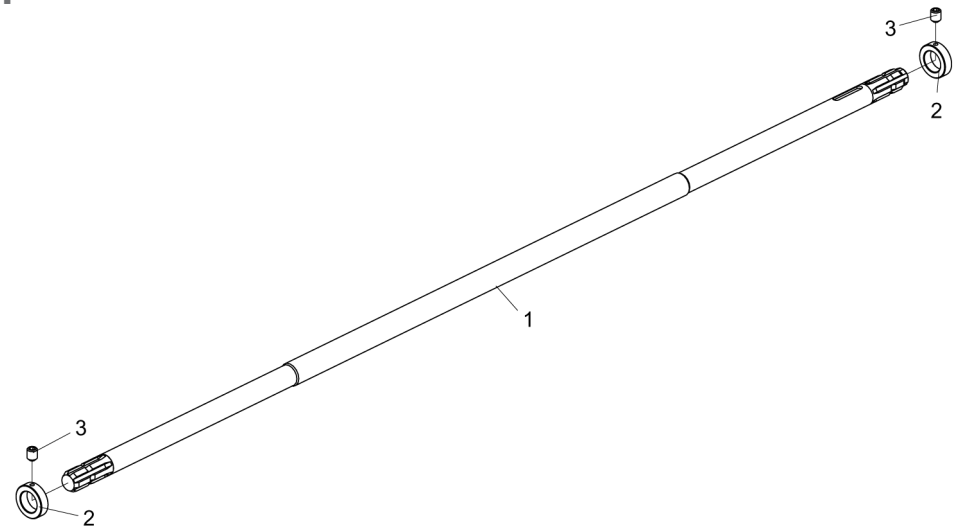

Item	Code	Product description	All	TC 5070	TC 5090
1	5232011520-5	Sprowd Shaft Ø1.3/8" Z6 X 1890mm		1	
1	5232011467-5	Sprowd Shaft Ø1.3/8" Z6 X 2060mm			1
2	5080011207-6	Bushing Of Ø35 X Ø55 X 16mm	2		
3	6020310065-8	Allen Bolt S/C M8 X 1,25 X 10mm Cl12.9 Rt (Phosphated)	2		

• Gearbox with limiter

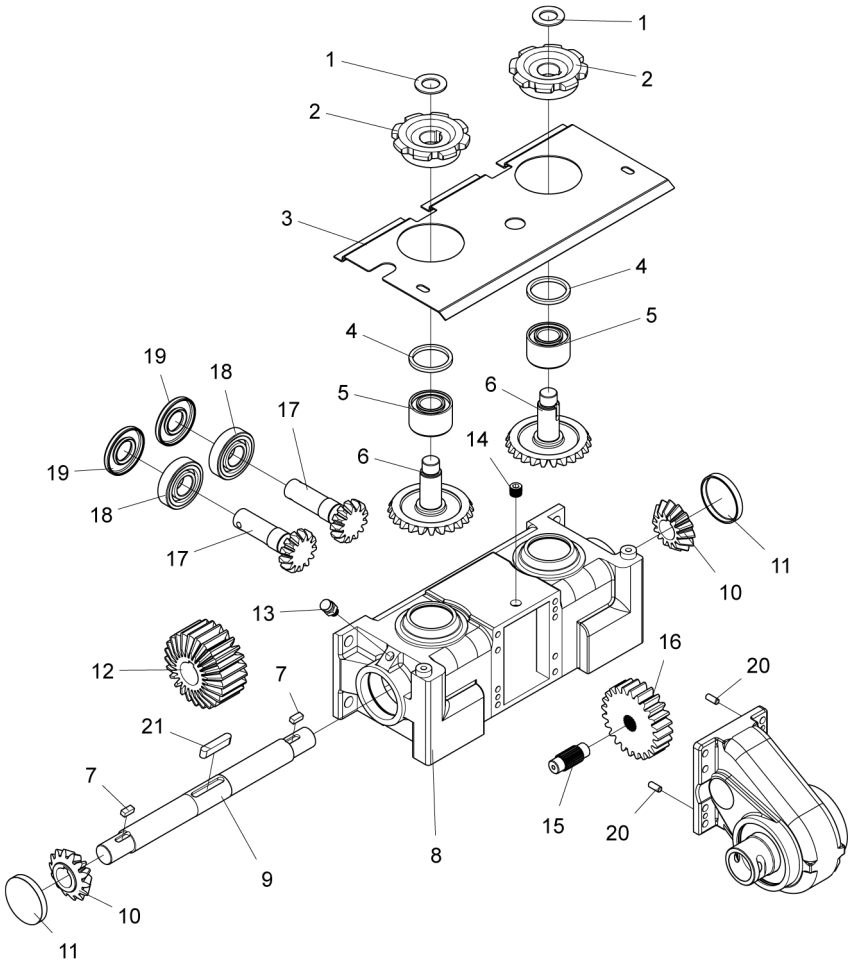

Item	Code	Product Description	All
1	6020011046-6	Flat Washer Ø44 X Ø25 X 2.65mm	2
2	6020096141-5	Chain Gear	2
3	5464010127-2	Superior Case Protection	1
4	6020110104-5	Ø60 x Ø50 x 5mm sealing felt	2
5	6020350882-7	Ina F45721 Bearing	2
6	6020061285-2	Splined Z=24 Pinion	1
7	6020055070-9	8 x 7 x 18mm keyway	2
8	6010602339-8	Gearbox	1
9	6020090602-3	Central Axis	1
10	6020317499-6	Z-14 Pinion Gear	2
11	6020390870-1	Vulcanized lid of Ø72 x 10mm	2
12	6020090601-5	Triple Gear Z-25	1
13	6020030681-6	Breather plug	1
14	6020030682-4	Din 906 Plug - 3/8" Gas	1
15	6020090606-6	Intermediate Shaft	1
16	6020090605-8	Z-24 Intermediate Spur Gear	1
17	6020317498-8	Z13 Pinion	2
18	6020350880-0	Special Bearing Ina F45959	2
19	6020350881-9	Ø30 x Ø72 x 6.5mm retainer	2
20	6020317500-3	Guide Pin	2
21	6020055069-5	8 x 10 x 55mm key	1

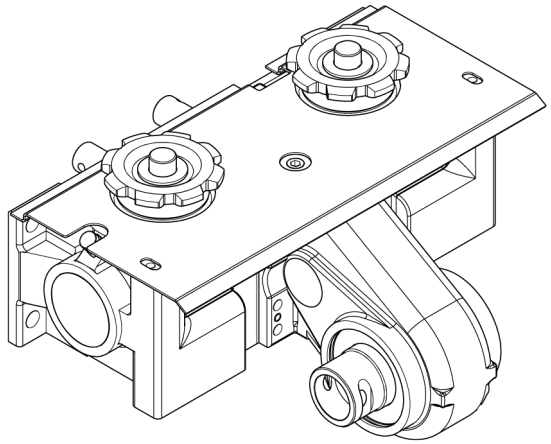

BALDAN

Avenida Baldan, 1500
Nova Matão
15.993-900
Matão/SP - Brasil
sac@baldan.com.br
export@baldan.com.br

+55 16 3221 6500
baldan.com.br