Parts
Catalog

SPE TOP LINE

Precision Row Crop Planter

BALDAN

Index

Main Frame Structural 4
Table Main Frame Structural 5
Structural Main Frame 3rd Deposit 6
Table Structural Main Frame 3rd Deposit 7
Transmission System 8
Table Transmission System ..... 9 - 10
Complete Lower Disarm Ratchet 11
Support of Line Transmission 12
Speed Box 13
Hydraulic Cylinder Ground Wheels 14
Complete Deposit SPE 4000 15
Table Complete Deposit SPE 4000 ..... 16 - 17
Complete Deposit SPE 4500 18
Fertisystem Items and Fertilizer Conduits 18
Complete Fertilizer Deposit SPE 4500 19
Table Complete Fertilizer Deposit SPE 4500 20
Seed Deposit System 3rd Deposit 21
Complete Wheel Support 22
Table Complete Wheel Support 23
Complete Auxiliary Wheel Support 24
Complete Line Marker 25
Table Complete Line Marker 26
Line Marker Hydraulic Cylinder 27
Hydraulic System without Line Marker 27
Complete Hitch Drawbar 28
Planting Lines 29
Line Larger/Smaller of Planting 30
Table Line Larger/Smaller of Planting ..... 31 - 32
Line with Double Disc Fertilizer for 3rd Deposit 33
Table Line with Double Disc Fertilizer for 3rd Deposit ..... 34 - 35
Line with Furrower for 3rd Deposit 36
Table Line with Furrower for 3rd Deposit 37
Line with Disarm/Reset Furrower for 3rd Deposit 38
Table Line with Disarm/Reset Furrower for 3rd Deposit 39
Line with Double Fertilizer Disc with Ribbed Cutting Disc for 3rd Deposit 40
Table Line with Double Fertilizer Disc with Ribbed Cutting Disc for 3rd Deposit ..... 41 - 42
Row Of Seed for 3rd Deposit 43
Table Row Of Seed for 3rd Deposit ..... 44 - 45
Seed Box 46
Complete Fertilizer Cart with Double Disc 47
Table Complete Fertilizer Cart with Double Disc 48
Complete Cart with Fuse Pin Groove 49
Complete Trolley with Disarming and Automatic Resetting Furrower 50
Table Complete Trolley with Disarming and Automatic Resetting Furrower 51
Row with Wheel Depth and “V” Wheel 52
Row of the Eccentric/Oscillating Depth Wheel and “V” Wheel 53
Table Row of the Eccentric/Oscillating Depth Wheel and “V” Wheel 54
Row of Wheel Flat/Concave/Convex Compactor (Optional) 55
Slap Wheel Groove 56
Lines with Double Fertilizer Disc (SPE) and with 18” Turbo Cutting Disc 57
Table Lines with Double Fertilizer Disc (SPE) and with 18” Turbo Cutting Disc ..... 58 - 59
Seed Discs - Optional 60
Table Seed Discs - Optional 61
PM400 electrical system - Optional 62
ETD Table - Optional 62
Stickers - Speed Box 63
Stickers - Line Marker 63
Stickers - Deposit SPE 4000 ..... 64 - 65
Stickers 3º deposit - Optional 66

BALDAN

• Main Frame Structural

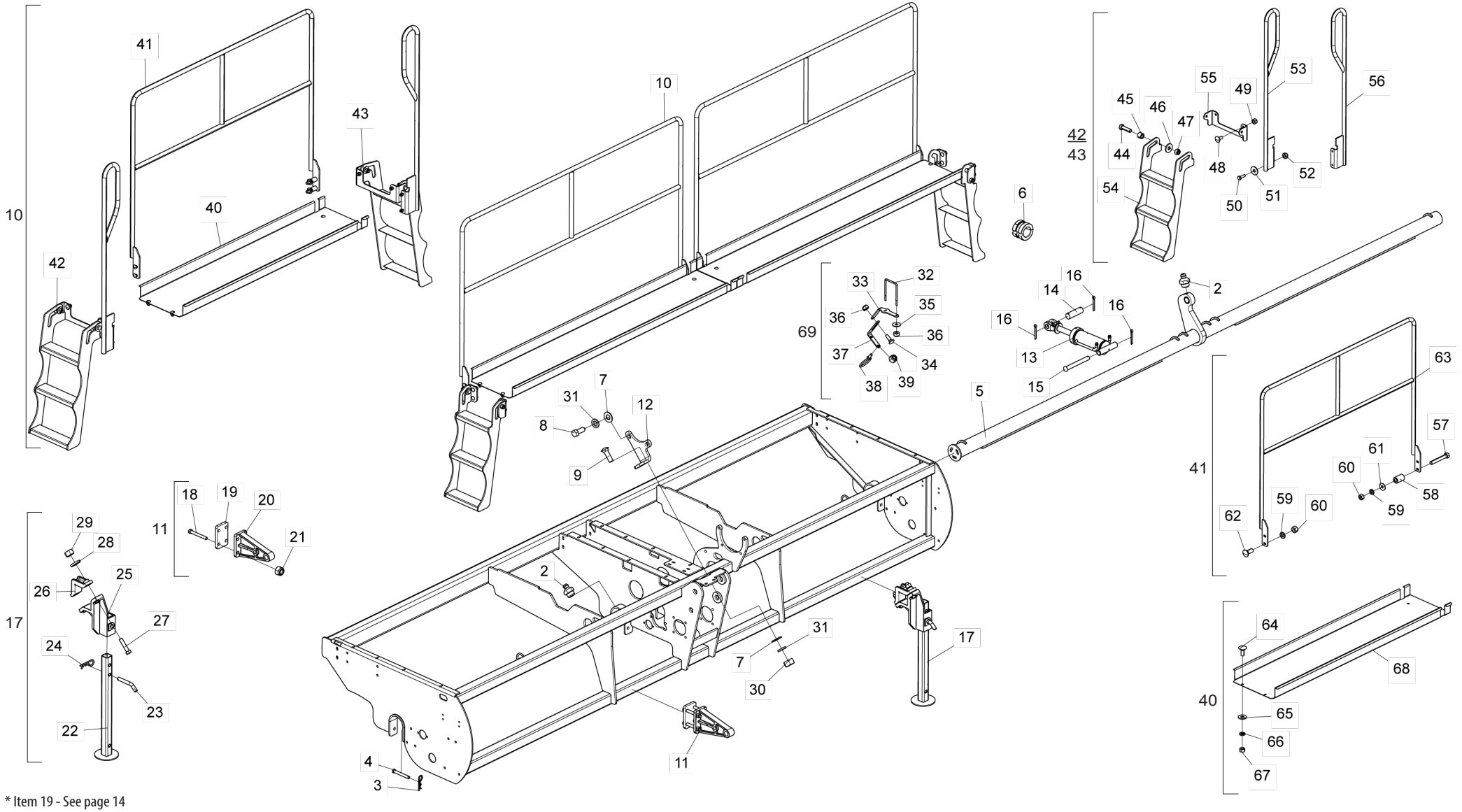

* Item 19 - See page 14

• Table Main Frame Structural

Item	Code	Product description	All	4000	4500
1	5404011079-0	Main Frame Spe-Top Line 4000		1	
1	5404011080-4	Main Frame Spe-Top Line 4500			1
2	6020130108-7	Grease Fitting 1/8"	9		
3	6020390294-0	Lock Nma - Type "R" Ø3,5 X 67mm(Special)	4		
4	5432010914-3	Round Head Pin Ø16 X 150mm	4		
5	5232012442-5	Complete Central Shaft 3.1/4"(4000)		1	
5	5232012441-7	Complete Central Shaft 3.1/4"(4500)			1
6	5348050009-8	Complete Limiter Of Ø42 X 49,5mm	1		
7	5024010162-6	Smooth Washer Ø13 X Ø26 X 2,00mm	4		
8	6020311047-5	Hexagonal Head Bolt 1/2" X 1" 12F W Gr5 Rt	2		
9	6020311175-7	French Head Bolt 1/2" X 1.5/8" 12F W Gr2 Rt	2		
10	5440010852-0	Complete Platform SPE Top Row 4000		1	
10	5440010849-0	Complete Platform SPE Top Row 4500			1
11	5252010175-6	Complete Drawbar Hitch	2		
12	5136013181-9	Speed Box Fixation Plate	1		
*13	6020055765-7	Right Hydraulic Cylinder "O.D" Ø1.5/8" X Ø4" X 170mm(Course) X 460mm(Closed)	1		
14	5432010032-4	Flat Pin Ø1.1/4" X 95mm	1		
15	5432010306-4	French Head Pin Ø30,53 X 268mm	1		
16	6020050116-3	Cotterpin 1/4" X 2"	3		
17	5530012331-6	Complete Support	2		
18	6020317476-7	Hexagonal Head Bolt M16 X 2,00 X 130mm Cl8.8 Rp	4		
19	5136013180-0	Hitch Fixation Plate	1		
20	6010602507-2	Drawbar Hitch	1		
21	6020310818-7	Hexagonal Nut M16 X 2,00 Ma Cl8 Ch.24mm H.13,00mm	4		
22	5530012411-8	Support Of 480mm	1		
23	5432020032-9	Pin "L" Ø3/4" X 94mm	1		
24	6020390308-4	Lock Nma - Type "R" Ø4,5 X 80mm	1		
25	6010601107-1	Back Fixation Support	1		
26	6010600770-8	Clamp	1		
27	6020311098-0	Hexagonal Head Bolt 3/4" X 3.1/2" 10F Unc1A Gr5 Rp	2		
28	6020010414-8	Pressure Washer 3/4" Media Industry	2		
29	6020310770-9	Hexagonal Nut 3/4" 10F Unc Gr5 Ch.1.7/32" Height 18,50mm	2		
30	6020310754-7	Hexagonal Nut 1/2" 12F W Gr5 Ch.7/8" Height 12,00mm	2		
31	6020010410-5	Pressure Washer 1/2" Media Industry	4		
32	5068010191-1	Clamp of 93 X 146 X M8	1		
33	5530018726-8	Upper Support of the Base of the Fertilizer Conductor	1		
34	6020317457-0	French Head Bolt M8 X 1,25 X 25mm Cl8.8 Rt	1		
35	6020010448-2	Smooth Washer M8 Ø8,40XØ24,00X2,00mm(DIN 9021)	2		
36	6020317449-0	Self-Locking Nut With Nylon Low M8 X 1,25 Ma Cl8 Ch.13mm H.8,00mm	3		
37	5530018725-0	Bottom Support of the Fertilizer Conductor Base	1		
38	5530010174-6	Support Of Hose	2		

Item	Code	Product description	All	4000	4500
39	6020310809-8	Self-Locking Nut With Nylon 1/2" 12F W Gr5 Ch.3/4" H.15,50mm	2		
40	5440010850-4	Platform SPE Top Row 4000		2	
40	5440010847-4	Platform SPE Top Row 4500			2
41	5196010221-9	Complete Handrail		2	
41	5196010218-9	Complete Handrail			2
42	5259010113-3	Complete Right Ladder Platform Without 3rd Deposit		1	
42	5259010104-4	Complete Right Ladder Platform Without 3rd Deposit			1
43	5259010114-1	Complete Left Ladder Platform Without 3rd Deposit		1	
43	5259010105-2	Complete Left Ladder Platform Without 3rd Deposit			1
44	6020312401-8	Hex Head Screw M16 X 2.00 X 55 Cl8.8 Rp	4		
45	5080012346-9	Bushing Ø16.20 X Ø26.50 X 20	4		
46	5024010298-3	Plain Washer Ø17 X Ø44 X 4.75	4		
47	6020317443-0	Self-locking Hex Nut with Nylon Low M16 X 2.00 Ma Cl8 Ch.24 Alt.16.00	4		
48	6020311202-8	French Head Screw M12 X 1.75 X 30 Cl8.8 Rt	4		
49	6020310847-0	Self-locking Hex Nut with Nylon Low M12 X 1.75 Ma Cl8 Ch.19 Alt.12.00	4		
50	6020310437-8	Hex Head Screw M10 X 1.50 X 35 Cl8.8 Rt	4		
51	6020010443-1	Flat Washer M10 Ø10.50 X Ø30.00 X 2.50 (Din 9021)	4		
52	6020317435-0	Self-locking Hex Nut with Nylon Low M10 X 1.50 Ma Cl8 Ch.17 Alt.10.00	4		
53	5196013398-0	Right Handrail For Machine Access		1	
53	5196013387-4	Right Handrail			1
54	5259010075-7	3 Step Ladder	2		
55	5530018834-5	Ladder Support	2		
56	5196013399-8	Left Handrail For Machine Access Left		1	
56	5196013386-6	Left Handrail			1
57	6020311061-0	Hexagonal Head Bolt 1/2" X 3.1/2" 12F W Gr5 Rp	2		
58	5080010865-6	Shaft Support Bushing	2		
59	6020010410-5	Pressure Washer 1/2" Media Industry	4		
60	6020310756-3	Hexagonal Nut 1/2" 12F W Gr5 Ch.3/4" Height 11,00mm	4		
61	5024010068-9	Smooth Washer Ø13,3 X Ø35,5 X 3,00mm	2		
62	6020311174-9	French Head Bolt 1/2" X 1.1/4" 12F W Gr2 Rt	2		
63	5196010220-0	Handrail Of SPE Top Row 4000		1	
63	5196010219-7	Complete Handrail			1
64	6020311160-9	French Head Bolt 3/8" X 1" 16F Unc1A Gr2 Rt	8		
65	5024010075-1	Smooth Washer Ø10,3 X Ø25 X 2,00mm	8		
66	6020010406-7	Pressure Washer 3/8" Media Industry	8		
67	6020310746-6	Hexagonal Nut 3/8" 16F Unc Gr5 Ch.9/16" Height 8,50mm	8		
68	5440010851-2	Platform Rear		2	
68	5440010848-2	Platform Rear			2
69	5530018724-1	Complete Fertilizer Conductor Base Support	1		

• Structural Main Frame 3rd Deposit

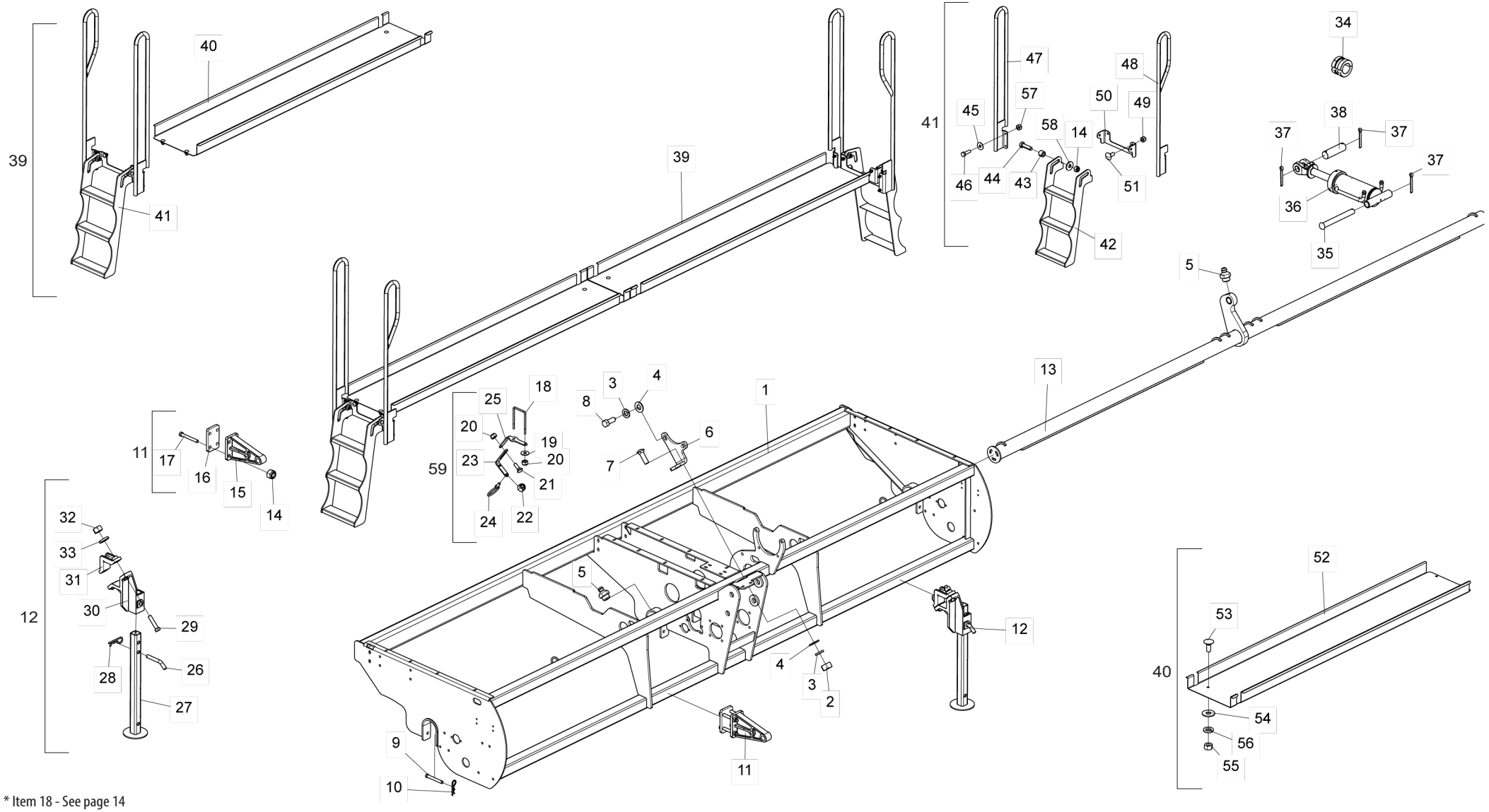

* Item 18 - See page 14

• Table Structural Main Frame 3rd Deposit

Item	Code	Product description	All	4000	4500
1	5404011248-3	Main Frame 4000 - 3rd Deposit		1	
1	5404011247-5	Main Frame 4500 - 3rd Deposit			1
2	6020310754-7	Hexagonal Nut 1/2" 12F W Gr5 Ch.7/8" Height 12,00mm	2		
3	6020010410-5	Pressure Washer 1/2" Media Industry	4		
4	5024010162-6	Smooth Washer Ø13 X Ø26 X 2,00mm	4		
5	6020130108-7	Grease Fitting 1/8"	9		
6	5136013181-9	Speed Box Fixation Plate	1		
7	6020311175-7	French Head Bolt 1/2" X 1.5/8" 12F W Gr2 Rt	2		
8	6020311047-5	Hexagonal Head Bolt 1/2" X 1" 12F W Gr5 Rt	2		
9	5432010914-3	Round Head Pin Ø16 X 150mm	4		
10	6020390294-0	Lock Nma - Type "R" Ø3,5 X 67mm(Special)	4		
11	5252010175-6	Complete Drawbar Hitch	2		
12	5530012331-6	Complete Support	2		
13	5232012728-9	Complete 3.1/4" Central Axle (4000) - 3rd Deposit		1	
13	5232012729-7	Complete 3.1/4" Central Axle (4500) - 3rd Deposit			1
14	6020317443-0	Self-Locking Nut With Nylon M16 X 2,00 Ma Cl8 Ch.24mm H.16,00mm	6		
15	6010602507-2	Drawbar Hitch	1		
16	5136013180-0	Hitch Fixation Plate	1		
17	6020317476-7	Hexagonal Head Bolt M16 X 2,00 X 130mm Cl8.8 Rp	4		
18	5068010191-1	Clamp of 93 X 146 X M8	1		
19	6020010448-2	Smooth Washer M8 Ø8,40XØ24,00X2,00mm(DIN 9021)	2		
20	6020317449-0	Self-Locking Nut With Nylon Low M8 X 1,25 Ma Cl8 Ch.13mm H.8,00mm	3		
21	6020317457-0	French Head Bolt M8 X 1,25 X 25mm Cl8.8 Rt	1		
22	6020310809-8	Self-Locking Nut With Nylon 1/2" 12F W Gr5 Ch.3/4" H.15,50mm	2		
23	5530018725-0	Bottom Support of the Fertilizer Conductor Base	1		
24	5530010174-6	Support Of Hose	2		
25	5530018726-8	Upper Support of the Base of the Fertilizer Conductor	1		
26	5432020032-9	Pin "L" Ø3/4" X 94mm	1		
27	5530012411-8	Support Of 480mm	1		
28	6020390308-4	Lock Nma - Type "R" Ø4,5 X 80mm	1		
29	6020311098-0	Hexagonal Head Bolt 3/4" X 3.1/2" 10F Unc1A Gr5 Rp	2		
30	6010601107-1	Back Fixation Support	1		
31	6010600770-8	Clamp	1		
32	6020310770-9	Hexagonal Nut 3/4" 10F Unc Gr5 Ch.1.7/32" Height 18,50mm	2		
33	6020010414-8	Pressure Washer 3/4" Media Industry	2		
34	5348050009-8	Complete Limiter Of Ø42 X 49,5mm	1		
35	5432010306-4	French Head Pin Ø30,53 X 268mm	1		
36	6020060123-0	Right Hydraulic Cylinder "D.A" Ø1.5/8" X Ø5" X 208.5mm (Travel) X 498mm(Closed)	1		
37	6020050116-3	Cotterpin 1/4" X 2"	3		
38	5432010032-4	Flat Pin Ø1.1/4" X 95mm	1		
39	5440011079-7	Complete Platform 4500 - 3rd Deposit			1
40	5440010850-4	Platform SPE Top Row 4000		2	
40	5440010847-4	Platform SPE Top Row 4500			2
41	5259010102-8	Left ladder complete to platform	1		
41	5259010101-0	Right staircase completes the platform	1		

Item	Code	Product description	All	4000	4500
42	5259010075-7	3 Step Ladder	1		
43	5080012346-9	Bushing Ø16.20 X Ø26.50 X 20	2		
44	6020312401-8	Hex Head Screw M16 X 2.00 X 55 Cl8.8 Rp	2		
45	6020010443-1	Flat Washer M10 Ø10.50 X Ø30.00 X 2.50 (Din 9021)	4		
46	6020310437-8	Hex Head Screw M10 X 1.50 X 35 Cl8.8 Rt	4		
47	5196010292-8	Left Side Handrail	1		
47	5196010291-0	Right Side Handrail	1		
48	5196013387-4	Right Handrail	1		
48	5196013386-6	Left Handrail	1		
49	6020310847-0	Self-locking Hex Nut with Nylon Low M12 X 1.75 Ma Cl8 Ch.19 Alt.12.00	2		
50	5530018834-5	Ladder Support	1		
51	6020311202-8	French Head Screw M12 X 1.75 X 30 Cl8.8 Rt	2		
52	5440010848-2	Platform Rear		1	
52	5440010851-2	Platform Rear			1
53	6020311160-9	French Head Bolt 3/8" X 1" 16F Unc1A Gr2 Rt	4		
54	5024010075-1	Smooth Washer Ø10,3 X Ø25 X 2,00mm	4		
55	6020310746-6	Hexagonal Nut 3/8" 16F Unc Gr5 Ch.9/16" Height 8,50mm	4		
56	6020010406-7	Pressure Washer 3/8" Media Industry	4		
57	6020317435-0	Self-locking Hex Nut with Nylon Low M10 X 1.50 Ma Cl8 Ch.17 Alt.10.00	4		
58	5024010298-3	Plain Washer Ø17 X Ø44 X 4.75	2		
59	5530018724-1	Complete Fertilizer Conductor Base Support	1		

BALDAN

• Transmission System

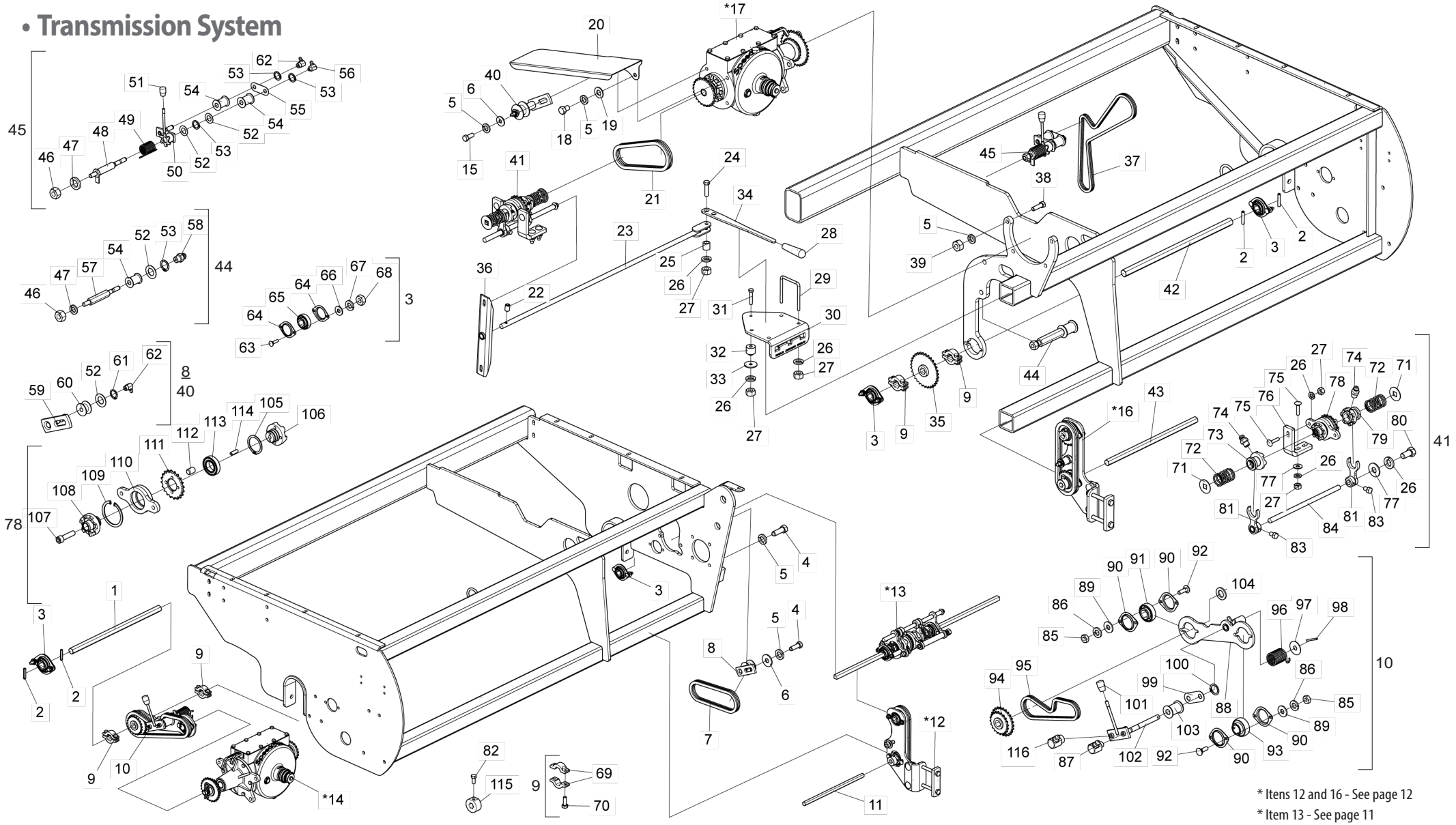

* Itens 12 and 16 - See page 12
* Item 13 - See page 11
* Itens 14 and 17 - See page 13

• Table Transmission System

Item	Code	Product description	All	4000	4500
1	5232010941-8	Hexagonal Shaft 7/8" X 1667mm		1	
1	5232011094-7	Hexagonal Shaft 7/8" X 2117mm			1
2	6020310488-2	Heavy Elastic Pin Ø6 X 32mm	4		
3	5368010599-1	Sleeve Bearing With Self Compensation Sq-014205 Krrb With Hexagonal Hole 7/8"	4		
4	6020312400-0	Hexagonal Head Bolt 1/2" X 1.1/2" 12F W Gr5 Rt	4		
5	6020010410-5	Pressure Washer 1/2" Media Industry	10		
6	5024010068-9	Smooth Washer Ø13,3 X Ø35,5 X 3,00mm	2		
7	6020050288-7	Chain (Asa 40) 48 Links + Reduction	1		
8	5268010246-5	Chain Stretcher	1		
9	5460010011-7	Complete Shaft Of Clamp	4		
10	5530012334-0	Complete Fixation Support	1		
11	5232010776-8	Hexagonal Shaft 5/8" X 1630mm		1	
11	5232011091-2	Hexagonal Shaft 5/8" X 2080mm			1
*12	5530012327-8	Transmision Support Of Right Side Row	1		
*13	5132010014-7	Ratchet With Complete Lower Disarm	1		
*14	5092010210-4	Complete Left Speed Box(Seed)	1		
15	6020310051-8	Hexagonal Head Bolt 1/2" X 1.1/4" 12F W Gr5 Rt	1		
*16	5530012328-6	Left Support Of Row Marker Transmission	1		
*17	5092010215-5	Complete Right Speed Box(Fertilizer)	1		
18	6020311046-7	Hexagonal Head Bolt 1/2" X 3/4" 12F W Gr2 Rt	1		
19	5024010162-6	Smooth Washer Ø13 X Ø26 X 2,00mm	1		
20	5464010196-5	Chain Protection		1	
20	5464010185-0	Chain Protection			1
21	6020050813-3	Chain (Asa 40) 51 Links + Amendment	1		
22	6020310096-8	Allen Bolt S/C 5/16" X 1/2" 18F Unc1A Cl12.9 Rt (Phosphated)	1		
23	5232011096-3	Shaft Of Disarm Handle With Plate	1		
24	6020311029-7	Hexagonal Head Bolt 3/8" X 1.1/2" 16F Unc1A Gr5 Rt	1		
25	5080010845-1	Bushing Of Ø10,3 X Ø5/8" X 16mm(Galvanised)	1		
26	6020010406-7	Pressure Washer 3/8" Media Industry	13		
27	6020310746-6	Hexagonal Nut 3/8" 16F Unc Gr5 Ch.9/16" Height 8,50mm	12		
28	6020050724-2	Rubber Cable	1		
29	5068010030-3	Clamp Of 83 X 104 X 3/8"	2		
30	5558010333-1	Disarm Lock	1		
31	6020310296-0	Hexagonal Head Bolt 3/8" X 2" 16F Unc1A Gr5 Rp	1		
32	5080010844-3	Spacer Bushing Of Handle Of Disarm	1		
33	5024010206-1	Smooth Washer Ø10,6 X Ø44 X 3,00mm	1		

Item	Code	Product description	All	4000	4500
34	5008010219-1	Handle	1		
35	5256010237-2	Complete Gear 20/31 Teeth	1		
36	5136013190-8	Trambulator Drive Plate W/Bushing	1		
37	6020051046-4	Chain (Asa 40) 131 Links + Amendment	1		
38	6020317427-9	Hexagonal Head Bolt 1/2" X 1.3/4" 12F W Gr5 Rt	4		
39	6020310754-7	Hexagonal Nut 1/2" 12F W Gr5 Ch.7/8" Height 12,00mm	4		
40	5268010806-4	Complete Chain Stretcher	1		
41	5132010017-1	Upper Disarm Ratchet	1		
42	5232010940-0	Hexagonal Shaft 7/8" X 1377mm		1	
42	5232011093-9	Hexagonal Shaft 7/8" X 1827mm			1
43	5232010939-6	Hexagonal Shaft 5/8" X 1550mm		1	
43	5232011092-0	Hexagonal Shaft 5/8" X 2000mm			1
44	5268010739-4	Complete Chain Stretcher	1		
45	5268010740-8	Complete Chain Stretcher	1		
46	6020310760-1	Hexagonal Nut 5/8" 11F Unc Gr5 Ch.1.1/16" Height 15,00mm	2		
47	6020010412-1	Pressure Washer 5/8" Media Industry	2		
48	5232011088-2	Shaft Of Disarm Handle With Bar	1		
49	6020250219-1	Torsion Helical Spring Ø38 X Ø46 X 67mm	1		
50	5268010738-6	Complete Chain Stretcher	1		
51	6020430203-3	Handle Pma 330 Thread 3/8" X 16 Fios	1		
52	5024010059-0	Smooth Washer Ø16,5 X Ø29 X 1,21mm	4		
53	6020010250-1	Retaining Oring	4		
54	5506010014-3	Roller Of Stretcher	3		
55	5136013187-8	Stretcher Frontal Plate	1		
56	6020130106-0	Grease Fitting 1/4"	1		
57	5232011097-1	Stretcher Shaft	1		
58	6020130100-1	Grease Fitting 1/4"	1		
59	5268010142-6	Spare Chain Stretcher		1	
59	5268010117-5	Spare Chain Stretcher			1
60	6020350849-5	Stretcher Pulley	1		
61	6020010252-8	Retaining Oring	1		
62	6020130112-5	Grease Fitting 1/8"	3		
63	6020312017-9	French Head Bolt 5/16" X 1.1/4" 18F Unc1A Gr2 Rp	2		
64	6020250412-7	Steel Plate Bearing 03.52 Mst	2		
65	6020350878-9	Bearing Sq-014205 Krrb Hexagonal Hole 7/8"	1		
66	5024010073-5	Smooth Washer Ø8,5 X Ø20 X 2,00mm	2		

• Table Transmission System

Item	Código	Descrição do Produto	Todos	4000	4500
67	6020010404-0	Pressure Washer 5/16" Media Industry	2		
68	6020310744-0	Hexagonal Nut 5/16" 18F Unc Gr5 Ch.1/2" Height 6,50mm	2		
69	5460010012-5	Shaft Clamp Hexagonal 7/8" With Hole Passante	1		
69	5460010013-3	Shaft Clamp Hexagonal 7/8" With Hole With Thread	1		
70	6020310016-0	Hexagonal Head Bolt 1/4" X 3/4" 20F Unc1A Gr5 Rt	2		
71	5024010498-6	Back Washer Of Spring With Square Hole	2		
72	6020250500-0	Ratchet Spring	2		
73	5256010247-0	External Left Gear	1		
74	6020130100-1	Grease Fitting 1/4"	2		
75	6020311161-7	French Head Bolt 3/8" X 1.3/4" 16F Unc1A Gr2 Rp	6		
76	5530012374-0	Support Of Bearing Of Gear	2		
77	5024010075-1	Smooth Washer Ø10,3 X Ø25 X 2,00mm	5		
78	5368010623-8	Upper Complete Finishing Bearing (Fertilizer)	1		
79	5256010245-3	External Right Gear	1		
80	6020312201-5	Hexagonal Head Bolt 3/8" X 3/4" 16F Unc1A Gr5 Rt	1		
81	5304010005-5	Trambulator Right Fork	2		
82	6020312020-9	Hexagonal Head Bolt 5/16" X 3/4" 18F Unc1A Gr5 Rt	1		
83	6020311020-3	Hexagonal Head Bolt 5/16" X 1/2" 18F Unc1A Gr2 Rt	2		
84	5232011119-6	Disarm Shaft	1		
85	6020310744-0	Hexagonal Nut 5/16" 18F Unc Gr5 Ch.1/2" Height 6,50mm	4		
86	6020010404-0	Pressure Washer 5/16" Media Industry	4		
87	6020130106-0	Grease Fitting 1/4"	1		
88	5530012335-9	Fixation Support Of Bearing	1		
89	5024010073-5	Smooth Washer Ø8,5 X Ø20 X 2,00mm	4		
90	6020250412-7	Steel Plate Bearing 03.52 Mst	4		
91	6020350878-9	Bearing Sq-014205 Krrb Hexagonal Hole 7/8"	1		
92	6020310161-1	French Head Bolt 5/16" X 1" 18F Unc Gr2 Rt	4		
93	6020350081-8	Bearing Gy-1100 Krrb	1		
94	5256010238-0	Complete Gear 20/25 Teeth	1		
95	6020055460-7	Chain (Asa 40) 67 Links + Amendment	1		
96	6020250218-3	Torsion Helical Spring Ø38 X Ø46 X 67mm	1		
97	5024010495-1	Back Washer Of Spring	1		
98	6020311251-6	Heavy Elastic Pin Ø5 X 55mm	1		
99	5136013187-8	Stretcher Frontal Plate	1		
100	6020010252-8	Retaining Oring	2		
101	6020430203-3	Handle Pma 330 Thread 3/8" X 16 Fios	1		

Item	Código	Descrição do Produto	Todos	4000	4500
102	5268010737-8	Spare Chain Stretcher	1		
103	5506010014-3	Roller Of Stretcher	2		
104	5024010039-5	Smooth Washer Ø26,2 X Ø44 X 4,75mm	1		
105	6020010266-8	Retaining Oring	1		
106	5256010246-1	Internal Left Gear	1		
107	6020310195-6	Allen Bolt C/C 1/2" X 2" 12F W Cl12.9 Rt (Phosphated)	1		
108	5256010244-5	Internal Right Gear	1		
109	6020010289-7	Retaining Ring I-55	1		
110	5368020021-8	Gear Bearing	1		
111	5256010243-7	Gear 20 Teeth Of Finishing System	1		
112	5432010308-0	Flat Pin Ø5/16" X 11,5mm	4		
113	6020350006-0	Bearing 6006 2Rs Ddu	1		
114	5432010307-2	Flat Pin Ø6,35 X 12,5mm	2		
115	6020030079-6	Traction Bushing	1		
116	6020130112-5	Grease Fitting 1/8" 90 Graus Bsp-28F	1		

• Complete Lower Disarm Ratchet

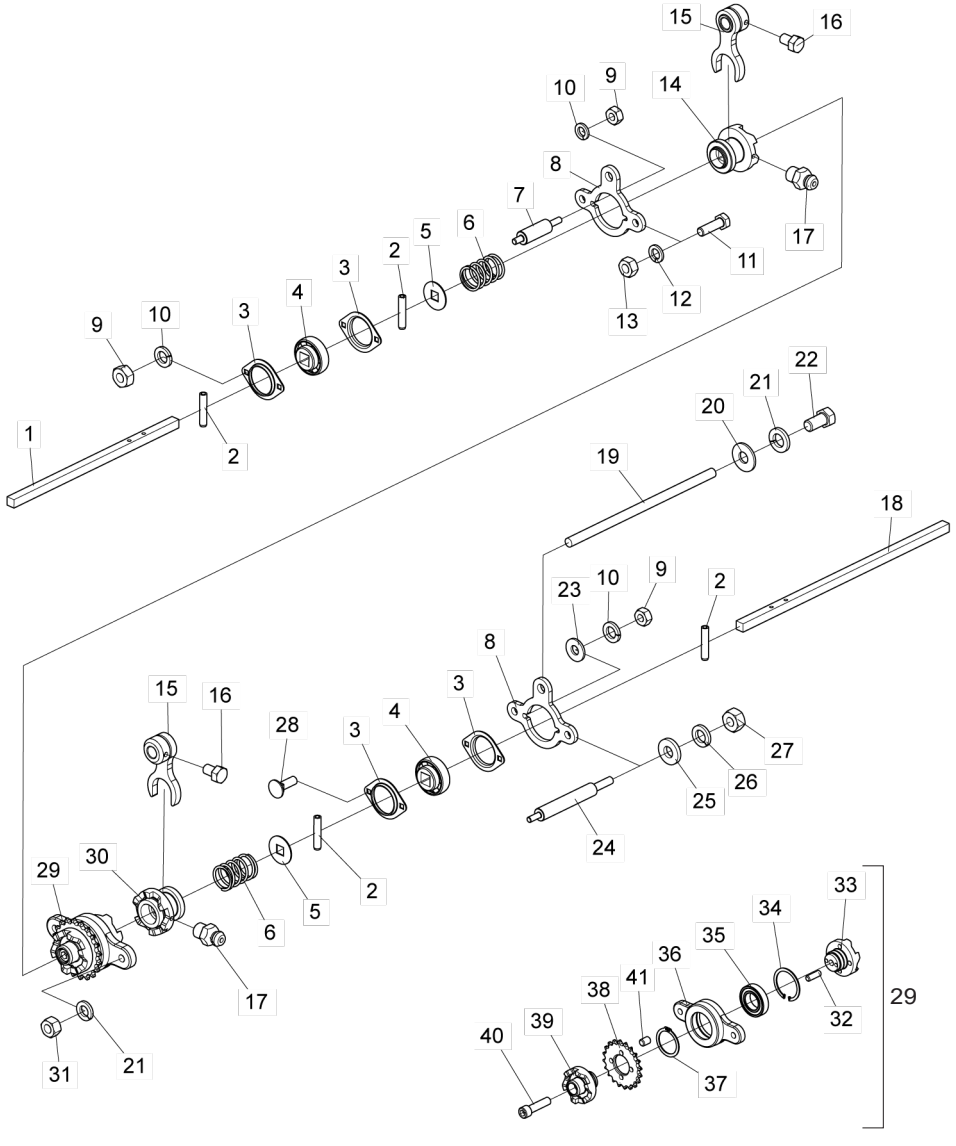

Item	Code	Product description	All
1	5232011101-3	Front Fertilizer Shaft 400mm	1
2	6020310471-8	Heavy Elastic Pin Ø6 X 30mm	4
3	6020250412-7	Steel Plate Bearing 03.52 Mst	4
4	6020250117-9	Bearing Assy F-110934.1	2
5	5024010498-6	Back Washer Of Spring With Square Hole	2
6	6020250500-0	Ratchet Spring	2
7	5232012025-0	Fixation Shaft of Disarm (50mm)	2
8	5530012341-3	Trambulador Support Of Lower Disarm	2
9	6020310454-8	Hexagonal Nut M8 X 1,25 Ma Cl8 Ch.13mm H.6,50mm	6
10	6020010004-5	Pressure Washer M8 Media	6
11	6020310152-2	Hex Head Screw M12 X 1.75 X 40mm CL8.8 RT	2
12	6020010395-8	Pressure Washer M12 Media	2
13	6020310820-9	Hexagonal Nut M12 X 1,75 Ma Cl8 Ch.19mm H.10,00mm	2
14	5256010247-0	External Left Gear	1
15	5304010005-5	Trambulator Right Fork	2
16	6020311020-3	Hexagonal Head Bolt 5/16" X 1/2" 18F Unc1A Gr2 Rt	2
17	6020130100-1	Grease Fitting 1/4"	2
18	5232011102-1	Front Fertilizer Shaft 500mm	1
19	5232011119-6	Disarm Shaft	1
20	5024010075-1	Smooth Washer Ø10,3 X Ø25 X 2,00mm	1
21	6020010406-7	Pressure Washer 3/8" Media Industry	3
22	6020312201-5	Hexagonal Head Bolt 3/8" X 3/4" 16F Unc1A Gr5 Rt	1
23	5024010073-5	Smooth Washer Ø8,5 X Ø20 X 2,00mm	2
24	5232011100-5	Fixation Shaft 111,4mm	2
25	5024010499-4	Smooth Washer Ø13,5 X Ø30 X 4,80mm	2
26	6020010410-5	Pressure Washer 1/2" Media Industry	2
27	6020310754-7	Hexagonal Nut 1/2" 12F W Gr5 Ch.7/8" Height 12,00mm	2
28	6020317457-0	French Head Bolt M8 X 1,25 X 25mm Cl8.8 Rt	2
29	5368010600-9	Complete Finishing Bearing	1
30	5256010245-3	External Right Gear	1
31	6020310746-6	Hexagonal Nut 3/8" 16F Unc Gr5 Ch.9/16" Height 8,50mm	2
32	5432010307-2	Flat Pin Ø6,35 X 12,5mm	2
33	5256010246-1	Internal Left Gear	1
34	6020010289-7	Retaining Ring I-55	1
35	6020350006-0	Bearing 6006 2Rs Ddu	1
36	5368020021-8	Gear Bearing	1
37	6020010266-8	Retaining Oring	1
38	5256010243-7	Gear 20 Teeth Of Finishing System	1
39	5256010244-5	Internal Right Gear	1
40	6020310195-6	Allen Bolt C/C 1/2" X 2" 12F W Cl12.9 Rt (Phosphated)	1
41	5432010308-0	Flat Pin Ø5/16" X 11,5mm	4

BALDAN

• Support of Line Transmission

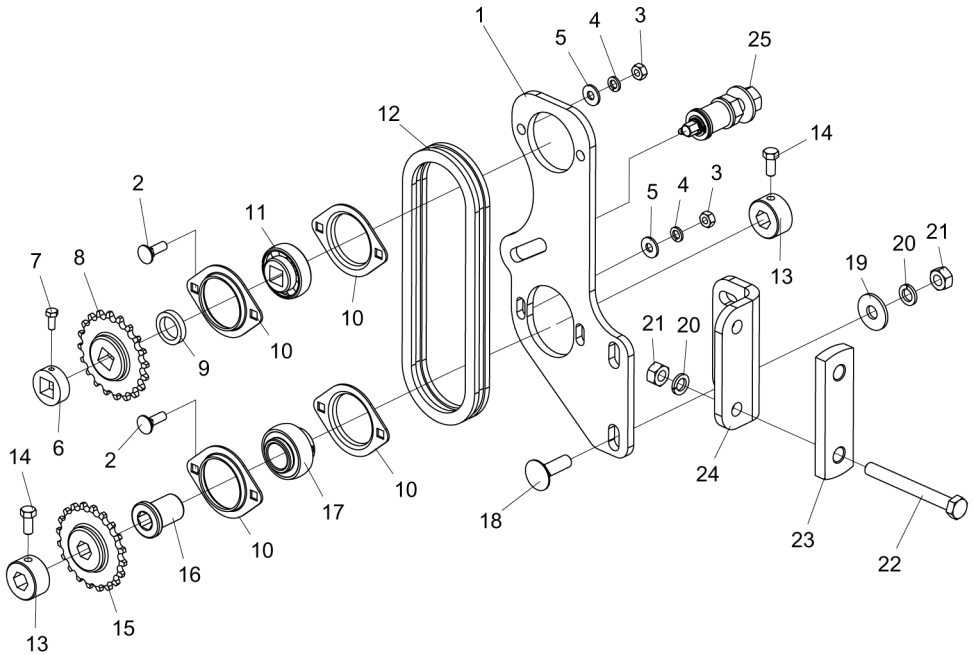

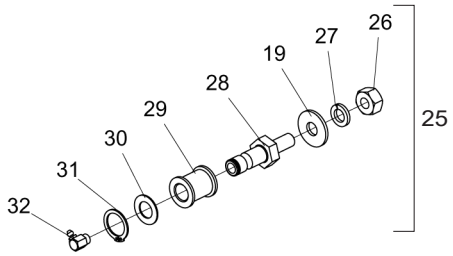

Item	Code	Product description	All
1	5530012329-4	Fixation Support Of Bearing	1
2	6020317457-0	French Head Bolt M8 X 1,25 X 25mm Cl8.8 Rt	4
3	6020310454-8	Hexagonal Nut M8 X 1,25 Ma Cl8 Ch.13mm H.6,50mm	4
4	6020010004-5	Pressure Washer M8 Media	4
5	5024010073-5	Smooth Washer Ø8,5 X Ø20 X 2,00mm	4
6	5080011680-2	Bushing W/Hole Metric Sq.16,7 For Gear Lock	1
7	6020310291-0	Hexagonal Head Bolt M6 X 1,00 X 15mm Cl8.8 Rt	1
8	5256010234-8	Gear 20 Teeth For Shaft 5/8"	1
9	5024010308-4	Smooth Washer Ø23 X Ø32 X 6,30mm	1
10	6020250412-7	Steel Plate Bearing 03.52 Mst	4
11	6020250117-9	Bearing Assy F-110934.1	1
12	6020050284-4	Chain (Asa 40) 49 Links + Amendment	1
13	5080010655-6	Bushing Of Ø1.1/2" X 20mm W/Hexagonal Hole For Shaft 5/8"	2
14	6020312020-9	Hexagonal Head Bolt 5/16" X 3/4" 18F Unc1A Gr5 Rt	2
15	5256010060-4	Gear 20 Teeth For Shaft 5/8"	1
16	5080010204-6	Bushing Of Ø1.3/8" W/Hexagonal Hole For Shaft 5/8"	1
17	6020350081-8	Bearing Gy-1100 Krrb	1
18	6020317537-2	French Head Bolt M12 X 1,75 X 40mm Cl8.8 Rp	2
19	5024010068-9	Smooth Washer Ø13,3 X Ø35,5 X 3,00mm	3
20	6020010395-8	Pressure Washer M12 Media	4
21	6020310820-9	Hexagonal Nut M12 X 1,75 Ma Cl8 Ch.19mm H.10,00mm	4
22	6020310979-5	Hexagonal Head Bolt M12 X 1,75 X 110mm Cl8.8 Rp	2
23	5136020318-6	Support Plate	1
24	5530012410-0	Support of Shaft Bearings	1
25	5268010736-0	Complete Chain Stretcher	1
26	6020310754-7	Hexagonal Nut 1/2" 12F W Gr5 Ch.7/8" Height 12,00mm	1
27	6020010410-5	Pressure Washer 1/2" Media Industry	1
28	5232011087-4	Stretcher Shaft	1
29	5506010033-0	Roller Of Stretcher	1
30	5024010059-0	Smooth Washer Ø16,5 X Ø29 X 1,21mm	1
31	6020010252-8	Retaining Oring	1
32	6020130112-5	Grease Fitting 1/8"	1

• Speed Box

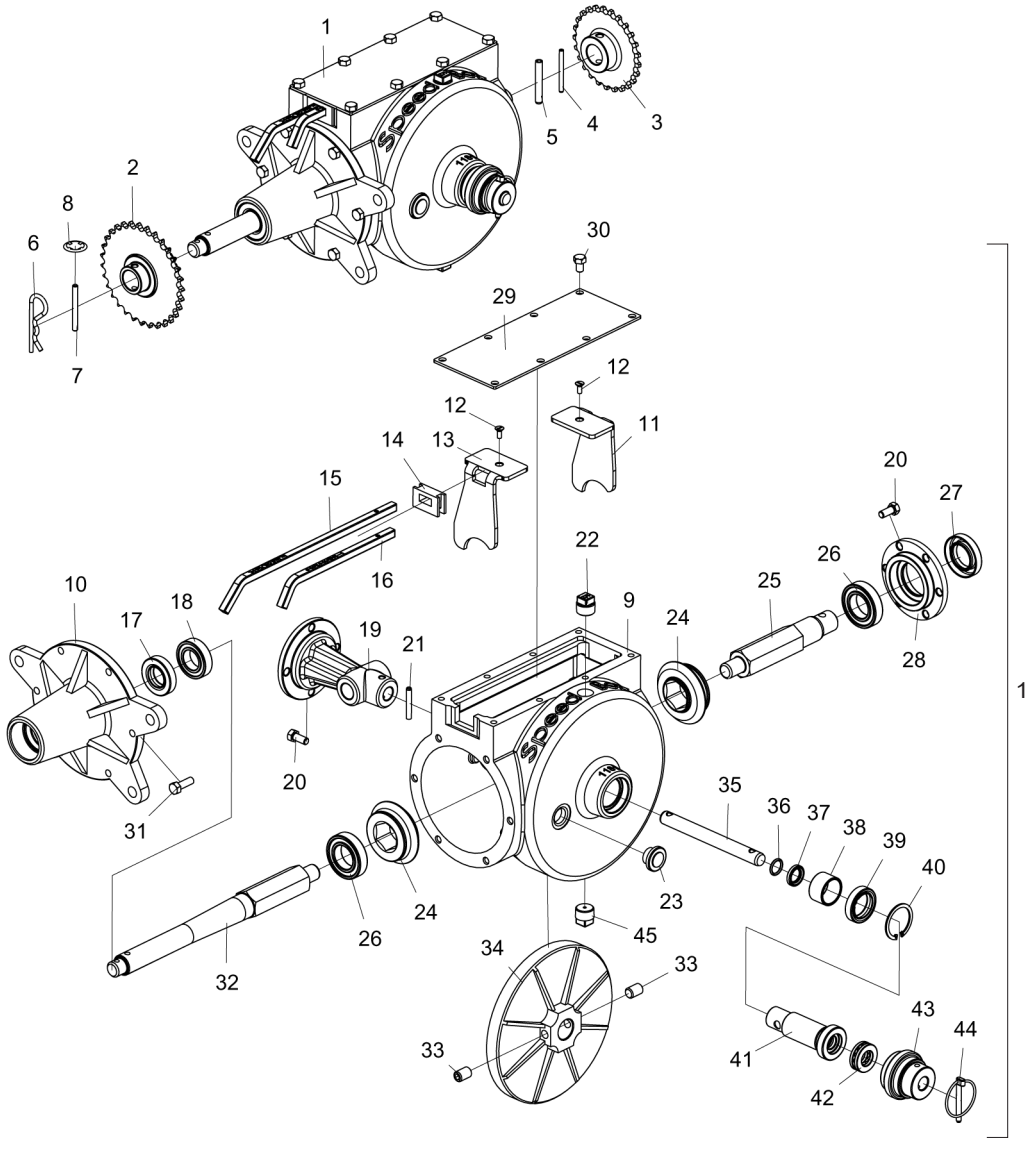

Item	Code	Product description	All	Right Fertilizer	Left Seed
1	5092010205-8	Complete Right Speed Box		1	
1	5092010054-3	Complete Left Speed Box			1
2	5256010054-0	Complete Gear 20/31 Teeth		1	
2	5256010058-2	Complete Gear 20/25 Teeth			1
3	5256010053-1	Gear 25 Teeth		1	
3	5256010052-3	Gear 20 Teeth			1
4	6020311251-6	Heavy Elastic Pin Ø5 X 55mm	1		
5	6020311252-4	Heavy Elastic Pin Ø8 X 55mm	1		
6	6020390308-4	Lock Nma - Type "R" Ø4,5 X 80mm	1		
7	5432010040-5	Fuse Pin Ø6 X 60mm	1		
8	6020010326-5	Retaining Oring	2		
9	5112010011-8	Right Gear Box Housing		1	
9	5112010012-6	Left Gear Box Housing			1
10	5538010093-1	Cover Of Reduction Box	1		
11	5554010017-8	Right Support	1		
12	6020312502-2	Bolt Nº10 X 1/2" 24F Unc2A Gr2 Rt	2		
13	5554010015-1	Left Support	1		
14	6020030015-0	Protection Speed Box Protection With Hole	1		
15	5260040006-1	Alphabetical Regulating Shaft De 299mm	1		
16	5260040007-0	Numerical Regulating Shaft De 200mm	1		
17	6020350204-7	Retainer Ø25,00 X Ø47,00 X 10,00mm	1		
18	6020350075-3	Bearing 6005 2Rs	1		
19	5538010085-0	Rear Cover	1		
20	6020312020-9	Hexagonal Head Bolt 5/16" X 3/4" 18F Unc1A Gr5 Rt	10		
21	6020310506-4	Heavy Elastic Pin Ø6 X 40mm	1		
22	5081010013-0	Plug R.1/2 X 14 Npt W/Hole 3,00mm	1		
23	6020430323-4	Oil Sight Plastic 1/2"	1		
24	6020010999-9	Gear 21 Teeth	2		
25	5232120183-0	Small Shaft Of Gear Box	1		
26	6020350006-0	Bearing 6006 2Rs Ddu	2		
27	6020350245-4	Retainer Ø30,00 X Ø52,00 X 10,00mm	1		
28	5538010086-9	Front Cover Of Reduction Box	1		
29	5538060003-9	Cover Of 100 X 250 X 3,00mm	1		
30	6020311020-3	Hexagonal Head Bolt 5/16" X 1/2" 18F Unc1A Gr2 Rt	8		
31	6020310038-0	Hexagonal Head Bolt 5/16" X 1" 18F Unc1A Gr5 Rt	6		
32	5232010695-8	Small Shaft Of Gear Box		1	
32	5232120184-9	Small Shaft Of Gear Box			1
33	6020317426-0	Allen Bolt S/C 1/2" X 3/4" 12F W Cl12.9 Rt (Phosphated)	2		
34	5256060005-4	Crown Of Reduction Box	1		
35	5232020209-4	Shaft Ø5/8" X 157mm	1		
36	6020010022-3	O´Ring 2-114 N3006-90Nbr (15,54)	1		
37	6020350274-8	Retainer Ø15,90 X Ø25,40 X 4,50mm	1		
38	5080020804-9	Bushing Of Ø30 X Ø35 X 21mm	1		
39	6020350275-6	Retainer Ø30,00 X Ø43,00 X 9,50mm	1		
40	6020010305-2	Retaining Ring I-42	1		
41	5080010232-1	Bushing Of Ø25 X 100mm	1		
42	6020350086-9	Bearing Skf 51203	1		
43	5468010024-4	Shaft Handle	1		
44	6020390301-7	Lock Ø5,75 X 50mm	1		
45	5081010012-2	Plug R.1/2 X 14 Npt	1		

• Hydraulic Cylinder Ground Wheels

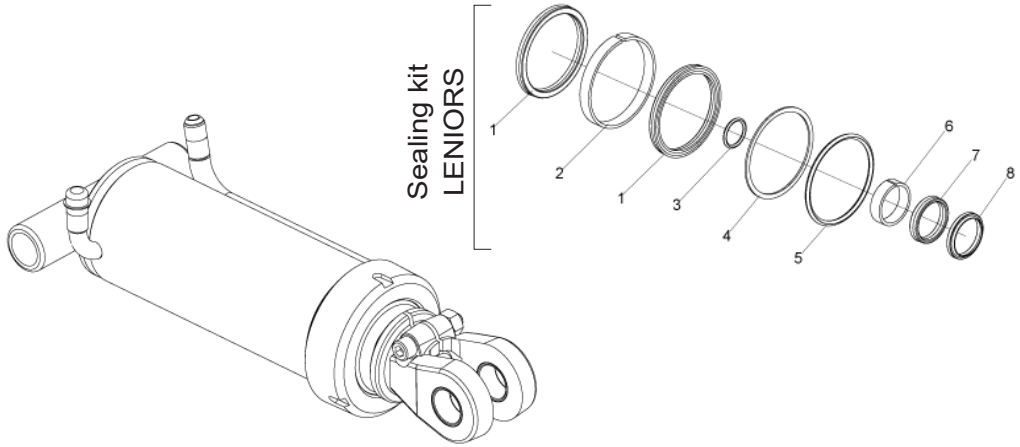

Item	Code	Product description	All
		Sealing kit LENIORS	
1	J007149	Gasket Std 3120-3375 (Ø3.3/8" x Ø 4" x 5/16")	2
2		Guide Ring W2-4000-500 (Ø4" x 1/2")	1
3		O´Ring 2-126 (Ø26,57 x Ø3,53mm)	1
4		Parback 8-342	1
5		Anel O´Ring 2-342 (Ø91,44 x Ø5,33mm)	1
6		Guide Ring 6W8-1875-475 (Ø41,22 x 47,62 x 1/2")	1
7		Gasket B 1870-1625-375B (Ø1.5/8" x Ø2" x 3/8")	1
8		Cleaner D-1625	1
-	6020190200-5	Repair Kit Leniors J007149	1

For the purpose of replacing parts, please check the cylinder liner for - The Baldan code, the manufacturer's code and name and the date of manufacture.

• Complete Deposit SPE 4000

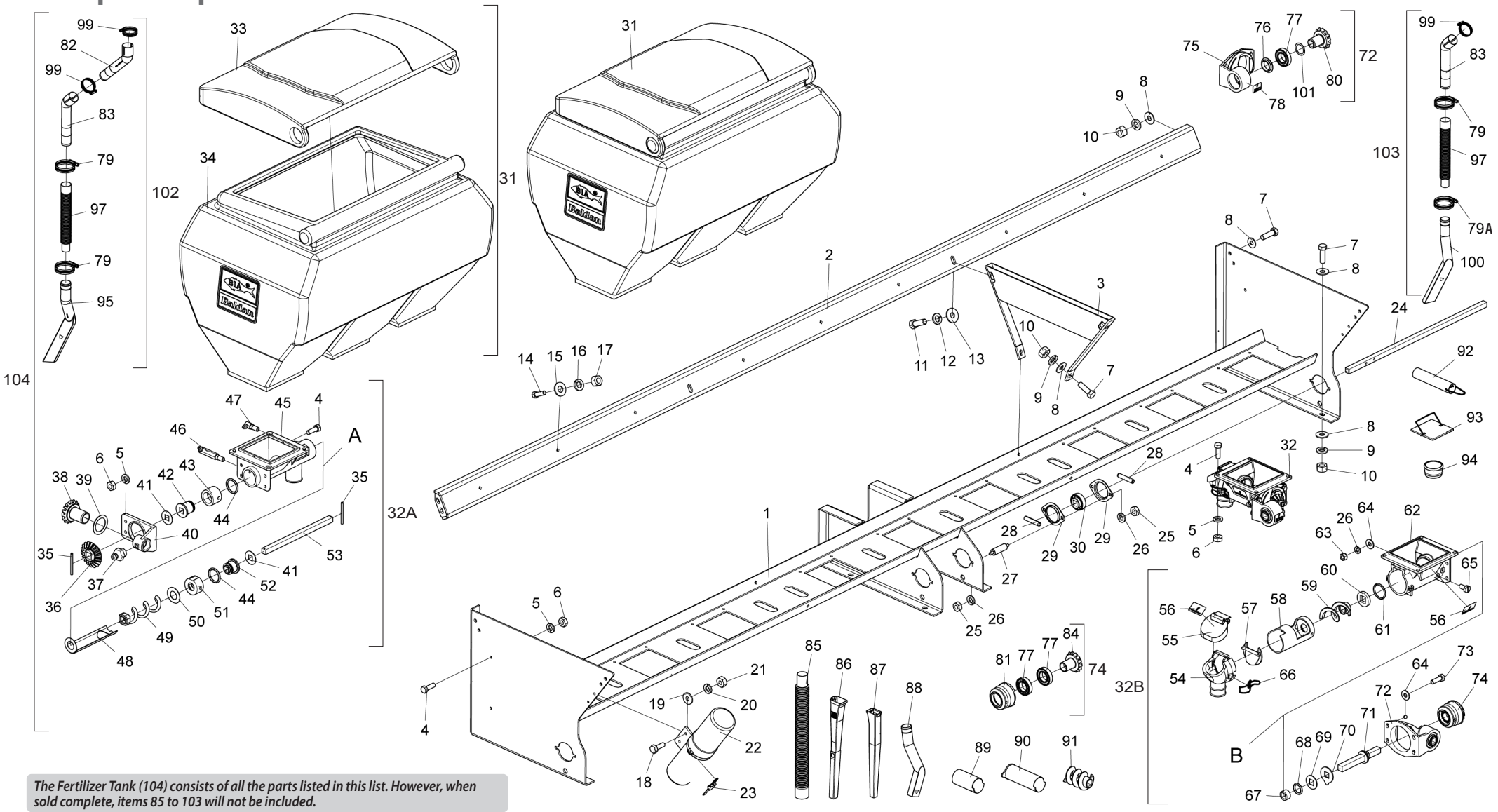

The Fertilizer Tank (104) consists of all the parts listed in this list. However, when sold complete, items 85 to 103 will not be included.

BALDAN

• Table Complete Deposit SPE 4000

Item	Code	Product Description	All	Transversal	Fertisystem
1	5530012378-2	Plastic Box Support Spe Top Line 4000	1		
2	5530012089-9	Plastic Box Support Spe Top Line 4000	2		
3	5530012373-1	Plastic Box Support Spe Top Line	2		
4	6020310883-7	Hex Head Screw Stainless Steel 5/16" X 1" 18F Unc2A Rt	40		
5	6020015922-8	Stainless Steel Pressure Washer M8 Medium	48		
6	6020310767-9	Brass Hex Nut 5/16" 18F Unc Ch.1/2" Height.6,50mm	48		
7	6020310026-7	Hex Bolt 3/8" X 1.1/4" 16F Unc1A Gr5 Rt(Bichromated)	20		
8	5024010075-1	Flat washer of Ø10.3 x Ø25 x 2.00mm	39		
9	6020010394-0	M10 Medium Pressure Washer(Bichromated)	20		
10	6020310746-6	Hex Nut 3/8" 16F Unc Gr5 Ch.9/16" Height.8.50mm (Bichromated)	20		
11	6020312001-2	Hex Head Screw 1/2" X 1.1/2" 12F W Gr5 Rt(Bichromated)	4		
12	6020010410-5	1/2" Medium Industrial Pressure Washer(Bichromated)	4		
13	5024010068-9	Flat washer of Ø13.3 x Ø35.5 x 3.00mm	4		
14	6020317389-2	Hex Head Screw Stainless Steel 3/8" X 1.1/4" 16F Unc2A Rt	18		
15	6020010425-3	Flat Stainless Steel Washer Ø10X Ø21X 2,00mm	18		
16	6020015921-0	Stainless Steel Pressure Washer M10 Medium	18		
17	6020310768-7	Brass Hex Nut 3/8" 16F Unc Ch.9/16" Height.8.50mm	18		
18	6020311002-5	Hex Head Screw 1/4" X 3/4" 20F Unc1A Gr2 Rt(Bichromated)	2		
19	5024010161-8	Flat washer Ø7 X Ø18 X 2,00mm	2		
20	6020010122-0	M6 Medium Pressure Washer(Bichromated)	2		
21	6020310766-0	Brass Hex Nut 1/4" 20F Unc Ch.7/16" Height.5.50mm	2		
22	6020050642-4	Instruction manual container	1		
23	6020230100-5	Instruction manual container seal	1		
24	5232011130-7	Fertilizer Front Axle	2		
25	6020310744-0	Hex Nut 5/16" 18F Unc Gr5 Ch.1/2" Height.6.50mm (Bichromated)	8		
26	6020010404-0	Pressure Washer 5/16" Medium Industrial (Bichromated)	12		
27	5232011118-8	Clamping shaft	4		
28	6020310471-8	Heavy Elastic Pin Ø6 x 30mm (Seeger Reno 701.161)	4		
29	6020250412-7	Drawn Steel Plate Bearing 03.52 Mst	4		
30	6020250117-9	Self Aligning Bearing F-110934.1	2		
31	6020055061-0	Plastic Box For Fertilizer 290 Liters W/lid (Red Ral-3020)	2		
31	6020058785-8	Plastic Box For Fertilizer 290 Liters W/lid (Red Ral-3020) Central Mouth Closed Spe4000	1		
32-A	5150010084-6	Left Fertilizer Conductor W/grease Nipple And C/Step 50.8mm Complete - Transversal		8	
32-B	6020051126-6	Fertisystem Auto-Lub Ap/2D Ng Me(Fertisystem 11110000) Dosing Set			8

Item	Code	Product Description	All	Transversal	Fertisystem
33	6020390867-1	Lid For Plastic Fertilizer Box 290 Liters (Black)	3		
34	6020055044-0	Plastic Box 290 Liters W/O Lid (Red Ral-3020)	2		
34	6020058784-0	Plastic Box For Fertilizer 290 Liters W/O Lid (Red Ral-3020) Central Mouth Closed Spe4000	1		
35	6020310539-0	Heavy Elastic Pin Ø3 X 36mm (Seeger Reno 701.067)	2		
36	6020310495-5	18-tooth sprocket	1		
37	6020130108-7	Grease Nipple 1/8" Straight Bsp-28F	1		
38	6020310481-5	16-tooth sprocket	1		
39	5024010057-3	Flat washer of ø29.5 x ø41 x 1.21mm	1		
40	5092010164-7	Gearbox	1		
41	5024010342-4	Q16.5 x Ø46 x 1.50mm Flat Washer	3		
42	5080010286-0	Larger Fertilizer Conductor Bushing	1		
43	6020030084-2	Ø50 x 35mm larger bushing	1		
44	6020010043-6	O-Ring 2-214 N3006-90Nbr (24.99)	2		
45	6020050381-6	Fertilizer Conductor	1		
46	6020051089-8	Long Steel Connection "A" 6 x 1/8" BSP	1		
47	6020051090-1	Long Steel Connection "Jma" 6 x 1/8" BSP	1		
48	5106010066-0	Fertilizer cover	1		
49	5400010116-0	Left Helical Conductor Q.17.5 x 175 x 7.93mm(Pitch 50.8mm)	1		
50	5024010341-6	Special plastic box washer	1		
51	6020030083-4	Bushing Ø52 X 27mm Smaller	1		
52	5080010285-2	Smaller Fertilizer Conductor Bushing	1		
53	5232010526-9	Fertilizer Shaft Q.5/8" X 295mm	1		
54	6020030302-7	Nozzle (07000002)	1		
55	6020051127-4	Ng Nozzle Cover Set	1		
56	6020071038-2	Fertisystem Body Adhesive /B (50002504)	3		
57	6020390067-0	Cross Cap (07000017)	1		
58	6020350530-5	Coating (07000003)	1		
59	6020370040-0	Worm S 2" Right Optional (Fertisystem 300305002)	1		
60	6020110095-2	Felt (07000023)	1		
61	6020010041-0	O-Ring 2-219 N3009-90Nbr (32.92)	1		
62	6020051128-2	Main Body (07000001)	1		
63	6020317449-0	Hex Self-Locking Nut W/nylon Low M8 X 1.25 Ma CI8 Ch.13mm Height.8.00mm (Zinc Brc)	4		
64	5024010073-5	Flat Washer Ø8.5 X Ø20 X 2.00mm	8		
65	6020310295-2	Screw Cab. Hexagonal With Slot M8 X 1.25 X 16mm CI 5.8 Rt(Bichromated)	2		

• Table Complete Deposit SPE 4000

Item	Code	Product Description	All	Transversal	Fertisystem
66	6020310680-0	Clip 0.70mm	2		
67	6020010230-7	Ring Lock (07000016)	1		
68	6020010008-8	O-Ring 2-209 N3006-90 Nbr (Ø17.04 x Ø3.53mm)	1		
69	6020010503-9	Square Stainless Steel Washer (07000060)	1		
70	6020010504-7	Washer Cleaner (07000006)	1		
71	6020090686-4	Ng Axis(Fertisystem 200201038)	1		
72	6020250494-1	Auto Lub Bearing Set (07100008)	1		
73	6020310561-7	Screw Cab. Hex M8 X 1.25 X 25mm Cl 5.8 Rt(Phosphatized)	4		
74	5528011026-3	Internal Bearing System for Fertisystem Conductors (450451001)	1		
75	6020250417-8	Auto-Lub Bearing (07000070)	1		
76	6020310604-4	Bearing Guard (07000071)	1		
77	6020350006-0	Rigid Ball Bearing 6006 2Rs Ddu	2		
78	6020071039-0	Fertisystem Auto Lub Adhesive (50002502)	1		
79	6020010706-6	044 X 057 X 14.5mm Worm Thread Carbon Steel Clamp	2		
79-A	6020015930-9	Clamp Ø35 x Ø51 x 13mm Carbon Steel Worm Drive	1		
80	6020310580-3	Pinion Drive (07000072)	1		
81	6020030074-5	Bushing (07000014)	1		
82	6020090064-5	Fertilizer hose extension	1		
83	5272010071-1	Fertilizer/Seed Hose Extension	1		
84	6020310909-4	Drive Pinion (Fertisystem 200201036)	1		
85	6020250054-7	Ø38 x Ø50.8 x 555mm hose (147 hose)	1		
85	6020250054-7	Ø38 x Ø50.8 x 555mm hose (147 hose) - used for conductor with groover	1		
86	6020030726-0	Universal Seed Spout W/Hole For Sensor(413mm)	1		
87	6020030727-8	Universal Seed Spout (440mm)	1		
88	6020030796-0	Round Spout W/Right Degree (Smaller)	1		
88	6020030797-9	Round Spout W/Left Degree (Smaller)	1		
89	6020390091-3	Blocking Tube "Optional" (Fertisystem 07000012)	1		
90	6020390093-0	Maintenance Tube "Optional" (Fertisystem 200201026)	1		
91	6020370042-6	Worm S 1" Right "Optional" (Fertisystem 300305001)	1		
92	6020390092-1	Fixing tube "Optional" (Fertisystem 300303005)	1		
93	5538010244-6	Complete Larger Channel Cover (Plastic Box)	1		
94	6020390815-9	Fertilizer spout cover	1		
95	6020030119-9	Round Spout W/Degree Left - All Conductors Except Straight Conductor	1		
95	6020030144-0	Larger Fertilizer Spout - Used For Straight Conductor	1		

Item	Code	Product Description	All	Transversal	Fertisystem
96	6020250322-8	Lock Spring Ø41.3 x 3.2mm			
97	6020250111-0	Ø38 x Ø50.8 x 400mm hose (110 hose) - all conductors except with groover	1		
98	6020250339-2	Lock Spring Ø48 x 3.2mm			
99	6020010706-6	044 X 057 X 14.5mm Worm Thread Carbon Steel Clamp	2		
100	6020030118-0	Round Spout W/Right Degree - All Conductors Except Straight Conductor	1		
101	5024010243-6	Ø30 x Ø39 x 0.91mm flat washer	2		
102	5150010188-5	Left Conductor Of Complete Fertilizer Impar Line	1		
103	5150010016-1	Straight Driver of Complete Fertilizer	1		
103	5150010187-7	Left Conductor of Complete Fertilizer	1		
103	5150010021-8	Straight conductor of complete fertilizer	1		
103	5150010086-2	Right Fertilizer Conductor For Automatic Disarm Furrower	1		
103	5150010087-0	Left Fertilizer Conductor For Automatic Disarm Furrower	1		
104	5208011638-1	Transverse Conductive Fertilizer Tank Spe Top Line 4000		1	
104	5208011639-0	Fertisystem Spe Top Line 4000 Conductive Fertilizer Tank			1
104	5208011148-7	Spe Top Line 4000 Transverse Conductor Full Tank	-		
104	5208011640-3	Complete Deposit Spe Top Line 4000 Conductor Fertisystem	-		

• Complete Deposit SPE 4500

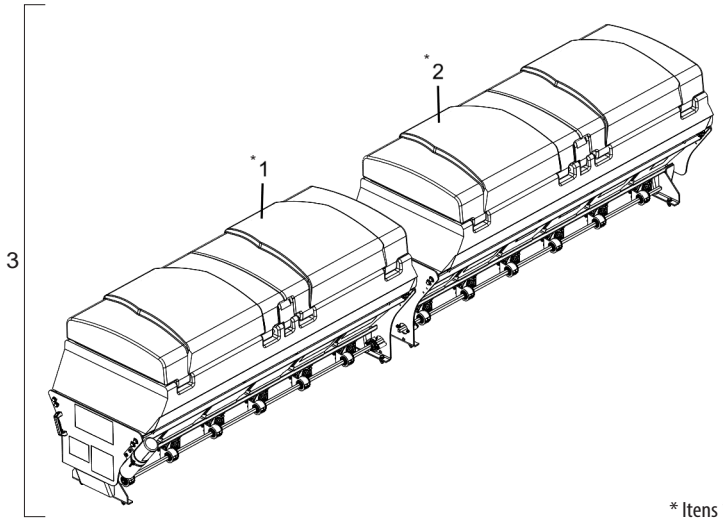

Item	Code	Product description	All
*1	5208013262-0	Right Side Fertilizer Tank 06 Outlets	1
*2	5208013263-8	Left Side Fertilizer Tank 06 Outlets	1
3	5528011313-0	Fertilizer Deposit System with Complete Fertisystem 4500 - With Stickers	1

* Itens 1 and 2 - See page 19

• Fertisystem Items and Fertilizer Conduits

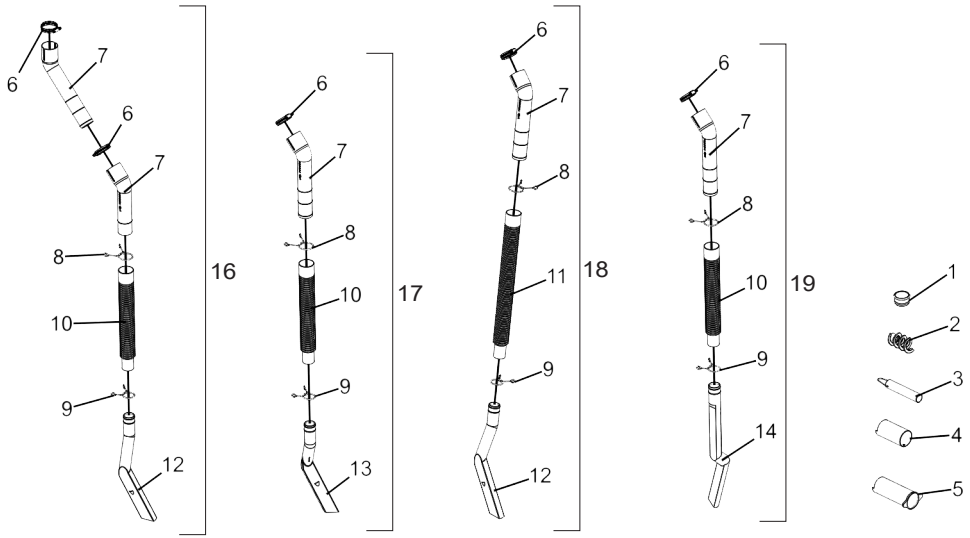

Item	Code	Product description	All
1	6020390815-9	Fertilizer Funnel Cover	1
2	6020370042-6	Spring S 1" Right "Optional" (Fertisystem 300305001)	1
3	6020390092-1	Fixator Tube - "Optional" (300303005)	1
4	6020390091-3	Block Tube - "Optional" (07000012)	1
5	6020390093-0	Maintenance Tube	1
6	6020010706-6	Clamp 044 X 057 X 14.5mm (Carbon Steel)	1
7	6020090064-5	Extension Of Fertilizer Hose	1
8	6020250339-2	Lock Spring	1
9	6020250322-8	Lock Spring	1
10	6020250111-0	Rubber Tube Ø38 X Ø50,8 X 400mm	1
11	6020250054-7	Rubber Tube Ø38 X Ø50,8 X 555mm	1
12	6020030119-9	Left Round Funnel	1
13	6020030118-0	Right Round Funnel	1
14	6020030144-0	Large Funnel Of Fertilizer	1
16	5150010188-5	Complete Fertilizer Left Conductor Odd Line	1
17	5150010016-1	Complete Fertilizer Right Conductor	1
17	5150010187-7	Complete Fertilizer Left Conductor	1
18	5150010086-2	Right Fertilizer Condutor For Automatic Disarm Furrower	1
18	5150010087-0	Left Fertilizer Condutor For Automatic Disarm Furrower	1
19	5150010021-8	Complete Straight Fertilizer Conductor	1

• Complete Fertilizer Deposit SPE 4500

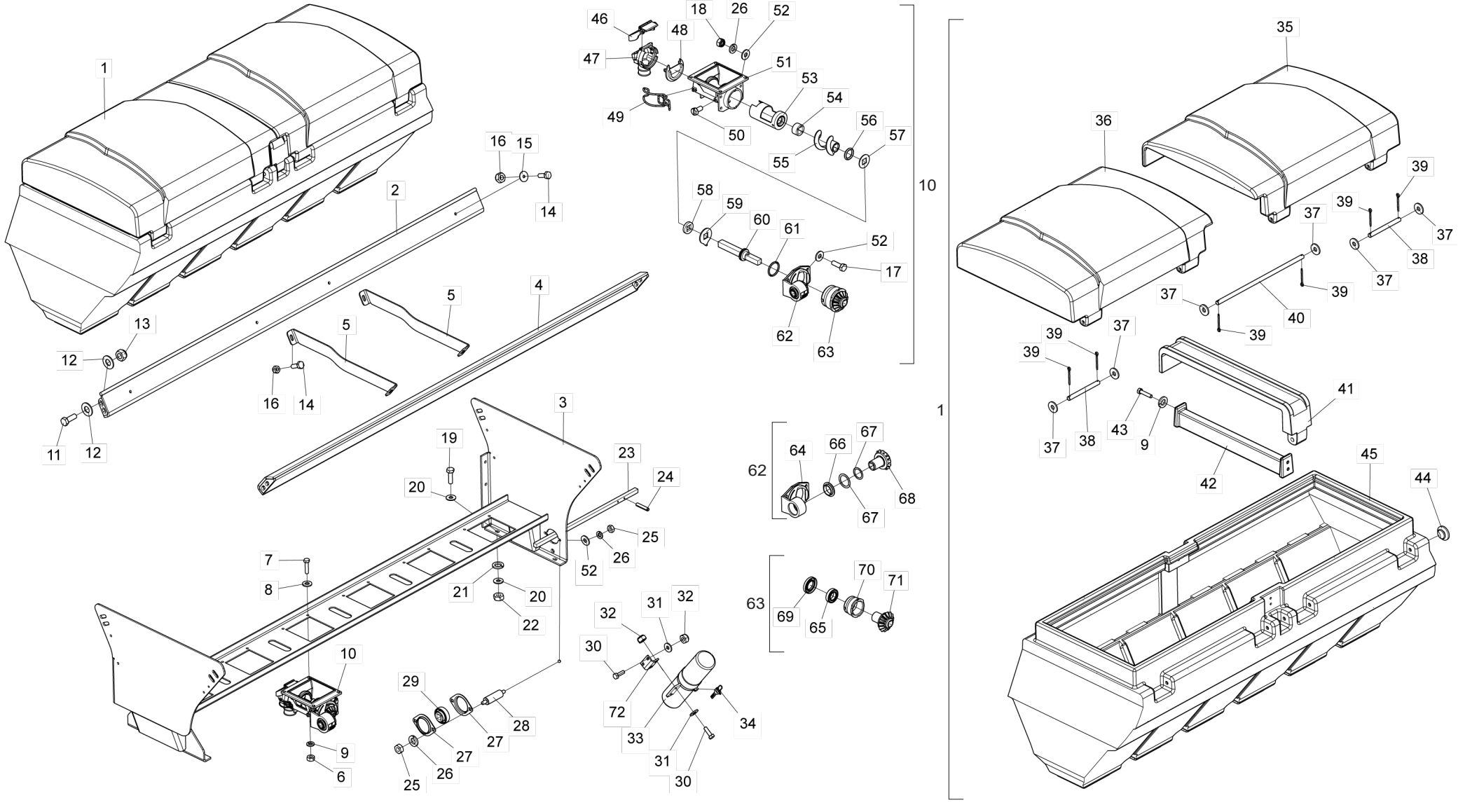

• Table Complete Fertilizer Deposit SPE 4500

Item	Code	Product description	All	Right	Left
1	6020050902-4	Full Plastic Box 4500/6500 With Cover	1		
2	5558010069-3	Rear Lock Of Support Of Box	1		
3	5530019557-0	Right Support of the Plastic Fertilizer Box 4500		1	
3	5530019558-9	Left Support of the Plastic Fertilizer Box 4500			1
4	5558010068-5	Front Lock Of Support Of Box	1		
5	5558010244-0	Lock Of Plastic Box Interica 4000 A 7500	2		
6	6020310730-0	Brass Hexagonal Nut M8 X 1,25 Ma Ch.13mm H.6,50mm	24		
7	6020310570-6	Hexagonal Head Bolt Inox M8 X 1,25 X 35mm Ma Rt	24		
8	6020010431-8	Plain Inox Washer Ø8,5 X Ø18 X 1,8mm	24		
9	6020010434-2	Pressure Washer Inox 5/16" Media	28		
10	6020051126-6	Batcher Kit Fertisystem Auto-Lub Ap/2D Ng Me	6		
11	6020310439-4	Hexagonal Head Bolt M12 X 1,75 X 35mm Cl8.8 Rt	8		
12	6020010432-6	Plain Inox Washer Ø13,3 X Ø27 X 2,4mm	16		
13	6020310847-0	Self-Locking Nut With Nylon M12 X 1 ,75 Ma Cl8 Ch.19mm H.12,00mm	8		
14	6020310171-9	Hexagonal Head Bolt Inox M10 X 1,50 X 30mm Ma Rt	8		
15	5024010428-5	Stainless Smooth Washer Of Ø10,50 X Ø40 X 2,50mm	4		
16	6020310815-2	Self-Locking Inox Hexagonal Nut With Nylon Low M10 X 1,50 Ma Ch.17mm	8		
17	6020310448-3	Hexagonal Head Bolt M8 X 1,25 X 25mm Cl8.8 Rt	24		
18	6020317449-0	Self-Locking Nut With Nylon Low M8 X 1,25 Ma Cl8 Ch.13mm H.8,00mm	24		
19	6020310036-4	Hexagonal Head Bolt M10 X 1,25 X 35mm Cl8.8 Rt	4		
20	5024010075-1	Smooth Washer Ø10,3 X Ø25 X 2,00mm	8		
21	6020010394-0	Pressure Washer M10 Media	4		
22	6020310822-5	Hexagonal Nut M10 X 1,50 Ma Cl8 Ch.17mm H.8,00mm	4		
23	5232011117-0	Fertilizer Front Shaft	1		
24	6020310471-8	Heavy Elastic Pin Ø6 X 30mm	2		
25	6020310744-0	Hexagonal Nut 5/16" 18F Unc Gr5 Ch.1/2" Height 6,50mm	4		
26	6020010404-0	Pressure Washer 5/16" Media Industry	28		
27	6020250412-7	Steel Plate Bearing 03.52 Mst	2		
28	5232011118-8	Fixation Shaft	2		
29	6020250117-9	Bearing Assy F-110934.1	1		
30	6020312403-4	Hexagonal Head Bolt M6 X 1,00 X 20mm Cl8.8 Rt		4	
31	5024010161-8	Smooth Washer Ø7 X Ø18 X 2,00mm		4	
32	6020317442-2	Self-Locking Nut With Nylon Low M6 X 1,00 Ma Cl8 Ch.10mm H.6,00mm		4	
33	6020050642-4	Container For Instruction Manual		1	
34	6020230100-5	Seal For Container For Instruction Manual		1	
35	6020390442-0	Left Cover Of Plastic Hopper	1		
36	6020390443-9	Right Cover Of Plastic Hopper	1		
37	5024010298-3	Smooth Washer Ø17 X Ø44 X 4,75mm	6		
38	6020310542-0	Small Pin Of Hopper Cover	2		
39	6020050109-0	Cotterpin 1/8" X 1.1/2"	6		
40	6020310541-2	Large Pin of Hopper Cover	1		
41	6020390126-0	Central Cover	1		
42	6020390314-9	Lock of Fertilizer Hopper W/Bushing	1		
43	6020310894-2	Hexagonal Head Bolt Inox 5/16" X 1.1/2" 18F Unc2A Rt	4		
44	6020390342-4	Buffer Of Fertilizer Plastic Hopper	1		
45	6020050903-2	One-piece plastic box (Red RAL 3020)	1		
46	6020051127-4	Nozzle Cover Kit Ng	6		

Item	Code	Product description	All	Right	Left
47	6020030302-7	Nozzle	6		
48	6020390067-0	Transversal Cover	6		
49	6020310680-0	Clamp 0,70mm	12		
50	6020310295-2	Hexaon Head Slotted Bolt M8 X 1,25 X 16mm Cl 5.8 Rt	12		
51	6020051128-2	Main Body	6		
52	5024010073-5	Smooth Washer Ø8,5 X Ø20 X 2,00mm	50		
53	6020350530-5	Coat	6		
54	6020010230-7	Lock Ring	6		
55	6020370040-0	Spring S 2" Right	6		
56	6020010008-8	O´Ring 2-209 N3006-90 Nbr (Ø17,04 X Ø3,53mm)	6		
57	6020010503-9	Square Inox Washer	6		
58	6020110095-2	Felt	6		
59	6020010504-7	Cleaning Washer	6		
60	6020090686-4	Shaft Ng	6		
61	6020010041-0	O´Ring 2-219 N3009-90Nbr (32,92)	6		
62	6020250494-1	Self Lubricating Bearing Assembly	6		
63	5528011026-3	Internal Bearing System for Drivers	6		
64	6020250417-8	Bearing Auto-Lub	6		
65	6020350006-0	Deep Groove Ball Bearing 6006 2RS DDU	12		
66	6020310604-4	Bearing Protection	6		
67	5024010243-6	Smooth Washer Ø30 X Ø39 X 0,91mm	12		
68	6020310580-3	Actuation Pinion	6		
69	6020350320-5	Retainer Ø30,00 X Ø52,00 X 8,00mm	6		
70	6020030074-5	Bushing	6		
71	6020310909-4	Pinion Drive	6		
72	5136180360-8	Container Support Plate		1	

• Seed Deposit System 3rd Deposit

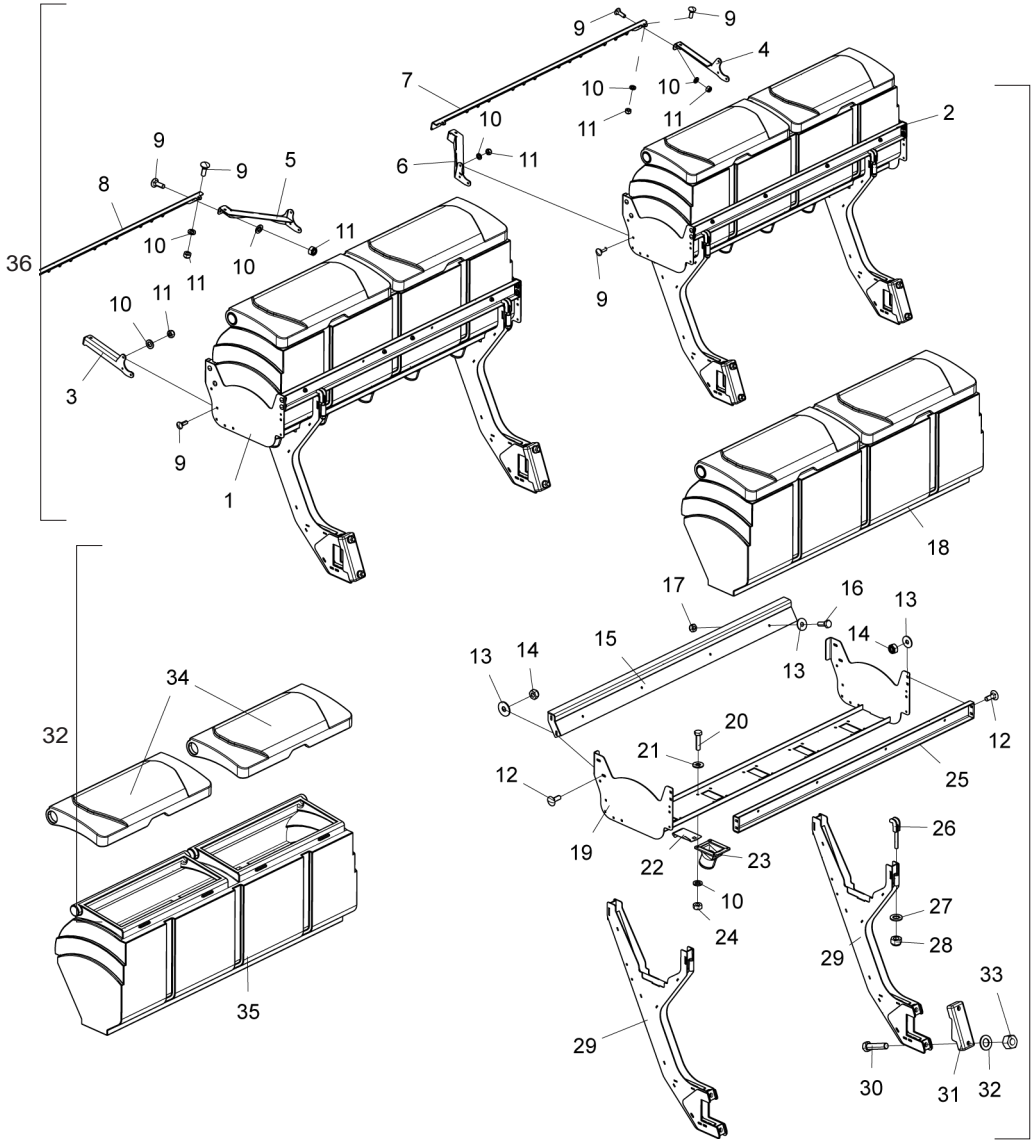

Item	Code	Product description	All	7 Lines	9 Lines
1	5208013260-3	Right seed deposit		1	
1	5208013258-1	Right seed deposit			1
2	5208013261-1	Left Seed Deposit		1	
2	5208013259-0	Left Seed Deposit			1
3	5136024031-6	Right Spring Support Plate	1		
4	5136024026-0	Left Spring Support Plate	1		
5	5530019889-8	Left spring support	1		
6	5136024028-6	Right Spring Support Plate	1		
7	5530025303-1	Rear spring bracket 1540mm		1	
7	5136024027-8	Rear Support Plate Of The Springs With 1863mm			1
8	5530025304-0	Rear Spring Bracket 1539mm		1	
8	5136024027-8	Rear Support Plate Of The Springs With 1863mm			1
9	6020317457-0	French Cab Screw M8 X 1.25 X 25mm Cl8.8 Rt	20		
10	6020016104-4	Flat Washer M8 Ø8.4 X 17 X 1.6mm		60	68
11	6020317449-0	Low Self-Locking Hex Nut W/Nylon M8 X 1.25 Ma Cl8 Ch.13mm Height.8.00mm	20		
12	6020317544-5	French Cab Screw M10 X 1.50 X 30mm Cl8.8 Rt	16		
13	6020010443-1	Flat Washer M10 Ø10.50 X Ø30.00 X 2.50mm	32		
14	6020317435-0	Low Self-Locking Hex Nut W/Nylon M10 X 1.50 Ma Cl8 Ch.17mm Height.10.00mm	16		
15	5530014871-8	Fertilizer Cradle Support Plastic Box		2	
15	5530014808-4	Fertilizer Cradle Support Plastic Box			2
16	6020310171-9	Hex Bolt M10 X 1.50 X 30mm Ma Rt	16		
17	6020310815-2	Hex Nut Of Stainless Steel Self-Locking W/nylon Low M10 X 1.50 Ma Ch.17mm Height.9.64mm	16		
18	6020071647-0	Plastic Fertilizer Tank with Lid(4000)		2	
18	6020071637-2	Plastic Fertilizer Tank With Lid(5000)			2
19	5530015233-2	Plastic Box Center Support		2	
19	5530015231-6	Plastic Box Center Support			2
20	6020310570-6	Hex Head Screw Stainless Steel M8 X 1.25 X 35mm Ma Rt		40	48
21	6020010431-8	Stainless Steel Flat Washer Ø8.5 X Ø18 X 1.8mm		40	48
22	5538014737-7	Seed Dispenser Cover		10	12
23	5052010050-1	Larger Seed Spout 3rd Deposit		10	12
24	6020310730-0	Brass Hex Nut M8 X 1.25 Ma Ch.13mm Height.6.50mm		40	48
25	5530015228-6	Front Seed Cradle Holder		2	
25	5530015129-8	Front Seed Cradle Holder			2
26	5558010491-5	Seed Tank Lock Complete	8		
27	6020015985-6	Flat Washer M16 Ø17.00 X Ø30.00 X 3.00mm	8		
28	6020317443-0	Low Self-Locking Hex Nut W/Nylon M16 X 2.00 Ma Cl8 Ch.24mm Height.16.00mm	8		
29	5530025148-9	Support 3rd Seed Deposit	4		
30	6020311128-5	Hex Head Screw 3/4" X 3.1/2" 16F Unf1A Gr5 Rp	8		
31	6010602573-0	Pantograph Line Clamp	4		
32	6020015986-4	Flat Washer M20 Ø21.00 X Ø37.00 X 3.00mm	8		
33	6020310817-9	Hex Nut 3/4" 16F Unf Gr5 Ch.1.1/4" Height.18.50mm	8		
34	6020390930-9	Plastic Cover of Fertilizer and Seed Box 4000		4	
34	6020390915-5	Plastic Cover of Fertilizer and Seed Box 5000			4
35	6020055339-2	Plastic Box for Interiça Fertilizer 4000 W/O Lid (Red RAL 3020)		2	
35	6020071638-0	Plastic Box for Interiça Fertilizer 5000 W/O Lid (Red RAL 3020)			2
36	5528011310-6	Seed Deposit System 7 Lines - W/Adhesives		1	
36	5528011309-2	9 Row Seed Deposit System - W/Adhesives			1

• Complete Wheel Support

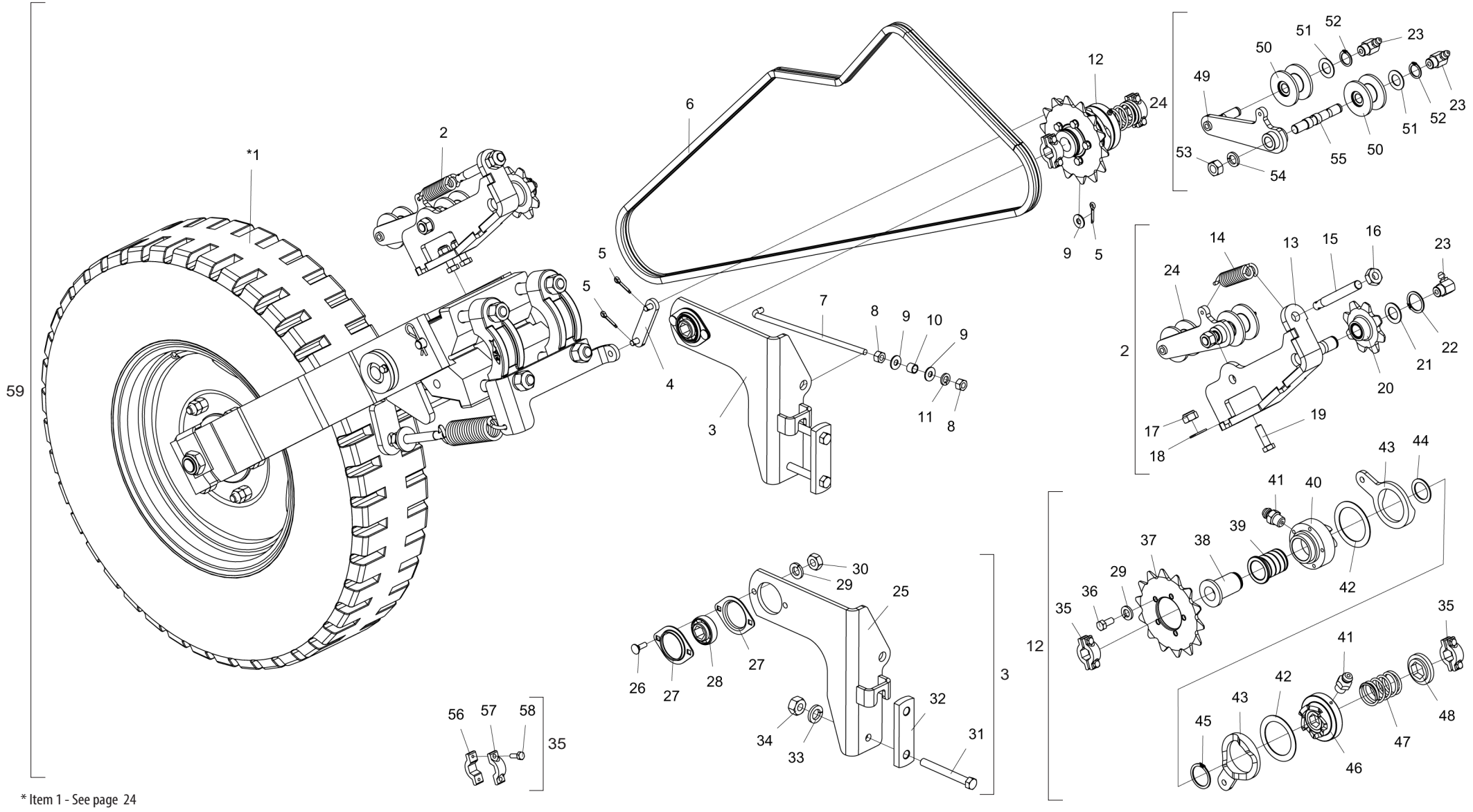

* Item 1 - See page 24

• Table Complete Wheel Support

Item	Code	Product description	All	Right	Left
*1	5530017509-0	Right Auxiliary Support of Wheel		1	
*1	5530017510-3	Left Auxiliary Support of Wheel			1
2	5268010851-0	Complete Right Chain Stretcher		1	
2	5268010852-8	Complete Left Chain Stretcher			1
3	5530012381-2	Complete Right Support Of Ratchet		1	
3	5530012404-5	Complete Left Support Of Ratchet			1
4	5326011618-1	Disarm Shank With Pin	1		
5	6020050099-0	Cotterpin 1/8" X 3/4"	3		
6	6020059066-2	Chain 2050 C53 86 Links + Reduction	1		
7	5484010104-8	Ratchet Disarm Regulator	1		
8	6020310746-6	Hexagonal Nut 3/8" 16F Unc Gr5 Ch.9/16" Height 8,50mm	2		
9	5024010075-1	Smooth Washer Ø10,3 X Ø25 X 2,00mm	3		
10	5080010863-0	Spacer Bushing Of Shank Of Disarm	1		
11	6020010406-7	Pressure Washer 3/8" Media Industry	1		
12	5132010016-3	Complete Right Ratchet		1	
12	5132010015-5	Complete Left Ratchet			1
13	5530016891-3	Right Support of Pulley		1	
13	5530016892-1	Left Support of Pulley			1
14	6020250241-8	Helical Spring Ø16 X Ø26 X 88mm	1		
15	5296010019-0	Spindle Ø5/8" X 130mm	1		
16	6020310738-5	Hexagonal Nut 5/8" 11F Unc Gr5 Ch.1.1/16" Height 11,00mm	2		
17	6020310847-0	Self-Locking Nut With Nylon M12 X 1 ,75 Ma Cl8 Ch.19mm H.12,00mm	2		
18	5024010162-6	Smooth Washer Ø13 X Ø26 X 2,00mm	2		
19	6020310152-2	Hexagonal Head Bolt M12 X 1,75 X 40mm Cl8.8 Rp	2		
20	5256010084-1	Gear 8 Teeth With Bronze	1		
21	5024010137-5	Smooth Washer Ø23 X Ø38 X 2,00mm	1		
22	6020010258-7	Retaining Oring	1		
23	6020130112-5	Grease Fitting 1/8"	3		
24	5268010854-4	Complete Right Chain Stretcher		1	
24	5268010853-6	Complete Left Chain Stretcher			1
25	5530012382-0	Right Support Of Ratchet		1	
25	5530012389-8	Left Support Of Ratchet			1
26	6020310161-1	French Head Bolt 5/16" X 1" 18F Unc Gr2 Rt	2		
27	6020250412-7	Steel Plate Bearing 03.52 Mst	2		
28	6020350878-9	Bearing Sq-014205 Krrb Hexagonal Hole 7/8"	1		

Item	Code	Product description	All	Right	Left
29	6020010404-0	Pressure Washer 5/16" Media Industry	7		
30	6020310744-0	Hexagonal Nut 5/16" 18F Unc Gr5 Ch.1/2" Height 6,50mm	2		
31	6020311066-1	Hexagonal Head Bolt 1/2" X 4.1/2" 12F W Gr5 Rp	2		
32	5136020318-6	Support Plate	1		
33	6020010410-5	Pressure Washer 1/2" Media Industry	2		
34	6020310754-7	Hexagonal Nut 1/2" 12F W Gr5 Ch.7/8" Height 12,00mm	2		
35	5460010011-7	Complete Shaft Of Clamp	2		
36	6020312020-9	Hexagonal Head Bolt 5/16" X 3/4" 18F Unc1A Gr5 Rt	5		
37	5256010240-2	Gear 14 Teeth With Central Hole Ø60mm	1		
38	5080010857-5	Hexagonal Bushing Of 7/8"	1		
39	5080010856-7	Bronze Bushing	1		
40	5256010249-6	External Right Gear Of Right Ratchet		1	
40	5256010242-9	External Left Gear Of Right Ratchet			1
41	6020130100-1	Grease Fitting 1/4"	2		
42	5024010503-6	Back Washer Of Ratchet	3		
43	5526010033-4	Separator	2		
44	5024010133-2	Smooth Washer Ø32 X Ø45 X 2,00mm	1		
45	6020010264-1	Retaining Oring	1		
46	5256010248-8	Internal Right Gear Of Right Ratchet		1	
46	5256010241-0	Internal Left Gear Of Right Ratchet			1
47	6020250500-0	Ratchet Spring	1		
48	5024010513-3	Washer De Ø45 X 9,5mm	1		
49	5530016917-0	Left Support of Stretcher		1	
49	5530016918-9	Right Support of Stretcher			1
50	6020350848-7	Stretcher Pulley	2		
51	5024010059-0	Smooth Washer Ø16,5 X Ø29 X 1,21mm	2		
52	6020010250-1	Retaining Oring	2		
53	6020310818-7	Hexagonal Nut M16 X 2,00 Ma Cl8 Ch.24mm H.13,00mm	1		
54	6020010124-6	Pressure Washer M16 Media	1		
55	5432010757-4	Wheel Support Pin	1		
56	5460010013-3	Shaft Clamp Hexagonal 7/8" With Hole With Thread	1		
57	5460010012-5	Shaft Clamp Hexagonal 7/8" With Hole Passante	1		
58	6020310016-0	Hexagonal Head Bolt 1/4" X 3/4" 20F Unc1A Gr5 Rt	2		
59	5530017507-3	Complete Right Wheel Support (2019)		1	
59	5530017508-1	Complete Left Wheel Support (2019)			1

BALDAN

• Complete Auxiliary Wheel Support

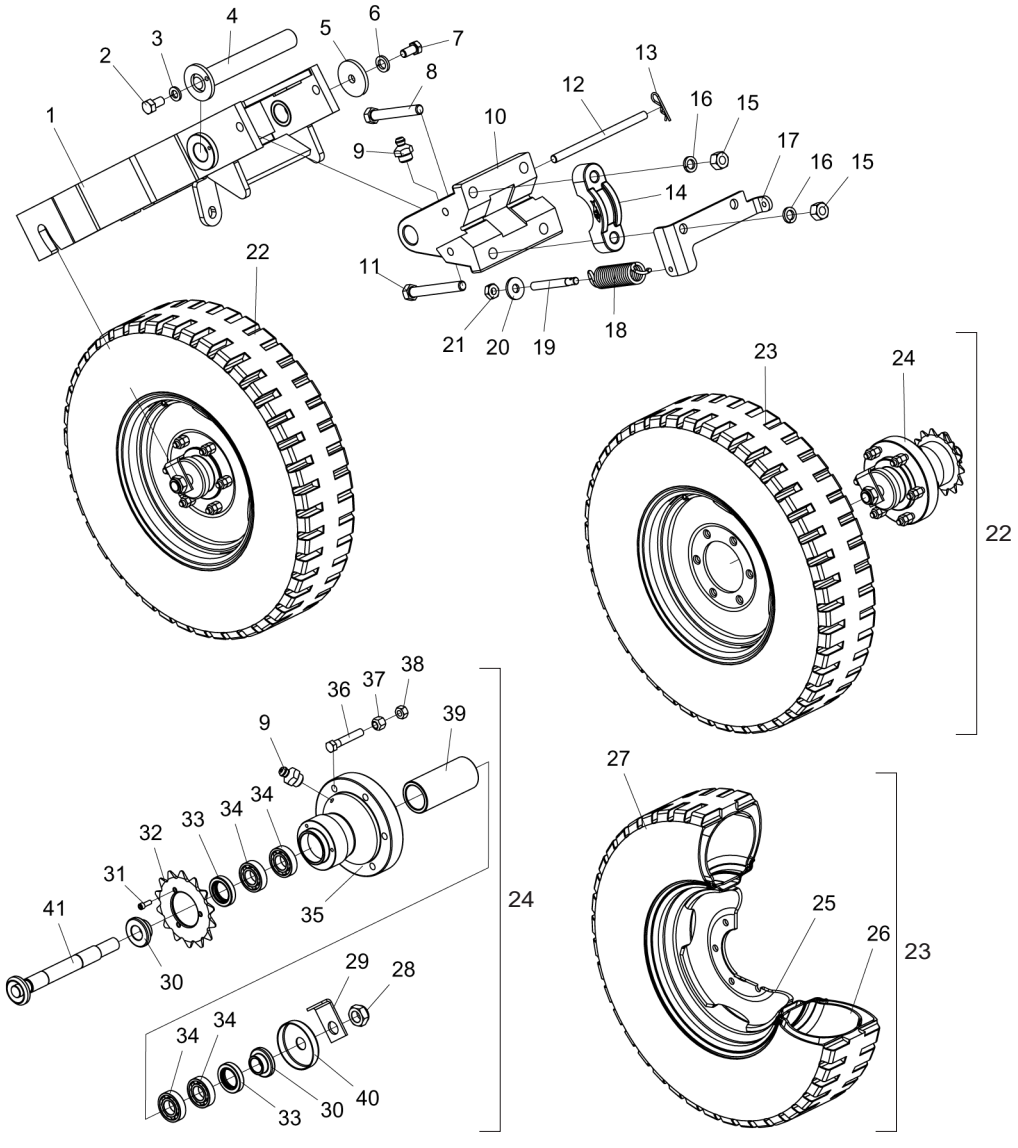

Item	Code	Product description	All	Right	Left
1	5530017501-4	Right Wheel Support		1	
1	5530017502-2	Left Wheel Support			1
2	6020310197-2	Hexagonal Head Bolt 5/16" X 5/8" 18F Unc1A Gr5 Rt	1		
3	6020010404-0	Pressure Washer 5/16" Media Industry	1		
4	5232011120-0	Wheel Support Shaft	1		
5	5024010505-2	Smooth Washer Ø17 X Ø76 X 8,00mm	1		
6	6020010412-1	Pressure Washer 5/8" Media Industry	1		
7	6020310447-5	Hexagonal Head Bolt 5/8" X 1.1/4" 11F Unc Gr5 Rt	1		
8	6020311124-2	Hexagonal Head Bolt 3/4" X 6.1/2" 10F Unc1A Gr5 Rp	2		
9	6020130108-7	Grease Fitting 1/8"	2		
10	5068010121-0	Clamp	1		
11	6020311107-2	Hexagonal Head Bolt 3/4" X 6" 10F Unc1A Gr5 Rp	2		
12	5432010309-9	Pin Of Ø5/8" X 250mm	1		
13	6020390294-0	Lock Nma - Type "R" Ø3,5 X 67mm(Special)	2		
14	6010602439-4	Bearing Of Wheel Support For Shaft Ø3.1/2"	2		
15	6020310770-9	Hexagonal Nut 3/4" 10F Unc Gr5 Ch.1.7/32" Height 18,50mm	4		
16	6020010414-8	Pressure Washer 3/4" Media Industry	4		
17	5530012379-0	Right Support Of Spring		1	
17	5530012386-3	Left Support of Spring			1
18	6020250307-4	Helical Spring Ø32 X Ø44 X 142mm	1		
19	5296010019-0	Spindle Ø5/8" X 130mm	1		
20	5024010298-3	Smooth Washer Ø17 X Ø44 X 4,75mm	1		
21	6020310738-5	Hexagonal Nut 5/8" 11F Unc Gr5 Ch.1.1/16" Height 11,00mm	2		
22	5498010386-5	Complete Wheel 700 x 16 x 10 Plies (Center 3/8")	1		
23	5498010165-0	Complete Wheel 700 X 16 X 10 Ply Military Tyre (Center 3/8")	1		
24	5204010479-8	Complete Wheel Hub (2016)	1		
25	6020350899-1	Rim 5,5" X 16" 2268/16551B (Reinforced) Center 3/8"	1		
26	6020050356-5	Inner Tube 750X16	1		
27	6020310375-4	Tyre 700 X 16 X 10 Ply	1		
28	6020310814-4	Self-Locking Nut With Nylon 1" 14F Uns Gr5 Ch.1.1/2" H.20,00mm	1		
29	5558210007-0	Lock "L" Of Shaft	1		
30	5080010144-9	Back Bushing	2		
31	6020310098-4	Allen Bolt C/C 5/16" X 7/8" 18F Unc1A Cl12.9 Rt (Phosphated)	3		
32	5256030004-2	Gear 14 Teeth With Central Hole Ø73,2mm	1		
33	6020350201-2	Retainer Ø40,00 X Ø62,00 X 12,00mm	2		
34	6020350007-9	Bearing 6206(Skf-Nsk-Timken)	4		
35	5204010214-0	Wheel Hub	1		
36	6020310997-3	Hexagonal Head Bolt 9/16" X 3.1/4" 18F Unf1A Gr5 Rp	6		
37	6020310816-0	Double Conic Hexagonal Nut Of Wheel 9/16" 18F Unf Gr5 Ch.7/8" Height 19,00mm	6		
38	6020310736-9	Hexagonal Nut 9/16" 18F Unf Gr5 Ch.7/8" Height 12,50mm	6		
39	5080011518-0	Hub Spacing Wheel	1		
40	5096010009-0	Hub Cap	1		
41	5232011858-1	Wheel Shaft	1		

• Complete Line Marker

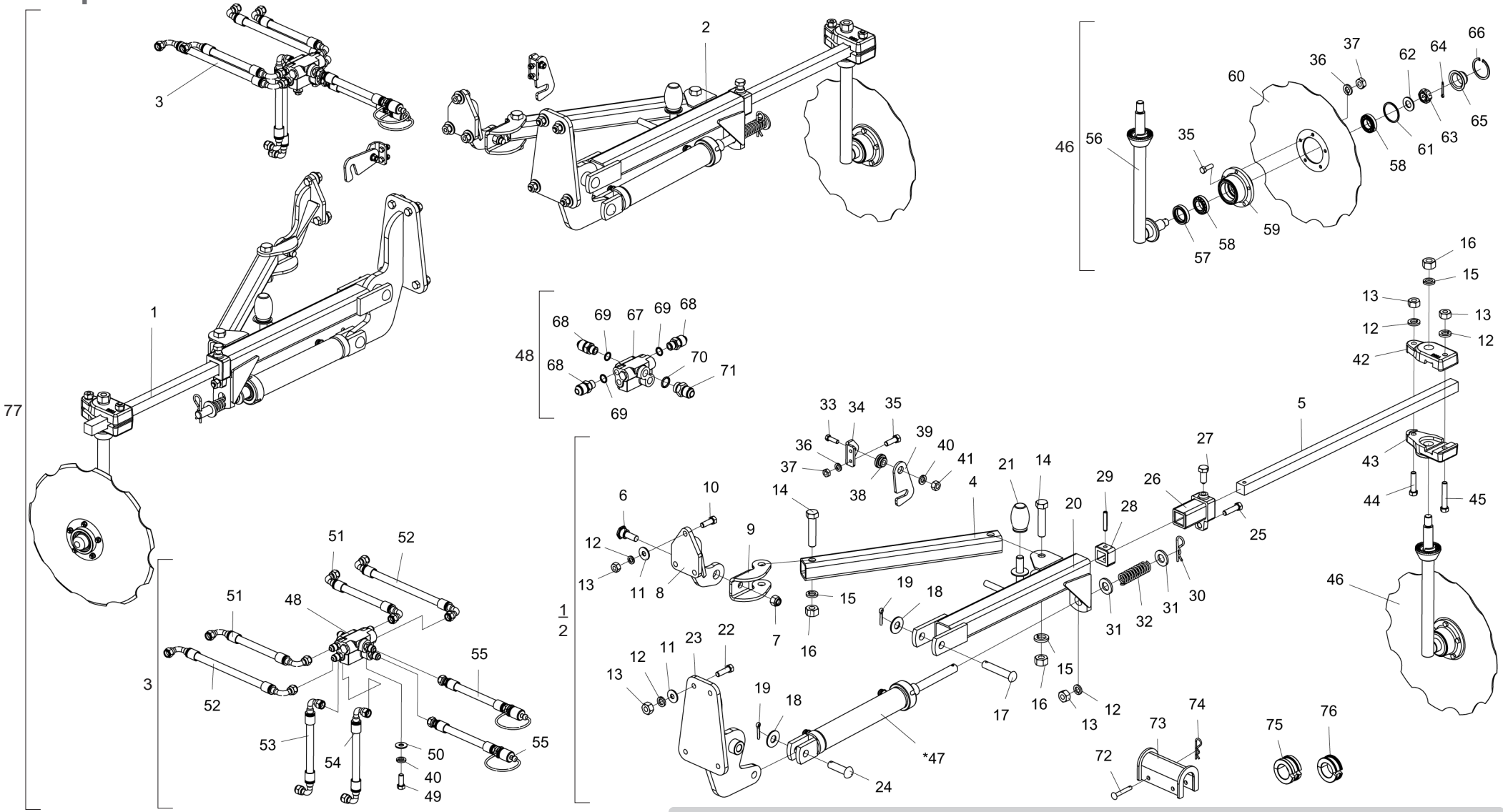

* Item 47 - See page 27

The Complete Line Marker (77) consists of all the parts listed in this list. However, when sold complete, items 72 to 76 will not accompany it.

• Table Complete Line Marker

Item	Code	Product description	All	4000	4500
1	5386010229-0	Full Right Line Marker	1		
2	5386010230-3	Complete Left Line Marker	1		
3	5528011356-4	Spe 4000 Hydraulic System (3rd tank)		1	
3	5528011357-2	Spe 4500 Hydraulic System (3rd tank)			1
4	5552010508-4	Tube Sq.50 X 550mm	1		
5	5040080028-3	Square Bar De 1.1/8" X 830mm With Hole	1		
6	6020312002-0	Hexagonal Head Bolt 5/8" X 2" 18F Unf1A Gr5 Rt Special	1		
7	6020310761-0	Self-Locking Nut With Nylon 5/8" 18F Unf Gr5 Ch.15/16" H.19,50mm	1		
8	5530012413-4	Rear Support Of Marker	1		
9	5136010369-6	Guide Plate Of Lock Of Marker	1		
10	6020312001-2	Hexagonal Head Bolt 1/2" X 1.1/2" 12F W Gr5 Rt	3		
11	5024010068-9	Smooth Washer Ø13,3 X Ø35,5 X 3,00mm	7		
12	6020010410-5	Pressure Washer 1/2" Media Industry	10		
13	6020310754-7	Hexagonal Nut 1/2" 12F W Gr5 Ch.7/8" Height 12,00mm	10		
14	6020311098-0	Hexagonal Head Bolt 3/4" X 3.1/2" 10F Unc1A Gr5 Rp	2		
15	6020010414-8	Pressure Washer 3/4" Media Industry	3		
16	6020310770-9	Hexagonal Nut 3/4" 10F Unc Gr5 Ch.1.7/32" Height 18,50mm	3		
17	6020310589-7	Pin Ø3/4" X 95mm	1		
18	5024010142-1	Smooth Washer Ø20,3 X Ø46,5 X 3,00mm	2		
19	6020050104-0	Cotterpin 3/16" X 1"	2		
20	5530012414-2	Right Support Of Marker		1	
20	5530012415-0	Left Support Of Marker			1
21	6020030170-9	Absorver Shock	1		
22	6020317427-9	Hexagonal Head Bolt 1/2" X 1.3/4" 12F W Gr5 Rt	4		
23	5530012412-6	Front Support Of Row Marker	1		
24	6020310597-8	Pin Ø3/4" X 62mm	1		
25	6020310049-6	Hexagonal Head Bolt 1/2" X 2" 12F W Gr5 Rp	1		
26	5324050013-9	Guide Of Bar	1		
27	6020312082-9	Hexagonal Head Bolt 5/8" X 1.1/2" 11F Unc1A Gr5 Rt	1		
28	5324020018-6	Lower Bar Guide	1		
29	6020310510-2	Heavy Elastic Pin Ø10 X 55mm	1		
30	6020390308-4	Lock Nma - Type "R" Ø4,5 X 80mm	1		
31	5024010001-8	Smooth Washer Ø23,5 X Ø44,5 X 4,75mm	2		
32	6020250242-6	Helical Spring Ø23,5 X Ø31,5 X 100mm Internal	1		
33	6020310026-7	Hexagonal Head Bolt 3/8" X 1.1/4" 16F Unc1A Gr5 Rt	1		
34	5136010756-0	Plate "L" Of Lock Marker	1		
35	6020310038-0	Hexagonal Head Bolt 5/16" X 1" 18F Unc1A Gr5 Rt	7		
36	6020010404-0	Pressure Washer 5/16" Media Industry	7		
37	6020310744-0	Hexagonal Nut 5/16" 18F Unc Gr5 Ch.1/2" Height 6,50mm	7		
38	5080010264-0	Bushing Of Ø10,3 X Ø30 X 13mm	1		
39	5558010046-4	Fixation Lock Of Marker	1		
40	6020010406-7	Pressure Washer 3/8" Media Industry	3		

Item	Code	Product description	All	4000	4500
41	6020310746-6	Hexagonal Nut 3/8" 16F Unc Gr5 Ch.9/16" Height 8,50mm	1		
42	6010601393-7	Lower Rosette Of Row Marker	1		
43	6010601392-9	Upper Rosette Of Row Marker	1		
44	6020312060-8	Hexagonal Head Bolt 1/2" X 2.1/4" 12F W Gr5 Rp	1		
45	6020311057-2	Hexagonal Head Bolt 1/2" X 3" 12F W Gr5 Rp	1		
46	5386010138-2	Row Marker		1	
46	5386010139-0	Row Marker			1
*47	6020055702-9	Hydraulic Cylinder "O.D" Ø1.1/4" X Ø2" X 246mm(Course) X 499mm(Closed)	1		
48	5224010104-1	Complete Oil Distributor With 8 Nipples	1		
49	6020310054-2	Hexagonal Head Bolt 3/8" X 1" 16F Unc1A Gr2 Rt	2		
50	5024010075-1	Smooth Washer Ø10,3 X Ø25 X 2,00mm	2		
51	6020250838-6	High Pressure Hydraulic Hose 3/8" X 2550mm With 2Tcg (Sae 100R2 At - P.T.4800Psi)		2	
51	6020250761-4	High Pressure Hydraulic Hose 3/8" X 3000mm With 2Tcg (Sae 100R2 At - P.T.4800Psi)			2
52	6020250837-8	High Pressure Hydraulic Hose 3/8" X 2850mm With 2Tcg (Sae 100R2 At - P.T.4800Psi)		2	
52	6020250762-2	High Pressure Hydraulic Hose 3/8" X 3300mm With 2Tcg (Sae 100R2 At - P.T.4800Psi)			2
53	6020252376-8	High Pressure Hydraulic Hose 3/8"x 235mm W/ TCG90º x TCG45º - 180º (SAE 100R2 AT - P.T.4800PSI) (3º Dep.)	1		
54	6020252377-6	High Pressure Hydraulic Hose 3/8"x 165mm C/ TRG X TCG-90º (SAE 100R2 AT - P.T.4800PSI) (3º Dep.)	1		
55	5372011092-6	Hose Ø3/8" X 3000mm With 1Trg And 1Trf With Male Quickly Coupling	2		
56	5386010142-0	Row Marker		1	
56	5386010141-2	Row Marker			1
57	6020350268-3	Retainer Ø36,00 X Ø52,00 X 11,00mm	1		
58	6020350077-0	Bearing 44610/49	2		
59	5204010247-7	Disc Hub	1		
60	2759366580-7	Concave Notched Disc Blade 16 X 3,50 Hc Rd 74mm + 5H Rd 8,7mm R=48mm Single Bevel	1		
61	6020010130-0	Gascket Ring 050 X 057 X 2mm	1		
62	5024010258-4	Smooth Washer Ø20 X Ø38,5 X 3,00mm	1		
63	6020310797-0	Nut 3/4" 16F Unf Gr5 Ch.1.1/16" Height 13,00mm	1		
64	6020050101-5	Cotterpin 1/8" X 1"	1		
65	6020050649-1	Hub Cap (External Diameter 57,00mm)	1		
66	6020011025-3	Retaining Ring I-058	1		
67	6020430196-7	Valve Block	1		
68	5412010008-7	Nipple R.3/4" Unf X R.9/16" Unf X 40mm With Hexagonal 3/4"	6		
69	6020010025-8	O´Ring 6-091 N3006-90Nbr(Ø12,00 X 2,00mm)	6		
70	6020010022-3	O´Ring 2-114 N3006-90Nbr (15,54)	2		
71	5412010035-4	Nipple R.3/4" Unf X R.3/4" Unf X 38mm With Hexagonal 7/8"	2		
72	6020310421-1	French Head Pin Ø9,8 X 61mm	2		
73	5558010309-9	Piston Lock Of Shank Of Ø41,27 X 155mm	1		
74	6020390294-0	Lock Nma - Type "R" Ø3,5 X 67mm(Special)	2		
75	5348010023-5	Complete Limiter Of 35mm	1		
76	5348050006-3	Complete Limiter Of Ø42 X 25mm	1		
77	5386010231-1	Complete Line Marker SPE 4000 (3rd Tank)		1	
77	5386010232-0	Complete Line Marker SPE 4500 (3rd Tank)			1

• Line Marker Hydraulic Cylinder

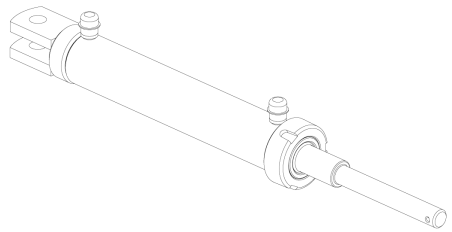

For the purpose of replacing parts, please check the cylinder liner for - The Baldan Code, the Code and name of the manufacturer and the date of manufacture.

Sealing kit LENIORS

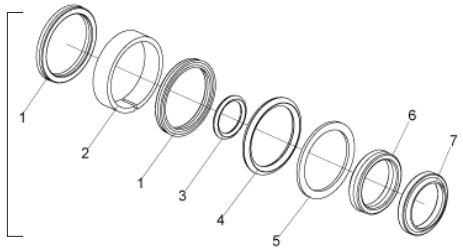

Item	Code	Product description	All
		Sealing kit LENIORS	
1	J003567	Gasket Std 1870-1625	2
2		Guide Ring W2-2000-500 (Ø2" x 1/2")	1
3		Ring O´Ring 2-126 (Ø21,82 x Ø3,53mm)	1
4		Ring O´Ring 2-326 (Ø40,64 x Ø5,33mm)	1
5		Parback 8-326	1
6		Gasket B 1870-1250-312B	1
7		Cleaner D-1250 (1-1/4" x 1-5/8" x 3/16")	1
-	6020190184-0	Repair Kit Leniors J003567	1

Sealing kit MOCDROL

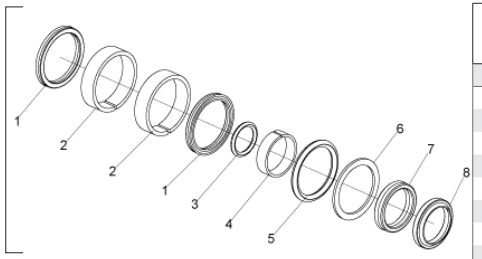

Item	Code	Product description	All
		Sealing kit MOCDROL	
1	49001607	Gasket 1870-1625	2
2		Guide Ring 2199-011-6	2
3		O'Ring 2-114	1
4		Guide Ring W2-2000-500 (Ø2" x 1/2")	1
5		O'Ring 2-224	1
6		Ring Parback 8-224	1
7		Gasket 1870-1250-312B	1
8		Cleaner D-1250 (1-1/4" x 1-5/8" x 3/16")	1
-	6020190156-4	Repair Kit Mocdrol 49001607	1

• Hydraulic System without Line Marker

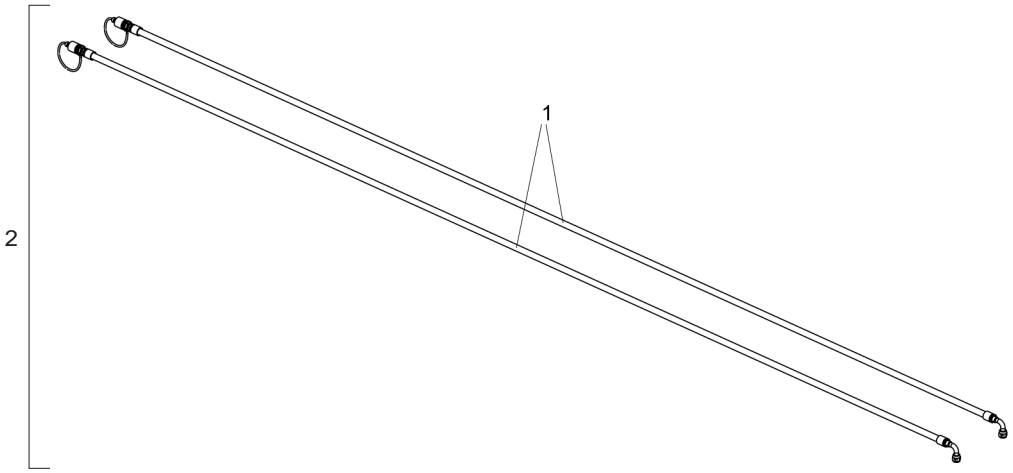

Item	Code	Product description	All
1	5372011104-3	Hose Ø3/8" x 3500mm With 1Tcg And 1Trf With Male Quick Coupling	2
2	5528010266-0	Hydraulic System Without Marker 4000 and 4500	1

• Complete Hitch Drawbar

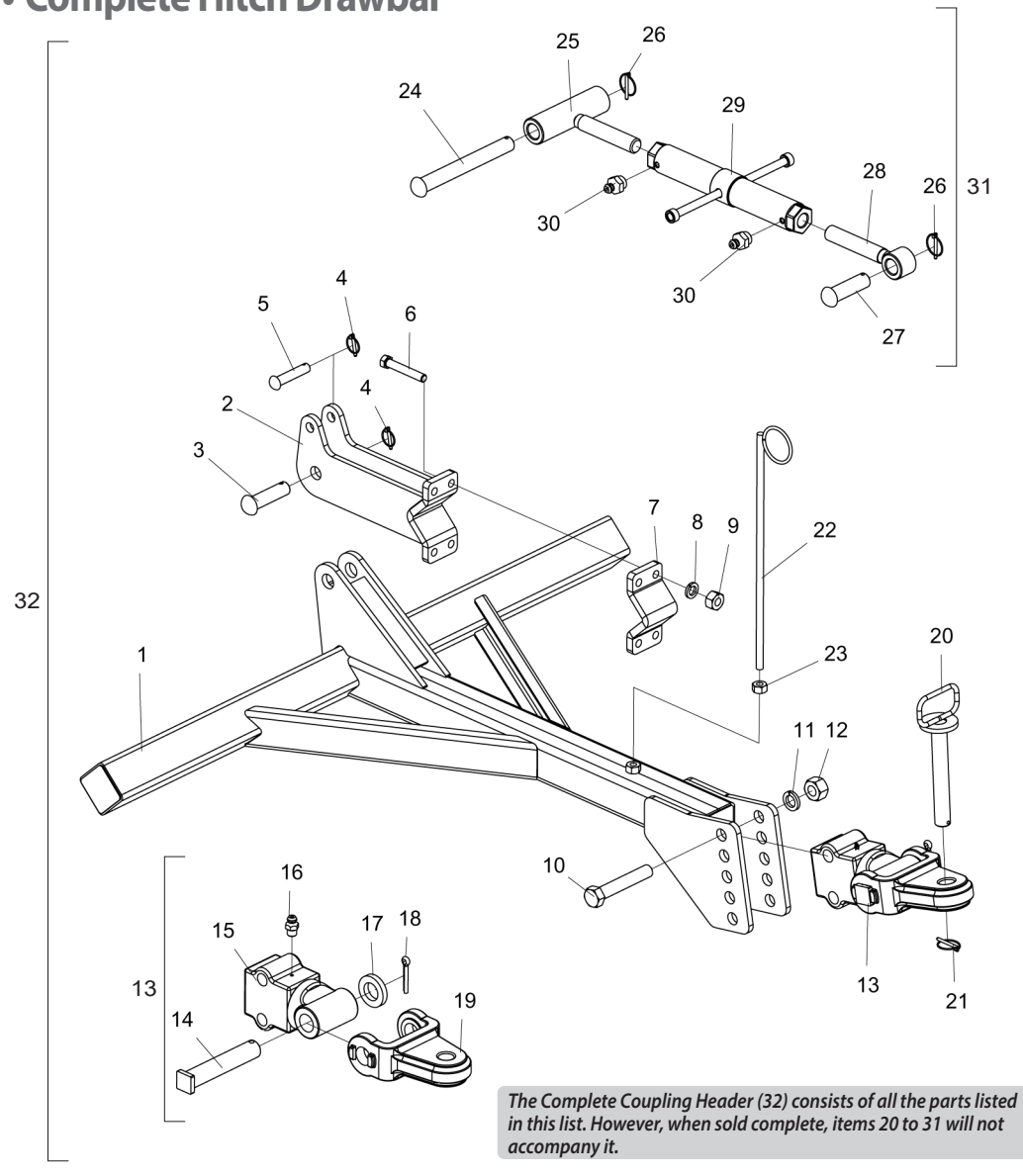

The Complete Coupling Header (32) consists of all the parts listed in this list. However, when sold complete, items 20 to 31 will not accompany it.

Item	Code	Product Description	All
1	5084010155-7	Coupling Header	1
2	5530012366-9	Hitch bracket	2
2	5530019817-0	Hitch Bracket - **For Third Tank**	2
3	6020310659-1	French Cab.Pin Ø28 X 95mm	2
4	6020390301-7	Lock W/Ring Ø5.75 X 50mm	4
5	5432120028-4	French Cab.Pin Ø3/4" X 86mm	2
6	6020311080-7	Hex Head Screw 5/8" X 4" 11F Unc1A Gr5 Rp	8
7	5530012365-0	Hitch bracket	2
8	6020010412-1	Pressure Washer 5/8" Medium Industrial	8
9	6020310760-1	Hex Nut 5/8" 11F Unc Gr5 Ch.1.1/16" Height.15,00mm	8
10	6020311137-4	Hex Head Screw 1" X 6" 8F Unc1A Gr5 Rt - **For Third Tank**	2
10	6020311139-0	Hex Head Screw 1" X 6.1/2" 8F UNC1A GR5 Rp	2
11	6020010420-2	1" Medium Industrial Pressure Washer	2
12	6020310778-4	Hex Nut 1" 8F Unc Gr5 Ch.1.5/8" Height.25,00mm	2
13	5332010055-7	Full Engagement Shackle	1
14	5432040003-4	Square Cab.Pin Ø37.5 X 190mm	1
15	5332010054-9	Engagement Knob	1
16	6020130100-1	Grease Nipple 1/4" Straight Unf - 28F Height.14mm Sext 5/16"	1
17	5024010217-7	Flat washer of Ø39 x Ø68 x 12,00mm	1
18	6020050122-8	Cotter Pin 3/8" x 2.1/2" (White Zinc Plated)	1
19	6010600995-6	Jelo "U" Type Support	1
20	5432010025-1	Pin w/handle Ø1.1/4" x 215mm	1
21	6020390301-7	Lock W/Ring Ø5.75 X 50mm	1
22	5530060020-3	Hose support	1
23	6020310760-1	Hex Nut 5/8" 11F Unc Gr5 Ch.1.1/16" Height.15,00mm	1
24	5432010306-4	French Cab.Pin Ø30.53 X 268mm	1
25	5484010103-0	Regulator w/Left Thread	1
26	6020390301-7	Lock W/Ring Ø5.75 X 50mm	2
27	5432120090-0	French Cab.Pin Ø30.53 X 97mm	1
28	5484040003-7	R.1.1/4"Unc X 197mm Regulator W/bushing	1
29	5484010014-9	Header Regulator	1
30	6020130108-7	Grease Nipple 1/8" Straight Bsp-28F	2
31	5484010102-1	Complete Regulator	1
32	5084010398-3	Full Hitch Header - **For Third Tank**	1
32	5084010156-5	Full hitch header	1

• Planting Lines

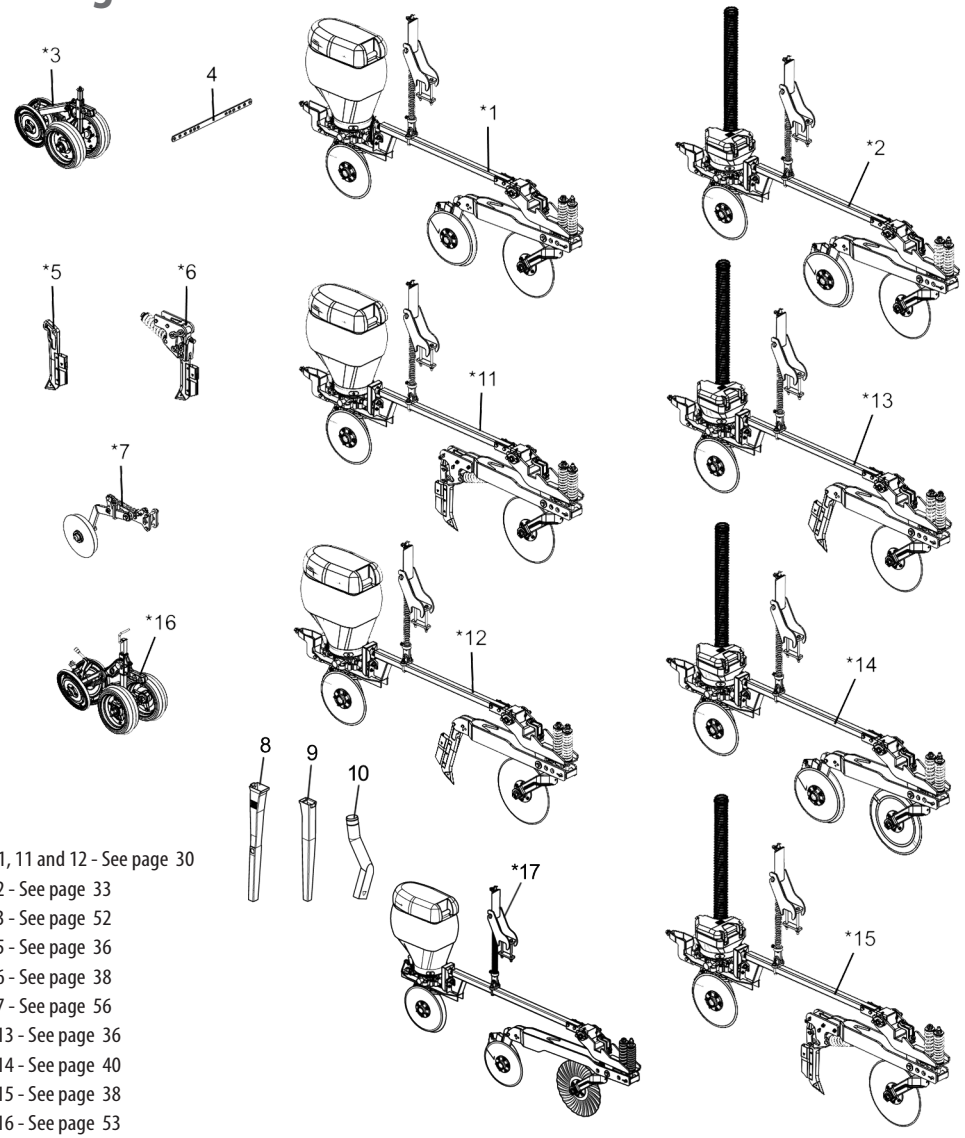

* Itens 1, 11 and 12 - See page 30
* Item 2 - See page 33
* Item 3 - See page 52
* Item 5 - See page 36
* Item 6 - See page 38
* Item 7 - See page 56
* Item 13 - See page 36
* Item 14 - See page 40
* Item 15 - See page 38
* Item 16 - See page 53
* Item 17 - See page 57

Item	Code	Product description	All
*1	2517011431-3	Right Small Row Unit W/Double Disc Of Fertilizer (Spe)	1
*1	2517011430-5	Left Large Row Unit W/Double Disc Of Fertilizer (Spe)	1
*1	2517011794-0	Left Small Row Unit W/Double Disc Of Fertilizer(Spe)	1
*2	2517012651-6	Smal Line Right W/Disc Double Fertilizer (Spe) - 3rd Deposit	1
*2	2517012660-5	Smal Line Left W/Disc Double Fertilizer (Spe) - 3rd Deposit	1
*2	2517012652-4	Larger Line Left W/Disc Double Fertilizer (Spe) - 3rd Deposit	1
*3	5124010050-2	Row Of Depth Wheel And Wheel Type "V" (Excentric)	1
4	5558010318-8	Small Lock Of Row	1
4	5558070050-0	Large Lock Of Row	1
*5	5532010227-7	Complete Furrower	1
*6	5532010246-3	Automatic Disarm And Reset Furrower	1
*7	5498010158-7	Right Wheel Cover Groove (Spe)	1
*7	5498010159-5	Left Wheel Cover Groove (Spe)	1
8	6020030726-0	Universal Seed Funnel With Hole For Sensor (413mm)	1
9	6020030727-8	Universal Seed Funnel (440mm)	1
10	6020030796-0	Round Spout with Right Degree (Smallest)	1
10	6020030797-9	Round Spout with Left Degree (Smaller)	1
		Optional	
*11	2517011432-1	Right Small Row Unit W/Disarm/Reset (Spe)	1
*11	2517011433-0	Left Large Row Unit W/Disarm/Reset (Spe)	1
*12	2517011435-6	Right Small Row Unit C/S (Spe)	1
*12	2517011434-8	Left Large Row Unit C/S (Spe)	1
*13	2517012653-2	Smal Right Line with Furrower (Spe) - 3rd Deposit	1
*13	2517012654-0	Larger Left Line with Furrower (Spe) - 3rd Deposit	1
*14	2517012657-5	Small Right Line with Furrower Disarming/Resetting (Spe) - 3rd Deposit	1
*14	2517012658-3	Larger Left Line with Furrower Disarming/Resetting (Spe) - 3rd Deposit	1
*15	2517012663-0	Small Right Line W/Double Fertilizer Disc W/Ribbed Cut Disc (Spe) - 3rd Deposit	1
*15	2517012664-8	Larger left Line W/Double Fertilizer Disc W/Ribbed Cut Disc (Spe) - 3rd Deposit	1
*16	5124010557-1	Row Of Oscilating Depth Wheel And Compactation Wheel Type "V"	1
*17	2517012670-2	Larger Left Line with Double Fertilizer Disc (SPE) and with 18"Turbo Cutting Disc	1
*17	2517012669-9	Small Right Line with Double Fertilizer Disc (SPE) and with 18"Turbo Cutting Disc	1

BALDAN

• Line Larger/Smaller of Planting

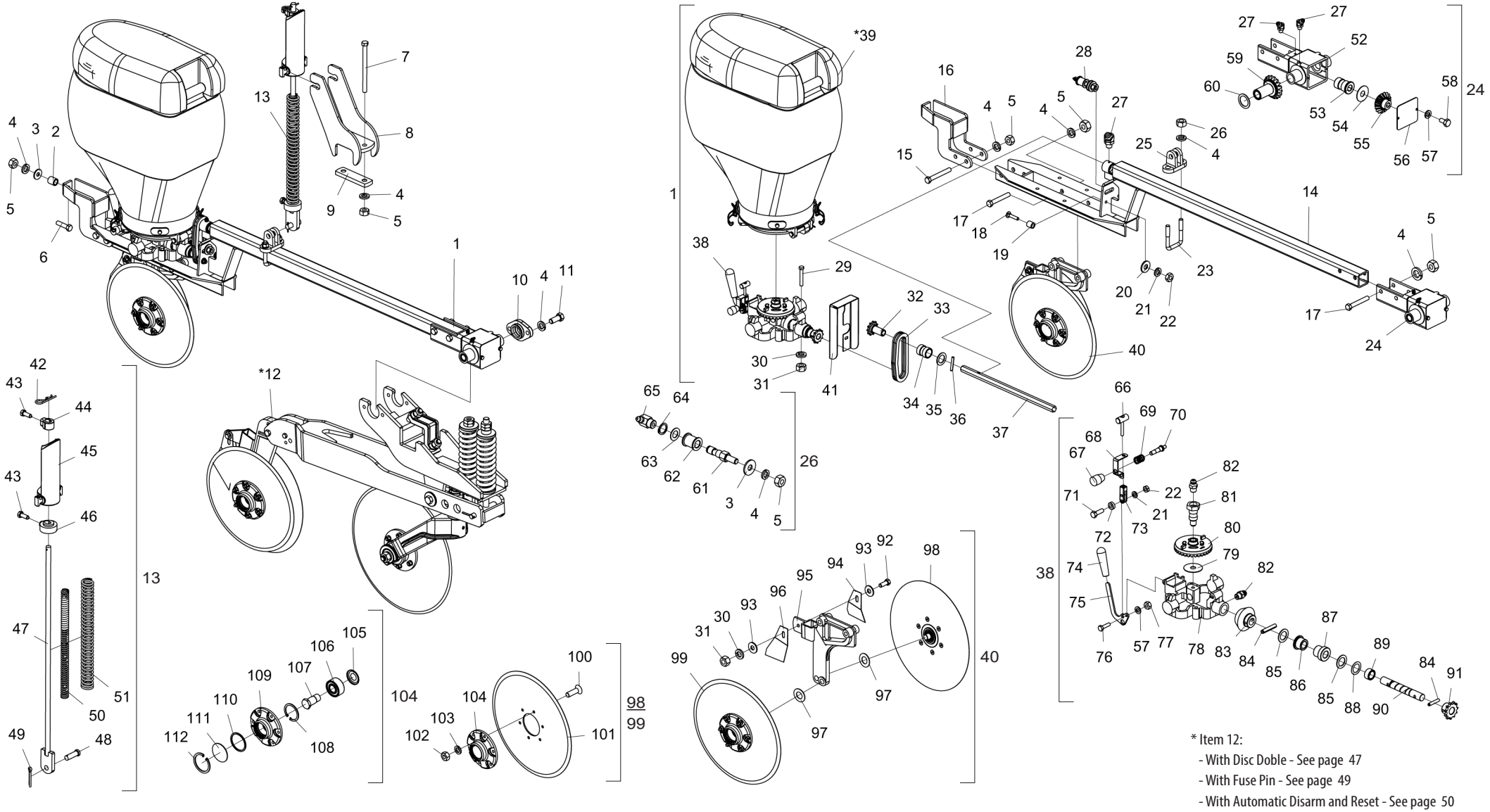

* Item 12:
- With Disc Doble - See page 47
- With Fuse Pin - See page 49
- With Automatic Disarm and Reset - See page 50

* Item 39 - See page 46

• Table Line Larger/Smaller of Planting

Item	Code	Product description	All	Lower right w/double fertilizer disc	Larger left with double fertilizer disc	Lower left with double fertilizer disc	Smallest right with furrower	Larger left with furrower	Lower right w/disarming/resetting furrower	Larger left with disarm/reset furrower
1	5124010512-1	Right Row Of Seed		1			1		1	
1	5124010508-3	Left Row Of Seed			1			1		1
1	5124010690-0	Small Left Row Of Seed				1				
2	5080020159-1	Bushing Of Ø13 X Ø19 X 21mm	1							
3	5024010068-9	Smooth Washer Ø13,3 X Ø35,5 X 3,00mm	3							
4	6020010410-5	Pressure Washer 1/2" Media Industry		16	14	16	16	17	16	14
5	6020310754-7	Hexagonal Nut 1/2" 12F W Gr5 Ch.7/8" Height 12,00mm		10	8	10	10	8	10	8
6	6020310049-6	Hexagonal Head Bolt 1/2" X 2" 12F W Gr5 Rp	1							
7	6020310204-9	Hexagonal Head Bolt 1/2" X 7" 12F W Gr5 Rp	2							
8	5530012361-8	Support Of Spring Rod	1							
9	5136013228-9	Support Plate	1							
10	5080010855-9	Row Support Fixation Bushing	2							
11	6020310051-8	Hexagonal Head Bolt 1/2" X 1.1/4" 12F W Gr5 Rt	4							
*12	5124010514-8	Complete Small Left Row Of Fertilzer (Double Disc)		1						
*12	5124010506-7	Complete Large Right Row Of Fertilizer (Double Disc)			1					
*12	5124010689-6	Complete Small Right Row Of Fertilzer (Double Disc)				1				
*12	5124010530-0	Small Row With Complete Forrower (Special Pin)					1			
*12	5124010531-8	Large Row With Complete Furrower (Special Pin)						1		
*12	5124010609-8	Small Row With Complete Forrower (Disarm/Reset)							1	
*12	5124010610-1	Large Row With Disarm/Reset Complete Furrower								1
13	5566010181-0	Complete Spring Rod	1							
14	5530012359-6	Support Of Small Seed Row		1		1	1		1	
14	5530012338-3	Support Of Large Seed Row			1			1		1
15	6020311065-3	Hexagonal Head Bolt 1/2" X 4" 12F W Gr5 Rp		2		2	2		2	
16	5530012369-3	Complete Support Of Row Of Rows		1		1	1		1	
17	6020311061-0	Hexagonal Head Bolt 1/2" X 3.1/2" 12F W Gr5 Rp	4							
18	6020311168-4	French Head Bolt 5/16" X 1.1/2" 18F Unc1A Gr2 Rp	2							
19	5080010845-1	Bushing Of Ø10,3 X Ø5/8" X 16mm(Galvanised)	2							
20	5024010073-5	Smooth Washer Ø8,5 X Ø20 X 2,00mm	2							
21	6020010404-0	Pressure Washer 5/16" Media Industry	3							
22	6020310744-0	Hexagonal Nut 5/16" 18F Unc Gr5 Ch.1/2" Height 6,50mm	3							
23	5068010081-8	Clamp Of 84 X 64 X R.1/2" W	1							
24	5092010526-0	Gear Box(Speed Box)	1							
25	6010601172-1	Lower Support Of Rod (Small)	1							
26	6020310756-3	Hexagonal Nut 1/2" 12F W Gr5 Ch.3/4" Height 11,00mm	2							
27	6020130104-4	Grease Fitting 1/4"	3							

Item	Code	Product description	All	Lower right w/double fertilizer disc	Larger left with double fertilizer disc	Lower left with double fertilizer disc	Smallest right with furrower	Larger left with furrower	Lower right w/disarming/resetting furrower	Larger left with disarm/reset furrower
28	5268010741-6	Complete Small Chain Stretcher	1							
29	6020311037-8	Hexagonal Head Bolt 3/8" X 2.1/2" 16F Unc1A Gr2 Rp	4							
30	6020010406-7	Pressure Washer 3/8" Media Industry	5							
31	6020310746-6	Hexagonal Nut 3/8" 16F Unc Gr5 Ch.9/16" Height 8,50mm	5							
32	5428010038-5	Pinion Of 11 Teeth	1							
33	6020050318-2	Chain (Asa 40) 29 Links + Amendment	1							
34	5080010854-0	Bushing Of Ø22 X Ø28 X 32mm	1							
35	5024010502-8	Pinion Washer	1							
36	6020310501-3	Heavy Elastic Pin Ø5 X 32mm	1							
37	5232011115-3	Hexagonal Shaft 1/2" X 1280mm		1		1	1		1	
37	5232011098-0	Hexagonal Shaft 1/2" X 1480mm			1			1		1
38	5044010206-6	Base Of The Seed Distributor	1							
38	5044010465-4	Seed Distributor Base - From 11/2022	1							
*39	5092010342-9	Seed Hopper 45 Litros Complete(Red Ral-3020) Universal System	1							
40	5124010510-5	Right Row Of Seed Double Disc (15")		1			1		1	
40	5124010507-5	Left Row Of Seed Double Disc (15")			1	1		1		1
41	5106010132-2	Chain Cover	1							
42	6020390294-0	Lock Nma - Type "R" Ø3,5 X 67mm(Special)	1							
43	6020310349-5	Hexagonal Head Bolt M12 X 1,75 X 30mm Cl8.8 R Wth Point	2							
44	5080011663-2	Fixation Support Of Spring Rod	1							
45	6010601285-0	Support Of Spring Rod	1							
46	5530016364-4	Lower Support Of Triple Spring	1							
47	5566010183-6	Rod Spring	1							
48	6020310593-5	Pin Ø5/8" X 46mm	1							
49	6020050101-5	Cotterpin 1/8" X 1"	1							
50	6020250297-3	Helical Spring Ø17,5 X Ø25,5 X 400mm Internal	1							
51	6020250298-1	Helical Spring Ø30,5 X Ø41,5 X 400mm	1							
52	5092010337-2	Gear Left Box	1							
53	5080010853-2	Bushing Of Ø1.1/8" X 38mm W/Hexagonal Hole For Shaft De 1/2"	1							
54	5024010051-4	Smooth Washer Ø16 X Ø44 X 1,21mm	1							
55	5428010037-7	Pinion Of 16 Teeth	1							
56	5538014695-8	Gear Box Cover	1							
57	6020010402-4	Pressure Washer 1/4" Media Industry	3							
58	6020311000-9	Hexagonal Head Bolt 1/4" X 1/2" 20F Unc1A Gr5 Rt	2							
59	5428010044-0	Pinion Of 18 Teeth With Bronze Bushing Ø28,4mm	1							
60	5024010057-3	Smooth Washer Ø29,5 X Ø41 X 1,21mm	1							

• Table Line Larger/Smaller of Planting

Item	Code	Product description	All	Lower right w/double fertilizer disc	Larger left with double fertilizer disc	Lower left with double fertilizer disc	Smallest right with furrower	Larger left with furrower	Lower right w/disarming/resetting furrower	Larger left with disarm/reset furrower
61	5232011116-1	Small Stretcher Shaft	1							
62	5506010033-0	Roller Of Stretcher	1							
63	5024010059-0	Smooth Washer Ø16,5 X Ø29 X 1,21mm	1							
64	6020010252-8	Retaining Oring	1							
65	6020130112-5	Grease Fitting 1/8"	1							
66	5432010450-8	Lock Pin	1							
67	6020430203-3	Handle Pma 330 Thread 3/8" X 16 Fios	1							
68	5530014927-7	Support Of Spring	1							
69	6020250577-8	Helical Spring Ø12,5 X Ø16,5 X 19mm	1							
70	5432010449-4	Lock Pin Of Hopper	1							
71	6020310038-0	Hexagonal Head Bolt 5/16" X 1" 18F Unc1A Gr5 Rt	1							
72	5080010408-1	Articulation Bushing Of Lock	1							
73	5530014935-8	Adjustment Support Of Lock	1							
74	6020050724-2	Rubber Cable	1							
75	5008010234-5	Lock Handle Of Seed Distributor Base	1							
76	6020310019-4	Hexagonal Head Bolt 1/4" X 1" 20F Unc1A Gr2 Rt	1							
77	6020310742-3	Hexagonal Nut 1/4" 20F Unc Gr5 Ch.7/16" Height 5,50mm	1							
78	5530014540-9	Support Of Seed Distributor Base	1							
78	55300184285	Seed Distributor Base Support - From 11/2022	1							
79	6020010427-0	Plain Washer Ø14 X Ø50 X 1,21mm	1							
80	5164010009-9	Crown Of 33 Teeths	1							
80	51640100226	Crown Of 33 Teeths	1							
81	5232010521-8	Shaft Of Crown And Pinion Fixation	1							
82	6020130100-1	Grease Fitting 1/4"	2							
83	5428010017-2	Pinion Of 15 Teeth	1							
83	54280100555	Pinion 15 Teeths	1							
84	6020310488-2	Heavy Elastic Pin Ø6 X 32mm	2							
85	5024010160-0	Smooth Washer Ø20 X Ø31 X 1,21mm	2							
86	5080011049-9	Small Bronze Bushing	1							
86	50800122012	Smaller Bronze Bushing - From 11/2022	1							
87	5080011050-2	Large Bronze Bushing	1							
87	50800122020	Larger Bronze Bushing - From 11/2022	1							
88	6020010452-0	Plain Washer Ø20 X Ø30 X 0,5mm	1							
89	5080020856-1	Bushing Ø20 X Ø28 X 15mm	1							
90	5232011304-0	Transmission Shaft	1							

Item	Code	Product description	All	Lower right w/double fertilizer disc	Larger left with double fertilizer disc	Lower left with double fertilizer disc	Smallest right with furrower	Larger left with furrower	Lower right w/disarming/resetting furrower	Larger left with disarm/reset furrower
90	52320125200	Transmission Shaft - From 11/2022	1							
91	5428020016-9	Pinion Of 11 Teeth	1							
92	6020310054-2	Hexagonal Head Bolt 3/8" X 1" 16F Unc1A Gr2 Rt	1							
93	5024010075-1	Smooth Washer Ø10,3 X Ø25 X 2,00mm	2							
94	5352030048-8	Left Scraper Of Discs	1							
95	5530011791-0	Right Seed Double Disc Support		1			1		1	
95	5530011790-1	Support Of Left Seed Double Disc			1	1		1		1
96	5352030047-0	Right Scraper Of Discs	1							
97	5024010024-7	Smooth Washer Ø20 X Ø38 X 1,21mm	4							
98	5204010459-3	Complete Left Hub (Plain Disc 15" X 4,00mm)	1							
99	5204010458-5	Complete Right Hub (Coulter Disc Blade 15" X 4,00mm)	1							
100	6020317573-9	Allen Bolt M8 X 1,25 X 25mm Cl12.9 RT	12							
101	2857397276-9	Coulter Plain Disc Blade 15 X 4,00 Hc Rd 80mm + 6H Rd 8,7mm D=115mm Single Bevel	2							
102	6020310454-8	Hexagonal Nut M8 X 1,25 Ma Cl8 Ch.13mm H.6,50mm	12							
103	6020010004-5	Pressure Washer M8 Media	12							
104	5204010451-8	Right Disc Hub	1							
104	5204010452-6	Left Disc Hub	1							
105	6020056005-4	Dual Ball Races Bearing Cap 5204Kp52-Sp6 (1ºline)	2							
106	6020350933-5	Sphere Bearing Double Row 5204Kp52-Sp6(1º Line)	2							
107	5420010098-3	Hexagonal Head Bolt 3/4" X 1.7/8" 16F Unf 1A Gr5 Rp - Read Right (Special)	1							
107	5420010099-1	Hexagonal Head Bolt 3/4" X 1.7/8" 16F Unf 1A Gr5 Rp - Read Left (Special)	1							
108	6020011053-9	Retaining Ring I-047	2							
109	5204010453-4	Hub Of Ø136 X 41mm	2							
110	6020010095-9	Gascket Ring 047X 052X 2mm	2							
111	5096010050-3	Hub Cap	2							
112	6020010289-7	Retaining Ring I-55	2							

• Line with Double Disc Fertilizer for 3rd Deposit

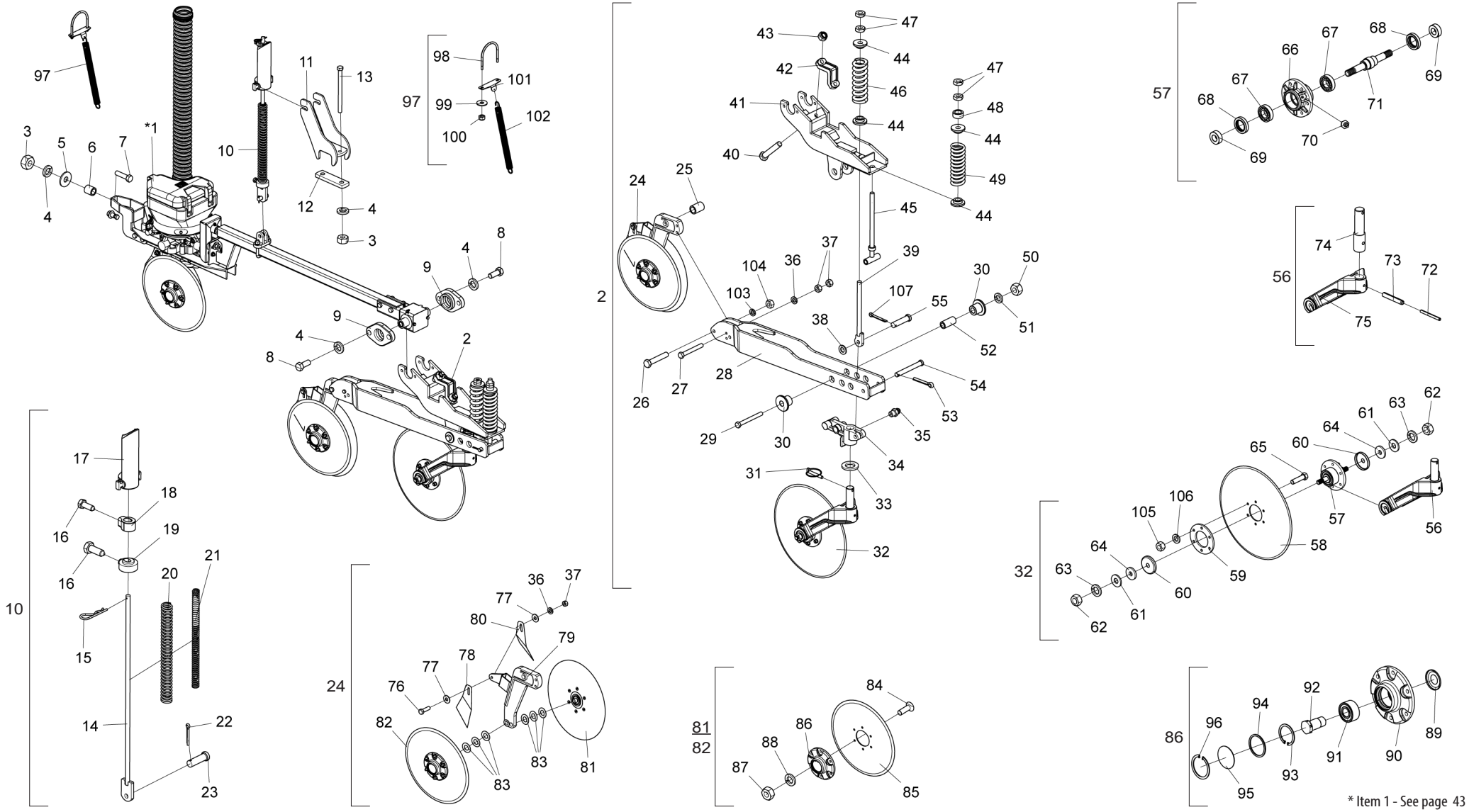

* Item 1 - See page 43

BALDAN

• Table Line with Double Disc Fertilizer for 3rd Deposit

Item	Code	Product description	All	Smaller Rigth	Smaller Left	Larger Left
*1	5124018093-0	Row of Seed 3rd Deposit Right		1		
*1	5124018095-6	Row of seed Lower Left For 3rd Deposit			1	
*1	5124018094-8	Row of Seed 3rd Deposit Left				1
2	5124010514-8	Complete Small Left Row Of Fertilzer (Double Disc)		1		
2	5124010689-6	Complete Small Right Row Of Fertilzer (Double Disc)			1	
2	5124010506-7	Complete Large Right Row Of Fertilizer (Double Disc)				1
3	6020310754-7	Hexagonal Nut 1/2" 12F W Gr5 Ch.7/8" Height 12,00mm	3			
4	6020010410-5	Pressure Washer 1/2" Media Industry	7			
5	5024010068-9	Smooth Washer Ø13,3 X Ø35,5 X 3,00mm	1			
6	5080020159-1	Bushing Of Ø13 X Ø19 X 21mm	1			
7	6020310049-6	Hexagonal Head Bolt 1/2" X 2" 12F W Gr5 Rp	1			
8	6020310051-8	Hexagonal Head Bolt 1/2" X 1.1/4" 12F W Gr5 Rt	4			
9	5080010855-9	Row Support Fixation Bushing	2			
10	5566010181-0	Complete Spring Rod	1			
11	5530012361-8	Support Of Spring Rod	1			
12	5136013228-9	Support Plate	1			
13	6020310204-9	Hexagonal Head Bolt 1/2" X 7" 12F W Gr5 Rp	2			
14	5566010183-6	Rod Spring	1			
15	6020390294-0	Lock Nma - Type "R" Ø3,5 X 67mm(Special)	1			
16	6020310349-5	Hexagonal Head Bolt M12 X 1,75 X 30mm Cl8.8 R Wth Point	2			
17	6010601285-0	Support Of Spring Rod	1			
18	5080011663-2	Fixation Support Of Spring Rod	1			
19	5530016364-4	Lower Support Of Triple Spring	1			
20	6020250298-1	Helical Spring Ø30,5 X Ø41,5 X 400mm	1			
21	6020250297-3	Helical Spring Ø17,5 X Ø25,5 X 400mm Internal	1			
22	6020050101-5	Cotterpin 1/8" X 1"	1			
23	6020310593-5	Pin Ø5/8" X 46mm	1			
24	5124010870-8	Left fertilizer Double Disc Row (15")		1		
24	5124010869-4	Right fertilizer Double Disc Row (15")			1	1
25	5080010016-7	Articulation Bushing	1			
26	6020311058-0	Hexagonal Head Bolt 1/2" X 2.3/4" 12F W Gr5 Rp	1			
27	6020311253-2	Hexagonal Head Bolt 3/8" X 3" 16F Unc1A Gr5 Rt	1			
28	5072011620-8	Furrower Large Arm Of Double Disc		1	1	
28	5072011621-6	Furrower Large Arm Of Double Disc				1
29	6020311083-1	Hexagonal Head Bolt 5/8" X 6" 11F Unc1A Gr5 Rp	1			
30	5080011179-7	Bushing Of Ø16,5 X Ø2" X 31,5mm	2			
31	6020390292-4	Lock Ø8 X 54mm	1			
32	5124010589-0	Coulter Disc (Plain Disc Blade 18" X 5mm)	1			
33	5024010227-4	Smooth Washer Ø36 X Ø61 X 6,30mm	1			
34	5530012355-3	Support Of Coulter Disc		1	1	
34	5530012400-2	Support Of Coulter Disc				1
35	6020130100-1	Grease Fitting 1/4"	1			
36	6020010406-7	Pressure Washer 3/8" Media Industry	8			

Item	Code	Product description	All	Smaller Rigth	Smaller Left	Larger Left
37	6020310746-6	Hexagonal Nut 3/8" 16F Unc Gr5 Ch.9/16" Height 8,50mm	9			
38	5024010154-5	Smooth Washer Ø16 X Ø29 X 3,00mm	1			
39	5566010129-1	Rod Coulter Disc	1			
40	6020317420-1	Hexagonal Head Bolt M16 X 2,00 X 90mm Cl8.8 Rp	2			
41	5530014930-7	Support Of Row	1			
42	6010601965-0	Fixation Clamp	1			
43	6020317443-0	Self-Locking Nut With Nylon M16 X 2,00 Ma Cl8 Ch.24mm H.16,00mm	2			
44	6010600980-8	Back Bushing	4			
45	5566010184-4	Rod Spring	1			
46	6020250326-0	Helical Spring Ø42,2 X Ø70 X 200mm	1			
47	6020310784-9	Hexagonal Nut 3/4" 10F Unc Gr5 Ch.1.1/4" Height 11,00mm	4			
48	5080010831-1	Bushing Of Ø20 X Ø32 X 15mm	1			
49	6020250222-1	Helical Spring Ø43 X Ø67 X 200mm	1			
50	6020310760-1	Hexagonal Nut 5/8" 11F Unc Gr5 Ch.1.1/16" Height 15,00mm	1			
51	6020010412-1	Pressure Washer 5/8" Media Industry	1			
52	5080010614-9	Bushing Of Ø16,2 X Ø26,5 X 59mm	1			
53	6020050106-6	Cotterpin 3/16" X 1.1/2"	1			
54	6020310529-3	Pin Ø5/8"X 123mm	1			
55	6020310463-7	Cylinder Head Pin Ø5/8" X 60mm	1			
56	5530014539-5	Complete Suppoert Of Coulter Disc	1			
57	5204020099-1	Complete Hub	1			
58	2861417388-4	Coulter Plain Disc Blade 18" X 4,75 Fc Rd 80mm + 6F Rd 10,3mm D=115mm Doble Bevel	1			
59	5284010001-4	Flange Of Disc Hub	1			
60	5096010028-7	Hub Cap	2			
61	5024010007-7	Smooth Washer Ø20,3 X Ø46,5 X 4,75mm	2			
62	6020311265-6	Hexagonal Nut M20 X 2,50 Ma Cl8 Ch.30mm H.16,00mm	2			
63	6020010403-2	Pressure Washer M20 Media	2			
64	5024010289-4	Smooth Washer Ø20 X Ø58 X 8,00mm	2			
65	6020311029-7	Hexagonal Head Bolt 3/8" X 1.1/2" 16F Unc1A Gr5 Rt	6			
66	5204010088-1	Disc Hub	1			
67	6020350007-9	Bearing 6206(Skf-Nsk-Timken)	2			
68	6020350201-2	Retainer Ø40,00 X Ø62,00 X 12,00mm	2			
69	5080020761-1	Bushing Of Ø19,1 X Ø40 X 15mm	2			
70	6020130108-7	Grease Fitting 1/8"	1			
71	5232012009-8	Shaft M20 X 186mm	1			
72	6020310478-5	Heavy Elastic Pin Ø6 X 60mm	1			
73	6020310486-6	Heavy Elastic Pin Ø10 X 60mm	1			
74	5232011113-7	Support Shaft	1			
75	5304010009-8	Fixation Fork Of Coulter Disc	1			
76	6020310026-7	Hexagonal Head Bolt 3/8" X 1.1/4" 16F Unc1A Gr5 Rt	1			
77	5024010075-1	Smooth Washer Ø10,3 X Ø25 X 2,00mm	2			
78	5352030057-7	Internal Right Scraper Of Disc	1			
79	5530012357-0	Support Of Left Fertilizer Double Disc		1		

• Table Line with Double Disc Fertilizer for 3rd Deposit

Item	Code	Product description	All	Smaller Rigth	Smaller Left	Larger Left
79	5530012339-1	Support Of Right Fertilizer Double Disc			1	1
80	5352030056-9	Internal Left Scraper Of Disc	1			
81	5204010459-3	Complete Left Hub (Plain Disc 15" X 4,00mm)	1			
82	5204010458-5	Complete Right Hub (Coulter Disc Blade 15" X 4,00mm)	1			
83	5024010024-7	Smooth Washer Ø20 X Ø38 X 1,21mm	6			
84	6020317573-9	Allen Bolt M8 X 1,25 X 25mm Cl12.9 RT	6			
85	2857397276-9	Coulter Plain Disc Blade 15 X 4,00 Hc Rd 80mm + 6H Rd 8,7mm D=115mm Single Bevel	1			
86	5204010451-8	Right Disc Hub	1			
86	5204010452-6	Left Disc Hub	1			
87	6020310454-8	Hexagonal Nut M8 X 1,25 Ma Cl8 Ch.13mm H.6,50mm	6			
88	6020010004-5	Pressure Washer M8 Media	6			
89	6020056005-4	Dual Ball Races Bearing Cap 5204Kp52-Sp6 (1°line)	1			
90	5204010453-4	Hub Of Ø136 X 41mm	1			
91	6020350933-5	Sphere Bearing Double Row 5204Kp52-Sp6(1° Line)	1			
92	5420010099-1	Hexagonal Head Bolt 3/4" X 1.7/8" 16F Unf 1A Gr5 Rp - Read Left (Special)	1			
92	5420010098-3	Hexagonal Head Bolt 3/4" X 1.7/8" 16F Unf 1A Gr5 Rp - Read Right (Special)	1			
93	6020011053-9	Retaining Ring I-047	1			
94	6020010095-9	Gascket Ring 047X 052X 2mm	1			
95	5096010050-3	Hub Cap	1			
96	6020010289-7	Retaining Ring I-55	1			
97	5530019701-8	CPL Larger Seed Conductor Holder	1			
98	5068010203-9	Special "U" Type Clamp M8 x 102.5 x 112mm	1			
99	6020010448-2	Flat Washer M8 Ø8,40XØ24,00X2,00mm	2			
100	6020317449-0	Low Self-Locking Hex Nut W/Nylon M8 X1.25 MA CL8 CH.13mm	2			
101	5530019702-6	Seed Conductor Support	1			
102	6020251880-2	Coil Spring Traction Ø27 x Ø3.00 x 352mm	1			

• Line with Furrower for 3rd Deposit

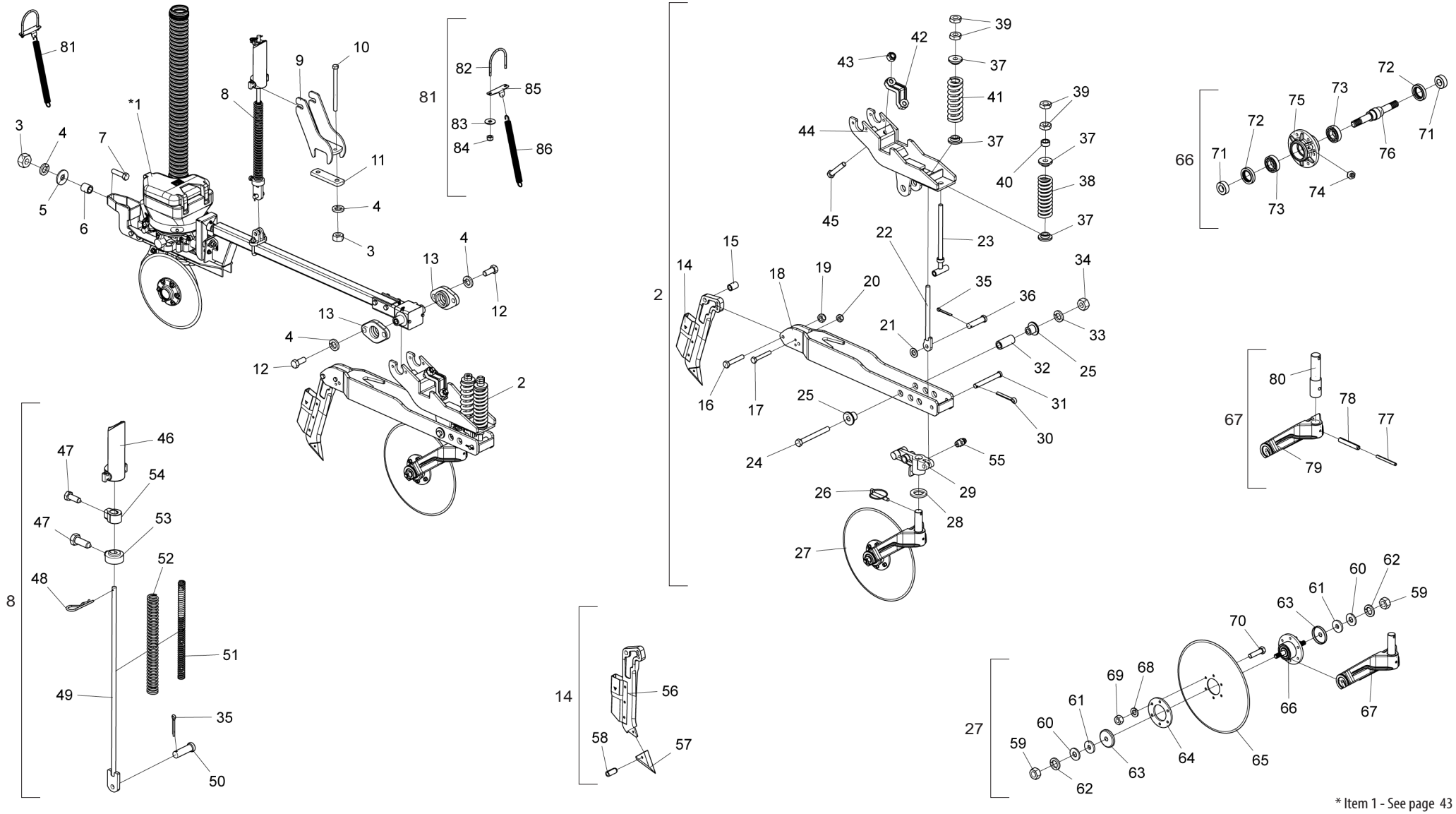

* Item 1 - See page 43

• Table Line with Furrower for 3rd Deposit

Item	Code	Product description	All	Smaller Right	Larger Left
*1	5124018093-0	Row of Seed 3rd Deposit Right		1	
*1	5124018094-8	Row of Seed 3rd Deposit Left			1
2	5124010530-0	Small Row With Complete Forrower (Special Pin)		1	
2	5124010531-8	Large Row With Complete Furrower (Special Pin)			1
3	6020310754-7	Hexagonal Nut 1/2" 12F W Gr5 Ch.7/8" Height 12,00mm	3		
4	6020010410-5	Pressure Washer 1/2" Media Industry	7		
5	5024010068-9	Smooth Washer Ø13,3 X Ø35,5 X 3,00mm	1		
6	5080020159-1	Bushing Of Ø13 X Ø19 X 21mm	1		
7	6020310049-6	Hexagonal Head Bolt 1/2" X 2" 12F W Gr5 Rp	1		
8	5566010181-0	Complete Spring Rod	1		
9	5530012361-8	Support Of Spring Rod	1		
10	6020310204-9	Hexagonal Head Bolt 1/2" X 7" 12F W Gr5 Rp	2		
11	5136013228-9	Support Plate	1		
12	6020310051-8	Hexagonal Head Bolt 1/2" X 1.1/4" 12F W Gr5 Rt	4		
13	5080010855-9	Row Support Fixation Bushing	2		
14	5532010227-7	Complete Furrower	1		
15	5080010016-7	Articulation Bushing	1		
16	6020310978-7	Hexagonal Head Bolt M12 X 1,75 X 70mm Cl8.8 Rt	1		
17	6020317444-9	Hexagonal Head Bolt M10 X 1,50 X 70mm Cl8.8 Rt	1		
18	5072011620-8	Furrower Large Arm Of Double Disc		1	
18	5072011621-6	Furrower Large Arm Of Double Disc			1
19	6020310847-0	Self-Locking Nut With Nylon M12 X 1 ,75 Ma Cl8 Ch.19mm H.12,00mm	1		
20	6020317435-0	Self-Locking Nut With Nylon M10 X 1,50 Ma Cl8 Ch.17mm H.10,00mm	1		
21	5024010154-5	Smooth Washer Ø16 X Ø29 X 3,00mm	1		
22	5566010129-1	Rod Coulter Disc	1		
23	5566010184-4	Rod Spring	1		
24	6020311083-1	Hexagonal Head Bolt 5/8" X 6" 11F Unc1A Gr5 Rp	1		
25	5080011179-7	Bushing Of Ø16,5 X Ø2" X 31,5mm	2		
26	6020390292-4	Lock Ø8 X 54mm	1		
27	5124010589-0	Coulter Disc (Plain Disc Blade 18" X 5mm)	1		
28	5024010227-4	Smooth Washer Ø36 X Ø61 X 6,30mm	1		
29	5530012355-3	Support Of Coulter Disc		1	
29	5530012400-2	Support Of Coulter Disc			1
30	6020050106-6	Cotterpin 3/16" X 1.1/2"	1		
31	6020310529-3	Pin Ø5/8"X 123mm	1		
32	5080010614-9	Bushing Of Ø16,2 X Ø26,5 X 59mm	1		
33	6020010412-1	Pressure Washer 5/8" Media Industry	1		
34	6020310760-1	Hexagonal Nut 5/8" 11F Unc Gr5 Ch.1.1/16" Height 15,00mm	1		
35	6020050101-5	Cotterpin 1/8" X 1"	2		
36	6020310463-7	Cylinder Head Pin Ø5/8" X 60mm	1		
37	6010600980-8	Back Bushing	4		
38	6020250222-1	Helical Spring Ø43 X Ø67 X 200mm	1		
39	6020310784-9	Hexagonal Nut 3/4" 10F Unc Gr5 Ch.1.1/4" Height 11,00mm	4		
40	5080010831-1	Bushing Of Ø20 X Ø32 X 15mm	1		
41	6020250326-0	Helical Spring Ø42,2 X Ø70 X 200mm	1		

Item	Code	Product description	All	Smaller Right	Larger Left
42	6010601965-0	Fixation Clamp	1		
43	6020317443-0	Self-Locking Nut With Nylon M16 X 2,00 Ma Cl8 Ch.24mm H.16,00mm	2		
44	5530014930-7	Support Of Row	1		
45	6020317420-1	Hexagonal Head Bolt M16 X 2,00 X 90mm Cl8.8 Rp	2		
46	6010601285-0	Support Of Spring Rod	1		
47	6020310349-5	Hexagonal Head Bolt M12 X 1,75 X 30mm Cl8.8 R Wth Point	2		
48	6020390294-0	Lock Nma - Type "R" Ø3,5 X 67mm(Special)	1		
49	5566010183-6	Rod Spring	1		
50	6020310593-5	Pin Ø5/8" X 46mm	1		
51	6020250297-3	Helical Spring Ø17,5 X Ø25,5 X 400mm Internal	1		
52	6020250298-1	Helical Spring Ø30,5 X Ø41,5 X 400mm	1		
53	5530016364-4	Lower Support Of Triple Spring	1		
54	5080011663-2	Fixation Support Of Spring Rod	1		
55	6020130100-1	Grease Fitting 1/4"	1		
56	5532010226-9	Furrower Of Fertilizer	1		
57	6010602800-4	Point Of The Furrower	1		
58	6020310493-9	Heavy Elastic Pin Ø8 X 18mm	1		
59	6020311265-6	Hexagonal Nut M20 X 2,50 Ma Cl8 Ch.30mm H.16,00mm	2		
60	5024010007-7	Smooth Washer Ø20,3 X Ø46,5 X 4,75mm	2		
61	5024010289-4	Smooth Washer Ø20 X Ø58 X 8,00mm	2		
62	6020010403-2	Pressure Washer M20 Media	2		
63	5096010028-7	Hub Cap	2		
64	5284010001-4	Flange Of Disc Hub	1		
65	2861417388-4	Coulter Plain Disc Blade 18" X 4,75 Fc Rd 80mm + 6F Rd 10,3mm D=115mm Doble Bevel	1		
66	5204020099-1	Complete Hub	1		
67	5530014539-5	Complete Suppoert Of Coulter Disc	1		
68	6020010406-7	Pressure Washer 3/8" Media Industry	6		
69	6020310746-6	Hexagonal Nut 3/8" 16F Unc Gr5 Ch.9/16" Height 8,50mm	6		
70	6020311029-7	Hexagonal Head Bolt 3/8" X 1.1/2" 16F Unc1A Gr5 Rt	6		
71	5080020761-1	Bushing Of Ø19,1 X Ø40 X 15mm	2		
72	6020350201-2	Retainer Ø40,00 X Ø62,00 X 12,00mm	2		
73	6020350007-9	Bearing 6206(Skf-Nsk-Timken)	2		
74	6020130108-7	Grease Fitting 1/8"	1		
75	5204010088-1	Disc Hub	1		
76	5232012009-8	Shaft M20 X 186mm	1		
77	6020310478-5	Heavy Elastic Pin Ø6 X 60mm	1		
78	6020310486-6	Heavy Elastic Pin Ø10 X 60mm	1		
79	5304010009-8	Fixation Fork Of Coulter Disc	1		
80	5232011113-7	Support Shaft	1		
81	5530019701-8	CPL Larger Seed Conductor Holder	1		
82	5068010203-9	Special "U" Type Clamp M8 x 102.5 x 112mm	1		
83	6020010448-2	Flat Washer M8 Ø8,40XØ24,00X2,00mm	2		
84	6020317449-0	Low Self-Locking Hex Nut W/Nylon M8 X1.25 MA CL8 CH.13mm	2		
85	5530019702-6	Seed Conductor Support	1		
86	6020251880-2	Coil Spring Traction Ø27 x Ø3.00 x 352mm	1		

• Line with Disarm/Reset Furrower for 3rd Deposit

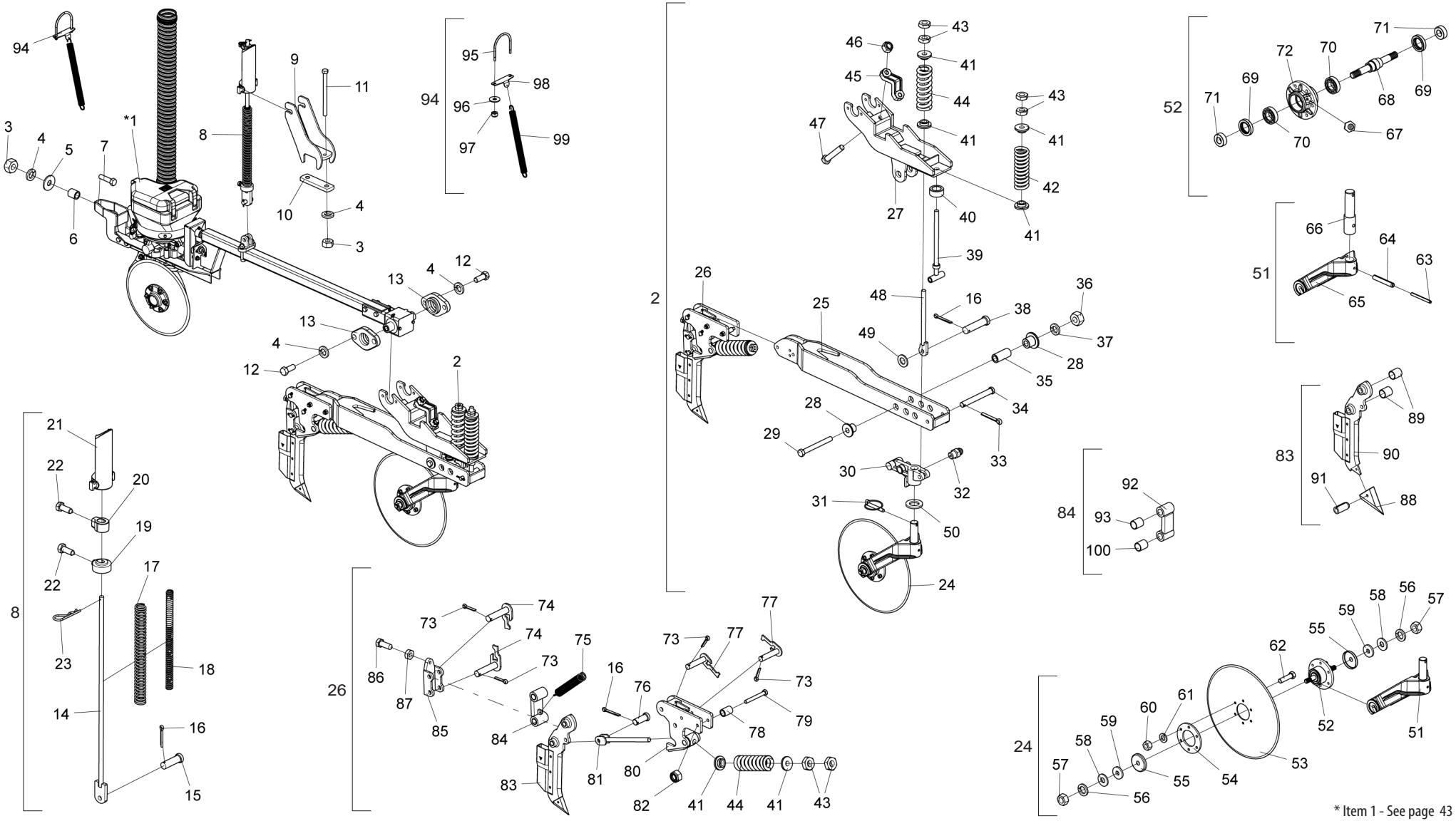

• Table Line with Disarm/Reset Furrower for 3rd Deposit

Item	Code	Product description	All	Smaller Right	Larger Left
*1	5124018093-0	Row of Seed 3rd Deposit Right		1	
*1	5124018094-8	Row of Seed 3rd Deposit Left			1
2	5124010609-8	Small Row With Complete Forrower (Disarm/Reset)		1	
2	5124010610-1	Large Row With Disarm/Reset Complete Furrower			1
3	6020310754-7	Hexagonal Nut 1/2" 12F W Gr5 Ch.7/8" Height 12,00mm	3		
4	6020010410-5	Pressure Washer 1/2" Media Industry	7		
5	5024010068-9	Smooth Washer Ø13,3 X Ø35,5 X 3,00mm	1		
6	5080020159-1	Bushing Of Ø13 X Ø19 X 21mm	1		
7	6020310049-6	Hexagonal Head Bolt 1/2" X 2" 12F W Gr5 Rp	1		
8	5566010181-0	Complete Spring Rod	1		
9	5530012361-8	Support Of Spring Rod	1		
10	5136013228-9	Support Plate	1		
11	6020310204-9	Hexagonal Head Bolt 1/2" X 7" 12F W Gr5 Rp	2		
12	6020310051-8	Hexagonal Head Bolt 1/2" X 1.1/4" 12F W Gr5 Rt	4		
13	5080010855-9	Row Support Fixation Bushing	2		
14	5566010183-6	Rod Spring	1		
15	6020310593-5	Pin Ø5/8" X 46mm	1		
16	6020050101-5	Cotterpin 1/8" X 1"	3		
17	6020250298-1	Helical Spring Ø30,5 X Ø41,5 X 400mm	1		
18	6020250297-3	Helical Spring Ø17,5 X Ø25,5 X 400mm Internal	1		
19	5530016364-4	Lower Support Of Triple Spring	1		
20	5080011663-2	Fixation Support Of Spring Rod	1		
21	6010601285-0	Support Of Spring Rod	1		
22	6020310349-5	Hexagonal Head Bolt M12 X 1,75 X 30mm Cl8.8 R Wth Point	2		
23	6020390294-0	Lock Nma - Type "R" Ø3,5 X 67mm(Special)	1		
24	5124010589-0	Coulter Disc (Plain Disc Blade 18" X 5mm)	1		
25	5072011620-8	Furrower Large Arm Of Double Disc		1	
25	5072011621-6	Furrower Large Arm Of Double Disc			1
26	5532010246-3	Automatic Disarm And Reset Furrower	1		
27	5530014930-7	Support Of Row	1		
28	5080011179-7	Bushing Of Ø16,5 X Ø2" X 31,5mm	2		
29	6020311083-1	Hexagonal Head Bolt 5/8" X 6" 11F Unc1A Gr5 Rp	1		
30	5530012355-3	Support Of Coulter Disc		1	
30	5530012400-2	Support Of Coulter Disc			1
31	6020390292-4	Lock Ø8 X 54mm	1		
32	6020130100-1	Grease Fitting 1/4"	1		
33	6020050106-6	Cotterpin 3/16" X 1.1/2"	1		
34	6020310529-3	Pin Ø5/8"X 123mm	1		
35	5080010614-9	Bushing Of Ø16,2 X Ø26,5 X 59mm	1		
36	6020310760-1	Hexagonal Nut 5/8" 11F Unc Gr5 Ch.1.1/16" Height 15,00mm	1		
37	6020010412-1	Pressure Washer 5/8" Media Industry	1		
38	6020310463-7	Cylinder Head Pin Ø5/8" X 60mm	1		
39	5566010184-4	Rod Spring	1		
40	5080010831-1	Bushing Of Ø20 X Ø32 X 15mm	1		
41	6010600980-8	Back Bushing	6		
42	6020250222-1	Helical Spring Ø43 X Ø67 X 200mm	1		
43	6020310784-9	Hexagonal Nut 3/4" 10F Unc Gr5 Ch.1.1/4" Height 11,00mm	6		
44	6020250326-0	Helical Spring Ø42,2 X Ø70 X 200mm	2		
45	6010601965-0	Fixation Clamp	1		
46	6020317443-0	Self-Locking Nut With Nylon M16 X 2,00 Ma Cl8 Ch.24mm H.16,00mm	2		
47	6020317420-1	Hexagonal Head Bolt M16 X 2,00 X 90mm Cl8.8 Rp	2		
48	5566010129-1	Rod Coulter Disc	1		

Item	Code	Product description	All	Smaller Right	Larger Left
49	5024010154-5	Smooth Washer Ø16 X Ø29 X 3,00mm	1		
50	5024010227-4	Smooth Washer Ø36 X Ø61 X 6,30mm	1		
51	5530014539-5	Complete Suppoert Of Coulter Disc	1		
52	5204020099-1	Complete Hub	1		
53	2861417388-4	Coulter Plain Disc Blade 18" X 4,75 Fc Rd 80mm + 6F Rd 10,3mm D=115mm Doble Bevel	1		
54	5284010001-4	Flange Of Disc Hub	1		
55	5096010028-7	Hub Cap	2		
56	6020010403-2	Pressure Washer M20 Media	2		
57	6020311265-6	Hexagonal Nut M20 X 2,50 Ma Cl8 Ch.30mm H.16,00mm	2		
58	5024010007-7	Smooth Washer Ø20,3 X Ø46,5 X 4,75mm	2		
59	5024010289-4	Smooth Washer Ø20 X Ø58 X 8,00mm	2		
60	6020310746-6	Hexagonal Nut 3/8" 16F Unc Gr5 Ch.9/16" Height 8,50mm	6		
61	6020010406-7	Pressure Washer 3/8" Media Industry	6		
62	6020311029-7	Hexagonal Head Bolt 3/8" X 1.1/2" 16F Unc1A Gr5 Rt	6		
63	6020310478-5	Heavy Elastic Pin Ø6 X 60mm	1		
64	6020310486-6	Heavy Elastic Pin Ø10 X 60mm	1		
65	5304010009-8	Fixation Fork Of Coulter Disc	1		
66	5232011113-7	Support Shaft	1		
67	6020130108-7	Grease Fitting 1/8"	1		
68	5232012009-8	Shaft M20 X 186mm	1		
69	6020350201-2	Retainer Ø40,00 X Ø62,00 X 12,00mm	2		
70	6020350007-9	Bearing 6206(Skf-Nsk-Timken)	2		
71	5080020761-1	Bushing Of Ø19,1 X Ø40 X 15mm	2		
72	5204010088-1	Disc Hub	1		
73	6020050104-0	Cotterpin 3/16" X 1"	4		
74	5432010604-7	Articulation Pin 87mm	2		
75	6020250245-0	Helical Spring Ø14 X Ø19 X 130mm	1		
76	5432010224-6	Pin Of Furrower	1		
77	5432010606-3	Articulation Pin 93mm	2		
78	5080010016-7	Articulation Bushing	2		
79	6020317451-1	Hexagonal Head Bolt M12 X 1,75 X 100mm Cl8.8 Rp	2		
80	5530012363-4	Support Of Forrower	1		
81	5566010158-5	Spring Rod Of Furrower	1		
82	6020310847-0	Self-Locking Nut With Nylon M12 X 1 ,75 Ma Cl8 Ch.19mm H.12,00mm	2		
83	5532010228-5	Complete Furrower	1		
84	5400010107-1	Disarm Spring Of Forrower To Bushing Autolubrificante Complete	1		
85	5530011929-7	Disarm Support	1		
86	6020311069-6	Hexagonal Head Bolt 5/8" X 1.3/4" 11F Unc1A Gr5 Rt Wth Point	1		
87	6020310738-5	Hexagonal Nut 5/8" 11F Unc Gr5 Ch.1.1/16" Height 11,00mm	1		
88	6010602800-4	Point Of The Furrower	1		
89	5080011097-9	Bronze Bushing Of Ø19,2 X Ø23 X 25,40mm	4		
90	5532010229-3	Fertilizer Forrower	1		
91	6020310493-9	Heavy Elastic Pin Ø8 X 18mm	1		
92	5400010108-0	Disarm Spring Of Forrower To Bushing Autolubrificante	1		
93	5080011097-9	Bronze Bushing Of Ø19,2 X Ø23 X 25,40mm	4		
94	5530019701-8	CPL Larger Seed Conductor Holder	1		
95	5068010203-9	Special "U" Type Clamp M8 x 102.5 x 112mm	1		
96	6020010448-2	Flat Washer M8 Ø8,40XØ24,00X2,00mm	2		
97	6020317449-0	Low Self-Locking Hex Nut W/Nylon M8 X1.25 MA CL8 CH.13mm	2		
98	5530019702-6	Seed Conductor Support	1		
99	6020251880-2	Coil Spring Traction Ø27 x Ø3.00 x 352mm	1		

BALDAN

• Line with Double Fertilizer Disc with Ribbed Cutting Disc for 3rd Deposit

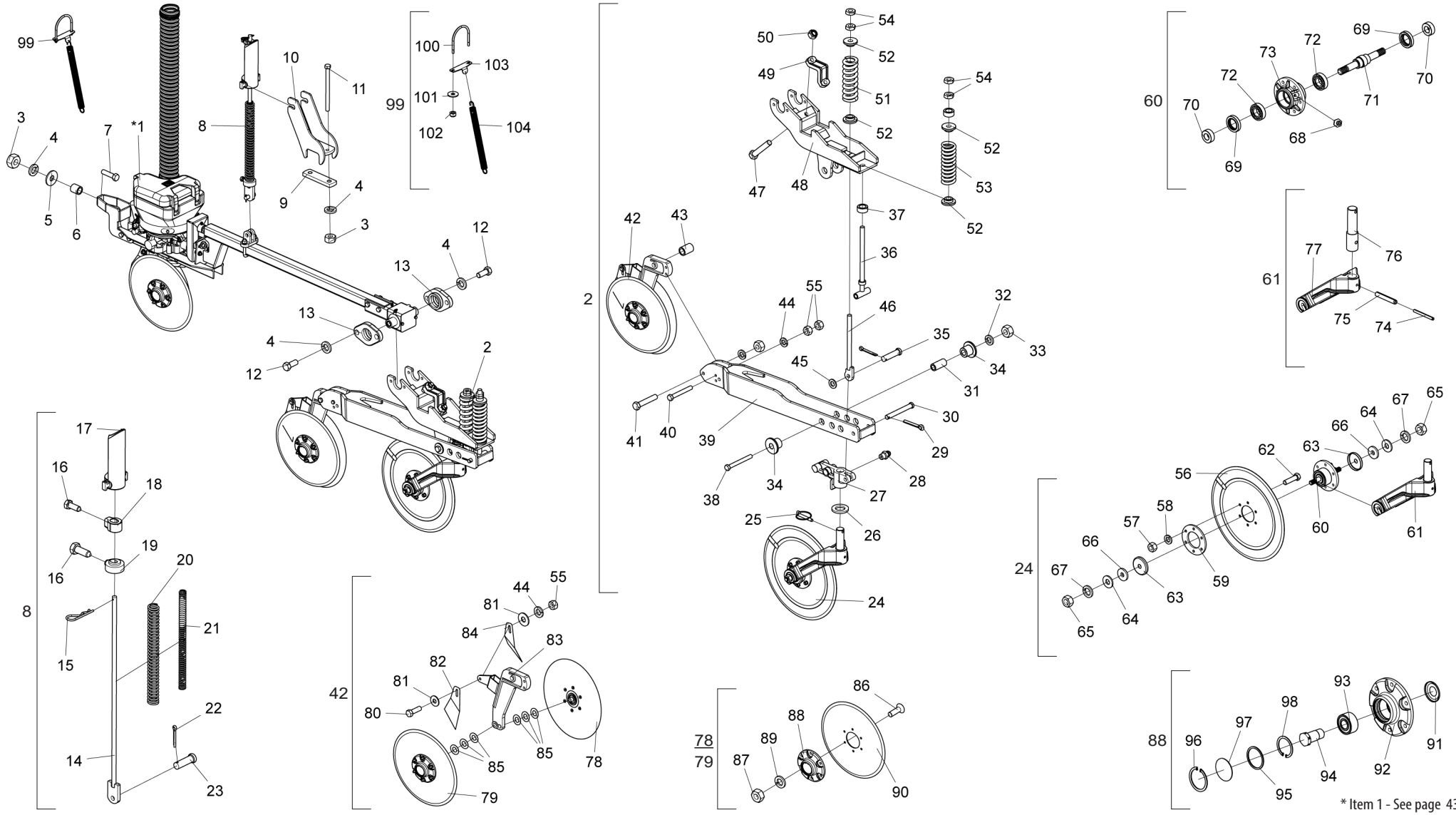

* Item 1 - See page 43

• Table Line with Double Fertilizer Disc with Ribbed Cutting Disc for 3rd Deposit

Item	Code	Product description	All	Smaller Right	Larger Left
*1	5124018093-0	Row of Seed 3rd Deposit Right		1	
*1	5124018094-8	Row of Seed 3rd Deposit Left			1
2	5124010960-7	Smaller Left Fertilizer Cart Complete W/Double Disc W/Ribbed Cutting Disc		1	
2	5124010959-3	Larger Right Fertilizer Trolley Complete With Ribbed Cutting Disc			1
3	6020310754-7	Hexagonal Nut 1/2" 12F W Gr5 Ch.7/8" Height 12,00mm	4		
4	6020010410-5	Pressure Washer 1/2" Media Industry	8		
5	5024010068-9	Smooth Washer Ø13,3 X Ø35,5 X 3,00mm	1		
6	5080020159-1	Bushing Of Ø13 X Ø19 X 21mm	1		
7	6020310049-6	Hexagonal Head Bolt 1/2" X 2" 12F W Gr5 Rp	1		
8	5566010181-0	Complete Spring Rod	1		
9	5136013228-9	Support Plate	1		
10	5530012361-8	Support Of Spring Rod	1		
11	6020310204-9	Hexagonal Head Bolt 1/2" X 7" 12F W Gr5 Rp	2		
12	6020310051-8	Hexagonal Head Bolt 1/2" X 1.1/4" 12F W Gr5 Rt	4		
13	5080010855-9	Row Support Fixation Bushing	2		
14	5566010183-6	Rod Spring	1		
15	6020390294-0	Lock Nma - Type "R" Ø3,5 X 67mm(Special)	1		
16	6020310349-5	Hexagonal Head Bolt M12 X 1,75 X 30mm Cl8.8 R Wth Point	2		
17	6010601285-0	Support Of Spring Rod	1		
18	5080011663-2	Fixation Support Of Spring Rod	1		
19	5530016364-4	Lower Support Of Triple Spring	1		
20	6020250298-1	Helical Spring Ø30,5 X Ø41,5 X 400mm	1		
21	6020250297-3	Helical Spring Ø17,5 X Ø25,5 X 400mm Internal	1		
22	6020050101-5	Cotterpin 1/8" X 1"	2		
23	6020310593-5	Pin Ø5/8" X 46mm	1		
24	5124010961-5	Cutting Disc Cart (Flat Ribbed Disc 18" X 4.75mm)	1		
25	6020390292-4	Lock Ø8 X 54mm	1		
26	5024010227-4	Smooth Washer Ø36 X Ø61 X 6,30mm	1		
27	5530012355-3	Support Of Coulter Disc		1	
27	5530012400-2	Support Of Coulter Disc			1
28	6020130100-1	Grease Fitting 1/4"	1		
29	6020050106-6	Cotterpin 3/16" X 1.1/2"	1		
30	6020310529-3	Pin Ø5/8"X 123mm	1		
31	5080010614-9	Bushing Of Ø16,2 X Ø26,5 X 59mm	1		
32	6020010412-1	Pressure Washer 5/8" Media Industry	1		
33	6020310760-1	Hexagonal Nut 5/8" 11F Unc Gr5 Ch.1.1/16" Height 15,00mm	1		
34	5080011179-7	Bushing Of Ø16,5 X Ø2" X 31,5mm	2		
35	6020310463-7	Cylinder Head Pin Ø5/8" X 60mm	1		
36	5566010184-4	Rod Spring	1		
37	5080010831-1	Bushing Of Ø20 X Ø32 X 15mm	2		
38	6020311083-1	Hexagonal Head Bolt 5/8" X 6" 11F Unc1A Gr5 Rp	1		
39	5072011620-8	Furrower Large Arm Of Double Disc		1	
39	5072011621-6	Furrower Large Arm Of Double Disc			1
40	6020311253-2	Hexagonal Head Bolt 3/8" X 3" 16F Unc1A Gr5 Rt	1		

Item	Code	Product description	All	Smaller Right	Larger Left
41	6020311058-0	Hexagonal Head Bolt 1/2" X 2.3/4" 12F W Gr5 Rp	1		
42	5124010870-8	Left fertilizer Double Disc Row (15")		1	
42	5124010869-4	Right fertilizer Double Disc Row (15")			1
43	5080010016-7	Articulation Bushing	1		
44	6020010406-7	Pressure Washer 3/8" Media Industry	1		
45	5024010154-5	Smooth Washer Ø16 X Ø29 X 3,00mm	1		
46	5566010129-1	Rod Coulter Disc	1		
47	6020317420-1	Hexagonal Head Bolt M16 X 2,00 X 90mm Cl8.8 Rp	2		
48	5530014930-7	Support Of Row	1		
49	6010601965-0	Fixation Clamp	1		
50	6020317443-0	Self-Locking Nut With Nylon M16 X 2,00 Ma Cl8 Ch.24mm H.16,00mm	2		
51	6020250326-0	Helical Spring Ø42,2 X Ø70 X 200mm	1		
52	6010600980-8	Back Bushing	4		
53	6020250222-1	Helical Spring Ø43 X Ø67 X 200mm	1		
54	6020310784-9	Hexagonal Nut 3/4" 10F Unc Gr5 Ch.1.1/4" Height 11,00mm	4		
55	6020310746-6	Hexagonal Nut 3/8" 16F Unc Gr5 Ch.9/16" Height 8,50mm	2		
56	3261417388-1	Rippled Plain Disc Blade 18" X 4,75 Hc Rd 52mm + 6H Rd 10,3mm D=115mm Doble Bevel	1		
57	6020310746-6	Hexagonal Nut 3/8" 16F Unc Gr5 Ch.9/16" Height 8,50mm	7		
58	6020010406-7	Pressure Washer 3/8" Media Industry	7		
59	5284010001-4	Flange Of Disc Hub	1		
60	5204020099-1	Complete Hub	1		
61	5530014539-5	Complete Suppoert Of Coulter Disc	1		
62	6020311029-7	Hexagonal Head Bolt 3/8" X 1.1/2" 16F Unc1A Gr5 Rt	6		
63	5096010028-7	Hub Cap	2		
64	5024010007-7	Smooth Washer Ø20,3 X Ø46,5 X 4,75mm	2		
65	6020311265-6	Hexagonal Nut M20 X 2,50 Ma Cl8 Ch.30mm H.16,00mm	2		
66	5024010289-4	Smooth Washer Ø20 X Ø58 X 8,00mm	2		
67	6020010403-2	Pressure Washer M20 Media	2		
68	6020130108-7	Grease Fitting 1/8"	1		
69	6020350201-2	Retainer Ø40,00 X Ø62,00 X 12,00mm	2		
70	5080020761-1	Bushing Of Ø19,1 X Ø40 X 15mm	2		
71	5232012009-8	Shaft M20 X 186mm	1		
72	6020350007-9	Bearing 6206(Skf-Nsk-Timken)	2		
73	5204010088-1	Disc Hub	1		
74	6020310478-5	Heavy Elastic Pin Ø6 X 60mm	1		
75	6020310486-6	Heavy Elastic Pin Ø10 X 60mm	1		
76	5232011113-7	Support Shaft	1		
77	5304010009-8	Fixation Fork Of Coulter Disc	1		
78	5204010459-3	Complete Left Hub (Plain Disc 15" X 4,00mm)	1		
79	5204010458-5	Complete Right Hub (Coulter Disc Blade 15" X 4,00mm)	1		
80	6020310026-7	Hexagonal Head Bolt 3/8" X 1.1/4" 16F Unc1A Gr5 Rt	1		
81	5024010075-1	Smooth Washer Ø10,3 X Ø25 X 2,00mm	2		
82	5352030057-7	Internal Right Scraper Of Disc	1		
83	5530012357-0	Support Of Left Fertilizer Double Disc		1	

BALDAN

• Table Line with Double Fertilizer Disc with Ribbed Cutting Disc for 3rd Deposit

Item	Code	Product description	All	Smaller Right	Larger Left
83	5530012339-1	Support Of Right Fertilizer Double Disc			1
84	5352030056-9	Internal Left Scraper Of Disc	1		
85	5024010024-7	Smooth Washer Ø20 X Ø38 X 1,21mm	6		
86	6020317573-9	Allen Bolt M8 X 1,25 X 25mm Cl12.9 RT	6		
87	6020310454-8	Hexagonal Nut M8 X 1,25 Ma Cl8 Ch.13mm H.6,50mm	6		
88	5204010452-6	Left Disc Hub	1		
88	5204010451-8	Right Disc Hub	1		
89	6020010004-5	Pressure Washer M8 Media	6		
90	2857397276-9	Coulter Plain Disc Blade 15 X 4,00 Hc Rd 80mm + 6H Rd 8,7mm D=115mm Single Bevel	1		
91	6020056005-4	Dual Ball Races Bearing Cap 5204Kp52-Sp6 (1ºline)	1		
92	5204010453-4	Hub Of Ø136 X 41mm	1		
93	6020350933-5	Sphere Bearing Double Row 5204Kp52-Sp6(1º Line)	1		
94	5420010099-1	Hexagonal Head Bolt 3/4" X 1.7/8" 16F Unf 1A Gr5 Rp - Read Left (Special)	1		
94	5420010098-3	Hexagonal Head Bolt 3/4" X 1.7/8" 16F Unf 1A Gr5 Rp - Read Right (Special)	1		
95	6020010095-9	Gascket Ring 047X 052X 2mm	1		
96	6020010289-7	Retaining Ring I-55	1		
97	5096010050-3	Hub Cap	1		
98	6020011053-9	Retaining Ring I-047	1		
99	5530019701-8	Suporte do Condutor de Semente Maior CPL	1		
100	5068010203-9	Abraçadeira Tipo "U" Especial M8 x 102,5 x 112mm	1		
101	6020010448-2	Arruela Lisa M8 Ø8,40XØ24,00X2,00mm	2		
102	6020317449-0	Porca Sextavada Autotravante C/Nylon Baixa M8 X1,25 MA CL8 CH.13mm	2		
103	5530019702-6	Suporte do Condutor de Semente	1		
104	6020251880-2	Mola Helicoidal de Tração Ø27 x Ø3,00 x 352mm	1		

• Row Of Seed for 3rd Deposit

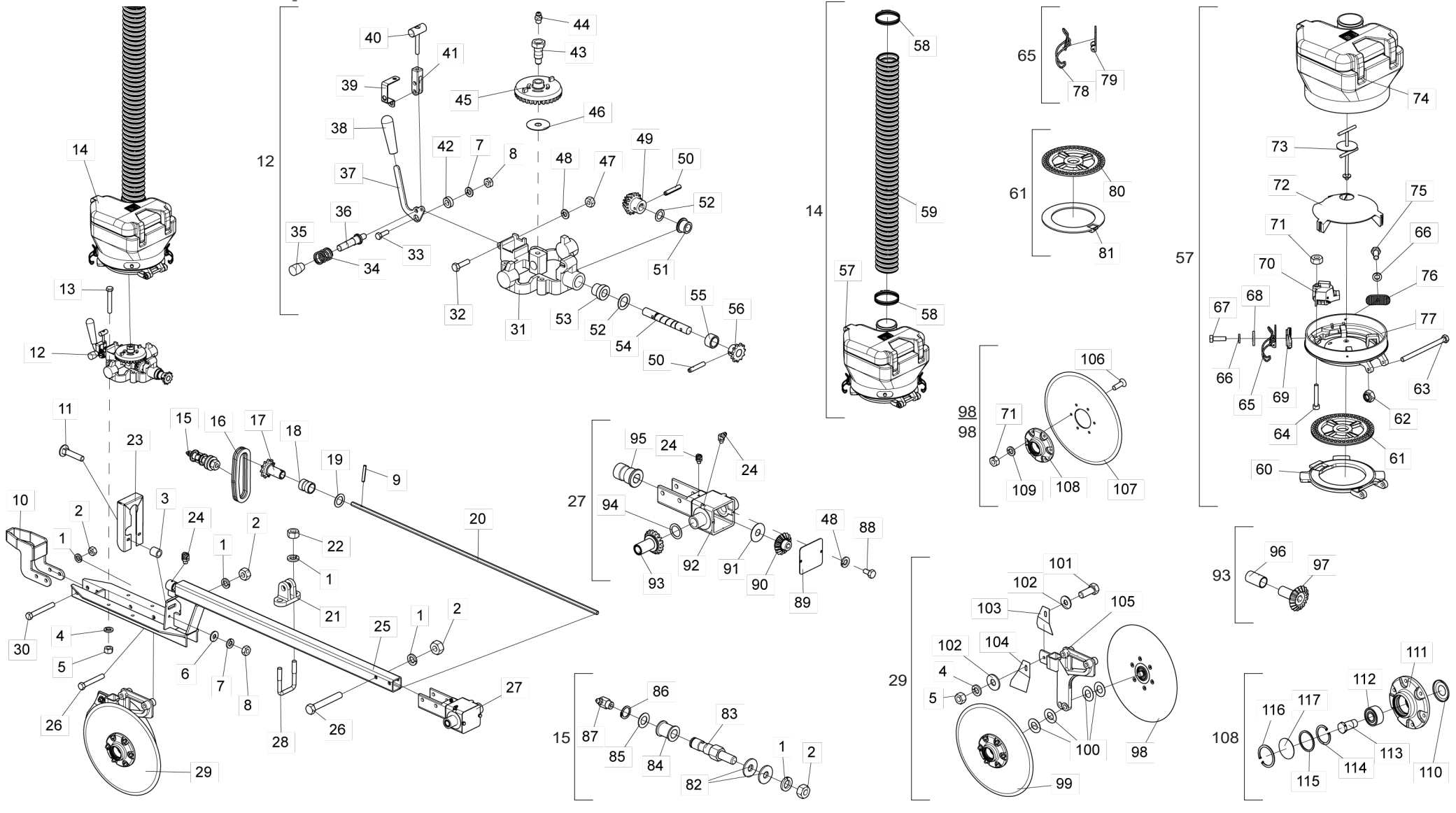

BALDAN

• Table Row Of Seed for 3rd Deposit

Item	Code	Product description	All	Right	Left	Small Left
1	6020010410-5	Pressure Washer 1/2" Media Industry		9	7	9
2	6020310754-7	Hexagonal Nut 1/2" 12F W Gr5 Ch.7/8" Height 12,00mm		7	5	7
3	5080010845-1	Bushing Of Ø10,3 X Ø5/8" X 16mm(Galvanised)	2			
4	6020010406-7	Pressure Washer 3/8" Media Industry	5			
5	6020310746-6	Hexagonal Nut 3/8" 16F Unc Gr5 Ch.9/16" Height 8,50mm	5			
6	5024010073-5	Smooth Washer Ø8,5 X Ø20 X 2,00mm	2			
7	6020010404-0	Pressure Washer 5/16" Media Industry	3			
8	6020310744-0	Hexagonal Nut 5/16" 18F Unc Gr5 Ch.1/2" Height 6,50mm	3			
9	6020310501-3	Heavy Elastic Pin Ø5 X 32mm	1			
10	5530012369-3	Complete Support Of Row Of Rows		1		1
11	6020311168-4	French Head Bolt 5/16" X 1.1/2" 18F Unc1A Gr2 Rp	2			
12	5044010465-4	Seed Distributor Base(2021)	1			
13	6020311037-8	Hexagonal Head Bolt 3/8" X 2.1/2" 16F Unc1A Gr2 Rp	4			
14	5092010683-5	Mangote Seed Box 3"x 1300mm Completa (Sistema Universal)		1		1
14	5092010684-3	Mangote Seed Box 3"x 1300mm Completa (Sistema Universal)			1	
15	5268010741-6	Complete Small Chain Stretcher	1			
16	6020050318-2	Chain (Asa 40) 29 Links + Amendment	1			
17	5428010038-5	Pinion Of 11 Teeth	1			
18	5080010854-0	Bushing Of Ø22 X Ø28 X 32mm	1			
19	5024010502-8	Pinion Washer	1			
20	5232011115-3	Hexagonal Shaft 1/2" X 1280mm		1		1
20	5232011098-0	Hexagonal Shaft 1/2" X 1480mm			1	
21	6010601172-1	Lower Support Of Rod (Small)	1			
22	6020310756-3	Hexagonal Nut 1/2" 12F W Gr5 Ch.3/4" Height 11,00mm	2			
23	5106010132-2	Chain Cover	1			
24	6020130104-4	Grease Fitting 1/4"	3			
25	5530012359-6	Support Of Small Seed Row		1		1
25	5530012338-3	Support Of Large Seed Row			1	
26	6020311061-0	Hexagonal Head Bolt 1/2" X 3.1/2" 12F W Gr5 Rp	4			
27	5092010526-0	Gear Box(Speed Box)	1			
28	5068010081-8	Clamp Of 84 X 64 X R.1/2" W	1			
29	5124010510-5	Right Row Of Seed Double Disc (15")		1		
29	5124010507-5	Left Row Of Seed Double Disc (15")			1	1
30	6020311065-3	Hexagonal Head Bolt 1/2" X 4" 12F W Gr5 Rp		2		2
31	5530018428-5	Seed Dispenser Base Bracket(2021)	1			
32	6020310019-4	Hexagonal Head Bolt 1/4" X 1" 20F Unc1A Gr2 Rt	1			
33	6020310038-0	Hexagonal Head Bolt 5/16" X 1" 18F Unc1A Gr5 Rt	1			
34	6020250577-8	Helical Spring Ø12,5 X Ø16,5 X 19mm	1			
35	6020430203-3	Handle Pma 330 Thread 3/8" X 16 Fios	1			
36	5432010449-4	Lock Pin Of Hopper	1			
37	5008010234-5	Lock Handle Of Seed Distributor Base	1			
38	6020050724-2	Rubber Cable	1			
39	5530014927-7	Support Of Spring	1			

Item	Code	Product description	All	Right	Left	Small Left
40	5432010450-8	Lock Pin	1			
41	5530014935-8	Adjustment Support Of Lock	1			
42	5080010408-1	Articulation Bushing Of Lock	1			
43	5232010521-8	Shaft Of Crown And Pinion Fixation	1			
44	6020130100-1	Grease Fitting 1/4"	2			
45	5164010022-6	Crown Of 33 Teeths	1			
46	6020010427-0	Plain Washer Ø14 X Ø50 X 1,21mm	2			
47	6020310742-3	Hexagonal Nut 1/4" 20F Unc Gr5 Ch.7/16" Height 5,50mm	1			
48	6020010402-4	Pressure Washer 1/4" Media Industry	3			
49	5428010055-5	Pinion 15 Teeths	1			
50	6020310488-2	Heavy Elastic Pin Ø6 X 32mm	2			
51	5080012201-2	Smaller Bronze Bushing	1			
52	5024010160-0	Smooth Washer Ø20 X Ø31 X 1,21mm	2			
53	5080012202-0	Larger Bronze Bushing	1			
54	5232012520-0	Drive Shaft	1			
55	5080020856-1	Bushing Ø20 X Ø28 X 15mm	1			
56	5428020016-9	Pinion Of 11 Teeth	1			
57	5092010494-8	Hose Seed Hopper 3" Universal System(2013)	1			
58	6020010712-0	Clamp 70-89 Ribbon 13/14mm	2			
59	5372012423-4	Reinforced Black IVPU-C Hose Vacuum-Air Ø3"x 1300mm	1			
60	5044010294-5	Articulation Base Universal System (2013)	1			
61	5220010140-5	Soy Deam Distributor Disc 90F Ø8mm(Ø35,10 X Ø189 X 4,50mm)With Ring 4,00mm	1			
62	6020317449-0	Self-Locking Nut With Nylon Low M8 X 1,25 Ma Cl8 Ch.13mm H.8,00mm	1			
63	6020310562-5	Hexagonal Head Bolt M8 X 1,25 X 115mm Cl8.8 Rp	1			
64	6020310166-2	Allen Bolt C/C M8 X 1,25 X 50mm Cl12.9 Rp (Phosphated)	1			
65	5460010005-2	Complete Wire Clamp	2			
66	6020010122-0	Pressure Washer M6 Media	4			
67	6020312403-4	Hexagonal Head Bolt M6 X 1,00 X 20mm Cl8.8 Rt	2			
68	5024010161-8	Smooth Washer Ø7 X Ø18 X 2,00mm	2			
69	5530011969-6	Seed Box Fixation Support	2			
70	6020050423-5	Complete Seed Distributor Box	1			
71	6020310454-8	Hexagonal Nut M8 X 1,25 Ma Cl8 Ch.13mm H.6,50mm	7			
72	6020390103-0	Protection Cover Of Universal System Seed	1			
73	5420010104-1	Bolt of Seed Hopper	1			
74	6020055415-1	Plastic Box For Seed 10 Liters With Cover (Nozzle 3")	1			
75	6020310291-0	Hexagonal Head Bolt M6 X 1,00 X 15mm Cl8.8 Rt	2			
76	5530011945-9	Seed Box Fixation Support	2			
77	5044010353-4	Universal Seed Distributor Base	1			
78	6020310680-0	Clamp 0,70	1			
79	5530010935-6	Fixation Support Of Clamp	1			
80	6020071801-4	Soy Deam Distributor Disc 90H Ø8mm (Ø35,10 X Ø189 X 4,50mm) Rampflow (Orange)	1			
81	6020015810-8	Soy Ring Mod U 4mm Plain (Orange) (1020022)	1			
82	5024010068-9	Smooth Washer Ø13,3 X Ø35,5 X 3,00mm	2			

• Table Row Of Seed for 3rd Deposit

Item	Code	Product description	All	Right	Left	Small Left
83	5232011116-1	Small Stretcher Shaft	1			
84	5506010033-0	Roller Of Stretcher	1			
85	5024010059-0	Smooth Washer Ø16,5 X Ø29 X 1,21mm	1			
86	6020010252-8	Retaining Oring	1			
87	6020130112-5	Grease Fitting 1/8"	1			
88	6020311000-9	Hexagonal Head Bolt 1/4" X 1/2" 20F Unc1A Gr5 Rt	2			
89	5538014695-8	Gear Box Cover	1			
90	5428010037-7	Pinion Of 16 Teeth	1			
91	5024010051-4	Smooth Washer Ø16 X Ø44 X 1,21mm	1			
92	5092010337-2	Gear Left Box	1			
93	5428010044-0	Pinion Of 18 Teeth With Bronze Bushing Ø28,4mm	1			
94	5024010057-3	Smooth Washer Ø29,5 X Ø41 X 1,21mm	1			
95	5080010853-2	Bushing Of Ø1.1/8" X 38mm W/Hexagonal Hole For Shaft De 1/2"	1			
96	5080010242-9	Bronze Bushing Of Ø24 X Ø28,4 X 49mm	1			
97	6020310511-0	Pinion 18 Teeth	1			
98	5204010459-3	Complete Left Hub (Plain Disc 15" X 4,00mm)	1			
99	5204010458-5	Complete Right Hub (Coulter Disc Blade 15" X 4,00mm)	1			
100	5024010024-7	Smooth Washer Ø20 X Ø38 X 1,21mm	4			
101	6020310054-2	Hexagonal Head Bolt 3/8" X 1" 16F Unc1A Gr2 Rt	1			
102	5024010075-1	Smooth Washer Ø10,3 X Ø25 X 2,00mm	2			
103	5352030048-8	Left Scraper Of Discs	1			
104	5352030047-0	Right Scraper Of Discs	1			
105	5530011791-0	Right Seed Double Disc Support		1		
105	5530011790-1	Support Of Left Seed Double Disc			1	1
106	6020317573-9	Allen Bolt M8 X 1,25 X 25mm Cl12.9 RT	6			
107	2857397276-9	Coulter Plain Disc Blade 15 X 4,00 Hc Rd 80mm + 6H Rd 8,7mm D=115mm Single Bevel	1			
108	5204010451-8	Right Disc Hub	1			
108	5204010452-6	Left Disc Hub	1			
109	6020010004-5	Pressure Washer M8 Media	6			
110	6020056005-4	Dual Ball Races Bearing Cap 5204Kp52-Sp6 (1ºline)	1			
111	5204010453-4	Hub Of Ø136 X 41mm	1			
112	6020350933-5	Sphere Bearing Double Row 5204Kp52-Sp6(1º Line)	1			
113	5420010098-3	Hexagonal Head Bolt 3/4" X 1.7/8" 16F Unf 1A Gr5 Rp - Read Right (Special)	1			
113	5420010099-1	Hexagonal Head Bolt 3/4" X 1.7/8" 16F Unf 1A Gr5 Rp - Read Left (Special)	1			
114	6020011053-9	Retaining Ring I-047	1			
115	6020010095-9	Gascket Ring 047X 052X 2mm	1			
116	6020010289-7	Retaining Ring I-55 G502-055-01 (Without Reinforcement)	1			
117	5096010050-3	Hub Cap	1			

BALDAN

• Seed Box

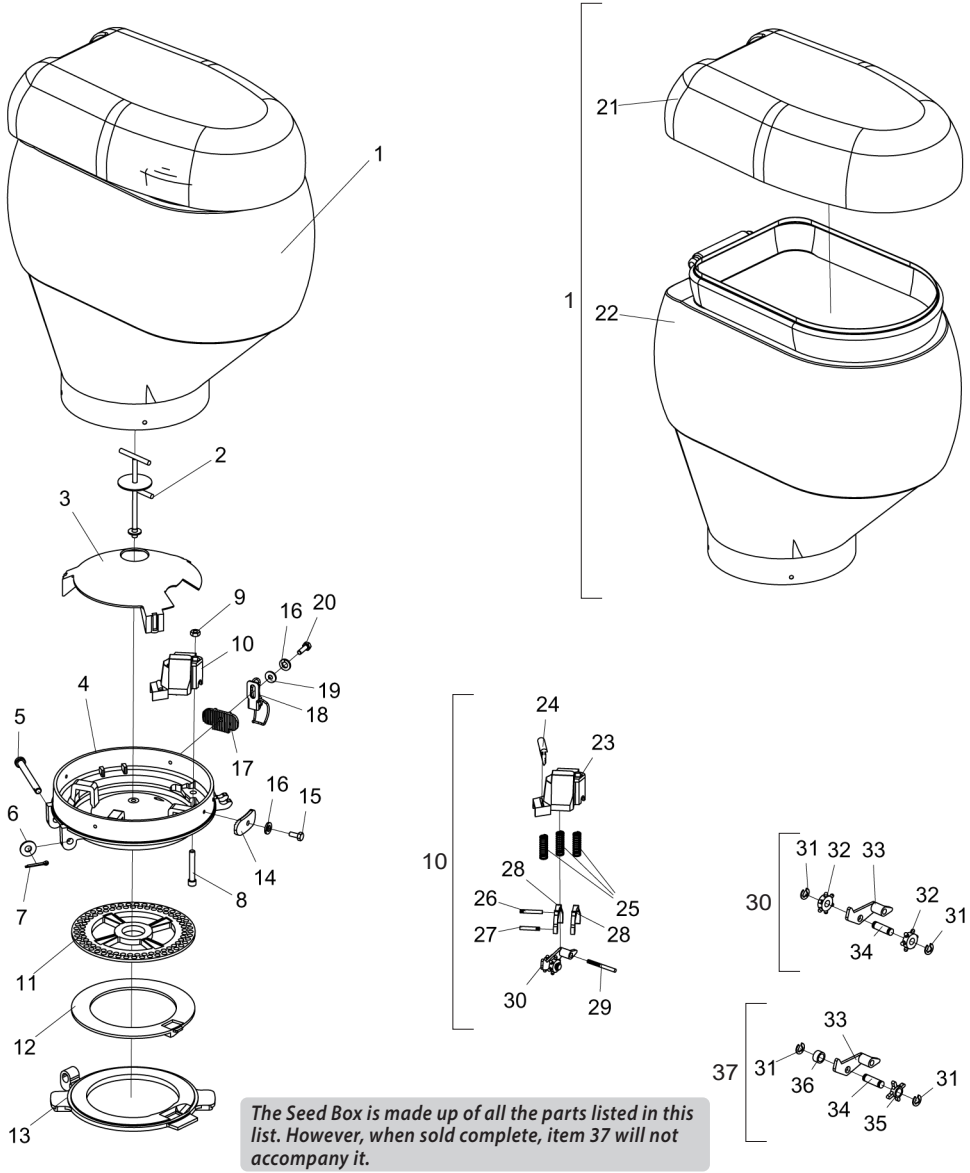

The Seed Box is made up of all the parts listed in this list. However, when sold complete, item 37 will not accompany it.

Item	Code	Product description	All
1	6020055109-8	Plastic Box For Seed 45 Liters With Cover	1
2	5420010047-9	Seed Hopper Bolt	1
3	6020390103-0	Protection Cover Of Universal System Seed	1
4	5044010078-0	Universal Seed Distributor Base	1
5	6020310445-9	Articulation Pin	1
6	5024010075-1	Smooth Washer Ø10,3 X Ø25 X 2,00mm	1
7	6020050101-5	Cotterpin 1/8" X 1"	1
8	6020317460-0	Allen Bolt C/C 5/16" X 2" 18F Unc1A Cl12.9 Rp (Phosphated)	1
9	6020310744-0	Hexagonal Nut 5/16" 18F Unc Gr5 Ch.1/2" Height 6,50mm	1
10	6020050423-5	Complete Seed Distributor Box	1
11	6020071801-4	Soy Deam Distributor Disc 90H Ø8mm (Ø35,10 X Ø189 X 4,50mm) Rampflow (Orange)	1
12	6020015810-8	Soy Ring Mod U 4mm Plain (Orange) (1020022)	1
13	5044010079-9	Articulable Base	1
14	5530011945-9	Seed Box Fixation Support	2
15	6020311001-7	Hexagonal Head Bolt 1/4" X 5/8" 20F Unc1A Gr5 Rt	2
16	6020010402-4	Pressure Washer 1/4" Media Industry	4
17	5530011969-6	Seed Box Fixation Support	2
18	5460010005-2	Complete Wire Clamp	2
19	5024010161-8	Smooth Washer Ø7 X Ø18 X 2,00mm	2
20	6020311004-1	Hexagonal Head Bolt 1/4" X 7/8" 20F Unc1A Gr5 Rt	2
21	6020390429-3	Cover Of Seed Plastic Hopper 45 Liters (Black)	1
22	6020055108-0	Plastic Box For Seed 45 Liters Without Cover	1
23	6020050404-9	Seed Distributor Box	1
24	6020310607-9	Protection	1
25	6020250328-7	Helical Spring Ø8 X Ø9,7 X 29,5mm	3
26	6020310424-6	Pin Ø5 X 34mm	1
27	6020310425-4	Pin Ø5 X 30mm	1
28	6020130207-5	Trigger Seed Cleaner	2
29	6020310423-8	Pin Ø5 X 52mm	1
30	6020130206-7	Trigger Cleaner	1
31	6020010246-3	Retaining Ring Rs-05	2
32	6020350784-7	Seed Batcher Rossete	2
33	6020130205-9	Batcher Trigger	1
34	6020310526-9	Plastic Pin Ø7 x 18.5 x 23.5	1
31	6020010246-3	Retaining Ring Rs-05	2
33	6020130205-9	Batcher Trigger	1
34	6020310526-9	Plastic Pin Ø7 x 18.5 x 23.5	1
35	6020350876-2	Batcher Rossete With Hole Ø8,3mm	1
36	6020030720-0	Bushing Ø8,30 X Ø11,50 X 6mm	1
37	6020350930-0	Complete Rossete	1

• Complete Fertilizer Cart with Double Disc

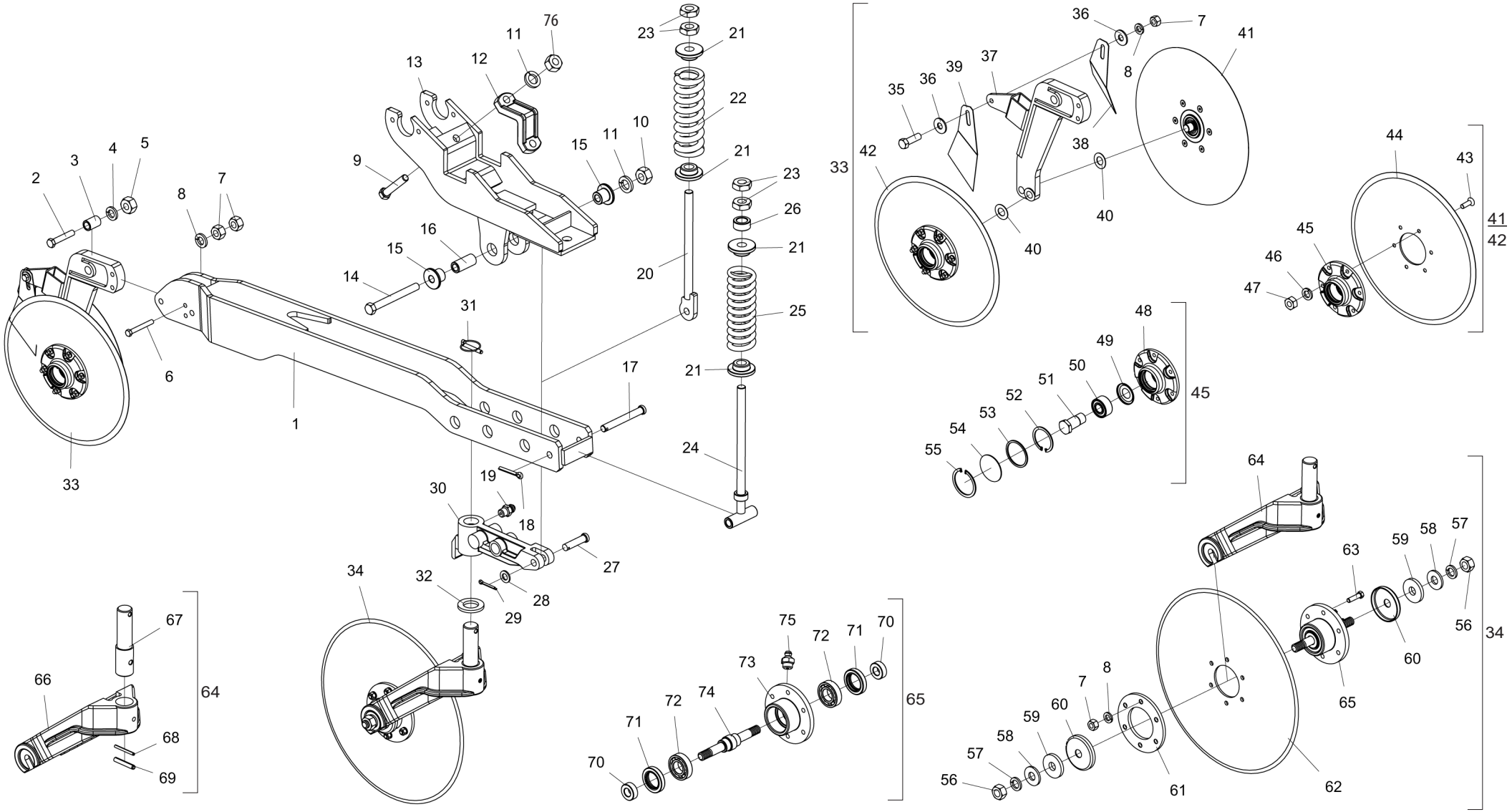

BALDAN

• Table Complete Fertilizer Cart with Double Disc

Item	Code	Product description	All	Larger Right	Small Left	Small Right	Small Left (Turbo disc 18")	Right cart (Turbo disc 18")
1	5072011621-6	Furrower Large Arm Of Double Disc		1				1
1	5072011620-8	Furrower Large Arm Of Double Disc			1	1	1	
2	6020311058-0	Hexagonal Head Bolt 1/2" X 2.3/4" 12F W Gr5 Rp	1					
3	5080010016-7	Articulation Bushing	1					
4	6020010410-5	Pressure Washer 1/2" Media Industry	1					
5	6020310754-7	Hexagonal Nut 1/2" 12F W Gr5 Ch.7/8" Height 12,00mm	1					
6	6020311253-2	Hexagonal Head Bolt 3/8" X 3" 16F Unc1A Gr5 Rt	1					
7	6020310746-6	Hexagonal Nut 3/8" 16F Unc Gr5 Ch.9/16" Height 8,50mm	9					
8	6020010406-7	Pressure Washer 3/8" Media Industry	8					
9	6020317420-1	Hexagonal Head Bolt M16 X 2,00 X 90mm Cl8.8 Rp	2					
10	6020310760-1	Hexagonal Nut 5/8" 11F Unc Gr5 Ch.1.1/16" Height 15,00mm	1					
11	6020010412-1	Pressure Washer 5/8" Media Industry	1					
12	6010601965-0	Fixation Clamp	1					
13	5530014930-7	Support Of Row	1					
14	6020311083-1	Hexagonal Head Bolt 5/8" X 6" 11F Unc1A Gr5 Rp	1					
15	5080011179-7	Bushing Of Ø16,5 X Ø2" X 31,5mm	2					1
16	5080010614-9	Bushing Of Ø16,2 X Ø26,5 X 59mm	1					1
17	6020310529-3	Pin Ø5/8"X 123mm	1					
18	6020050106-6	Cotterpin 3/16" X 1.1/2"	1					
19	6020130100-1	Grease Fitting 1/4"	1					
20	5566010129-1	Rod Coulter Disc	1					
21	6010600980-8	Back Bushing	4					
22	6020250326-0	Helical Spring Ø42,2 X Ø70 X 200mm	1					
23	6020310784-9	Hexagonal Nut 3/4" 10F Unc Gr5 Ch.1.1/4" Height 11,00mm	4					
24	5566010184-4	Rod Spring	1					
25	6020250222-1	Helical Spring Ø43 X Ø67 X 200mm	1					
26	5080010831-1	Bushing Of Ø20 X Ø32 X 15mm	1					
27	6020310463-7	Cylinder Head Pin Ø5/8" X 60mm	1					
28	5024010154-5	Smooth Washer Ø16 X Ø29 X 3,00mm	1					
29	6020050101-5	Cotterpin 1/8" X 1"	1					
30	5530012400-2	Support Of Coulter Disc		1				1
30	5530012355-3	Support Of Coulter Disc			1	1	1	1
31	6020390292-4	Lock Ø8 X 54mm	1					
32	5024010227-4	Smooth Washer Ø36 X Ø61 X 6,30mm	1					
33	5124010869-4	Right fertilizer Double Disc Row (15")		1		1		
33	5124010870-8	Left fertilizer Double Disc Row (15")			1		1	
34	5124010589-0	Coulter Disc (Plain Disc Blade 18" X 5mm)		1	1	1		
34	5124018100-6	Cutting Disc Cart (18"Turbo Disc)					1	1
35	6020310026-7	Hexagonal Head Bolt 3/8" X 1.1/4" 16F Unc1A Gr5 Rt	1					
36	5024010075-1	Smooth Washer Ø10,3 X Ø25 X 2,00mm	2					
37	5530012339-1	Support Of Right Fertilizer Double Disc		1		1		
37	5530012357-0	Support Of Left Fertilizer Double Disc			1		1	

Item	Code	Product description	All	Larger Right	Small Left	Small Right	Small Left (Turbo disc 18")	Right cart (Turbo disc 18")
38	5352030056-9	Internal Left Scraper Of Disc	1					
39	5352030057-7	Internal Right Scraper Of Disc	1					
40	5024010024-7	Smooth Washer Ø20 X Ø38 X 1,21mm	6					
41	5204010459-3	Complete Left Hub (Plain Disc 15" X 4,00mm)	1					
42	5204010458-5	Complete Right Hub (Coulter Disc Blade 15" X 4,00mm)	1					
43	6020317573-9	Allen Bolt M8 X 1,25 X 25mm Cl12.9 RT	6					
44	2857397276-9	Coulter Plain Disc Blade 15 X 4,00 Hc Rd 80mm + 6H Rd 8,7mm D=115mm Single Bevel	1					
45	5204010451-8	Right Disc Hub	1					
45	5204010452-6	Left Disc Hub	1					
46	6020010004-5	Pressure Washer M8 Media	6					
47	6020310454-8	Hexagonal Nut M8 X 1,25 Ma Cl8 Ch.13mm H.6,50mm	6					
48	5204010453-4	Hub Of Ø136 X 41mm	1					
49	6020056005-4	Dual Ball Races Bearing Cap 5204Kp52-Sp6 (1ºline)	1					
50	6020350933-5	Sphere Bearing Double Row 5204Kp52-Sp6(1º Line)	1					
51	5420010098-3	Hexagonal Head Bolt 3/4" X 1.7/8" 16F Unf 1A Gr5 Rp - Read Right (Special)	1					
51	5420010099-1	Hexagonal Head Bolt 3/4" X 1.7/8" 16F Unf 1A Gr5 Rp - Read Left (Special)	1					
52	6020011053-9	Retaining Ring I-047	1					
53	6020010095-9	Gascket Ring 047X 052X 2mm	1					
54	5096010050-3	Hub Cap	1					
55	6020010289-7	Retaining Ring I-55	1					
56	6020311265-6	Hexagonal Nut M20 X 2,50 Ma Cl8 Ch.30mm H.16,00mm	2					
57	6020010403-2	Pressure Washer M20 Media	2					
58	5024010007-7	Smooth Washer Ø20,3 X Ø46,5 X 4,75mm	2					
59	5024010289-4	Smooth Washer Ø20 X Ø58 X 8,00mm	2					
60	5096010028-7	Hub Cap	2					
61	5284010001-4	Flange Of Disc Hub	1					
62	4061417377-9	Turbo Disc 18"X 4.75 Fc Rd 80mm + 6F Rd 10.3mm D=115mm Afd(25 Waves)		1	1	1		
62	2861417388-4	Coulter Plain Disc Blade 18"X 4,75 Fc Rd 80mm + 6F Rd 10,3mm D=115mm Doble Bevel					1	
63	6020311029-7	Hexagonal Head Bolt 3/8" X 1.1/2" 16F Unc1A Gr5 Rt	6					
64	5530014539-5	Complete Suppoert Of Coulter Disc	1					
65	5204020099-1	Complete Hub	1					
66	5304010009-8	Fixation Fork Of Coulter Disc	1					
67	5232011113-7	Support Shaft	1					
68	6020310478-5	Heavy Elastic Pin Ø6 X 60mm	1					
69	6020310486-6	Heavy Elastic Pin Ø10 X 60mm	1					
70	5080020761-1	Bushing Of Ø19,1 X Ø40 X 15mm	2					
71	6020350201-2	Retainer Ø40,00 X Ø62,00 X 12,00mm	2					
72	6020350007-9	Bearing 6206(Skf-Nsk-Timken)	2					
73	5204010088-1	Disc Hub	1					
74	5232012009-8	Shaft M20 X 186mm	1					
75	6020130108-7	Grease Fitting 1/8"	1					
76	6020317443-0	Self-Locking Nut With Nylon M16 X 2,00 Ma Cl8 Ch.24mm H.16,00mm	2					

• Complete Cart with Fuse Pin Groove

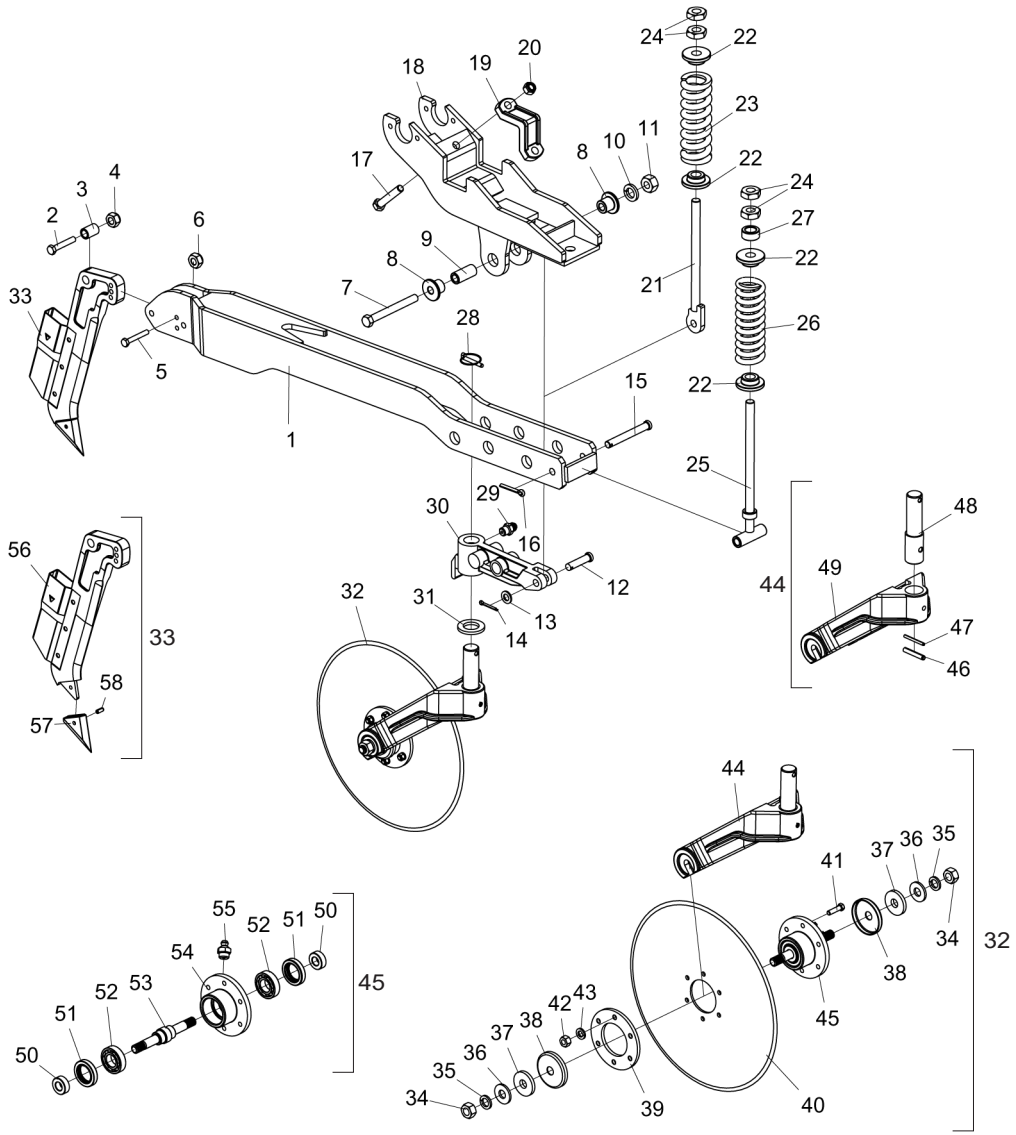

Item	Code	Product description	All	Lager	Smaller
1	5072011621-6	Furrower Large Arm Of Double Disc		1	
1	5072011620-8	Furrower Large Arm Of Double Disc			1
2	6020310978-7	Hexagonal Head Bolt M12 X 1,75 X 70mm Cl8.8 Rt	1		
3	5080010016-7	Articulation Bushing	1		
4	6020310847-0	Self-Locking Nut With Nylon M12 X 1 ,75 Ma Cl8 Ch.19mm H.12,00mm	1		
5	6020317444-9	Hexagonal Head Bolt M10 X 1,50 X 70mm Cl8.8 Rt	1		
6	6020317435-0	Self-Locking Nut With Nylon M10 X 1,50 Ma Cl8 Ch.17mm H.10,00mm	1		
7	6020311083-1	Hexagonal Head Bolt 5/8" X 6" 11F Unc1A Gr5 Rp	1		
8	5080011179-7	Bushing Of Ø16,5 X Ø2" X 31,5mm	2		
9	5080010614-9	Bushing Of Ø16,2 X Ø26,5 X 59mm	1		
10	6020010412-1	Pressure Washer 5/8" Media Industry	1		
11	6020310760-1	Hexagonal Nut 5/8" 11F Unc Gr5 Ch.1.1/16" Height 15,00mm	1		
12	6020310463-7	Cylinder Head Pin Ø5/8" X 60mm	1		
13	5024010154-5	Smooth Washer Ø16 X Ø29 X 3,00mm	1		
14	6020050101-5	Cotterpin 1/8" X 1"	1		
15	6020310529-3	Pin Ø5/8"X 123mm	1		
16	6020050106-6	Cotterpin 3/16" X 1.1/2"	1		
17	6020317420-1	Hexagonal Head Bolt M16 X 2,00 X 90mm Cl8.8 Rp	2		
18	5530014930-7	Support Of Row	1		
19	6010601965-0	Fixation Clamp	1		
20	6020317443-0	Self-Locking Nut With Nylon M16 X 2,00 Ma Cl8 Ch.24mm H.16,00mm	2		
21	5566010129-1	Rod Coulter Disc	1		
22	6010600980-8	Back Bushing	4		
23	6020250326-0	Helical Spring Ø42,2 X Ø70 X 200mm	1		
24	6020310784-9	Hexagonal Nut 3/4" 10F Unc Gr5 Ch.1.1/4" Height 11,00mm	4		
25	5566010184-4	Rod Spring	1		
26	6020250222-1	Helical Spring Ø43 X Ø67 X 200mm	1		
27	5080010831-1	Bushing Of Ø20 X Ø32 X 15mm	1		
28	6020390292-4	Lock Ø8 X 54mm	1		
29	6020130100-1	Grease Fitting 1/4"	1		
30	5530012400-2	Support Of Coulter Disc		1	
30	5530012355-3	Support Of Coulter Disc			1
31	5024010227-4	Smooth Washer Ø36 X Ø61 X 6,30mm	1		
32	5124010589-0	Coulter Disc (Plain Disc Blade 18" X 5mm)	1		
33	5532010227-7	Complete Furrower	1		
34	6020311265-6	Hexagonal Nut M20 X 2,50 Ma Cl8 Ch.30mm H.16,00mm	2		
35	6020010403-2	Pressure Washer M20 Media	2		
36	5024010007-7	Smooth Washer Ø20,3 X Ø46,5 X 4,75mm	2		
37	5024010289-4	Smooth Washer Ø20 X Ø58 X 8,00mm	2		
38	5096010028-7	Hub Cap	2		
39	5284010001-4	Flange Of Disc Hub	1		
40	2861417388-4	Coulter Plain Disc Blade 18"X 4,75 Fc Rd 80mm + 6F Rd 10,3mm D=115mm Doble Bevel	1		
41	6020311029-7	Hexagonal Head Bolt 3/8" X 1.1/2" 16F Unc1A Gr5 Rt	6		
42	6020310746-6	Hexagonal Nut 3/8" 16F Unc Gr5 Ch.9/16" Height 8,50mm	6		
43	6020010406-7	Pressure Washer 3/8" Media Industry	6		
44	5530014539-5	Complete Suppoert Of Coulter Disc	1		
45	5204020099-1	Complete Hub	1		
46	6020310486-6	Heavy Elastic Pin Ø10 X 60mm	1		
47	6020310478-5	Heavy Elastic Pin Ø6 X 60mm	1		
48	5232011113-7	Support Shaft	1		
49	5304010009-8	Fixation Fork Of Coulter Disc	1		
50	5080020761-1	Bushing Of Ø19,1 X Ø40 X 15mm	2		
51	6020350201-2	Retainer Ø40,00 X Ø62,00 X 12,00mm	2		
52	6020350007-9	Bearing 6206(Skf-Nsk-Timken)	2		
53	5232012009-8	Shaft M20 X 186mm	1		
54	5204010088-1	Disc Hub	1		
55	6020130108-7	Grease Fitting 1/8"	1		
56	5532010226-9	Furrower Of Fertilizer	1		
57	6010602800-4	Point Of The Furrower	1		
58	6020310493-9	Heavy Elastic Pin Ø8 X 18mm	1		

• Complete Trolley with Disarming and Automatic Resetting Furrower

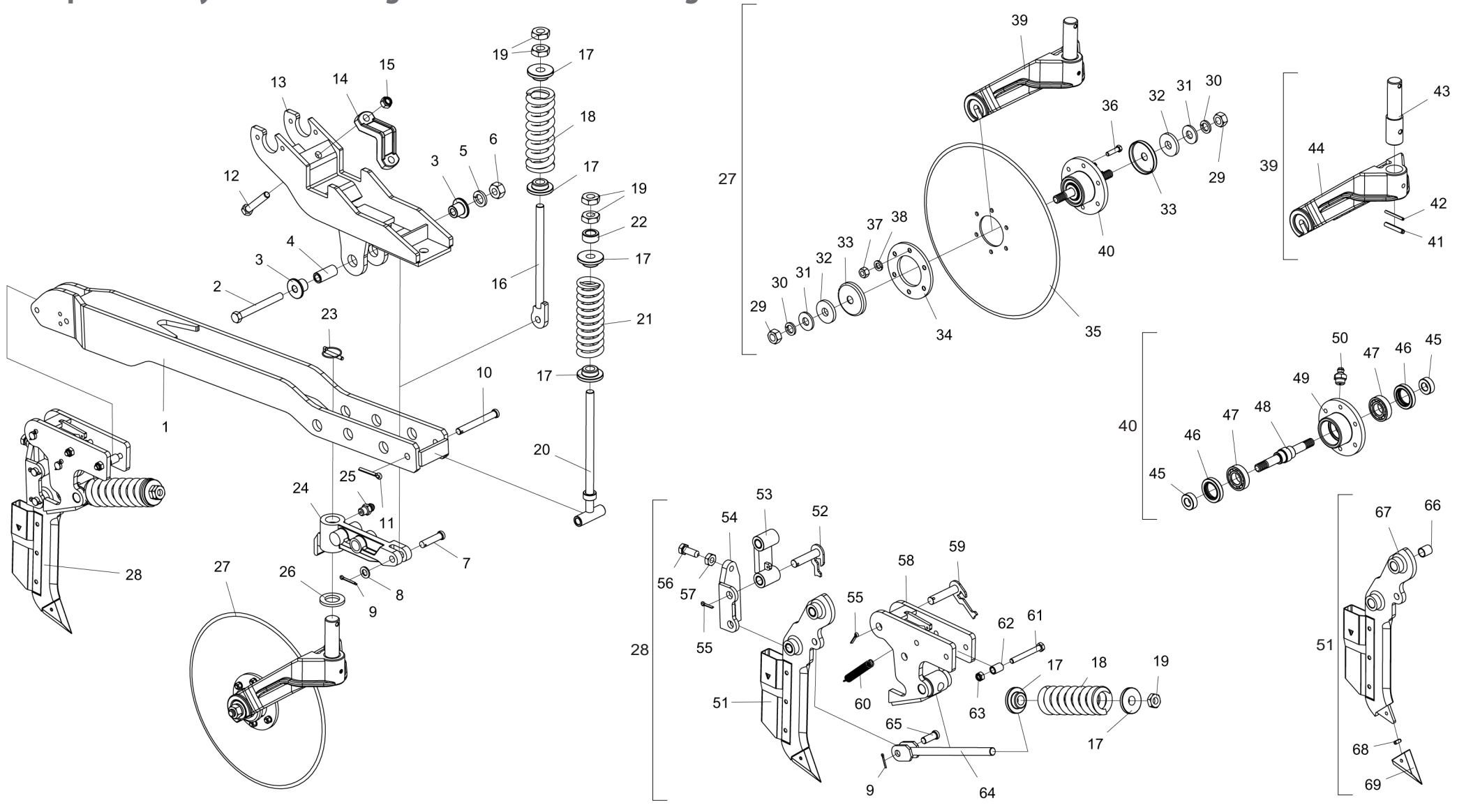

• Table Complete Trolley with Disarming and Automatic Resetting Furrower

Item	Code	Product description	All	Larger	Smaller
1	5072011621-6	Furrower Large Arm Of Double Disc		1	
1	5072011620-8	Furrower Large Arm Of Double Disc			1
2	6020311083-1	Hexagonal Head Bolt 5/8" X 6" 11F Unc1A Gr5 Rp	1		
3	5080011179-7	Bushing Of Ø16,5 X Ø2" X 31,5mm	2		
4	5080010614-9	Bushing Of Ø16,2 X Ø26,5 X 59mm	1		
5	6020010412-1	Pressure Washer 5/8" Media Industry	1		
6	6020310760-1	Hexagonal Nut 5/8" 11F Unc Gr5 Ch.1.1/16" Height 15,00mm	1		
7	6020310463-7	Cylinder Head Pin Ø5/8" X 60mm	1		
8	5024010154-5	Smooth Washer Ø16 X Ø29 X 3,00mm	1		
9	6020050101-5	Cotterpin 1/8" X 1"	2		
10	6020310529-3	Pin Ø5/8"X 123mm	1		
11	6020050106-6	Cotterpin 3/16" X 1.1/2"	1		
12	6020310186-7	Hexagonal Head Bolt M16 X 2,00 X 80mm Cl8.8 Rp	2		
13	5530014930-7	Support Of Row	1		
14	6010601965-0	Fixation Clamp	1		
15	6020317443-0	Self-Locking Nut With Nylon M16 X 2,00 Ma Cl8 Ch.24mm H.16,00mm	2		
16	5566010129-1	Rod Coulter Disc	1		
17	6010600980-8	Back Bushing	6		
18	6020250326-0	Helical Spring Ø42,2 X Ø70 X 200mm	2		
19	6020310784-9	Hexagonal Nut 3/4" 10F Unc Gr5 Ch.1.1/4" Height 11,00mm	6		
20	5566010184-4	Rod Spring	1		
21	6020250222-1	Helical Spring Ø43 X Ø67 X 200mm	1		
22	5080010831-1	Bushing Of Ø20 X Ø32 X 15mm	1		
23	6020390292-4	Lock Ø8 X 54mm	1		
24	5530012400-2	Support Of Coulter Disc		1	
24	5530012355-3	Support Of Coulter Disc			1
25	6020130100-1	Grease Fitting 1/4"	1		
26	5024010227-4	Smooth Washer Ø36 X Ø61 X 6,30mm	1		
27	5124010589-0	Coulter Disc (Plain Disc Blade 18" X 5mm)	1		
28	5532010246-3	Automatic Disarm And Reset Furrower	1		
29	6020311265-6	Hexagonal Nut M20 X 2,50 Ma Cl8 Ch.30mm H.16,00mm	2		
30	6020010403-2	Pressure Washer M20 Media	2		
31	5024010007-7	Smooth Washer Ø20,3 X Ø46,5 X 4,75mm	2		
32	5024010289-4	Smooth Washer Ø20 X Ø58 X 8,00mm	2		
33	5096010028-7	Hub Cap	2		
34	5284010001-4	Flange Of Disc Hub	1		
35	2861417388-4	Coulter Plain Disc Blade 18" X 4,75 Fc Rd 80mm + 6F Rd 10,3mm D=115mm Doble Bevel	1		
36	6020311029-7	Hexagonal Head Bolt 3/8" X 1.1/2" 16F Unc1A Gr5 Rt	6		
37	6020310746-6	Hexagonal Nut 3/8" 16F Unc Gr5 Ch.9/16" Height 8,50mm	6		
38	6020010406-7	Pressure Washer 3/8" Media Industry	6		
39	5530014539-5	Complete Suppoert Of Coulter Disc	1		
40	5204020099-1	Complete Hub	1		
41	6020310486-6	Heavy Elastic Pin Ø10 X 60mm	1		
42	6020310478-5	Heavy Elastic Pin Ø6 X 60mm	1		

Item	Code	Product description	All	Larger	Smaller
43	5232011113-7	Support Shaft	1		
44	5304010009-8	Fixation Fork Of Coulter Disc	1		
45	5080020761-1	Bushing Of Ø19,1 X Ø40 X 15mm	2		
46	6020350201-2	Retainer Ø40,00 X Ø62,00 X 12,00mm	2		
47	6020350007-9	Bearing 6206(Skf-Nsk-Timken)	2		
48	5232012009-8	Shaft M20 X 186mm	1		
49	5204010088-1	Disc Hub	1		
50	6020130108-7	Grease Fitting 1/8"	1		
51	5532010228-5	Complete Furrower	1		
52	5432010604-7	Articulation Pin 87mm	2		
53	5400010107-1	Disarm Spring Of Forrower To Bushing Autolubrificante Complete	1		
54	5530011929-7	Disarm Support	1		
55	6020050104-0	Cotterpin 3/16" X 1"	4		
56	6020311069-6	Hexagonal Head Bolt 5/8" X 1.3/4" 11F Unc1A Gr5 Rt Wth Point	1		
57	6020310738-5	Hexagonal Nut 5/8" 11F Unc Gr5 Ch.1.1/16" Height 11,00mm	1		
58	5530012363-4	Support Of Forrower	1		
59	5432010606-3	Articulation Pin 93mm	2		
60	6020250245-0	Helical Spring Ø14 X Ø19 X 130mm	1		
61	6020317451-1	Hexagonal Head Bolt M12 X 1,75 X 100mm Cl8.8 Rp	2		
62	5080010016-7	Articulation Bushing	2		
63	6020310847-0	Self-Locking Nut With Nylon M12 X 1 ,75 Ma Cl8 Ch.19mm H.12,00mm	2		
64	5566010158-5	Spring Rod Of Furrower	1		
65	5432010224-6	Pin Of Furrower	1		
66	5080011097-9	Bronze Bushing Of Ø19,2 X Ø23 X 25,40mm	4		
67	5532010229-3	Fertilizer Forrower	1		
68	6020310493-9	Heavy Elastic Pin Ø8 X 18mm	1		
69	6010602800-4	Point Of The Furrower	1		

• Row with Wheel Depth and "V" Wheel

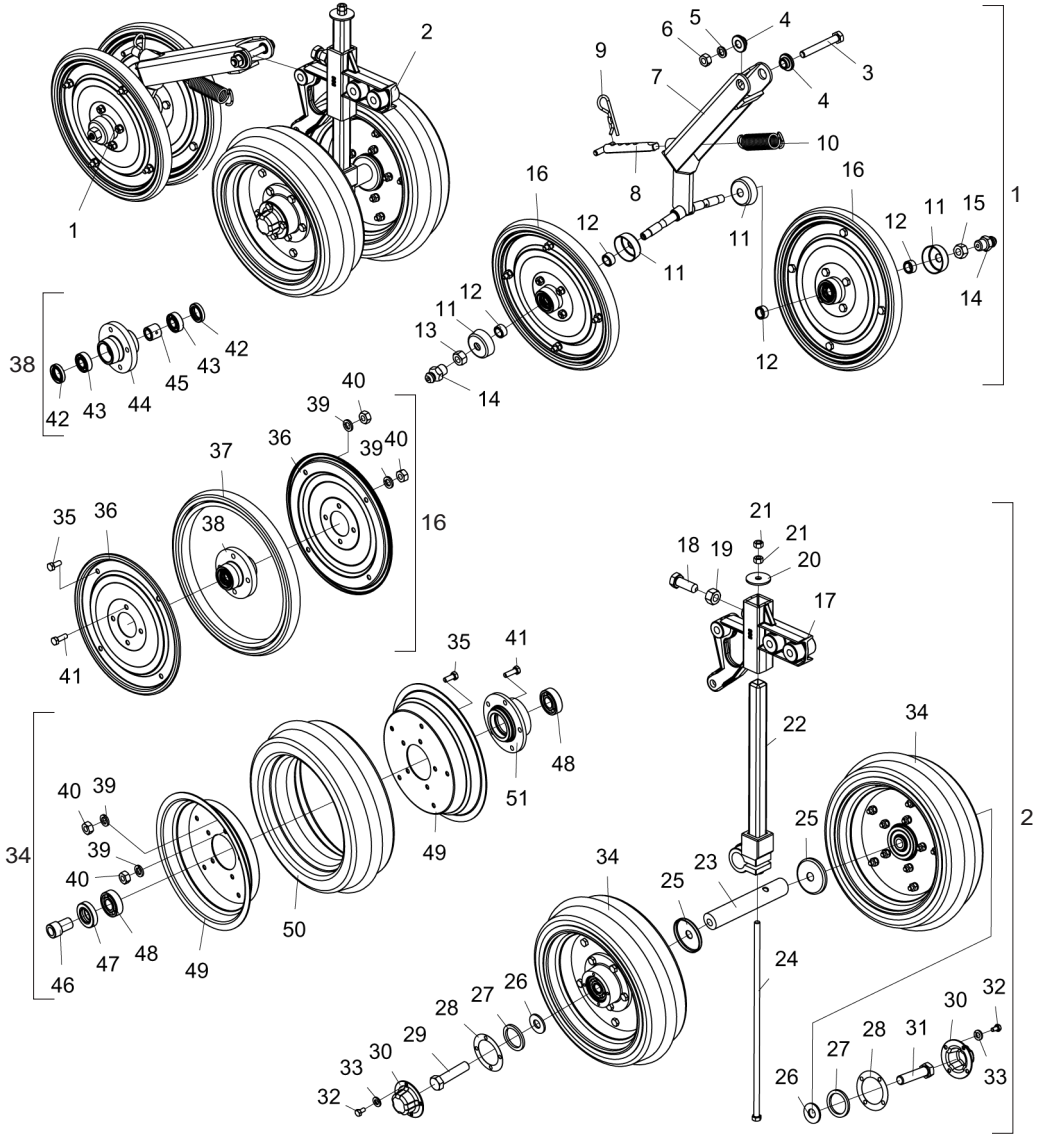

Item	Code	Product description	All
1	5124080057-1	Row Of Compactation Wheel Type "V"	1
2	5124080050-4	Row Of Depth Wheel With Regulating Support	1
3	6020317495-3	Hexagonal Head Bolt M12 X 1,75 X 90mm Cl8.8 Rp	1
4	5080020484-1	Bushing Of Ø13,1 X Ø31,5 X 12,5mm	2
5	6020010395-8	Pressure Washer M12 Media	1
6	6020310820-9	Hexagonal Nut M12 X 1,75 Ma Cl8 Ch.19mm H.10,00mm	1
7	5530160231-5	Small Oscilating Support	1
8	5432060014-9	Handle 5/8" X 131mm	1
9	6020390308-4	Lock Nma - Type "R" Ø4,5 X 80mm	1
10	6020250658-8	Helical Spring Ø21,5 X Ø28,5 X 95mm	1
11	6020059512-5	Hub Cap	4
12	5080020710-7	Bushing Of Ø15 X Ø22,22 X 12mm	4
13	6020310736-9	Hexagonal Nut 9/16" 18F Unf Gr5 Ch.7/8" Height 12,50mm	1
14	6020130100-1	Grease Fitting 1/4"	2
15	6020310737-7	Hexagonal Nut 9/16" 18F Rf/Esq Unf Gr5 Ch.7/8" Height 12,50mm	1
16	5498090024-2	Spare Compaction Wheel	2
17	5530180108-3	Support Of Regulator	1
18	6020311069-6	Hexagonal Head Bolt 5/8" X 1.3/4" 11F Unc1A Gr5 Rt Wth Point	1
19	6020310765-2	Hexagonal Nut 5/8" 11F Unc Gr5 Ch.15/16" Height 14,00mm	1
20	5024010206-1	Smooth Washer Ø10,6 X Ø44 X 3,00mm	1
21	6020310746-6	Hexagonal Nut 3/8" 16F Unc Gr5 Ch.9/16" Height 8,50mm	2
22	5484040022-3	Depth Regulator	1
23	5232020121-7	Shaft Ø1.1/4" X 190mm	1
24	6020311039-4	Hexagonal Head Bolt 3/8" X 15.1/2" 16F Unc1A Gr2 Rp	1
25	5096010031-7	Cap Ø16 X Ø63,6 X 7,6mm	2
26	5024010239-8	Smooth Washer Ø16,5 X Ø37 X 3,00mm	2
27	5024010330-0	Smooth Washer Ø38,8 X Ø50,2 X 4,00mm	2
28	6020190098-3	Gascket Ø50,3 X Ø73,5 X 1/64"	2
29	6020310292-8	Hexagonal Head Bolt 5/8" X 2.3/4" 11F Unc1A Gr5 Rp Right Thread	1
30	6020050640-8	Hub Cap	2
31	6020310293-6	Hexagonal Head Bolt 5/8" X 2.3/4" 11F Unc1A Gr5 Rp Left Thread	1
32	6020311000-9	Hexagonal Head Bolt 1/4" X 1/2" 20F Unc1A Gr5 Rt	8
33	6020010402-4	Pressure Washer 1/4" Media Industry	8
34	5498100047-4	Small Compaction Wheel	2
35	6020311269-9	Hexagonal Head Bolt M8 X 1,25 X 20mm Cl8.8 Rt	9
36	5288020025-9	Wheel Ring	2
37	6020010808-9	Rim 300 X 25mm	1
38	5204110018-4	Complete Hub Of Wheel	1
39	6020010004-5	Pressure Washer M8 Media	18
40	6020310454-8	Hexagonal Nut M8 X 1,25 Ma Cl8 Ch.13mm H.6,50mm	18
41	6020310448-3	Hexagonal Head Bolt M8 X 1,25 X 25mm Cl8.8 Rt	9
42	6020350211-0	Retainer Ø22,00 X Ø35,00 X 6,70mm	2
43	6020350871-1	Sphere Rigid Bearing 6202 (Skf-Nsk-Timken)	2
44	5204110017-6	Wheel Hub	1
45	5080020655-0	Bushing Of Ø16 X Ø25 X 22mm	1
46	5080010146-5	Bushing Of Ø16 X Ø26 X 44mm	1
47	6020350204-7	Retainer Ø25,00 X Ø47,00 X 10,00mm	1
48	6020350867-3	Sphere Rigid Bearing 6204 (Skf-Nsk-Timken)	2
49	5018010016-1	Rubber Wheel Rim	2
50	6020010812-7	Convex Compactation Rim 811/9 103-8	1
51	5204010174-8	Compactation Wheel Hub	1

• Row of the Eccentric/Oscillating Depth Wheel and "V" Wheel

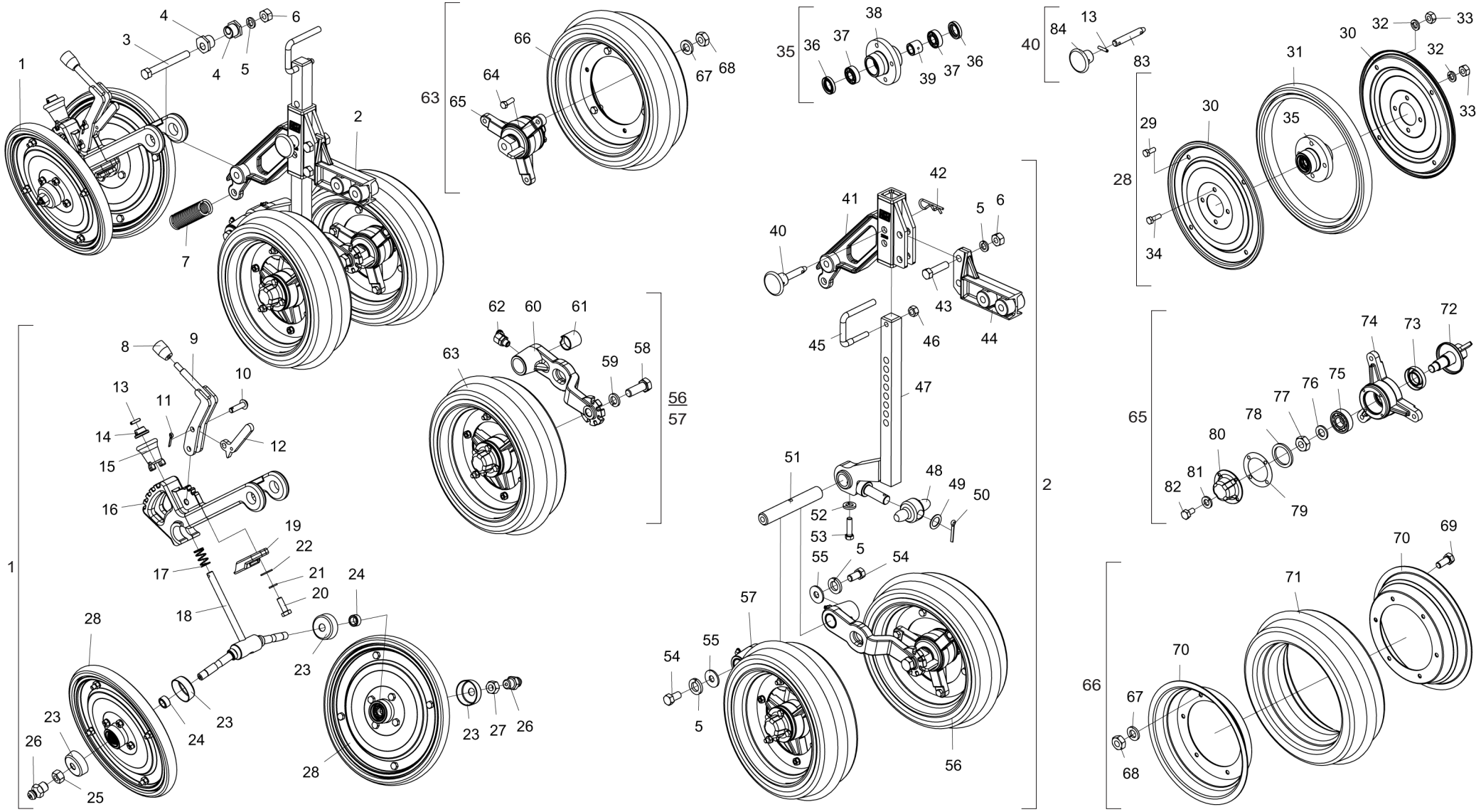

• Table Row of the Eccentric/Oscillating Depth Wheel and "V" Wheel

Item	Code	Product description	All
1	5530014335-0	Complete Support "V" Wheel	1
2	5124010556-3	Row Of Excentric Depth Wheel And Oscilating	1
3	6020311066-1	Hexagonal Head Bolt 1/2" X 4.1/2" 12F W Gr5 Rp	1
4	5080010945-8	Adjustment Excentric Bushing Compactor Wheel	2
5	6020010410-5	Pressure Washer 1/2" Media Industry	5
6	6020310754-7	Hexagonal Nut 1/2" 12F W Gr5 Ch.7/8" Height 12,00mm	3
7	6020250318-0	Helical Spring Ø23 X Ø31 X 106mm	1
8	6020430203-3	Handle Pma 330 Thread 3/8" X 16 Fios	1
9	5008010224-8	Adjustment Handle Of Pressure Spring	1
10	6020311241-9	French Head Pin Ø9,8 X 33mm	2
11	6020050099-0	Cotterpin 1/8" X 3/4"	2
12	5558010358-7	Adjustment Lock Of Handle	1
13	6020310502-1	Heavy Elastic Pin Ø5 X 24mm	1
14	5080010423-5	Bushing Of Handle	1
15	5468010289-1	Wheel Handle "V"	1
16	5530016410-1	Articulation Support Of "V" Wheel	1
17	6020250233-7	Helical Spring Ø16,8 X Ø20 X 34mm	1
18	5232011186-2	Shaft Of Wheel Type "V" Regulating	1
19	6010602527-7	Fixation Lock Of Wheel Type "V"	1
20	6020317475-9	Hexagonal Head Bolt M10 X 1,50 X 30mm Cl8.8 Rt	2
21	6020010394-0	Pressure Washer M10 Media	2
22	5024010075-1	Smooth Washer Ø10,3 X Ø25 X 2,00mm	2
23	6020059512-5	Hub Cap	4
24	5080020710-7	Bushing Of Ø15 X Ø22,22 X 12mm	4
25	6020310736-9	Hexagonal Nut 9/16" 18F Unf Gr5 Ch.7/8" Height 12,50mm	1
26	6020130100-1	Grease Fitting 1/4"	2
27	6020310737-7	Hexagonal Nut 9/16" 18F Rf/Esq Unf Gr5 Ch.7/8" Height 12,50mm	1
28	5498090024-2	Spare Compaction Wheel	2
29	6020311269-9	Hexagonal Head Bolt M8 X 1,25 X 20mm Cl8.8 Rt	4
30	5288020025-9	Wheel Ring	2
31	6020010808-9	Rim 300 X 25mm	1
32	6020010004-5	Pressure Washer M8 Media	8
33	6020310454-8	Hexagonal Nut M8 X 1,25 Ma Cl8 Ch.13mm H.6,50mm	8
34	6020310448-3	Hexagonal Head Bolt M8 X 1,25 X 25mm Cl8.8 Rt	4
35	5204110018-4	Complete Hub Of Wheel	1
36	6020350211-0	Retainer Ø22,00 X Ø35,00 X 6,70mm	2
37	6020350871-1	Sphere Rigid Bearing 6202 (Skf-Nsk-Timken)	2
38	5204110017-6	Wheel Hub	1
39	5080020655-0	Bushing Of Ø16 X Ø25 X 22mm	1
40	5558010360-9	Base Lock	1
41	5530014349-0	Oscillant Wheel Support	1
42	6020390294-0	Lock Nma - Type "R" Ø3,5 X 67mm(Special)	1
43	6020310049-6	Hexagonal Head Bolt 1/2" X 2" 12F W Gr5 Rp	2
44	5530014350-3	Regulator Support Of Oscilating Wheel	1
45	5468010295-6	Handle	1

Item	Code	Product description	All
46	6020317554-2	Torque Hexagonal Nut3/8" 16F Unc Ch.9/16" H.9,00mm (White Zinc)	1
47	5530014352-0	Depth Regulator Wheel Support	1
48	5232011234-6	Regulating Shaft	1
49	5024010160-0	Smooth Washer Ø20 X Ø31 X 1,21mm	1
50	6020050106-6	Cotterpin 3/16" X 1.1/2"	1
51	5232011189-7	Shaft Ø1" X 161mm	1
52	6020010406-7	Pressure Washer 3/8" Media Industry	1
53	6020311029-7	Hexagonal Head Bolt 3/8" X 1.1/2" 16F Unc1A Gr5 Rt	1
54	6020311045-9	Hexagonal Head Bolt 1/2" X 1" 12F W Gr5 Rt	2
55	5024010068-9	Smooth Washer Ø13,3 X Ø35,5 X 3,00mm	2
56	5124010554-7	Right Row Of Depth Wheel	1
57	5124010555-5	Left Row With Universal/Titanium Seed Distributor For Wheel	1
58	6020310179-4	Hexagonal Head Bolt 5/8" X 1.3/4" 11F Unc1A Gr5 Rt	2
59	6020010412-1	Pressure Washer 5/8" Media Industry	2
60	5530016131-5	Wheel Support	2
61	5080010256-9	Bronze Bushing Of Ø25,5 X Ø30,50 X 30,50mm	4
62	6020130104-4	Grease Fitting 1/4"	2
63	5498010154-4	Right Depth Wheel	1
63	5498010155-2	Left Depth Wheel	1
64	6020310038-0	Hexagonal Head Bolt 5/16" X 1" 18F Unc1A Gr5 Rt	6
65	5204010393-7	Complete Right Wheel Hub	1
65	5204010394-5	Complete Left Wheel Hub	1
66	5498010171-4	Convex Depth Wheel	2
67	6020010404-0	Pressure Washer 5/16" Media Industry	9
68	6020310744-0	Hexagonal Nut 5/16" 18F Unc Gr5 Ch.1/2" Height 6,50mm	9
69	6020312020-9	Hexagonal Head Bolt 5/16" X 3/4" 18F Unc1A Gr5 Rt	3
70	5018010022-6	Rubber Wheel Rim	2
71	6020010812-7	Convex Compactation Rim 811/9 103-8	1
72	5232010957-4	Complete Left Shaft Of Row	1
72	5232010948-5	Complete Right Shaft Of Row	1
73	6020350204-7	Retainer Ø25,00 X Ø47,00 X 10,00mm	2
74	5204010228-0	Oscilating Wheel Hub	2
75	6020350867-3	Sphere Rigid Bearing 6204 (Skf-Nsk-Timken)	4
76	5024010154-5	Smooth Washer Ø16 X Ø29 X 3,00mm	2
77	6020310833-0	Hexagonal Nut 5/8" 11F Esq Unc Gr5 Ch.1.1/16" Height 11,00mm	1
77	6020310738-5	Hexagonal Nut 5/8" 11F Unc Gr5 Ch.1.1/16" Height 11,00mm	1
78	5024010330-0	Smooth Washer Ø38,8 X Ø50,2 X 4,00mm	2
79	6020190098-3	Gascket Ø50,3 X Ø73,5 X 1/64"	2
80	6020050640-8	Hub Cap	2
81	6020010402-4	Pressure Washer 1/4" Media Industry	8
82	6020311000-9	Hexagonal Head Bolt 1/4" X 1/2" 20F Unc1A Gr5 Rt	8
83	5432010356-0	Lock Pin Of Base	1
84	6020250482-8	Knop 1/2"	1

• Row of Wheel Flat/Concave/Convex Compactor (Optional)

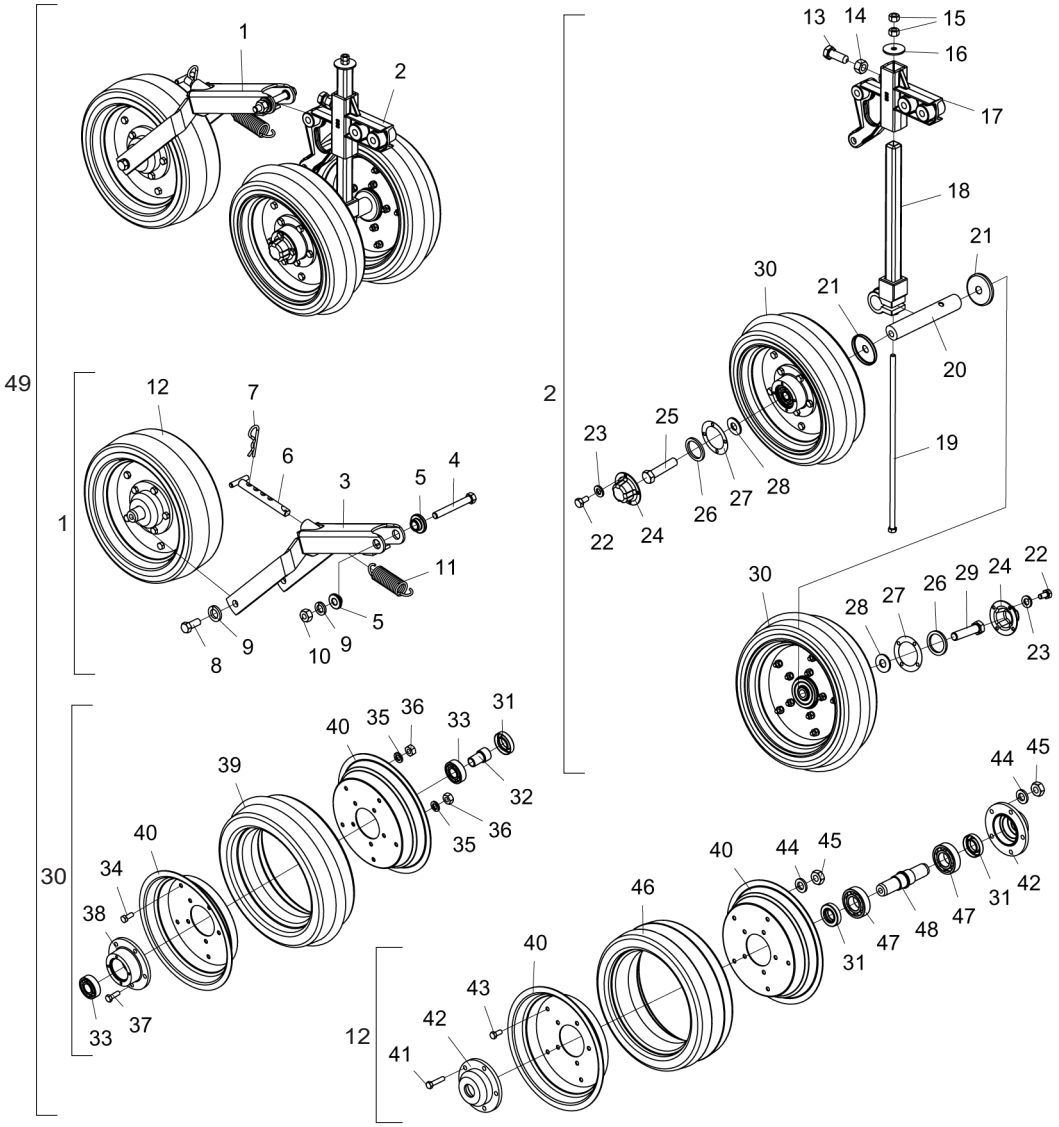

Item	Code	Product description	All	Plain	Concave	Convex
1	5124010110-0	Row Of Plain Compactation Wheel		1		
1	5124080045-8	Row Of Concave Compactation Wheel			1	
1	5124080044-0	Row Of Concave Compactation Wheel				1
2	5124080050-4	Row Of Depth Wheel With Regulating Support	1			
3	5530180056-7	Small Oscilating Support	1			
4	6020311065-3	Hexagonal Head Bolt 1/2" X 4" 12F W Gr5 Rp	1			
5	5080020484-1	Bushing Of Ø13,1 X Ø31,5 X 12,5mm	2			
6	5432060014-9	Handle 5/8" X 131mm	1			
7	6020390308-4	Lock Nma - Type "R" Ø4,5 X 80mm	1			
8	6020310051-8	Hexagonal Head Bolt 1/2" X 1.1/4" 12F W Gr5 Rt	2			
9	6020010410-5	Pressure Washer 1/2" Media Industry	3			
10	6020310754-7	Hexagonal Nut 1/2" 12F W Gr5 Ch.7/8" Height 12,00mm	1			
11	6020250317-1	Helical Spring Ø23 X Ø31 X 88mm	1			
12	5498030089-0	Complete Plain Compaction Wheel		1		
12	5498100098-9	Complete Compaction Wheel Convex			1	
12	5498100018-0	Complete Compaction Wheel Concav				1
13	6020311069-6	Hexagonal Head Bolt 5/8" X 1.3/4" 11F Unc1A Gr5 Rt Wth Point	1			
14	6020310765-2	Hexagonal Nut 5/8" 11F Unc Gr5 Ch.15/16" Height 14,00mm	1			
15	6020310746-6	Hexagonal Nut 3/8" 16F Unc Gr5 Ch.9/16" Height 8,50mm	2			
16	5024010206-1	Smooth Washer Ø10,6 X Ø44 X 3,00mm	1			
17	5530180108-3	Support Of Regulator	1			
18	5484040022-3	Depth Regulator	1			
19	6020311039-4	Hexagonal Head Bolt 3/8" X 15.1/2" 16F Unc1A Gr2 Rp	1			
20	5232020121-7	Shaft Ø1.1/4" X 190mm	1			
21	5096010031-7	Cap Ø16 X Ø63,6 X 7,6mm	2			
22	6020311000-9	Hexagonal Head Bolt 1/4" X 1/2" 20F Unc1A Gr5 Rt	8			
23	6020010402-4	Pressure Washer 1/4" Media Industry	8			
24	6020050640-8	Hub Cap	2			
25	6020310292-8	Hexagonal Head Bolt 5/8" X 2.3/4" 11F Unc1A Gr5 Rp Rosca Direita	1			
26	5024010330-0	Smooth Washer Ø38,8 X Ø50,2 X 4,00mm	2			
27	6020190098-3	Gascket Ø50,3 X Ø73,5 X 1/64"	2			
28	5024010239-8	Smooth Washer Ø16,5 X Ø37 X 3,00mm	2			
29	6020310293-6	Hexagonal Head Bolt 5/8" X 2.3/4" 11F Unc1A Gr5 Rp Rosca Esquerda	1			
30	5498100047-4	Small Compaction Wheel	2			
31	6020350204-7	Retainer Ø25,00 X Ø47,00 X 10,00mm	3			
32	5080010146-5	Bushing Of Ø16 X Ø26 X 44mm	1			
33	6020350867-3	Sphere Rigid Bearing 6204 (Skf-Nsk-Timken)	2			
34	6020311269-9	Hexagonal Head Bolt M8 X 1,25 X 20mm Cl8.8 Rt	5			
35	6020010004-5	Pressure Washer M8 Media	10			
36	6020310454-8	Hexagonal Nut M8 X 1,25 Ma Cl8 Ch.13mm H.6,50mm	10			
37	6020310448-3	Hexagonal Head Bolt M8 X 1,25 X 25mm Cl8.8 Rt	5			
38	5204010174-8	Compactation Wheel Hub	1			
39	6020010812-7	Convex Compactation Rim 811/9 103-8	1			
40	5018010016-1	Rubber Wheel Rim	4			
41	6020311017-3	Hexagonal Head Bolt 5/16" X 1.1/2" 18F Unc Gr2 Rt	5			
42	5204020047-9	Wheel Hub	2			
43	6020312020-9	Hexagonal Head Bolt 5/16" X 3/4" 18F Unc1A Gr5 Rt	5			
44	6020010404-0	Pressure Washer 5/16" Media Industry	10			
45	6020310744-0	Hexagonal Nut 5/16" 18F Unc Gr5 Ch.1/2" Height 6,50mm	10			
46	6020010803-8	Compactation Rim		1		
46	6020010813-5	Convex Compactation Rim 99-8			1	
46	6020010812-7	Convex Compactation Rim 811/9 103-8				1
47	6020350007-9	Bearing 6206(Skf-Nsk-Timken)	2			
48	5080030028-0	Large Bushing Of Compactor Wheel	1			
49	5124010113-4	Complete Row Of Plain Compactation Wheel	1			
49	5124010341-2	Complete Row Of Convex Compactation Wheel	1			
49	5124010051-0	Complete Row Of Concave Compactation Wheel	1			

• Slap Wheel Groove

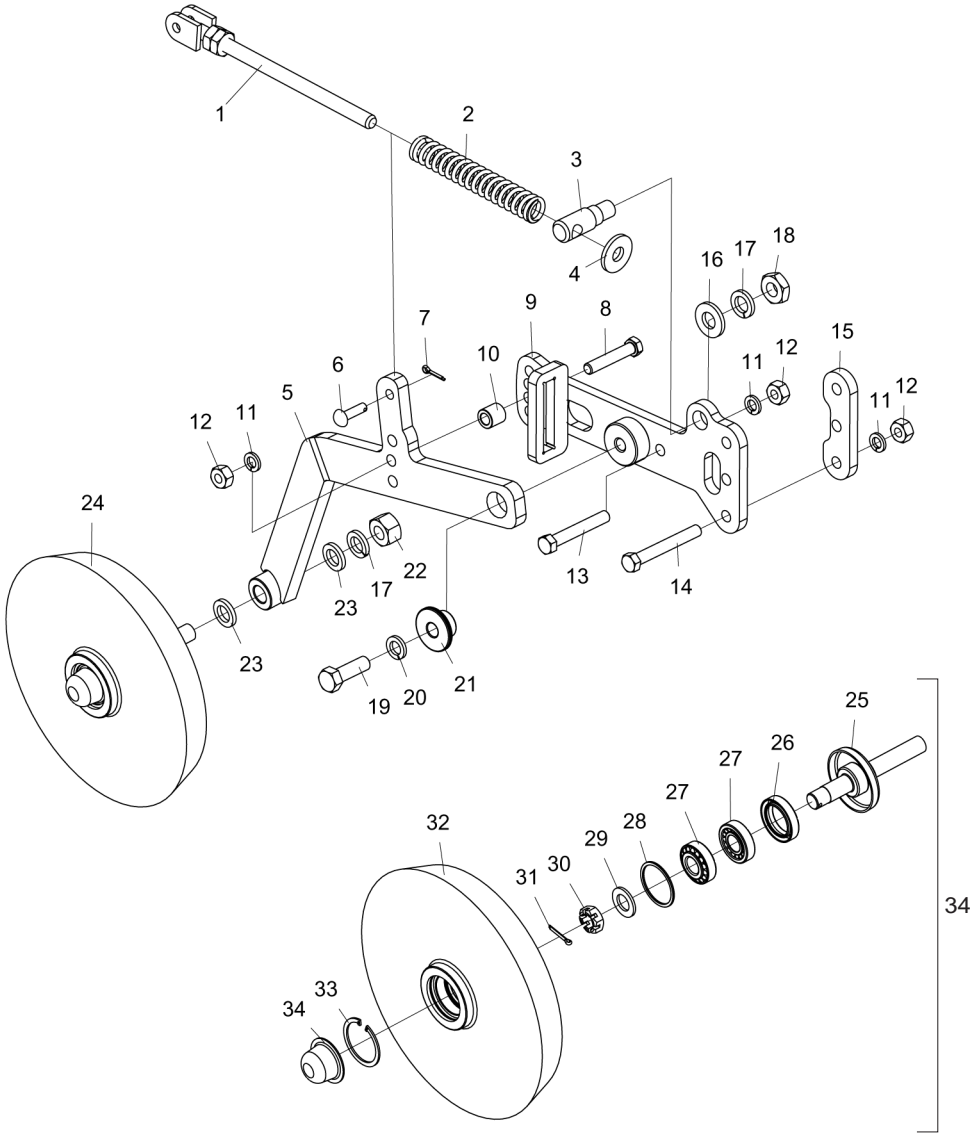

Item	Code	Product description	All	Right	Left
1	5566010198-4	Rod Spring	1		
2	6020250288-4	Helical Spring Ø20,5 X Ø30 X 180mm	1		
3	5432010365-0	Articulation Pin	1		
4	5024010298-3	Smooth Washer Ø17 X Ø44 X 4,75mm	1		
5	5530014410-0	Right Support (Spe)		1	
5	5530014411-9	Left Support Of Wheel (Spe)			1
6	6020311241-9	French Head Pin Ø9,8 X 33mm	1		
7	6020050099-0	Cotterpin 1/8" X 3/4"	1		
8	6020311058-0	Hexagonal Head Bolt 1/2" X 2.3/4" 12F W Gr5 Rp	1		
9	5530014412-7	Right Support		1	
9	5530014413-5	Left Support			1
10	5080010681-5	Bushing Ø13 X Ø7/8" X 22mm	1		
11	6020010410-5	Pressure Washer 1/2" Media Industry	4		
12	6020310754-7	Hexagonal Nut 1/2" 12F W Gr5 Ch.7/8" Height 12,00mm	4		
13	6020311061-0	Hexagonal Head Bolt 1/2" X 3.1/2" 12F W Gr5 Rp	1		
14	6020311065-3	Hexagonal Head Bolt 1/2" X 4" 12F W Gr5 Rp	2		
15	5136013570-9	Plate	1		
16	5024010169-3	Smooth Washer Ø19,5 X Ø40 X 4,75mm(Galvanised)	1		
17	6020010414-8	Pressure Washer 3/4" Media Industry	2		
18	6020310784-9	Hexagonal Nut 3/4" 10F Unc Gr5 Ch.1.1/4" Height 11,00mm	1		
19	6020310180-8	Hexagonal Head Bolt 5/8" X 2" 11F Unc1A Gr5 Rp	1		
20	6020010412-1	Pressure Washer 5/8" Media Industry	1		
21	5080011515-6	Bushing Of Ø16,5 X Ø2" X 22,5mm	1		
22	6020310817-9	Hexagonal Nut 3/4" 16F Unf Gr5 Ch.1.1/4" Height 18,50mm	1		
23	5024010302-5	Smooth Washer Ø20 X Ø32 X 4,75mm	4		
24	5498010049-1	Complete Iron Compaction Wheel	1		
25	5232010977-9	Complete Shaft Of Steel Compactation Wheel	1		
26	6020350268-3	Retainer Ø36,00 X Ø52,00 X 11,00mm	1		
27	6020350087-7	Bearing 30204	2		
28	6020010095-9	Gascket Ring 047X 052X 2mm	1		
29	6020010513-6	Plain Washer Ø20 X Ø35 X 3mm	1		
30	6020310797-0	Nut 3/4" 16F Unf Gr5 Ch.1.1/16" Height 13,00mm	1		
31	6020050101-5	Cotterpin 1/8" X 1"	1		
32	5288010049-1	Ring Of Compactor Wheel	1		
33	6020010289-7	Retaining Ring I-55	1		
34	6020050641-6	Hub Cap	1		

• Lines with Double Fertilizer Disc (SPE) and with 18" Turbo Cutting Disc

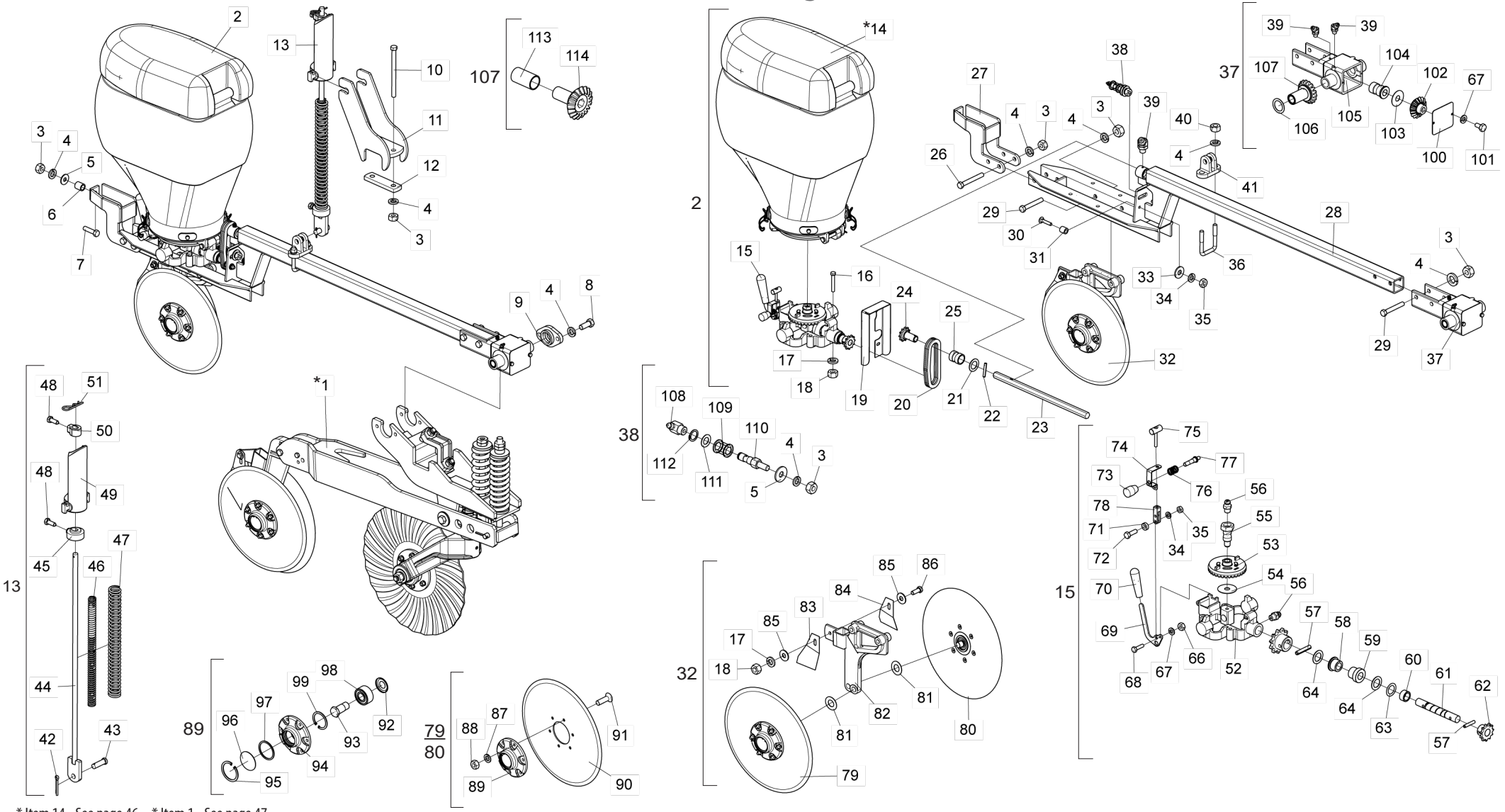

* Item 14 - See page 46 * Item 1 - See page 47

BALDAN

• Table Lines with Double Fertilizer Disc (SPE) and with 18”Turbo Cutting Disc

Item	Code	Product description	All	Larger Left	Smal l Right
*1	5124018101-4	Complete Right Fertilizer Cart (Double Disc) and 18”Turbo Cutting Disc		1	
*1	5124018099-9	Smaller Left Fertilizer Cart Complete (Double Disc) With 18”Turbo Cutting Disc			1
2	5124010508-3	Left Row Of Seed		1	
2	5124010512-1	Right Row Of Seed			1
3	6020310754-7	Hexagonal Nut 1/2" 12F W Gr5 Ch.7/8" Height 12,00mm		8	10
4	6020010410-5	Pressure Washer 1/2" Media Industry		14	16
5	5024010068-9	Smooth Washer Ø13,3 X Ø35,5 X 3,00mm	3		
6	5080020159-1	Bushing Of Ø13 X Ø19 X 21mm	1		
7	6020310049-6	Hexagonal Head Bolt 1/2" X 2" 12F W Gr5 Rp	1		
8	6020310051-8	Hexagonal Head Bolt 1/2" X 1.1/4" 12F W Gr5 Rt	4		
9	5080010855-9	Row Support Fixation Bushing	2		
10	6020310204-9	Hexagonal Head Bolt 1/2" X 7" 12F W Gr5 Rp	2		
11	5530012361-8	Support Of Spring Rod	1		
12	5136013228-9	Support Plate	1		
13	5566010181-0	Complete Spring Rod	1		
14	5092010342-9	Seed Hopper 45 Litros Complete(Red Ral-3020) Universal System	1		
15	5044010465-4	Seed Distributor Base(2021)	1		
16	6020311037-8	Hexagonal Head Bolt 3/8" X 2.1/2" 16F Unc1A Gr2 Rp	4		
17	6020010406-7	Pressure Washer 3/8" Media Industry	5		
18	6020310746-6	Hexagonal Nut 3/8" 16F Unc Gr5 Ch.9/16" Height 8,50mm	5		
19	5106010132-2	Chain Cover	1		
20	6020050318-2	Chain (Asa 40) 29 Links + Amendment	1		
21	5024010502-8	Pinion Washer	1		
22	6020310501-3	Heavy Elastic Pin Ø5 X 32mm	1		
23	5232011098-0	Hexagonal Shaft 1/2" X 1480mm		1	
23	5232011115-3	Hexagonal Shaft 1/2" X 1280mm			1
24	5428010038-5	Pinion Of 11 Teeth	1		
25	5080010854-0	Bushing Of Ø22 X Ø28 X 32mm	1		
26	6020311065-3	Hexagonal Head Bolt 1/2" X 4" 12F W Gr5 Rp			2
27	5530012369-3	Complete Support Of Row Of Rows			1
28	5530012338-3	Support Of Large Seed Row		1	
28	5530012359-6	Support Of Small Seed Row			1
29	6020311061-0	Hexagonal Head Bolt 1/2" X 3.1/2" 12F W Gr5 Rp	4		
30	6020311168-4	French Head Bolt 5/16" X 1.1/2" 18F Unc1A Gr2 Rp	2		
31	5080010845-1	Bushing Of Ø10,3 X Ø5/8" X 16mm(Galvanised)	2		
32	5124010507-5	Left Row Of Seed Double Disc (15")		1	
32	5124010510-5	Right Row Of Seed Double Disc (15")			1
33	5024010073-5	Smooth Washer Ø8,5 X Ø20 X 2,00mm	2		
34	6020010404-0	Pressure Washer 5/16" Media Industry	3		
35	6020310744-0	Hexagonal Nut 5/16" 18F Unc Gr5 Ch.1/2" Height 6,50mm	3		
36	5068010081-8	Clamp Of 84 X 64 X R.1/2" W	1		
37	5092010526-0	Gear Box(Speed Box)	1		

Item	Code	Product description	All	Larger Left	Smal l Right
38	5268010741-6	Complete Small Chain Stretcher	1		
39	6020130104-4	Grease Fitting 1/4"	3		
40	6020310756-3	Hexagonal Nut 1/2" 12F W Gr5 Ch.3/4" Height 11,00mm	2		
41	6010601172-1	Lower Support Of Rod (Small)	1		
42	6020050101-5	Cotterpin 1/8" X 1"	1		
43	6020310593-5	Pin Ø5/8”X 46mm	1		
44	5566010183-6	Rod Spring	1		
45	5530016364-4	Lower Support Of Triple Spring	1		
46	6020250297-3	Helical Spring Ø17,5 X Ø25,5 X 400mm Internal	1		
47	6020250298-1	Helical Spring Ø30,5 X Ø41,5 X 400mm	1		
48	6020310349-5	Hexagonal Head Bolt M12 X 1,75 X 30mm Cl8.8 R Wth Point	2		
49	6010601285-0	Support Of Spring Rod	1		
50	5080011663-2	Fixation Support Of Spring Rod	1		
51	6020390294-0	Lock Nma - Type "R" Ø3,5 X 67mm(Special)	1		
52	5530018428-5	Seed Dispenser Base Bracket(2021)	1		
53	5164010022-6	Crown Of 33 Teeths	1		
54	6020010427-0	Plain Washer Ø14 X Ø50 X 1,21mm	2		
55	5232010521-8	Shaft Of Crown And Pinion Fixation	1		
56	6020130100-1	Grease Fitting 1/4"	2		
57	6020310488-2	Heavy Elastic Pin Ø6 X 32mm	2		
58	5080012201-2	Smaller Bronze Bushing	1		
59	5080012202-0	Larger Bronze Bushing	1		
60	5080020856-1	Bushing Ø20 X Ø28 X 15mm	1		
61	5232012520-0	Shaft Streaming	1		
62	5428020016-9	Pinion Of 11 Teeth	1		
64	5024010160-0	Smooth Washer Ø20 X Ø31 X 1,21mm	2		
65	5428010055-5	Pinion 15 Teeths	1		
66	6020310742-3	Hexagonal Nut 1/4" 20F Unc Gr5 Ch.7/16" Height 5,50mm	1		
67	6020010402-4	Pressure Washer 1/4" Media Industry	3		
68	6020310019-4	Hexagonal Head Bolt 1/4" X 1" 20F Unc1A Gr2 Rt	1		
69	5008010234-5	Lock Handle Of Seed Distributor Base	1		
70	6020050724-2	Rubber Cable	1		
71	5080010408-1	Articulation Bushing Of Lock	1		
72	6020310038-0	Hexagonal Head Bolt 5/16" X 1" 18F Unc1A Gr5 Rt	1		
73	6020430203-3	Handle Pma 330 Thread 3/8" X 16 Fios	1		
74	5530014927-7	Support Of Spring	1		
75	5432010450-8	Lock Pin	1		
76	6020250577-8	Helical Spring Ø12,5 X Ø16,5 X 19mm	1		
77	5432010449-4	Lock Pin Of Hopper	1		
78	5530014935-8	Adjustment Support Of Lock	1		
79	5204010458-5	Complete Right Hub (Coulter Disc Blade 15" X 4,00mm)	1		
80	5204010459-3	Complete Left Hub (Plain Disc 15" X 4,00mm)	1		

• Table Lines with Double Fertilizer Disc (SPE) and with 18" Turbo Cutting Disc

Item	Code	Product description	All	Larger Left	Smal l Right
81	5024010024-7	Smooth Washer Ø20 X Ø38 X 1,21mm	4		
82	5530011790-1	Support Of Left Seed Double Disc		1	
82	5530011791-0	Right Seed Double Disc Support			1
83	5352030047-0	Right Scraper Of Discs	1		
84	5352030048-8	Left Scraper Of Discs	1		
85	5024010075-1	Smooth Washer Ø10,3 X Ø25 X 2,00mm	2		
86	6020310054-2	Hexagonal Head Bolt 3/8" X 1" 16F Unc1A Gr2 Rt	1		
87	6020010004-5	Pressure Washer M8 Media	6		
88	6020310454-8	Hexagonal Nut M8 X 1,25 Ma Cl8 Ch.13mm H.6,50mm	6		
89	5204010451-8	Right Disc Hub	1		
89	5204010452-6	Left Disc Hub	1		
90	2857397276-9	Coulter Plain Disc Blade 15 X 4,00 Hc Rd 80mm + 6H Rd 8,7mm D=115mm Single Bevel	1		
91	6020317573-9	Allen Bolt M8 X 1,25 X 25mm Cl12.9 RT	6		
92	6020056005-4	Dual Ball Races Bearing Cap 5204Kp52-Sp6 (1ºline)	1		
93	5420010098-3	Hexagonal Head Bolt 3/4" X 1.7/8" 16F Unf 1A Gr5 Rp - Read Right (Special)	1		
93	5420010099-1	Hexagonal Head Bolt 3/4" X 1.7/8" 16F Unf 1A Gr5 Rp - Read Left (Special)	1		
94	5204010453-4	Hub Of Ø136 X 41mm	1		
95	6020010289-7	Retaining Ring I-55	1		
96	5096010050-3	Hub Cap	1		
97	6020010095-9	Gascket Ring 047X 052X 2mm	1		
98	6020350933-5	Sphere Bearing Double Row 5204Kp52-Sp6(1º Line)	1		
99	6020011053-9	Retaining Ring I-047	1		
100	5538014695-8	Gear Box Cover	1		
101	6020311000-9	Hexagonal Head Bolt 1/4" X 1/2" 20F Unc1A Gr5 Rt	2		
102	5428010037-7	Pinion Of 16 Teeth	1		
103	5024010051-4	Smooth Washer Ø16 X Ø44 X 1,21mm	1		
104	5080010853-2	Bushing Of Ø1.1/8" X 38mm W/Hexagonal Hole For Shaft De 1/2"	1		
105	5092010337-2	Gear Left Box	1		
106	5024010057-3	Smooth Washer Ø29,5 X Ø41 X 1,21mm	1		
107	5428010044-0	Pinion Of 18 Teeth With Bronze Bushing Ø28,4mm	1		
108	6020130112-5	Grease Fitting 1/8"	1		
109	5506010033-0	Roller Of Stretcher	1		
110	5232011116-1	Small Stretcher Shaft	1		
111	5024010059-0	Smooth Washer Ø16,5 X Ø29 X 1,21mm	1		
112	6020010252-8	Retaining Oring	1		
113	5080010242-9	Bronze Bushing Of Ø24 X Ø28,4 X 49mm	1		
114	6020310511-0	Pinion 18 Teeth	1		

• Seed Discs - Optional

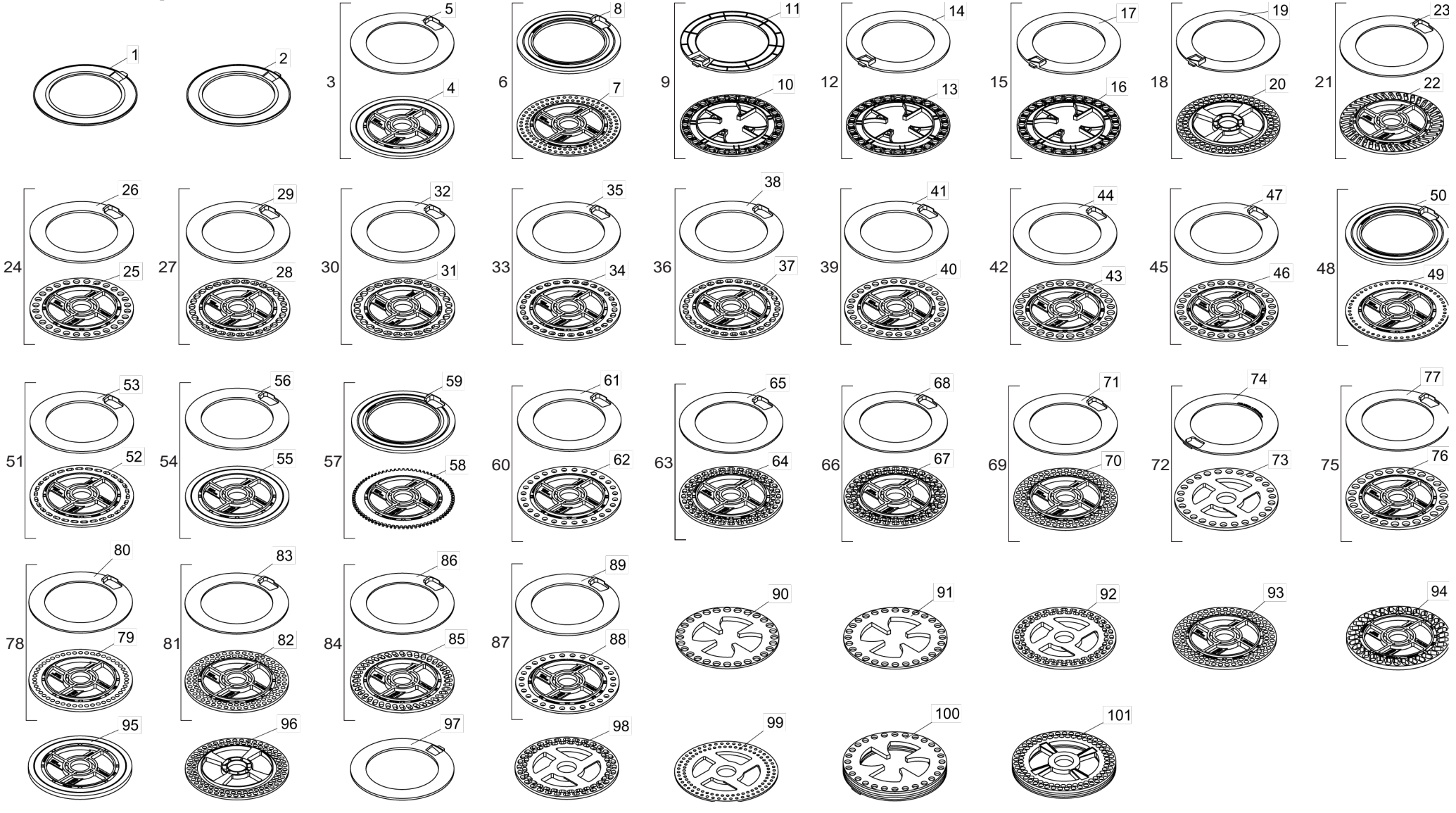

• Table Seed Discs - Optional

Item	Code	Product description
1	6020015812-4	Soy Ring Mod U 3mm C/Rebajo 0,8mm (Purple) (1020021)
2	6020015813-2	Soy Ring Mod U 4mm C/Rebajo 1mm (Light Orange) (1020024)
3	5220010131-6	Distribuitor Disc Without Hole (Ø35,5 X Ø189 X 5,50mm) With Ring Of 3,00mm(Universal)
4	6020070123-5	Distributor Disc Cego (Ø35,5 X Ø189 X 5,50mm) (Universal)
5	6020070108-1	Ring Ø131,5 X Ø189 X 3,00mm S/Rebajo
6	5220010104-9	Sorghum Distributor Disc 100F Ø5mm(Ø35,5 X Ø189 X 3,00mm) With Ring 5,50mm
7	6020070136-7	Sorgum Distributor Disc 100H Ø5mm (Ø35,5 X Ø189 X 3,00mm) (Universal)
8	6020070109-0	Ring Ø131,5 X Ø189 X 5,50mm With Lock For Sorgum
9	5220010137-5	Maize Distributor Disc 28F Ø11,5mm(Ø189 X 4,00mm)With Ring 4,00mm
10	6020071798-0	Maize Distribitor Disc 28H Ø11,5mm (Ø189 X 4,00mm) Rampflow (Light Green)
11	6020015815-9	Maize Ring Mod U 4mm Plain (Yellow) (1020016)
12	5220010138-3	Maize Distributor Disc 28F Ø12,5mm(Ø189 X 4,00mm)With Ring 4,00mm
13	6020071799-9	Maize Distribitor Disc 28H Ø12,5mm (Ø189 X 4,00mm) Rampflow (Light Blue)
14	6020015809-4	Maize Ring Mod U 4mm C/Rebajo 1mm(Green)(1020017)
15	5220010139-1	Maize Distributor Disc 28F Ø13,5mm(Ø189 X 4,00mm)With Ring 4,00mm
16	6020071800-6	Maize Distribitor Disc 28H Ø13,5mm (Ø189 X 4,00mm) Rampflow (Beige)
17	6020015814-0	Maize Ring Mod U 4mm C/Rebajo 2,5mm(Blue)(1020019)
18	5220010141-3	Soy Deam Distributor Disc 90F Ø9mm(Ø35,10 X Ø189 X 5,50mm)With Ring 3,00mm
19	6020015811-6	Soy Ring Mod U 3mm Liso (Lilac) (1020020)
20	6020071802-2	Soy Deam Distributor Disc 90H Ø9mm (Ø35,10 X Ø189 X 5,50mm) Rampflow (Lilac)
		Optional
21	5220010129-4	Rice Distributor Disc 40F 6,5 X 19,5mm(Ø35,5 Ø189 X 5,50mm) With Ring 3,00mm
22	6020070940-6	Rice Distributor Disc 40H 6,5 X 19,5mm(Ø35,5 X Ø189 X 5,50mm)(Universal)
23	6020070108-1	Ring Ø131,5 X Ø189 X 3,00mm S/Rebajo
24	5220010103-0	Maize Distributor Disc 28F Ø11,5mm(Ø35,5 X Ø189 X 4,50mm)With Ring 4,00mm
25	6020070165-0	Maize Distribitor Disc 28H Ø11,5mm (Ø35,5 X Ø189 X 4,50mm) (Universal)
26	6020070107-3	Ring Ø131,5 X Ø189 X 4,00mm C/Rebajo
27	5220010111-1	Maize Distributor Disc 30F 10 X 14,5mm(Ø35,5 X Ø189 X 4,50mm)With Ring
28	6020070126-0	Maize Distribitor Disc 30H 10 X 14,5mm (Ø35,5 X Ø189 X 4,50mm) (Universal)
29	6020070107-3	Ring Ø131,5 X Ø189 X 4,00mm C/Rebajo
30	5220010112-0	Maize Distributor Disc 28F 11 X 15,5mm(Ø35,5 X Ø189 X 4,50mm)With Ring
31	6020070127-8	Maize Distribitor Disc 28H 11 X 15,5mm (Ø35,5 X Ø189 X 4,50mm) (Universal)
32	6020070107-3	Ring Ø131,5 X Ø189 X 4,00mm C/Rebajo
33	5220010113-8	Maize Distributor Disc 30F 8,5 X 12mm(Ø35,5 X Ø189 X 4,50mm)With Ring 4,00mm
34	6020070128-6	Maize Distribitor Disc 30H 8,5 X 12mm (Ø35,5 X Ø189 X 4,50mm) (Universal)
35	6020070107-3	Ring Ø131,5 X Ø189 X 4,00mm C/Rebajo
36	5220010114-6	Maize Distributor Disc 30F 9 X 13,5mm(Ø35,5 X Ø189 X 4,50mm)With Ring 4,00mm
37	6020070129-4	Maize Distribitor Disc 30H 9 X 13,5mm (Ø35,5 X Ø189 X 4,50mm) (Universal)
38	6020070107-3	Ring Ø131,5 X Ø189 X 4,00mm C/Rebajo
39	5220010116-2	Maize Distributor Disc 30F Ø11,5mm(Ø35,5 X Ø189 X 4,50mm)With Ring 4,00mm
40	6020070131-6	Maize Distribitor Disc 30H Ø11,5mm (Ø35,5 X Ø189 X 4,50mm) (Universal)
41	6020070107-3	Ring Ø131,5 X Ø189 X 4,00mm C/Rebajo
42	5220010118-9	Maize Distributor Disc 28F Ø13,5mm(Ø35,5 X Ø189 X 4,50mm)With Ring 4,00mm
43	6020070166-9	Maize Distribitor Disc 28H Ø13,5mm (Ø35,5 X Ø189 X 4,50mm) (Universal)
44	6020070107-3	Ring Ø131,5 X Ø189 X 4,00mm C/Rebajo
45	5220010119-7	Maize Distributor Disc 28F Ø12,5mm(Ø35,5 X Ø189 X 4,50mm)With Ring 4,00mm
46	6020070167-7	Maize Distribitor Disc 28H Ø12,5mm (Ø35,5 X Ø189 X 4,50mm) (Universal)
47	6020070107-3	Ring Ø131,5 X Ø189 X 4,00mm C/Rebajo
48	5220010120-0	Sorghum Distributor Disc 50F Ø5mm(Ø35,5 X Ø189 X 3,00mm) With Ring 5,00mm
49	6020070139-1	Sorgum Distributor Disc 50H Ø5mm (Ø35,5 X Ø189 X 3,00mm) (Universal)
50	6020070107-3	Ring Ø131,5 X Ø189 X 4,00mm C/Rebajo

Item	Code	Product description
51	5220010123-5	Sunflower Distributor Disc 30F 5,5 X 13,4mm(Ø35,5 X Ø189 X 4,50mm) With Ring
52	6020070125-1	Sunflower Distribitor Disc 30H 5,5 X 13,4mm (Ø35,5 X Ø189 X 4,50mm) (Universal)
53	6020070107-3	Ring Ø131,5 X Ø189 X 4,00mm C/Rebajo
54	5220010132-4	Distribuitor Disc Without Hole (Ø35,5 X Ø189 X 4,00mm) Universal
55	6020070081-6	Distributor Disc Cego (Ø35,5 X Ø189 X 4,00mm) (Universal)
56	6020070107-3	Ring Ø131,5 X Ø189 X 4,00mm C/Rebajo
57	5220010127-8	Disco Distributor De Canola/Sorgo 76F Ø5mm(Ø35,5 X Ø186 X 3,00mm)W/Anel De 5,50mm(Universal)
58	6020070138-3	Canola/Sorgum Distributor Disc 76H Ø5mm (Ø35,5 Ø186 X 3,00mm) (Universal)
59	6020070110-3	Ring Ø131,5 X Ø189 X 4,00mm S/Rebajo
60	5220010133-2	Maize Distributor Disc 28F Ø9,00mm(Ø35,5 X Ø189 X 4,50mm) With Ring 4,00mm
61	6020071725-5	Maize Distribitor Disc 28H Ø9,00mm (Ø35,5 X Ø189 X 4,50mm) (Universal)
62	6020070110-3	Ring Ø131,5 X Ø189 X 4,00mm S/Rebajo
63	5220010128-6	Cotton Distributor Disc 64F 7 X 12mm(Ø35,5 X Ø189 X 5,50mm) With Ring
64	6020070939-2	Cotton Distributor Disc 64F 7 X 12mm (Ø35,5 X Ø189 X 5,50mm) (Universal)
65	6020070108-1	Ring Ø131,5 X Ø189 X 3,00mm S/Rebajo
66	5220010121-9	Bean Distributor Disc 64F 8 X 12,5mm(Ø35,5 X Ø189 X 5,50mm)W/Anel De 3,00mm
67	6020070124-3	Beam Distributor Disc 64H 8 X 12,5mm (Ø35,5 X Ø189 X 5,50mm) (Universal)
68	6020070108-1	Ring Ø131,5 X Ø189 X 3,00mm S/Rebajo
69	5220010126-0	Soy Deam Distributor Disc 90F Ø8mm(Ø35,5 X Ø189 X 5,50mm)With Ring 3,00mm
70	6020070135-9	Soy Deam Distributor Disc 90H Ø8mm (Ø35,5 X Ø189 X 5,50mm) (Universal)
71	6020070108-1	Ring Ø131,5 X Ø189 X 3,00mm S/Rebajo
72	5220010110-3	Maize Distributor Disc 26F Ø12,5mm(Ø35,5 X Ø189 X 5,50mm)With Ring 3,00mm
73	6020070104-9	Maize Distribitor Disc 26H Ø12,5mm (Ø35,5 X Ø189 X 5,50mm) (Universal)
74	6020070108-1	Ring Ø131,5 X Ø189 X 3,00mm S/Rebajo
75	5220010115-4	Maize Distributor Disc 26F Ø13,5mm(Ø35,5 X Ø189 X 5,50mm)With Ring 3,00mm
76	6020070130-8	Maize Distribitor Disc 26H Ø13,5mm (Ø35,5 X Ø189 X 5,50mm) (Universal)
77	6020070108-1	Ring Ø131,5 X Ø189 X 3,00mm S/Rebajo
78	5220010117-0	Maize Distributor Disc 48F Ø7mm(Ø35,5 X Ø189 X 5,50mm)With Ring 3,00mm
79	6020070132-4	Maize Distribitor Disc 48H Ø7mm (Ø35,5 X Ø189 X 5,50mm) (Universal)
80	6020070108-1	Ring Ø131,5 X Ø189 X 3,00mm S/Rebajo
81	5220010124-3	Soy Deam Distributor Disc 90F Ø7mm(Ø35,5 X Ø189 X 5,50mm)With Ring 3,00mm
82	6020070133-2	Soy Deam Distributor Disc 90H Ø7mm (Ø35,5 X Ø189 X 5,50mm) (Universal)
83	6020070108-1	Ring Ø131,5 X Ø189 X 3,00mm S/Rebajo
84	5220010125-1	Soy Distributor Disc 40F 7,5 X 15mm(Ø35,5 X Ø189 X 5,50mm)With Ring 3,00mm
85	6020070134-0	Soy Distributor Disc 40H 7,5 X 15mm (Ø35,5 X Ø189 X 5,50mm) (Universal)
86	6020070108-1	Ring Ø131,5 X Ø189 X 3,00mm S/Rebajo
87	5220010133-2	Maize Distributor Disc 28F Ø9,00mm(Ø35,5 X Ø189 X 4,50mm) With Ring 4,00mm
88	6020071725-5	Maize Distribitor Disc 28H Ø9,00mm (Ø35,5 X Ø189 X 4,50mm) (Universal)
89	6020070110-3	Ring Ø131,5 X Ø189 X 4,00mm S/Rebajo
90	6020071816-2	Maize Distribitor Disc 28H Ø10,5mm (Ø189 X 4,00mm) Rampflow (Rosa)
91	6020071817-0	Maize Distribitor Disc 28H Ø11,0mm (Ø189 X 4,00mm) Rampflow Mod U (Blue)
92	6020071818-9	Maize Distribitor Disc 28H Ø12,0mm (Ø189 X 4,00mm) Rampflow (Orange)
93	6020070135-9	Soy Deam Distributor Disc 90H Ø8mm (Ø35,5 X Ø189 X 5,50mm) (Universal)
94	6020070090-5	Beam Distributor Disc 34H 10,5 X 20mm (Ø35,5 X Ø189 X 8,50mm) (Universal)
95	6020070089-1	Distributor Disc Cego (Ø35,5 X Ø189 X 8,00mm) (Universal)
96	6020071801-4	Soy Deam Distributor Disc 90H Ø8mm (Ø35,10 X Ø189 X 4,50mm) Rampflow (Orange)
97	6020015810-8	Soy Ring Mod U 4mm Plain (Orange) (1020022)
98	6020071820-0	Soy Deam Distributor Disc 90H Ø7,3mm (Ø35,10 X Ø189 X 4,50mm) Rampflow
99	6020075816-7	Soy Ring Mod. "U" 4mm
100	6020056426-2	Titanium Disc/Rings Kit For Soy 90 Holes (1060003)
101	6020056425-4	Titanium Disc/Rings Kit For Maize 28 Holes (1060002)

• PM400 electrical system - Optional

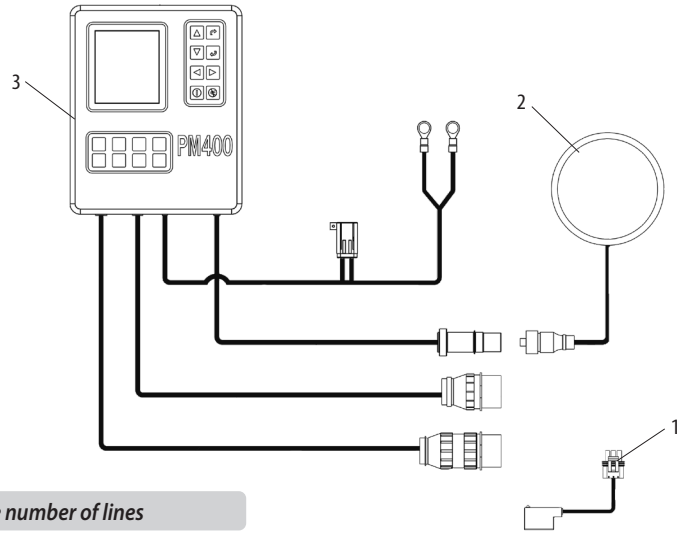

Item	Code	Product description	All
1	6020210057-3	Photoelectric Sensor Kit(030010010))	-
2	6020015870-1	Antenna Gps Agrosystem(040060001)	1
3	6020210065-4	Kit Console Pm400 Unique (010010046)	1

Item 1 quantity is according to the number of lines

• ETD Table - Optional

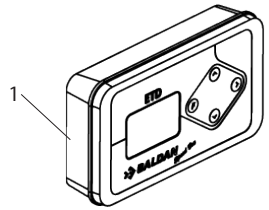

Item	Code	Product description	All
1	6020395116-0	Electronic Dosing Table Etd Baldan Speed Box(303315023)	1

• Stickers - Speed Box

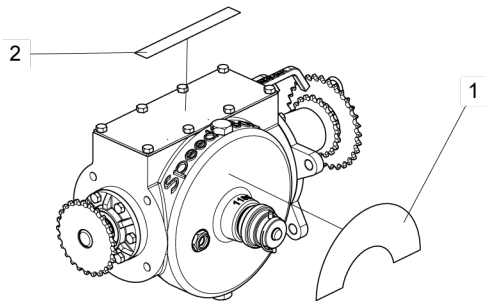

Item	Code	Product description	All
1	6020070838-8	Sticker Speed Box (Easy/Precise/Secure) (200 X 100mm)	1
2	6020070300-9	Sticker For Seed Hopper Speed Box	1
2	6020070301-7	Sticker For Fertilizer Hopper Speed Box	1

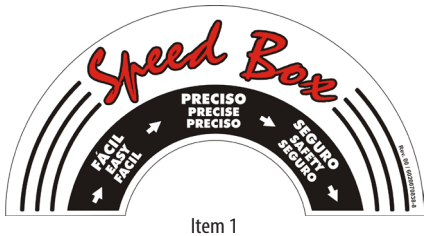

Item 1

Item 2

• Stickers - Line Marker

Item	Code	Product description	All
1	5206010311-9	Sticker Row Marker Warning (180 X 100mm)	1

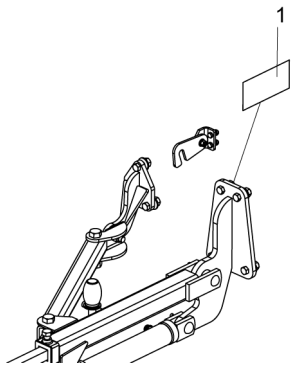

Item 1

• Stickers - Deposit SPE 4000

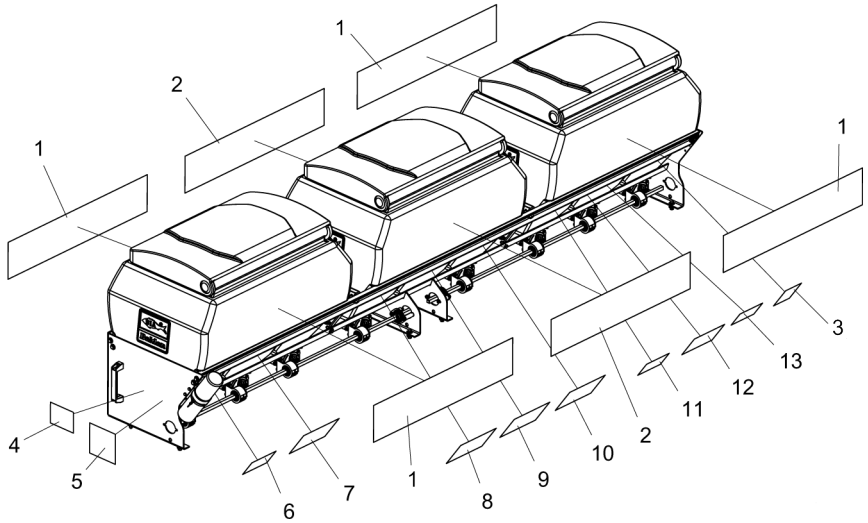

Item	Code	Product description	All
1	6020079883-2	Stickers (Spe Top Line 4000) (920 X 180mm)	4
2	6020079464-0	Stickers Baldan (920 X 180mm)	2
3	5206010278-3	Sticker For Cleaning The Fertilizer Hopper (105 X 130mm)	2
4	5206010309-7	Sticker Platform Warning (107 X 145mm)	1
5	5206010307-0	Sticker Of Gear And Chains Warning (145 X 150mm)	1
6	5206010221-0	Sticker Instruction Manual Warning (100 X 160mm)	1
7	6020071204-0	Sticker Seed Distribution Table 25/20 (Spe-Top Line/Spe-Top Line Flex)	1
8	6020071203-2	Sticker Seed Distribution Table 20/25 (Spe-Top Line/Spe-Top Line Flex)	1
9	6020071201-6	Sticker Fertilizer Distribution Table 20/31 (Spe-Top Line/Spe-Top Line Flex) (155	1
10	6020071202-4	Sticker Fertilizer Distribution Table 31/20 (Spe-Top Line/Spe-Top Line Flex) (155	1
11	5206010310-0	Sticker Disc Warning (150 X 95mm)	1
12	5206010304-6	Sticker Change Of Oil For Speed Box(135 X 200mm)	1
13	5206010308-9	Sticker Hydraulic Hoses Warning(150 X 95mm)	1

Item 1

Item 2

Item 3

Item 4

Item 5

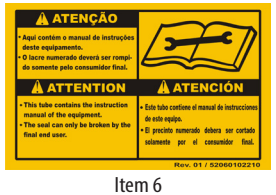

Item 6

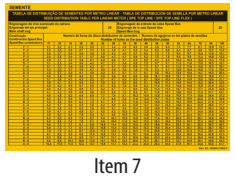

Item 7

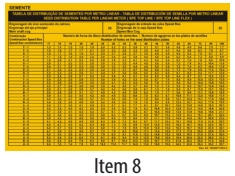

Item 8

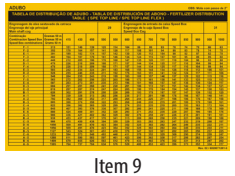

Item 9

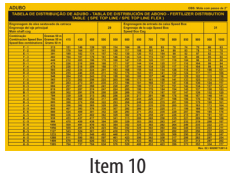

Item 10

Item 11

Item 12

Item 13

• Stickers - Deposit SPE 4500

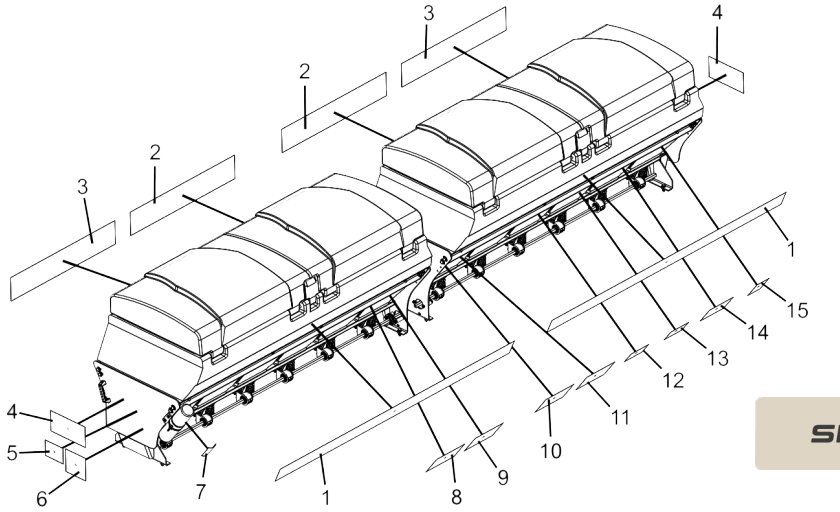

Item	Code	Product description	All
1	6020080372-0	Stickers Spe Topline 4500 Baldan (110 X 1950mm)	2
2	6020079900-6	Baldan Stickers 160mm X 870mm	2
3	6020080373-9	Stickers Spe Topline 4500 (160 X 870mm)	2
4	6020079513-2	Sticker Baldan 280x140mm	2
5	5206010309-7	Sticker Platform Warning (107 X 145mm)	1
6	5206010307-0	Sticker Of Gear And Chains Warning (145 X 150mm)	1
7	5206010221-0	Sticker Instruction Manual Warning (100 X 160mm)	1
8	6020071204-0	Sticker Seed Distribution Table 25/20 (Spe-Top Line/Spe-Top Line Flex)	1
9	6020071203-2	Sticker Seed Distribution Table 20/25 (Spe-Top Line/Spe-Top Line Flex)	1
10	6020071201-6	Sticker Fertilizer Distribution Table 20/31 (Spe-Top Line/Spe-Top Line Flex) (155	1
11	6020071202-4	Sticker Fertilizer Distribution Table 31/20 (Spe-Top Line/Spe-Top Line Flex) (155	1
12	5206010310-0	Sticker Disc Warning (150 X 95mm)	1
13	5206010308-9	Sticker Hydraulic Hoses Warning(150 X 95mm)	1
14	5206010304-6	Sticker Change Of Oil For Speed Box(135 X 200mm)	1
15	5206010278-3	Sticker For Cleaning The Fertilizer Hopper (105 X 130mm)	1

Item 1

Item 2

Item 3

Item 4

Item 5

Item 6

Item 7

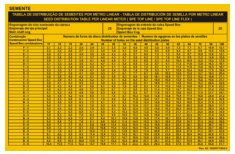

Item 8

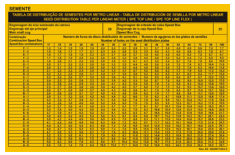

Item 9

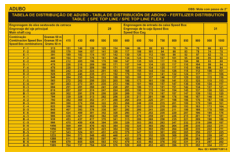

Item 10

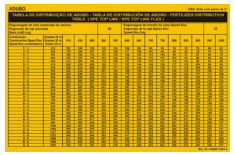

Item 11

Item 12

Item 13

Item 14

Item 15

• Stickers 3º deposit - Optional

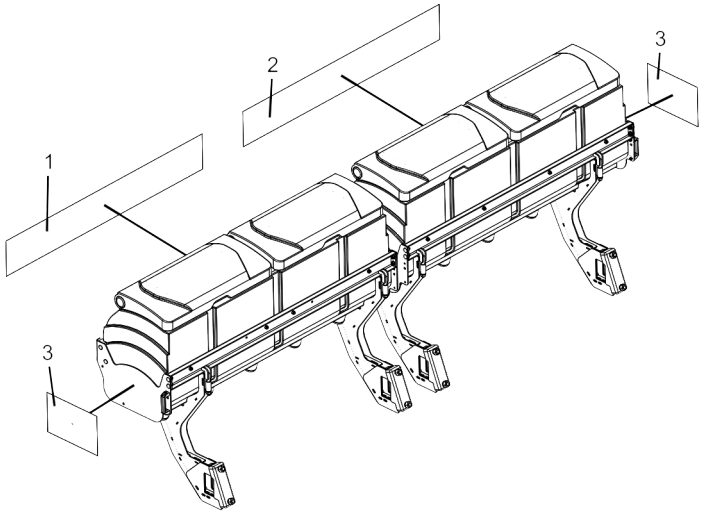

Item	Code	Product description	All	4000	4500
1	6020079933-2	Baldan Stickers (220 X 1500mm)		1	
1	6020079506-0	Baldan Stickers (220 X 1800mm)			1
2	6020080377-1	Spe Topline Air 4000 Stickers (220 X 1500mm)		1	
2	6020080371-2	Spe Topline Air 4500 Stickers (220 X 1800mm)			1
3	6020079507-8	Baldan Seed Deposit Decal 370 X 246	2		

Item 1

Item 2

Item 3

BALDAN

Avenida Baldan, 1500
Nova Matão
15.993-900
Matão/SP - Brasil
sac@baldan.com.br
export@baldan.com.br

+55 16 3221 6500
baldan.com.br