Parts Catalog

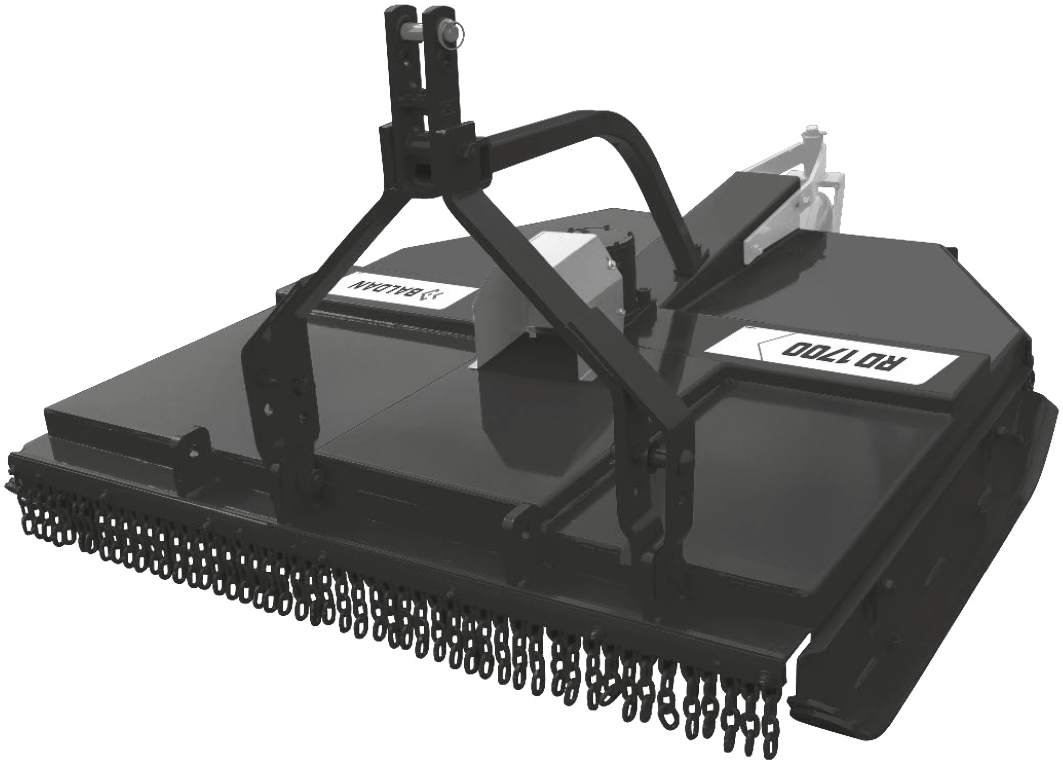

RD/RDU 1300/1500/1700

Central and Lateral Mounted Rotary Cutter

BALDAN

Index

RD 1300 W/Support 4
Table RD 1300 W/Support 5
RD 1300 W/Rotating Tray 6
Table RD 1300 W/Rotating Tray 7
RDU 1300 W/Support 8
Table RDU 1300 W/Support 9
RDU 1300 W/Rotating Tray 10
Table RDU 1300 W/Rotating Tray 11
RD 1500 W/Support 12
Table RD 1500 W/Support 13
RD 1500 W/Rotating Tray 14
Table RD 1500 W/Rotating Tray 15
RDU 1500 W/Support 16
Table RDU 1500 W/Support 17
RDU 1500 W/Rotating Tray 18
Table RDU 1500 W/Rotating Tray 19
RD 1700 W/Support 20
Table RD 1700 W/Support 21
RD 1700 W/Rotating Tray 22
Table RD 1700 W/Rotating Tray 23
RDU 1700 W/Support 24
Table RDU 1700 W/Support 25
RDU 1700 W/Rotating Tray 26
Table RDU 1700 W/Rotating Tray 27
Complete Height Adjustment Ski 28
Transmision Box (BPN) 29
Transmision Box (Comer) 30
Chain Protections 31
Complete Front Protection 31
Complete Right/Left Rear Protection 32
Complete Central Rear Protection 32
Limiter Height Hitch 33
Depth Wheel W/Bearing 34
Cardan - STU 35
Cardan - AEMCO 35
Old Stickers 36
New Stickers 37

BALDAN

• RD 1300 W/Support

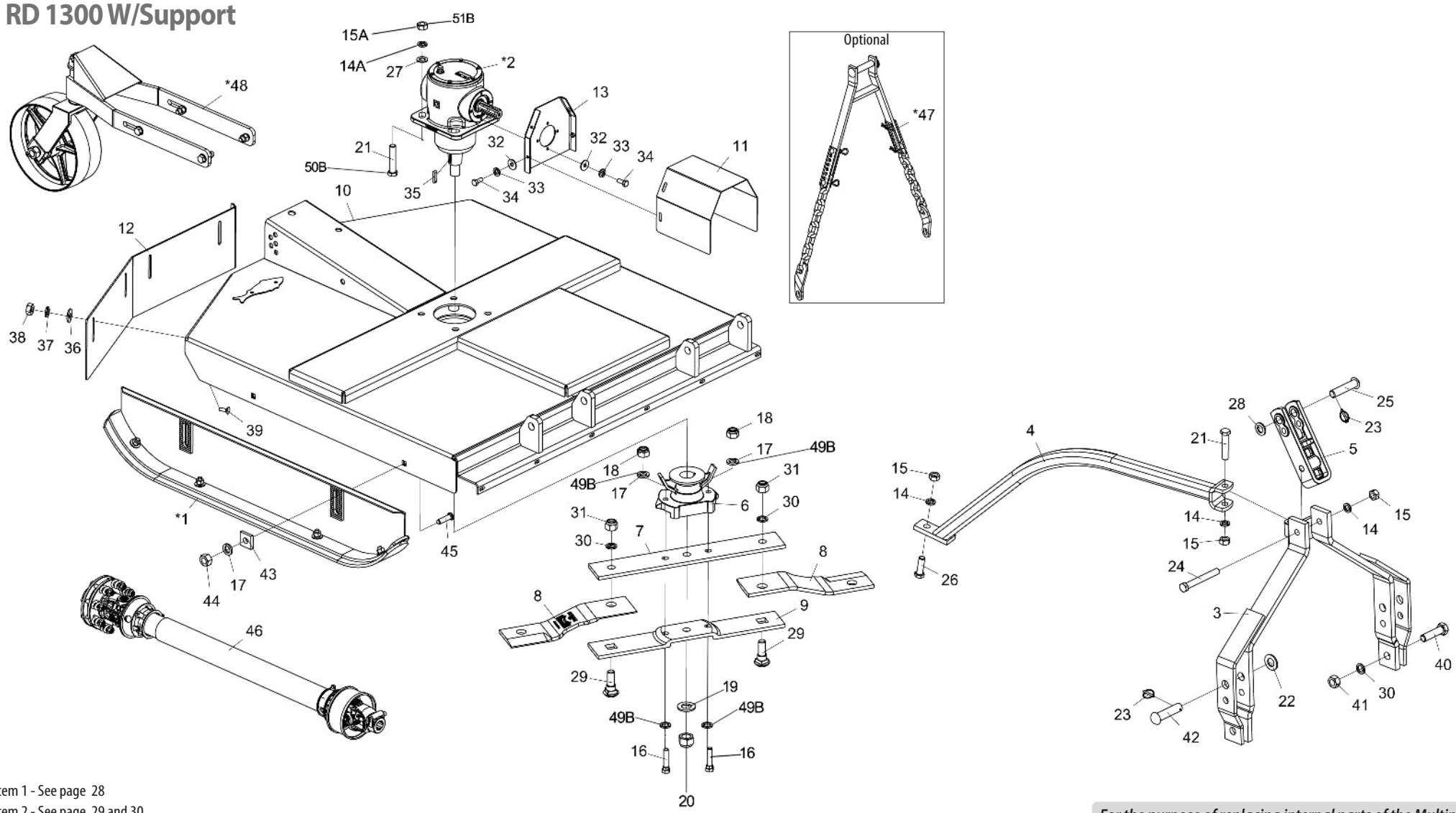

* Item 1 - See page 28
* Item 2 - See page 29 and 30
* Item 47 - See page 33
* Item 48 - See page 34

Note: Items 7A,9A,14A,15A,16A,17A,18A,21A, use until 10/2023, and items 7B,9B,14B,15B,16B,17B,18B,21B,49B,50B and51B use from 11/2023.

For the purpose of replacing internal parts of the Multiplier Transmission Box (2), check the manufacturer's name on the box.*

• Table RD 1300 W/Support

Item	Code	Product description	All
*1	5522010062-5	Complete Height Adjustment Ski	2
*2	6020057992-8	Transmision Box (BPN)	1
*2	6020059220-7	Transmission Box (COMER)	1
3	5084010146-8	Hitch Drawbar	1
4	5530012174-7	Support Of Drawbar	1
5	6010602571-4	Hitch Shackle 290Mm(Categoria 1 and 2)	1
6	5368010141-4	Fixation Bearing Of Blades With Scraper	1
7A	5040140011-4	Upper Blades Support Bar	1
7B	5040011074-0	Upper Blades Support Bar	1
8	4625264811-9	Blade 451 X 100 X 12Mm Double Edge	2
9A	5040140012-2	Lower Blades Support Bar	1
9B	5040011073-2	Lower Blades Support Bar	1
10	5092010604-5	Blades Protection Box	1
11	5136016309-5	Upper Plate Of Protection	1
12	5464010381-0	Rear Protection 1020Mm	1
13	5530016065-3	Protection Fixation Support	1
14A	6020010403-2	Pressure Washer M20 Media	7
14B	6020010403-2	Pressure Washer M20 Media	3
15A	6020311265-6	Hexagonal Nut M20 X 2,50 Ma Cl8 Ch.30Mm H.16,00Mm	7
15B	6020311265-6	Hexagonal Nut M20 X 2,50 Ma Cl8 Ch.30Mm H.16,00Mm	3
16A	6020310933-7	Hexagonal Head Bolt M16 x 2,00 x 75mm CL8.8 RP Special	2
16B	6020317861-4	Hexagonal Head Bolt M16 x 1,50 x 80mm CL8.8 RP	2
17A	6020010124-6	Pressure Washer M16 Media	6
17B	6020010124-6	Pressure Washer M16 Media	4
18A	6020317443-0	Self-Locking Nut With Nylon M16 X 2,00 Ma Cl8 Ch.24Mm H.16,00Mm	2
18B	6020317434-1	Hex Nut M16 X 1.50 MB CL8 CH.24mm HLT 13.00mm	2
19	6020010453-9	Smooth Washer M33 Ø34,00 X Ø60,00 X 5,00mm (Din 125A)	1
20	6020310810-1	Self-Locking Nut With Nylon 1.1/4" 12F Unf Gr5 Ch.1.7/8"	1
21A	6020317430-9	Hexagonal Head Bolt M20 X 2,50 X 100Mm Cl8.8 Rp	5
21B	6020317430-9	Hexagonal Head Bolt M20 X 2,50 X 100Mm Cl8.8 Rp	1
22	6020010450-4	Smooth Washer M33 Ø31,00 x Ø56,00 x 4,00mm (DIN 125A)	2
23	6020390293-2	Lock Ø5,75 X 40Mm	3
24	6020312506-5	Hexagonal Head Bolt M20 X 2,50 X 160Mm Cl8.8 Rp	1
25	6020310595-1	French Head Pin Ø1" X 105mm	1
26	6020310188-3	Hexagonal Head Bolt M20 X 2,50 X 65Mm Cl8.8 Rp	1

Item	Code	Product description	All
27	6020015986-4	Smooth Washer M20 (Ø21 x Ø37 x 3mm) Standart DIN 125	4
28	5024010039-5	Smooth Washer Ø26,2 X Ø44 X 4,75Mm	1
29	6020310934-5	French Head Bolt M24 x 3,00 x 80mm CL8.8 Special	2
30	6020010196-3	Pressure Washer M24 Media (	4
31	6020310338-0	Self-Locking Nut With Nylon M24 X 3,00 Ma Cl8 Ch.36Mm H.15,00Mm(White Galnanised)	2
32	6020010448-2	Smooth Washer M8 Ø8,40XØ24,00X2,00mm(DIN 9021)	8
33	6020010004-5	Pressure Washer M8 Media	8
34	6020311269-9	Hexagonal Head Bolt M8 X 1,25 X 20Mm Cl8.8 Rt	8
35	6020058892-7	Cotter Sq.3/8" x 44mm	1
36	6020010443-1	Smooth Washer M10 Ø10,50XØ30,00X2,50mm(DIN 9021)	4
37	6020010394-0	Pressure Washer M10 Media	4
38	6020310822-5	Hexagonal Nut M10 X 1,50 Ma Cl8 Ch.17Mm H.8,00Mm	4
39	6020317544-5	French Head Bolt M10 X 1,50 X 30Mm Cl8.8 Rt	4
40	6020310935-3	Hexagonal Head Bolt M24 X 3,00 X 90mm CL8.8 RP	2
41	6020310457-2	Hexagonal Nut M24 X 3,00 Ma Cl8 Ch.36Mm H.19,00Mm	2
42	6020310660-5	Pin Ø28 x 105mm	2
43	6010601016-4	Small Plate	4
44	6020310818-7	Hexagonal Nut M16 X 2,00 Ma Cl8 Ch.24Mm H.13,00Mm	4
45	6020310938-8	French Head Bolt M16 x 2,00 x 60mm CL8.8 RP	4
46	6020055613-8	Agricultural Cardan Shaft 1350 Mm (Closed)	1
*47	5252010120-9	Limiter Height Hitch	1
*48	5530018139-1	Depth Wheel W/Bearing	1
49B	6020016250-4	Wedge Lock Washer M16-DIN25201	4
50B	6020317613-1	Cab Screw. Hexagon M20 X 1.50 X 110mm CL8.8 RP	4
51B	6020310848-9	Low Nylon Self-Locking Hex Nut M20 X 1.50 MB CL8 CH.30mm H.22mm	4

BALDAN

• RD 1300 W/Rotating Tray

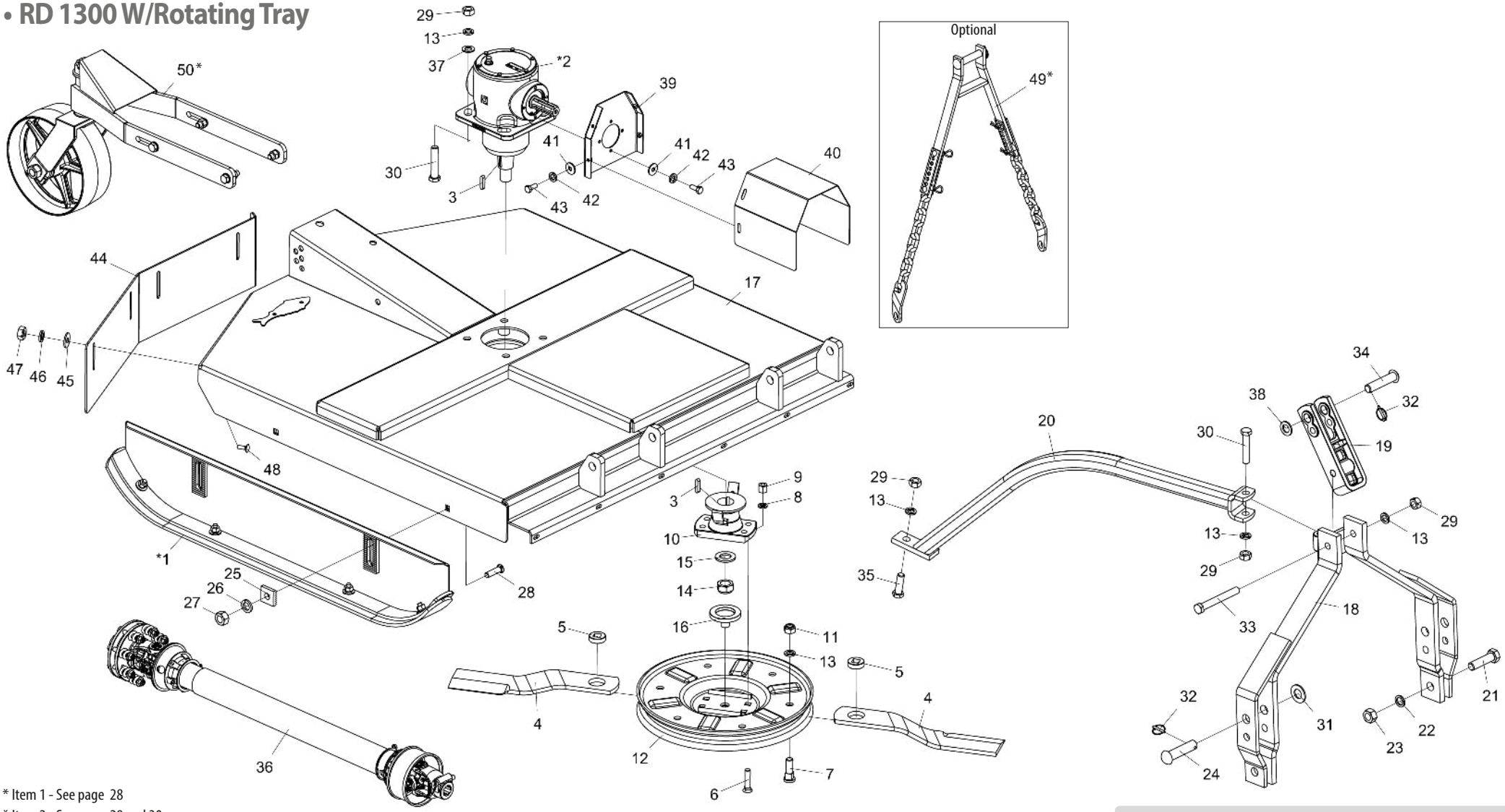

* Item 1 - See page 28
* Item 2 - See page 29 and 30
* Item 49 - See page 33
* Item 50 - See page 34

For the purpose of replacing internal parts of the Multiplier Transmission Box (2), check the manufacturer's name on the box.*

• Table RD 1300 W/Rotating Tray

Item	Code	Product description	All
*1	5522010062-5	Complete Height Adjustment Ski	2
*2	6020057992-8	Transmision Box (BPN)	1
*2	6020059220-7	Transmission Box (COMER)	1
3	6020058892-7	Cotter Sq.3/8" x 44mm	1
4	4625265212-4	Knife 505 x 3.1/2" x 1/2" (Single Cut)	2
5	5024070001-5	Smooth Washer Sq.20 X Ø49 X 15,00Mm	2
6	6020310227-8	Screw Type A3 5/8" X 2.3/4" 18F Unf1A Gr2 Rp	4
7	6020310946-9	Round Head Bolt M20 x 2,5 X 65mm CL8.8 RT	2
8	6020010412-1	Pressure Washer 5/8" Media Industry	4
9	6020310808-0	Double Hexagonal Nut 5/8" 18F Unf Gr5 Ch.15/16" H.21,50Mm	4
10	5368010891-5	Tray Fixation Bearing W/Scrapper	1
11	6020310837-3	Self-Locking Nut With Nylon M20 X 2,50 Ma Cl8 Ch.30Mm H.18,70Mm	2
12	5038010010-7	Rotating Tray	1
13	6020010403-2	Pressure Washer M20 Media	9
14	6020310810-1	Self-Locking Nut With Nylon 1.1/4" 12F Unf Gr5 Ch.1.7/8"	1
15	6020010453-9	Smooth Washer M33 Ø34,00 X Ø60,00 X 5,00mm (Din 125A)	1
16	6020110132-0	Guide Flange	1
17	5092010604-5	Blades Protection Box	1
18	5084010146-8	Hitch Drawbar	1
19	6010602571-4	Hitch Shackle 290Mm(Categoria 1 and 2)	1
20	5530012174-7	Support Of Drawbar	1
21	6020310935-3	Hexagonal Head Bolt M24 X 3,00 X 90mm CL8.8 RP	2
22	6020010196-3	Pressure Washer M24 Media (	2
23	6020310457-2	Hexagonal Nut M24 X 3,00 Ma Cl8 Ch.36Mm H.19,00Mm	2
24	6020310660-5	Pin Ø28 x 105mm	2
25	6010601016-4	Small Plate	4
26	6020010124-6	Pressure Washer M16 Media	4
27	6020310818-7	Hexagonal Nut M16 X 2,00 Ma Cl8 Ch.24Mm H.13,00Mm	4
28	6020310938-8	French Head Bolt M16 x 2,00 x 60mm CL8.8 RP	4
29	6020311265-6	Hexagonal Nut M20 X 2,50 Ma Cl8 Ch.30Mm H.16,00Mm	7
30	6020317430-9	Hexagonal Head Bolt M20 X 2,50 X 100Mm Cl8.8 Rp	5
31	6020010450-4	Smooth Washer M33 Ø31,00 x Ø56,00 x 4,00mm (DIN 125A)	2
32	6020390293-2	Lock Ø5,75 X 40Mm	3
33	6020312506-5	Hexagonal Head Bolt M20 X 2,50 X 160Mm Cl8.8 Rp	1
34	6020310595-1	French Head Pin Ø1" X 105mm	1
35	6020310992-2	Hexagonal Head Bolt M20 X 2,50 X 55Mm Cl8.8 Rp	1

Item	Code	Product description	All
36	6020055613-8	Agricultural Cardan Shaft 1350 Mm (Closed)	1
37	6020015986-4	Smooth Washer M20 (Ø21 x Ø37 x 3mm) Standart DIN 125	4
38	6020010441-5	Smooth Washer M24 x Ø26xØ44x4mm	1
39	5530016065-3	Protection Fixation Support	1
40	5136016309-5	Upper Plate Of Protection	1
41	6020010448-2	Smooth Washer M8 Ø8,40XØ24,00X2,00mm(DIN 9021)	8
42	6020010004-5	Pressure Washer M8 Media	8
43	6020311269-9	Hexagonal Head Bolt M8 X 1,25 X 20Mm Cl8.8 Rt	8
44	5464010381-0	Rear Protection 1020Mm	1
45	6020010443-1	Smooth Washer M10 Ø10,50XØ30,00X2,50mm(DIN 9021)	4
46	6020010394-0	Pressure Washer M10 Media	4
47	6020310822-5	Hexagonal Nut M10 X 1,50 Ma Cl8 Ch.17Mm H.8,00Mm	4
48	6020317544-5	French Head Bolt M10 X 1,50 X 30Mm Cl8.8 Rt	4
*49	5252010120-9	Limiter Height Hitch	1
*50	5530018139-1	Depth Wheel W/Bearing	1

• RDU 1300 W/Support

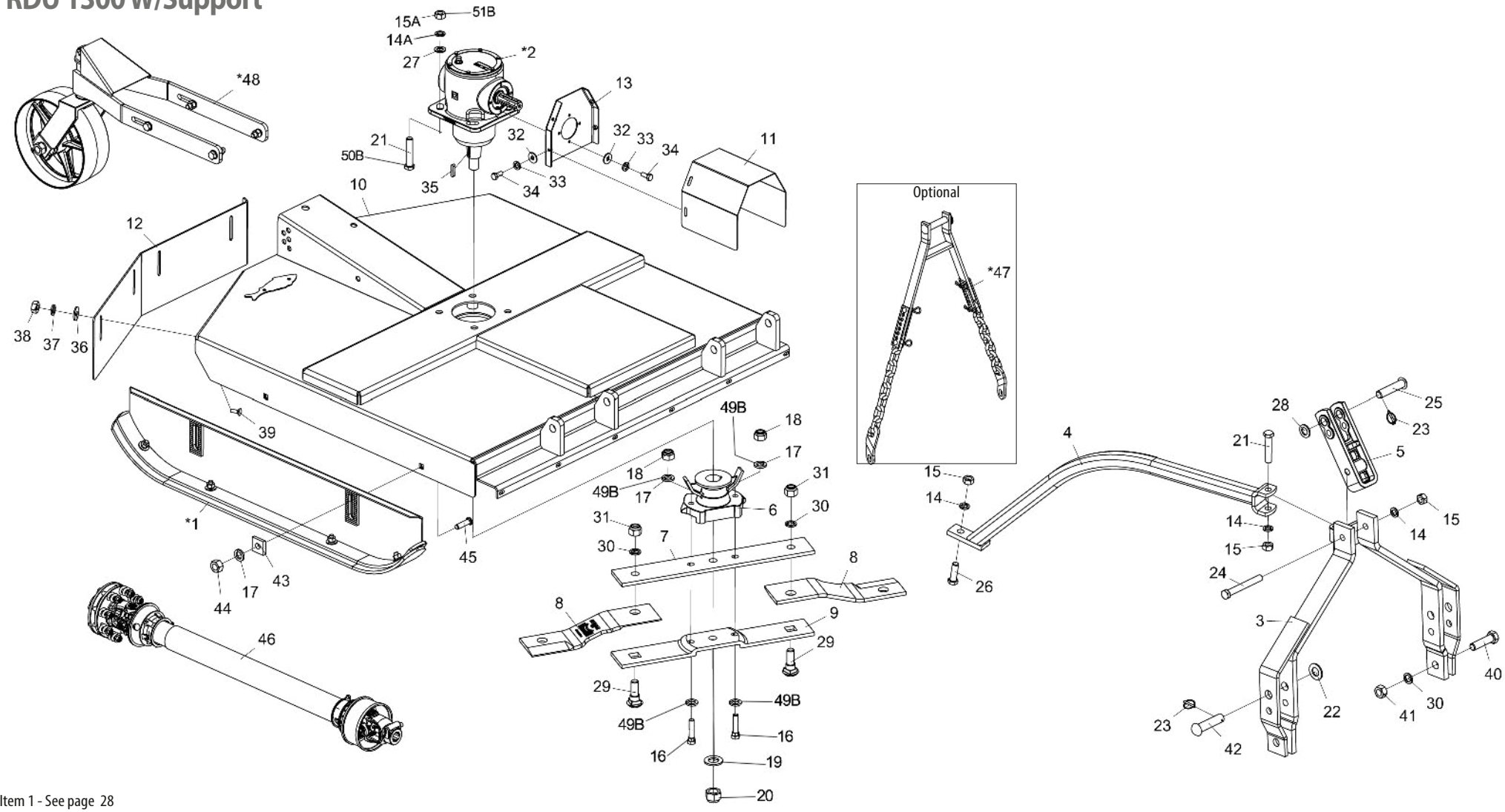

* Item 1 - See page 28
* Item 2 - See page 29 and 30
* Item 47 - See page 33
* Item 48 - See page 34

Note: Items 7A,9A,14A,15A,16A,17A,18A,21A, use until 10/2023, and items 7B,9B,14B,15B,16B,17B,18B,21B,49B,50B and51B use from 11/2023.

For the purpose of replacing internal parts of the Multiplier Transmission Box (2), check the manufacturer's name on the box.*

• Table RDU 1300 W/Support

Item	Code	Product description	All
*1	5522010062-5	Complete Height Adjustment Ski	2
*2	6020057992-8	Transmision Box (BPN)	1
*2	6020059220-7	Transmission Box (COMER)	1
3	5084010146-8	Hitch Drawbar	1
4	5530012174-7	Support Of Drawbar	1
5	6010602571-4	Hitch Shackle 290mm(Categoria 1 and 2)	1
6	5368010141-4	Fixation Bearing Of Blades With Scraper	1
7A	5040140011-4	Upper Blades Support Bar	1
7B	5040011074-0	Upper Knife Holder Bar	1
8	4625264811-9	Blade 451 X 100 X 12mm Double Edge	2
9A	5040140012-2	Lower Blades Support Bar	1
9B	5040011073-2	Lower Knife Holder Bar	1
10	5092010604-5	Blades Protection Box	1
11	5136016309-5	Upper Plate Of Protection	1
12	5464010381-0	Rear Protection 1020mm	1
13	5530016065-3	Protection Fixation Support	1
14A	6020010403-2	Pressure Washer M20 Media	7
14B	6020010403-2	Pressure Washer M20 Media	3
15A	6020311265-6	Hexagonal Nut M20 X 2,50 Ma Cl8 Ch.30mm H.16,00mm	7
15B	6020311265-6	Hexagonal Nut M20 X 2,50 Ma Cl8 Ch.30mm H.16,00mm	3
16A	6020310933-7	Hexagonal Head Bolt M16 x 2,00 x 75mm CL8.8 RP Special	2
16B	6020317861-4	Head Screw. Hexagon M16 X 1.50 X 80mm CL8.8 RP	2
17A	6020010124-6	Pressure Washer M16 Media	6
17B	6020010124-6	Pressure Washer M16 Media	4
18A	6020317443-0	Self-Locking Nut With Nylon M16 X 2,00 Ma Cl8 Ch.24mm H.16,00mm	2
18B	6020317434-1	Hexagonal Nut M16 X 1,50 Mb Cl8 Ch.24mm H.13,00mm	2
19	6020010453-9	Smooth Washer M33 Ø34,00 X Ø60,00 X 5,00mm (Din 125A)	1
20	6020310810-1	Self-Locking Nut With Nylon 1.1/4" 12F Unf Gr5 Ch.1.7/8"	1
21A	6020317430-9	Hexagonal Head Bolt M20 X 2,50 X 100mm Cl8.8 Rp	5
21B	6020317430-9	Hexagonal Head Bolt M20 X 2,50 X 100mm Cl8.8 Rp	1
22	6020010450-4	Smooth Washer M33 Ø31,00 x Ø56,00 x 4,00mm (DIN 125A)	2
23	6020390293-2	Lock Ø5,75 X 40mm	3
24	6020312506-5	Hexagonal Head Bolt M20 X 2,50 X 160mm Cl8.8 Rp	1
25	6020310595-1	French Head Pin Ø1"X 105mm	1
26	6020310188-3	Hexagonal Head Bolt M20 X 2,50 X 65mm Cl8.8 Rp	1
27	6020015986-4	Smooth Washer M20 (Ø21 x Ø37 x 3mm) Standart DIN 125	4

Item	Code	Product description	All
28	5024010039-5	Smooth Washer Ø26,2 X Ø44 X 4,75mm	1
29	6020310934-5	French Head Bolt M24 x 3,00 x 80mm CL8.8 Special	2
30	6020010196-3	Pressure Washer M24 Media (	4
31	6020310338-0	Self-Locking Nut With Nylon M24 X 3,00 Ma Cl8 Ch.36mm H.15,00mm(White Galnanised)	2
32	6020010448-2	Smooth Washer M8 Ø8,40XØ24,00X2,00mm(DIN 9021)	8
33	6020010004-5	Pressure Washer M8 Media	8
34	6020311269-9	Hexagonal Head Bolt M8 X 1,25 X 20mm Cl8.8 Rt	8
35	6020058892-7	Cotter Sq.3/8"x 44mm	1
36	6020010443-1	Smooth Washer M10 Ø10,50XØ30,00X2,50mm(DIN 9021)	4
37	6020010394-0	Pressure Washer M10 Media	4
38	6020310822-5	Hexagonal Nut M10 X 1,50 Ma Cl8 Ch.17mm H.8,00mm	4
39	6020317544-5	French Head Bolt M10 X 1,50 X 30mm Cl8.8 Rt	4
40	6020310935-3	Hexagonal Head Bolt M24 X 3,00 X 90mm CL8.8 RP	2
41	6020310457-2	Hexagonal Nut M24 X 3,00 Ma Cl8 Ch.36mm H.19,00mm	2
42	6020310660-5	Pin Ø28 x 105mm	2
43	6010601016-4	Small Plate	4
44	6020310818-7	Hexagonal Nut M16 X 2,00 Ma Cl8 Ch.24mm H.13,00mm	4
45	6020310938-8	French Head Bolt M16 x 2,00 x 60mm CL8.8 RP	4
46	6020055613-8	Agricultural Cardan Shaft 1350 mm (Closed)	1
*47	5252010120-9	Limiter Height Hitch	1
*48	5530018139-1	Support Mounted Height Control	1
49B	6020016250-4	Wedge Lock Washer M16 - Din25201	4
50B	6020317613-1	Hexagonal Head Bolt M20 X 1,50 X 110mm Cl8.8 Rp	4
51B	6020310848-9	Nut hexagonal Self-locking C/Nylon Low M20 X 1,50 Mb Cl8 Ch30mm Alt22mm	4

BALDAN

• RDU 1300 W/Rotating Tray

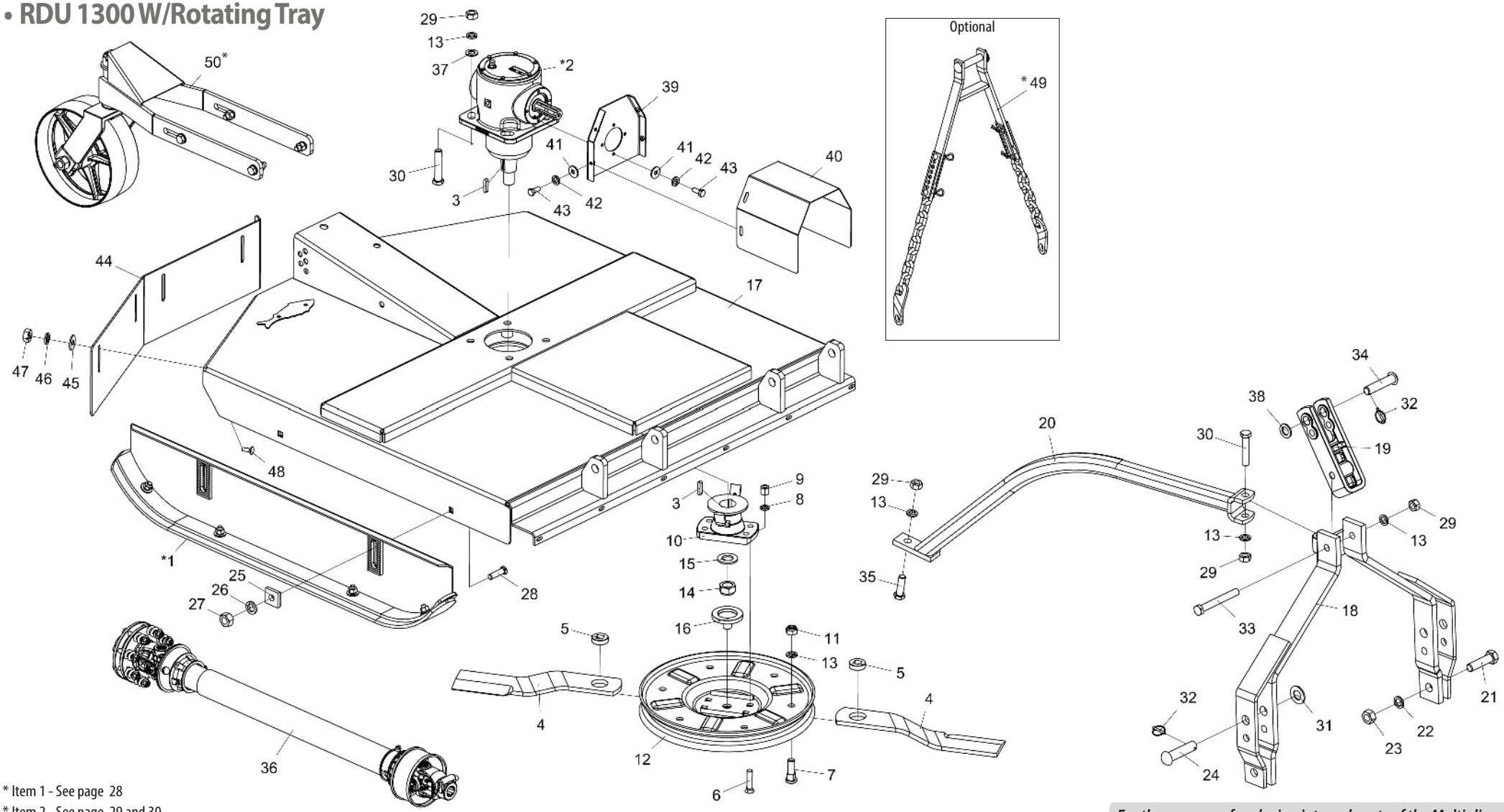

* Item 1 - See page 28
* Item 2 - See page 29 and 30
* Item 49 - See page 33
* Item 50 - See page 34

For the purpose of replacing internal parts of the Multiplier Transmission Box (2), check the manufacturer's name on the box.*

• Table RDU 1300 W/Rotating Tray

Item	Code	Product description	All
*1	5522010062-5	Complete Height Adjustment Ski	2
*2	6020057992-8	Transmision Box (BPN)	1
*2	6020059220-7	Transmission Box (COMER)	1
3	6020058892-7	Cotter Sq.3/8" x 44mm	1
4	4625265212-4	Knife 505 x 3.1/2" x 1/2" (Single Cut)	2
5	5024070001-5	Smooth Washer Sq.20 X Ø49 X 15,00Mm	2
6	6020310227-8	Screw Type A3 5/8" X 2.3/4" 18F Unf1A Gr2 Rp	4
7	6020310946-9	Round Head Bolt M20 x 2,5 X 65mm CL8.8 RT	2
8	6020010412-1	Pressure Washer 5/8" Media Industry	4
9	6020310808-0	Double Hexagonal Nut 5/8" 18F Unf Gr5 Ch.15/16" H.21,50Mm	4
10	5368010891-5	Tray Fixation Bearing W/Scrapper	1
11	6020310837-3	Self-Locking Nut With Nylon M20 X 2,50 Ma Cl8 Ch.30Mm H.18,70Mm	2
12	5038010010-7	Rotating Tray	1
13	6020010403-2	Pressure Washer M20 Media	9
14	6020310810-1	Self-Locking Nut With Nylon 1.1/4" 12F Unf Gr5 Ch.1.7/8"	1
15	6020010453-9	Smooth Washer M33 Ø34,00 X Ø60,00 X 5,00mm (Din 125A)	1
16	6020110132-0	Guide Flange	1
17	5092010604-5	Blades Protection Box	1
18	5084010146-8	Hitch Drawbar	1
19	6010602571-4	Hitch Shackle 290Mm(Categoria 1 and 2)	1
20	5530012174-7	Support Of Drawbar	1
21	6020310935-3	Hexagonal Head Bolt M24 X 3,00 X 90mm CL8.8 RP	2
22	6020010196-3	Pressure Washer M24 Media (	2
23	6020310457-2	Hexagonal Nut M24 X 3,00 Ma Cl8 Ch.36Mm H.19,00Mm	2
24	6020310660-5	Pin Ø28 x 105mm	2
25	6010601016-4	Small Plate	4
26	6020010124-6	Pressure Washer M16 Media	4
27	6020310818-7	Hexagonal Nut M16 X 2,00 Ma Cl8 Ch.24Mm H.13,00Mm	4
28	6020310938-8	French Head Bolt M16 x 2,00 x 60mm CL8.8 RP	4
29	6020311265-6	Hexagonal Nut M20 X 2,50 Ma Cl8 Ch.30Mm H.16,00Mm	7
30	6020317430-9	Hexagonal Head Bolt M20 X 2,50 X 100Mm Cl8.8 Rp	5
31	6020010450-4	Smooth Washer M33 Ø31,00 x Ø56,00 x 4,00mm (DIN 125A)	2
32	6020390293-2	Lock Ø5,75 X 40Mm	3
33	6020312506-5	Hexagonal Head Bolt M20 X 2,50 X 160Mm Cl8.8 Rp	1
34	6020310595-1	French Head Pin Ø1" X 105mm	1
35	6020310992-2	Hexagonal Head Bolt M20 X 2,50 X 55Mm Cl8.8 Rp	1
36	6020055613-8	Agricultural Cardan Shaft 1350 Mm (Closed)	1
37	6020015986-4	Smooth Washer M20 (Ø21 x Ø37 x 3mm) Standart DIN 125	4
38	6020010441-5	Smooth Washer M24 x Ø26xØ44x4mm	1
39	5530016065-3	Protection Fixation Support	1
40	5136016309-5	Upper Plate Of Protection	1
41	6020010448-2	Smooth Washer M8 Ø8,40XØ24,00X2,00mm(DIN 9021)	8
42	6020010004-5	Pressure Washer M8 Media	8
43	6020311269-9	Hexagonal Head Bolt M8 X 1,25 X 20Mm Cl8.8 Rt	8
44	5464010381-0	Rear Protection 1020Mm	1
45	6020010443-1	Smooth Washer M10 Ø10,50XØ30,00X2,50mm(DIN 9021)	4
46	6020010394-0	Pressure Washer M10 Media	4
47	6020310822-5	Hexagonal Nut M10 X 1,50 Ma Cl8 Ch.17Mm H.8,00Mm	4
48	6020317544-5	French Head Bolt M10 X 1,50 X 30Mm Cl8.8 Rt	4
*49	5252010120-9	Limiter Height Hitch	1
*50	5530018139-1	Depth Wheel W/Bearing	1

BALDAN

• RD 1500 W/Support

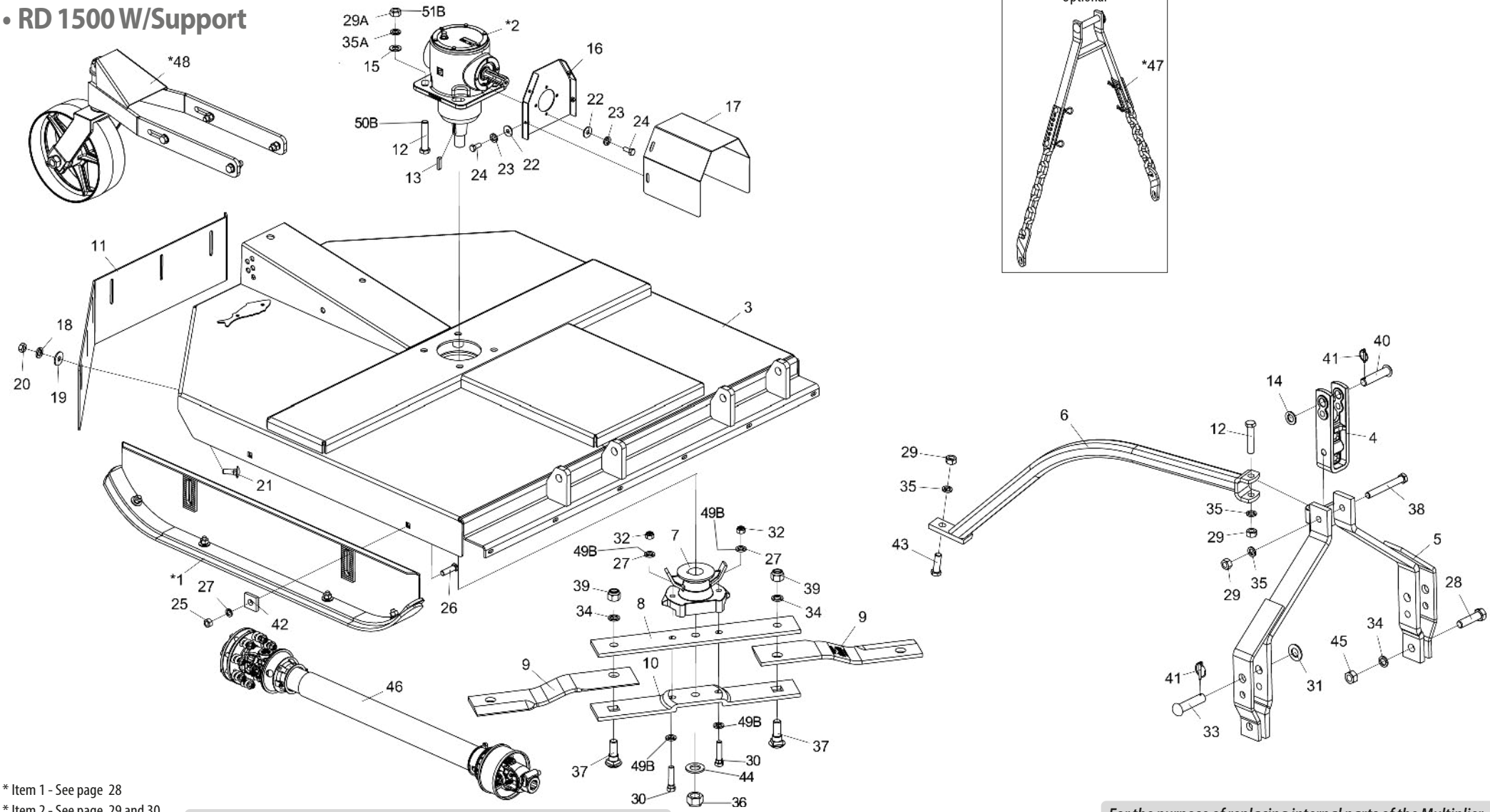

* Item 1 - See page 28
* Item 2 - See page 29 and 30
* Item 47 - See page 33
* Item 48 - See page 34

Note: Items 8A,10A,12A,27A,29A,30A,32A and 35A, use until 10/2023, and items 8B,10B,12B,27B,29B,30B,32B,35B,49B,50B AND 51B use from 11/2023.

For the purpose of replacing internal parts of the Multiplier Transmission Box (2), check the manufacturer's name on the box.*

• Table RD 1500 W/Support

Item	Code	Product description	All
*1	5522010062-5	Complete Height Adjustment Ski	2
*2	6020057992-8	Transmision Box (BPN)	1
*2	6020059220-7	Transmission Box (COMER)	1
3	5092010600-2	Knife Protection Box (RD - RDU 1500)	1
4	6010602571-4	Hitch Shackle 290Mm(Categoria 1 and 2)	1
5	5084010146-8	Hitch Drawbar	1
6	5530012174-7	Support Of Drawbar	1
7	5368010141-4	Fixation Bearing Of Blades With Scraper	1
8A	5040140011-4	Upper Blades Support Bar	1
8B	5040011074-0	Upper Blades Support Bar	1
9	4625265611-1	Knife 540 x 100 x 12mm Double Cut Extra Strong Steel	2
10A	5040140012-2	Lower Blades Support Bar	1
10B	5040011073-2	Lower Blades Support Bar	1
11	5464010382-8	1250 mm Rear Protection	1
12A	6020317430-9	Hexagonal Head Bolt M20 X 2,50 X 100Mm Cl8.8 Rp	5
12B	6020317430-9	Hexagonal Head Bolt M20 X 2,50 X 100Mm Cl8.8 Rp	1
13	6020058892-7	Cotter Sq.3/8" x 44mm	1
14	5024010039-5	Smooth Washer Ø26,2 X Ø44 X 4,75Mm	1
15	6020015986-4	Smooth Washer M20 (Ø21 x Ø37 x 3mm) Standart DIN 125	4
16	5530016065-3	Protection Fixation Support	1
17	5136016309-5	Upper Plate Of Protection	1
18	6020010394-0	Pressure Washer M10 Media	6
19	6020010443-1	Smooth Washer M10 Ø10,50XØ30,00X2,50mm(DIN 9021)	6
20	6020310822-5	Hexagonal Nut M10 X 1,50 Ma Cl8 Ch.17Mm H.8,00Mm	6
21	6020317544-5	French Head Bolt M10 X 1,50 X 30Mm Cl8.8 Rt	6
22	6020010448-2	Smooth Washer M8 Ø8,40XØ24,00X2,00mm(DIN 9021)	8
23	6020010004-5	Pressure Washer M8 Media	8
24	6020311269-9	Hexagonal Head Bolt M8 X 1,25 X 20Mm Cl8.8 Rt	8
25	6020310818-7	Hexagonal Nut M16 X 2,00 Ma Cl8 Ch.24Mm H.13,00Mm	4
26	6020310938-8	French Head Bolt M16 x 2,00 x 60mm CL8.8 RP	4
27A	6020010124-6	Pressure Washer M16 Media	6
27B	6020010124-6	Pressure Washer M16 Media	4
28	6020310935-3	Hexagonal Head Bolt M24 X 3,00 X 90mm CL8.8 RP	2
29A	6020311265-6	Hexagonal Nut M20 X 2,50 Ma Cl8 Ch.30Mm H.16,00Mm	7
29B	6020311265-6	Hexagonal Nut M20 X 2,50 Ma Cl8 Ch.30Mm H.16,00Mm	3
30A	6020310933-7	Hexagonal Head Bolt M16 x 2,00 x 75mm CL8.8 RP Special	2

Item	Code	Product description	All
30B	6020317861-4	Cab Screw. Hexagon M16 X 1.50 X 80mm CL8.8 RP	2
31	6020010450-4	Smooth Washer M33 Ø31,00 x Ø56,00 x 4,00mm (DIN 125A)	2
32A	6020317443-0	Self-Locking Nut With Nylon M16 X 2,00 Ma Cl8 Ch.24Mm H.16,00Mm	2
32B	6020317434-1	Hex Nut M16 X 1.50 MB CL8 CH.24mm HLT.13mm	2
33	6020310660-5	Pin Ø28 x 105mm	2
34	6020010196-3	Pressure Washer M24 Media	4
35A	6020010403-2	Pressure Washer M20 Media	7
35B	6020010403-2	Pressure Washer M20 Media	3
36	6020310810-1	Self-Locking Nut With Nylon 1.1/4" 12F Unf Gr5 Ch.1.7/8"	1
37	6020310934-5	French Head Bolt M24 x 3,00 x 80mm CL8.8 Special	2
38	6020312506-5	Hexagonal Head Bolt M20 X 2,50 X 160Mm Cl8.8 Rp	1
39	6020310338-0	Self-Locking Nut With Nylon M24 X 3,00 Ma Cl8 Ch.36Mm H.15,00Mm(White Galnanised)	2
40	6020310595-1	French Head Pin Ø1" X 105mm	1
41	6020390293-2	Lock Ø5,75 X 40Mm	3
42	6010601016-4	Small Plate	4
43	6020310188-3	Hexagonal Head Bolt M20 X 2,50 X 65Mm Cl8.8 Rp	1
44	6020010453-9	Smooth Washer M33 Ø34,00 X Ø60,00 X 5,00mm (Din 125A)	1
45	6020310457-2	Hexagonal Nut M24 X 3,00 Ma Cl8 Ch.36Mm H.19,00Mm	2
46	6020055613-8	Agricultural Cardan Shaft 1350 Mm (Closed)	1
*47	5252010120-9	Limiter Height Hitch	1
*48	5530018139-1	Depth Wheel W/Bearing	1
49B	6020016250-4	Wedge Lock Washer M16-DIN25201	4
50B	6020317613-1	Cab Screw. Hexagon M20 X 1.50 X 110mm CL8.8 RP	4
51B	6020310848-9	Self-locking Hex Nut with low nylon M20 X 1.50 MB CL8 CH.30mm HLT.22mm	4

BALDAN

• RD 1500 W/Rotating Tray

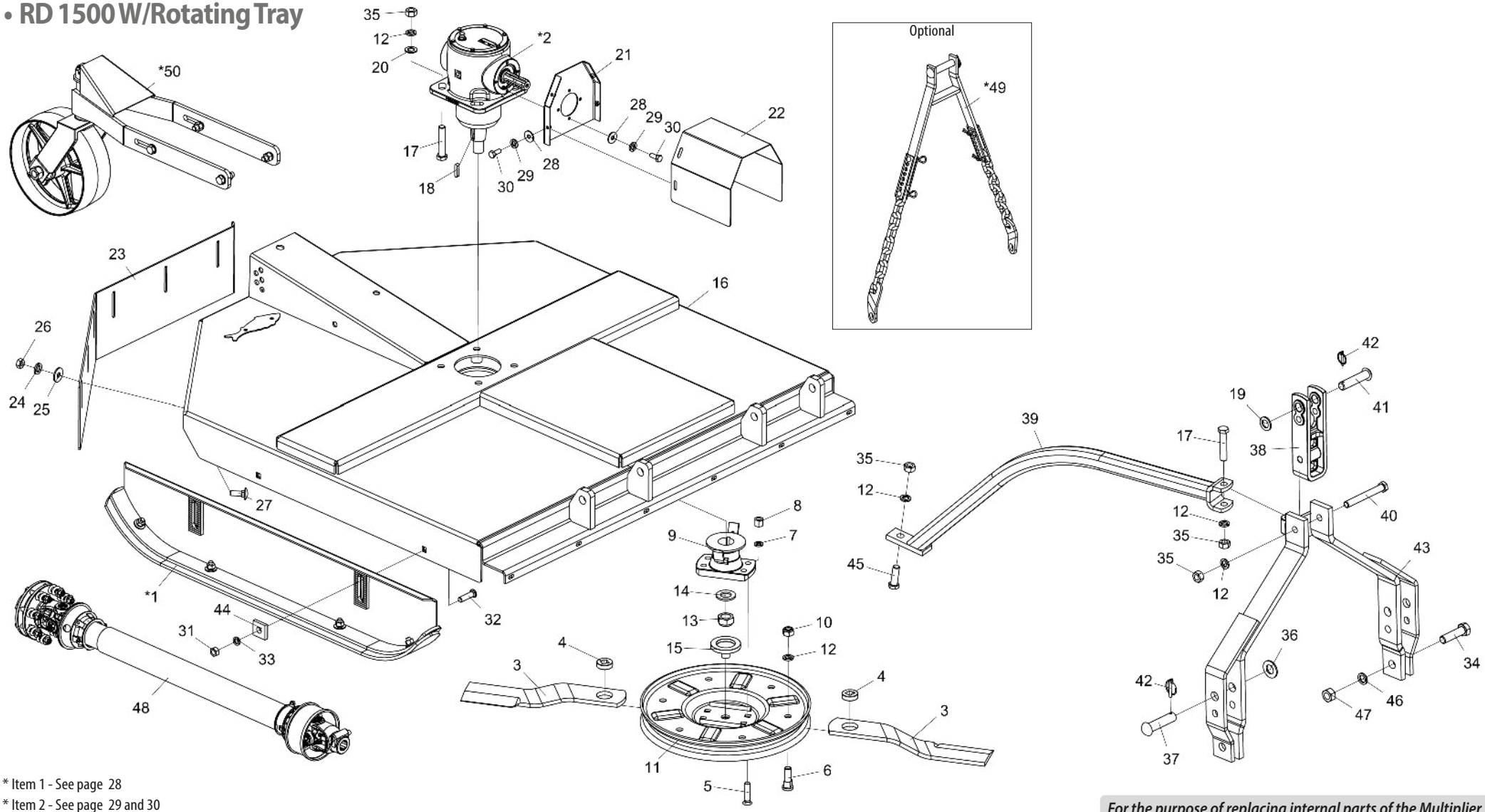

* Item 1 - See page 28
* Item 2 - See page 29 and 30
* Item 49 - See page 33
* Item 50 - See page 34

For the purpose of replacing internal parts of the Multiplier Transmission Box (2), check the manufacturer's name on the box.*

• Table RD 1500 W/Rotating Tray

Item	Code	Product description	All
*1	5522010062-5	Complete Height Adjustment Ski	2
*2	6020057992-8	Transmision Box (BPN)	1
*2	6020059220-7	Transmission Box (COMER)	1
3	4625266010-0	Blade 605 X 3.1/2" X 1/2" Single Edge	2
4	5024070001-5	Smooth Washer Sq.20 X Ø49 X 15,00Mm	2
5	6020310227-8	Screw Type A3 5/8" X 2.3/4" 18F Unf1A Gr2 Rp	4
6	6020310946-9	Round Head Bolt M20 x 2,5 X 65mm CL8.8 RT	2
7	6020010412-1	Pressure Washer 5/8" Media Industry	4
8	6020310808-0	Double Hexagonal Nut 5/8" 18F Unf Gr5 Ch.15/16" H.21,50Mm	4
9	5368010891-5	Tray Fixation Bearing W/Scrapper	1
10	6020310837-3	Self-Locking Nut With Nylon M20 X 2,50 Ma Cl8 Ch.30Mm H.18,70Mm	2
11	5038010010-7	Rotating Tray	1
12	6020010403-2	Pressure Washer M20 Media	9
13	6020310810-1	Self-Locking Nut With Nylon 1.1/4" 12F Unf Gr5 Ch.1.7/8"	1
14	6020010453-9	Smooth Washer M33 Ø34,00 X Ø60,00 X 5,00mm (Din 125A)	1
15	6020110132-0	Guide Flange	1
16	5092010600-2	Blades Protection Box	1
17	6020317430-9	Hexagonal Head Bolt M20 X 2,50 X 100Mm Cl8.8 Rp	5
18	6020058892-7	Cotter Sq.3/8" x 44mm	1
19	6020010441-5	Smooth Washer M24 x Ø26xØ44x4mm	1
20	6020015986-4	Smooth Washer M20 (Ø21 x Ø37 x 3mm) Standart DIN 125	4
21	5530016065-3	Protection Fixation Support	1
22	5136016309-5	Upper Plate Of Protection	1
23	5464010382-8	Rear Protection 1250 mm	1
24	6020010394-0	Pressure Washer M10 Media	6
25	6020010443-1	Smooth Washer M10 Ø10,50XØ30,00X2,50mm(DIN 9021)	6
26	6020310822-5	Hexagonal Nut M10 X 1,50 Ma Cl8 Ch.17Mm H.8,00Mm	6
27	6020317544-5	French Head Bolt M10 X 1,50 X 30Mm Cl8.8 Rt	6
28	6020010448-2	Smooth Washer M8 Ø8,40XØ24,00X2,00mm(DIN 9021)	8
29	6020010004-5	Pressure Washer M8 Media	8
30	6020311269-9	Hexagonal Head Bolt M8 X 1,25 X 20Mm Cl8.8 Rt	8
31	6020310818-7	Hexagonal Nut M16 X 2,00 Ma Cl8 Ch.24Mm H.13,00Mm	4
32	6020310938-8	French Head Bolt M16 x 2,00 x 60mm CL8.8 RP	4
33	6020010124-6	Pressure Washer M16 Media	4
34	6020310935-3	Hexagonal Head Bolt M24 X 3,00 X 90mm CL8.8 RP	2

Item	Code	Product description	All
35	6020311265-6	Hexagonal Nut M20 X 2,50 Ma Cl8 Ch.30Mm H.16,00Mm	7
36	6020010450-4	Smooth Washer M33 Ø31,00 x Ø56,00 x 4,00mm (DIN 125A)	2
37	6020310660-5	Pin Ø28 x 105mm	2
38	6010602571-4	Hitch Shackle 290Mm(Categoria 1 and 2)	1
39	5530012174-7	Support Of Drawbar	1
40	6020312506-5	Hexagonal Head Bolt M20 X 2,50 X 160Mm Cl8.8 Rp	1
41	6020310595-1	French Head Pin Ø1" X 105mm	1
42	6020390293-2	Lock Ø5,75 X 40Mm	3
43	5084010146-8	Hitch Drawbar	1
44	6010601016-4	Small Plate	4
45	6020310992-2	Hexagonal Head Bolt M20 X 2,50 X 55Mm Cl8.8 Rp	1
46	6020010196-3	Pressure Washer M24 Media (	2
47	6020310457-2	Hexagonal Nut M24 X 3,00 Ma Cl8 Ch.36Mm H.19,00Mm	2
48	6020055613-8	Agricultural Cardan Shaft 1350 Mm (Closed)	1
*49	5252010120-9	Limiter Height Hitch	1
*50	5530018139-1	Depth Wheel W/Bearing	1

BALDAN

• RDU 1500 W/Support

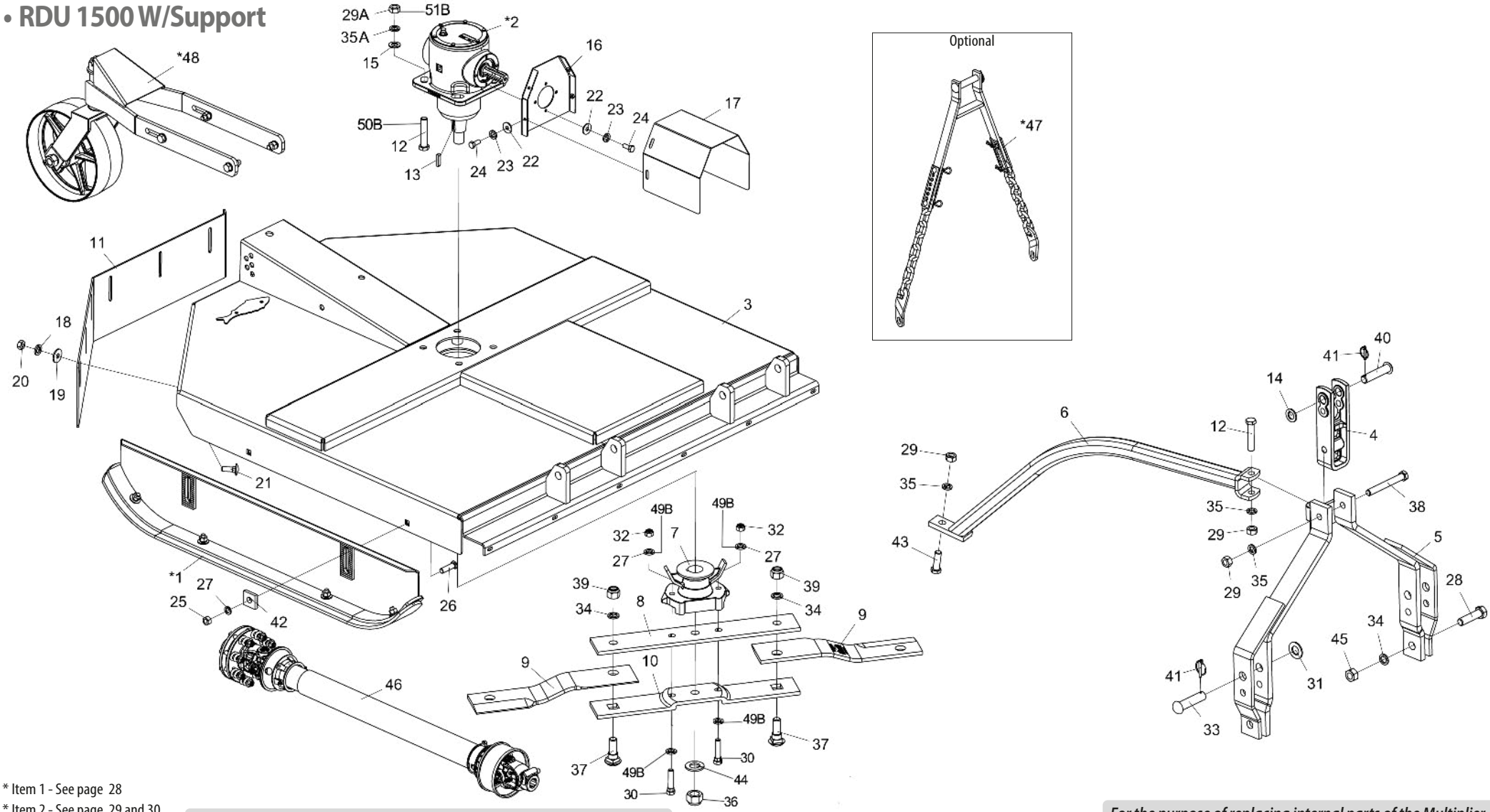

* Item 1 - See page 28
* Item 2 - See page 29 and 30
* Item 47 - See page 33
* Item 48 - See page 34

Note: Items 8A,10A,12A,27A,29A,30A,32A and 35A, use until 10/2023, and items 8B,10B,12B,27B,29B,30B,32B,35B,49B,50B AND 51B use from 11/2023.

For the purpose of replacing internal parts of the Multiplier Transmission Box (2), check the manufacturer's name on the box.*

• Table RDU 1500 W/Support

Item	Code	Product description	All
*1	5522010062-5	Complete Height Adjustment Ski	2
*2	6020057992-8	Transmision Box (BPN)	1
*2	6020059220-7	Transmission Box (COMER)	1
3	5092010600-2	Blades Protection Box	1
4	6010602571-4	Hitch Shackle 290Mm(Categoria 1 and 2)	1
5	5084010146-8	Hitch Drawbar	1
6	5530012174-7	Support Of Drawbar	1
7	5368010141-4	Fixation Bearing Of Blades With Scraper	1
8A	5040140011-4	Upper Blades Support Bar	1
8B	5040011074-0	Upper Blades Support Bar	1
9	4625265611-1	Knife 540 x 100 x 12mm Double Cut Extra Strong Steel	2
10A	5040140012-2	Lower Blades Support Bar	1
10B	5040011073-2	Lower Blades Support Bar	1
11	5464010382-8	Rear Protection 1250 mm	1
12A	6020317430-9	Hexagonal Head Bolt M20 X 2,50 X 100Mm Cl8.8 Rp	5
12B	6020317430-9	Hexagonal Head Bolt M20 X 2,50 X 100Mm Cl8.8 Rp	1
13	6020058892-7	Cotter Sq.3/8" x 44mm	1
14	5024010039-5	Smooth Washer Ø26,2 X Ø44 X 4,75Mm	1
15	6020015986-4	Smooth Washer M20 (Ø21 x Ø37 x 3mm) Standart DIN 125	4
16	5530016065-3	Protection Fixation Support	1
17	5136016309-5	Upper Plate Of Protection	1
18	6020010394-0	Pressure Washer M10 Media	6
19	6020010443-1	Smooth Washer M10 Ø10,50XØ30,00X2,50mm(DIN 9021)	6
20	6020310822-5	Hexagonal Nut M10 X 1,50 Ma Cl8 Ch.17Mm H.8,00Mm	6
21	6020317544-5	French Head Bolt M10 X 1,50 X 30Mm Cl8.8 Rt	6
22	6020010448-2	Smooth Washer M8 Ø8,40XØ24,00X2,00mm(DIN 9021)	8
23	6020010004-5	Pressure Washer M8 Media	8
24	6020311269-9	Hexagonal Head Bolt M8 X 1,25 X 20Mm Cl8.8 Rt	8
25	6020310818-7	Hexagonal Nut M16 X 2,00 Ma Cl8 Ch.24Mm H.13,00Mm	4
26	6020310938-8	French Head Bolt M16 x 2,00 x 60mm CL8.8 RP	4
27A	6020010124-6	Pressure Washer M16 Media	6
27B	6020010124-6	Pressure Washer M16 Media	4
28	6020310935-3	Hexagonal Head Bolt M24 X 3,00 X 90mm CL8.8 RP	2
29A	6020311265-6	Hexagonal Nut M20 X 2,50 Ma Cl8 Ch.30Mm H.16,00Mm	7
29B	6020311265-6	Hexagonal Nut M20 X 2,50 Ma Cl8 Ch.30Mm H.16,00Mm	3
30A	6020310933-7	Hexagonal Head Bolt M16 x 2,00 x 75mm CL8.8 RP Special	2

Item	Code	Product description	All
30B	6020317861-4	Cab Screw. Hexagon M16 X 1.50 X 80mm CL8.8	2
31	6020010450-4	Smooth Washer M33 Ø31,00 x Ø56,00 x 4,00mm (DIN 125A)	2
32A	6020317443-0	Self-Locking Nut With Nylon M16 X 2,00 Ma Cl8 Ch.24Mm H.16,00Mm	2
32B	6020317434-1	Hex Nut M16 X 1.50 MB CL8 CH.24mm HLT.13mm	2
33	6020310660-5	Pin Ø28 x 105mm	2
34	6020010196-3	Pressure Washer M24 Media (	4
35A	6020010403-2	Pressure Washer M20 Media	7
35B	6020010403-2	Pressure Washer M20 Media	3
36	6020310810-1	Self-Locking Nut With Nylon 1.1/4" 12F Unf Gr5 Ch.1.7/8"	1
37	6020310934-5	French Head Bolt M24 x 3,00 x 80mm CL8.8 Special	2
38	6020312506-5	Hexagonal Head Bolt M20 X 2,50 X 160Mm Cl8.8 Rp	1
39	6020310338-0	Self-Locking Nut With Nylon M24 X 3,00 Ma Cl8 Ch.36Mm H.15,00Mm(White Galnanised)	2
40	6020310595-1	French Head Pin Ø1" X 105mm	1
41	6020390293-2	Lock Ø5,75 X 40Mm	3
42	6010601016-4	Small Plate	4
43	6020310188-3	Hexagonal Head Bolt M20 X 2,50 X 65Mm Cl8.8 Rp	1
44	6020010453-9	Smooth Washer M33 Ø34,00 X Ø60,00 X 5,00mm (Din 125A)	1
45	6020310457-2	Hexagonal Nut M24 X 3,00 Ma Cl8 Ch.36Mm H.19,00Mm	2
46	6020055613-8	Agricultural Cardan Shaft 1350 Mm (Closed)	1
*47	5252010120-9	Limiter Height Hitch	1
*48	5530018139-1	Depth Wheel W/Bearing	1
49B	6020016250-4	Wedge Lock Washer M16-DIN25201	4
50B	6020317613-1	Cab Screw. Hexagon M20 X 1.50 X 110mm CL8.8 RP	4
51B	6020310848-9	Self-locking Hex Nut with low nylon M20 X 1.50 MB CL8 CH.30mm HLT.22mm	4

• RDU 1500 W/Rotating Tray

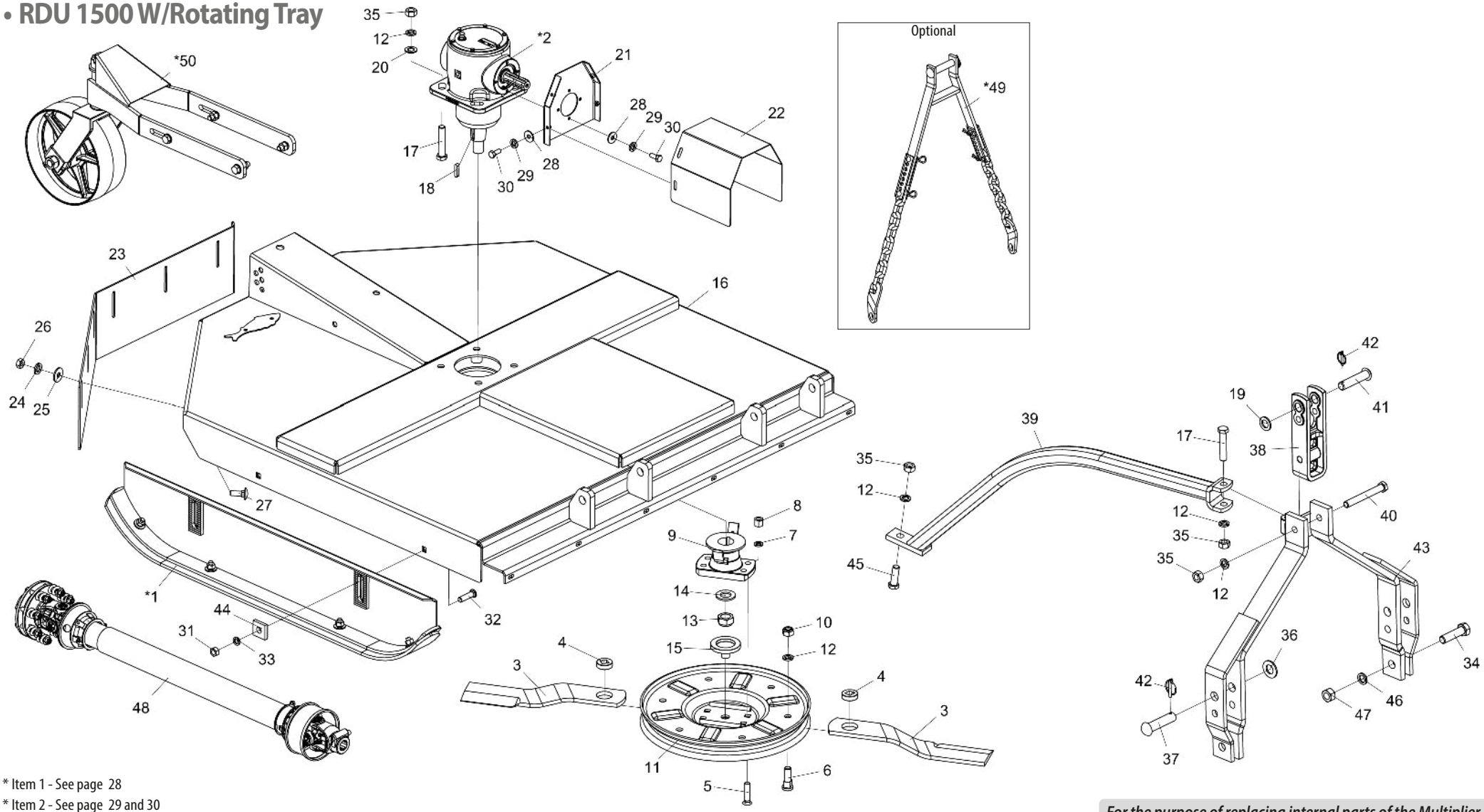

* Item 1 - See page 28
* Item 2 - See page 29 and 30
* Item 49 - See page 33
* Item 50 - See page 34

For the purpose of replacing internal parts of the Multiplier Transmission Box (2), check the manufacturer's name on the box.*

• Table RDU 1500 W/Rotating Tray

Item	Code	Product description	All
*1	5522010062-5	Complete Height Adjustment Ski	2
*2	6020057992-8	Transmision Box (BPN)	1
*2	6020059220-7	Transmission Box (COMER)	1
3	4625266010-0	Blade 605 X 3.1/2" X 1/2" Single Edge	2
4	5024070001-5	Smooth Washer Sq.20 X Ø49 X 15,00Mm	2
5	6020310227-8	Screw Type A3 5/8" X 2.3/4" 18F Unf1A Gr2 Rp	4
6	6020310946-9	Round Head Bolt M20 x 2,5 X 65mm CL8.8 RT	2
7	6020010412-1	Pressure Washer 5/8" Media Industry	4
8	6020310808-0	Double Hexagonal Nut 5/8" 18F Unf Gr5 Ch.15/16" H.21,50Mm	4
9	5368010891-5	Tray Fixation Bearing W/Scrapper	1
10	6020310837-3	Self-Locking Nut With Nylon M20 X 2,50 Ma Cl8 Ch.30Mm H.18,70Mm	2
11	5038010010-7	Rotating Tray	1
12	6020010403-2	Pressure Washer M20 Media	9
13	6020310810-1	Self-Locking Nut With Nylon 1.1/4" 12F Unf Gr5 Ch.1.7/8"	1
14	6020010453-9	Smooth Washer M33 Ø34,00 X Ø60,00 X 5,00mm (Din 125A)	1
15	6020110132-0	Guide Flange	1
16	5092010600-2	Blades Protection Box	1
17	6020317430-9	Hexagonal Head Bolt M20 X 2,50 X 100Mm Cl8.8 Rp	5
18	6020058892-7	Cotter Sq.3/8" x 44mm	1
19	6020010441-5	Smooth Washer M24 x Ø26xØ44x4mm	1
20	6020015986-4	Smooth Washer M20 (Ø21 x Ø37 x 3mm) Standart DIN 125	4
21	5530016065-3	Protection Fixation Support	1
22	5136016309-5	Upper Plate Of Protection	1
23	5464010382-8	Rear Protection 1250 mm	1
24	6020010394-0	Pressure Washer M10 Media	6
25	6020010443-1	Smooth Washer M10 Ø10,50XØ30,00X2,50mm(DIN 9021)	6
26	6020310822-5	Hexagonal Nut M10 X 1,50 Ma Cl8 Ch.17Mm H.8,00Mm	6
27	6020317544-5	French Head Bolt M10 X 1,50 X 30Mm Cl8.8 Rt	6
28	6020010448-2	Smooth Washer M8 Ø8,40XØ24,00X2,00mm(DIN 9021)	8
29	6020010004-5	Pressure Washer M8 Media	8
30	6020311269-9	Hexagonal Head Bolt M8 X 1,25 X 20Mm Cl8.8 Rt	8
31	6020310818-7	Hexagonal Nut M16 X 2,00 Ma Cl8 Ch.24Mm H.13,00Mm	4
32	6020310938-8	French Head Bolt M16 x 2,00 x 60mm CL8.8 RP	4
33	6020010124-6	Pressure Washer M16 Media	4
34	6020310935-3	Hexagonal Head Bolt M24 X 3,00 X 90mm CL8.8 RP	2
35	6020311265-6	Hexagonal Nut M20 X 2,50 Ma Cl8 Ch.30Mm H.16,00Mm	7
36	6020010450-4	Smooth Washer M33 Ø31,00 x Ø56,00 x 4,00mm (DIN 125A)	2
37	6020310660-5	Pin Ø28 x 105mm	2
38	6010602571-4	Hitch Shackle 290Mm(Categoria 1 and 2)	1
39	5530012174-7	Support Of Drawbar	1
40	6020312506-5	Hexagonal Head Bolt M20 X 2,50 X 160Mm Cl8.8 Rp	1
41	6020310595-1	French Head Pin Ø1" X 105mm	1
42	6020390293-2	Lock Ø5,75 X 40Mm	3
43	5084010146-8	Hitch Drawbar	1
44	6010601016-4	Small Plate	4
45	6020310992-2	Hexagonal Head Bolt M20 X 2,50 X 55Mm Cl8.8 Rp	1
46	6020010196-3	Pressure Washer M24 Media (	2
47	6020310457-2	Hexagonal Nut M24 X 3,00 Ma Cl8 Ch.36Mm H.19,00Mm	2
48	6020055613-8	Agricultural Cardan Shaft 1350 Mm (Closed)	1
*49	5252010120-9	Limiter Height Hitch	1
*50	5530018139-1	Depth Wheel W/Bearing	1

• RD 1700 W/Support

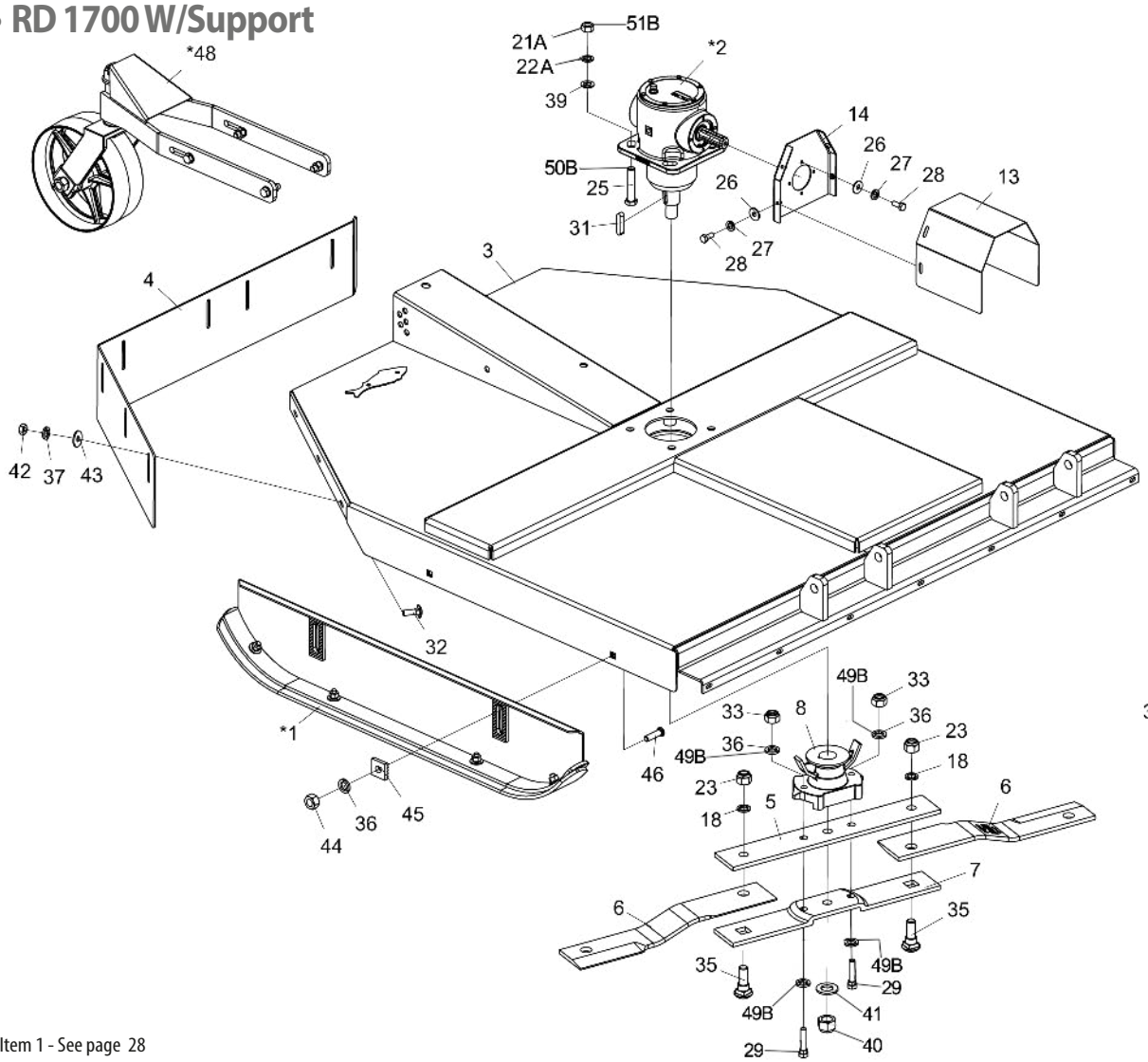

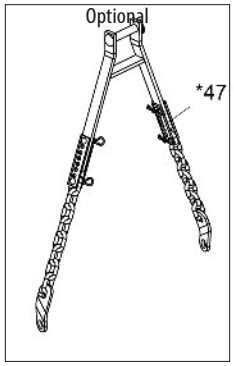

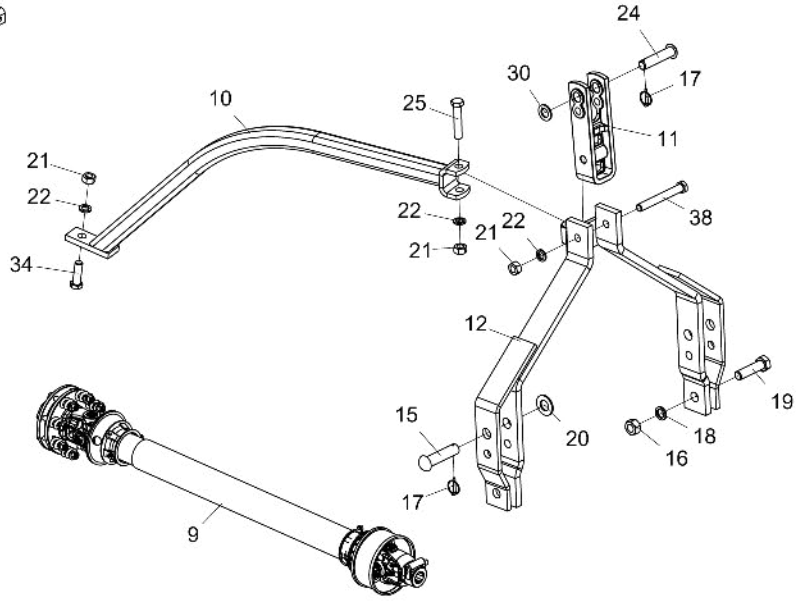

* Item 1 - See page 28
* Item 2 - See page 29 and 30
* Item 47 - See page 33
* Item 48 - See page 34

Note: Items 5A,7A,21A,22A,25A,29A,33A and 36A, use until 10/2023, and items 5B,7B,21B,22B,25B,29B,33B,36B,49B,50B and 51B use from 11/2023.

For the purpose of replacing internal parts of the Multiplier Transmission Box (2), check the manufacturer's name on the box.*

• Table RD 1700 W/Support

Item	Code	Product description	All
*1	5522010062-5	Complete Height Adjustment Ski	2
*2	6020057992-8	Transmision Box (BPN)	1
*2	6020059220-7	Transmission Box (COMER)	1
3	5092010602-9	Blades Protection Box	1
4	5464010383-6	Rear Protection 1730 mm	1
5A	5040140011-4	Upper Blades Support Bar	1
5B	5040011074-0	Upper Blades Support Bar	1
6	4625266256-1	Produto Sem Tradução Cadastrada Para Idioma Selecionado!	2
7A	5040140012-2	Lower Blades Support Bar	1
7B	5040011073-2	Lower Blades Support Bar	1
8	5368010141-4	Fixation Bearing Of Blades With Scraper	1
9	6020055613-8	Agricultural Cardan Shaft 1350 Mm (Closed)	1
10	5530012174-7	Support Of Drawbar	1
11	6010602571-4	Hitch Shackle 290Mm(Categoria 1 and 2)	1
12	5084010146-8	Hitch Drawbar	1
13	5136016309-5	Upper Plate Of Protection	1
14	5530016065-3	Protection Fixation Support	1
15	6020310660-5	Pin Ø28 x 105mm	2
16	6020310457-2	Hexagonal Nut M24 X 3,00 Ma Cl8 Ch.36Mm H.19,00Mm	2
17	6020390293-2	Lock Ø5,75 X 40Mm	3
18	6020010196-3	Pressure Washer M24 Media (	4
19	6020310935-3	Hexagonal Head Bolt M24 X 3,00 X 90mm CL8.8 RP	2
20	6020010450-4	Smooth Washer M33 Ø31,00 x Ø56,00 x 4,00mm (DIN 125A)	2
21A	6020311265-6	Hexagonal Nut M20 X 2,50 Ma Cl8 Ch.30Mm H.16,00Mm	7
21B	6020311265-6	Hexagonal Nut M20 X 2,50 Ma Cl8 Ch.30Mm H.16,00Mm	3
22A	6020010403-2	Pressure Washer M20 Media	7
22B	6020010403-2	Pressure Washer M20 Media	3
23	6020310338-0	Self-Locking Nut With Nylon M24 X 3,00 Ma Cl8 Ch.36Mm H.15,00Mm(White Galnanised)	2
24	6020310595-1	French Head Pin Ø1" X 105mm	1
25A	6020317430-9	Hexagonal Head Bolt M20 X 2,50 X 100Mm Cl8.8 Rp	5
25B	6020317430-9	Hexagonal Head Bolt M20 X 2,50 X 100Mm Cl8.8 Rp	1
26	6020010448-2	Smooth Washer M8 Ø8,40XØ24,00X2,00mm(DIN 9021)	8
27	6020010004-5	Pressure Washer M8 Media	8
28	6020311269-9	Hexagonal Head Bolt M8 X 1,25 X 20Mm Cl8.8 Rt	8
29A	6020310933-7	Hexagonal Head Bolt M16 x 2,00 x 75mm CL8.8 RP Special	2
29B	6020317861-4	Head screw. Hexagon M16 X 1.50 X 80mm CL8.8 RP	2

Item	Code	Product description	All
30	5024010039-5	Smooth Washer Ø26,2 X Ø44 X 4,75Mm	1
31	6020058892-7	Cotter Sq.3/8" x 44mm	1
32	6020317544-5	French Head Bolt M10 X 1,50 X 30Mm Cl8.8 Rt	7
33A	6020317443-0	Self-Locking Nut With Nylon M16 X 2,00 Ma Cl8 Ch.24Mm H.16,00Mm	2
33B	6020317434-1	Hex Nut M16 X 1.50 MB CL8 CH.24mm HLT.13mm	2
34	6020310188-3	Hexagonal Head Bolt M20 X 2,50 X 65Mm Cl8.8 Rp	1
35	6020310934-5	French Head Bolt M24 x 3,00 x 80mm CL8.8 Special	2
36A	6020010124-6	Pressure Washer M16 Media	6
36B	6020010124-6	Pressure Washer M16 Media	4
37	6020010394-0	Pressure Washer M10 Media	7
38	6020312506-5	Hexagonal Head Bolt M20 X 2,50 X 160Mm Cl8.8 Rp	1
39	6020015986-4	Smooth Washer M20 (Ø21 x Ø37 x 3mm) Standart DIN 125	4
40	6020310810-1	Self-Locking Nut With Nylon 1.1/4" 12F Unf Gr5 Ch.1.7/8"	1
41	6020010453-9	Smooth Washer M33 Ø34,00 X Ø60,00 X 5,00mm (Din 125A)	1
42	6020310822-5	Hexagonal Nut M10 X 1,50 Ma Cl8 Ch.17Mm H.8,00Mm	7
43	6020010443-1	Smooth Washer M10 Ø10,50XØ30,00X2,50mm(DIN 9021)	7
44	6020310818-7	Hexagonal Nut M16 X 2,00 Ma Cl8 Ch.24Mm H.13,00Mm	4
45	6010601016-4	Small Plate	4
46	6020310938-8	French Head Bolt M16 x 2,00 x 60mm CL8.8 RP	4
*47	5252010120-9	Limiter Height Hitch	1
*48	5530018139-1	Depth Wheel W/Bearing	1
49B	6020016250-4	Wedge Lock Washer M16-DIN25201	4
50B	6020317613-1	Head screw. Hexagon M20 X 1.50 X 110mm CL8.8 RP	4
51B	6020310848-9	Sext nut. Self-locking with low nylon M20 X 1.50 MB CL8 CH.30mm HLT.22mm	4

• RD 1700 W/Rotating Tray

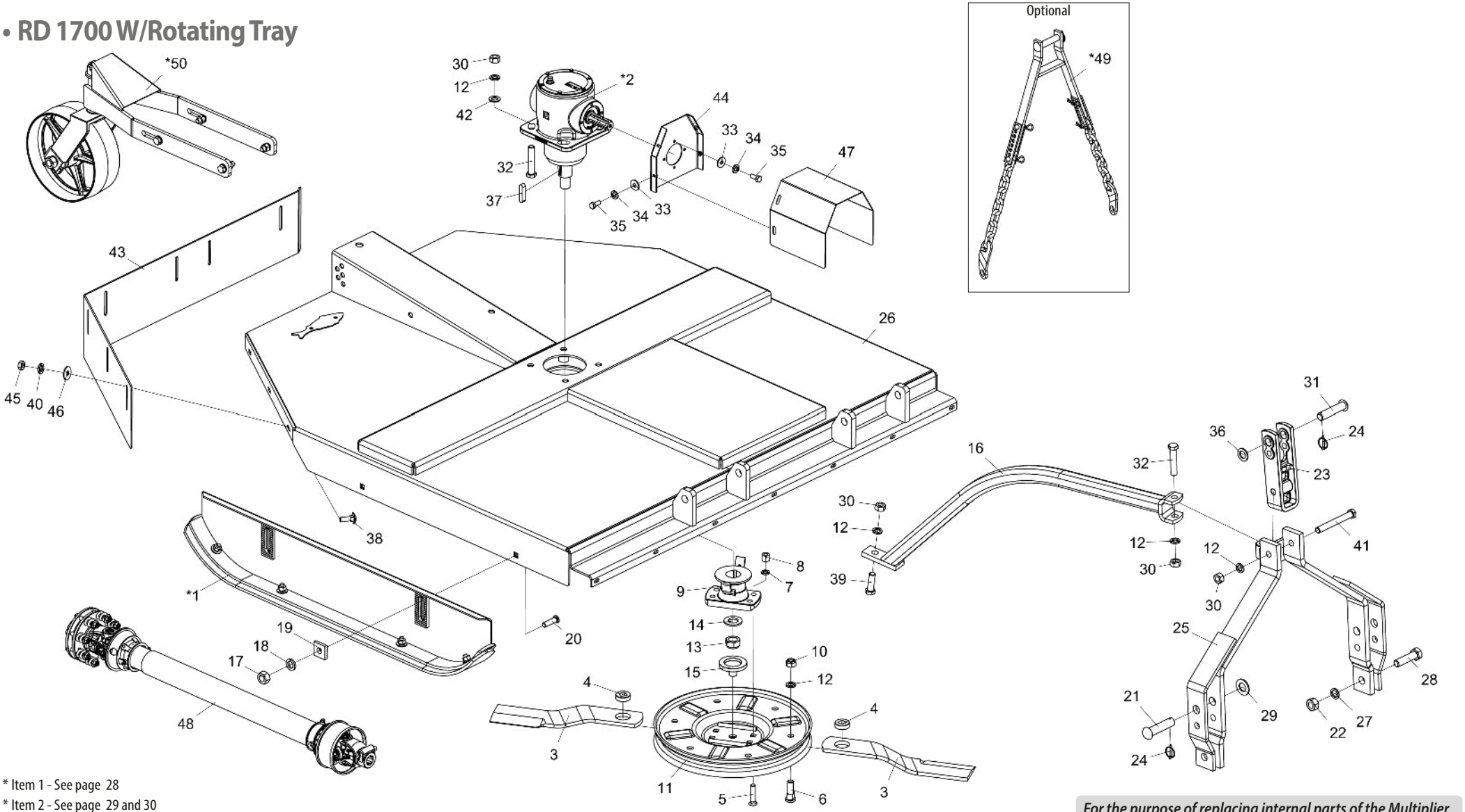

* Item 1 - See page 28
* Item 2 - See page 29 and 30
* Item 49 - See page 33
* Item 50 - See page 34

For the purpose of replacing internal parts of the Multiplier Transmission Box (2), check the manufacturer's name on the box.*

• Table RD 1700 W/Rotating Tray

Item	Code	Product description	All
*1	5522010062-5	Complete Height Adjustment Ski	2
*2	6020057992-8	Transmision Box (BPN)	1
*2	6020059220-7	Transmission Box (COMER)	1
3	4625266816-0	Produto Sem Tradução Cadastrada Para Idioma Selecionado!	2
4	5024070001-5	Smooth Washer Sq.20 X Ø49 X 15,00Mm	2
5	6020310227-8	Screw Type A3 5/8" X 2.3/4" 18F Unf1A Gr2 Rp	4
6	6020310946-9	Round Head Bolt M20 x 2,5 X 65mm CL8.8 RT	2
7	6020010412-1	Pressure Washer 5/8" Media Industry	4
8	6020310808-0	Double Hexagonal Nut 5/8" 18F Unf Gr5 Ch.15/16" H.21,50Mm	4
9	5368010891-5	Tray Fixation Bearing W/Scrapper	1
10	6020310837-3	Self-Locking Nut With Nylon M20 X 2,50 Ma Cl8 Ch.30Mm H.18,70Mm	2
11	5038010010-7	Rotating Tray	1
12	6020010403-2	Pressure Washer M20 Media	9
13	6020310810-1	Self-Locking Nut With Nylon 1.1/4" 12F Unf Gr5 Ch.1.7/8"	1
14	6020010453-9	Smooth Washer M33 Ø34,00 X Ø60,00 X 5,00mm (Din 125A)	1
15	6020110132-0	Guide Flange	1
16	5530012174-7	Support Of Drawbar	1
17	6020310818-7	Hexagonal Nut M16 X 2,00 Ma Cl8 Ch.24Mm H.13,00Mm	4
18	6020010124-6	Pressure Washer M16 Media	4
19	6010601016-4	Small Plate	4
20	6020310938-8	French Head Bolt M16 x 2,00 x 60mm CL8.8 RP	4
21	6020310660-5	Pin Ø28 x 105mm	2
22	6020310457-2	Hexagonal Nut M24 X 3,00 Ma Cl8 Ch.36Mm H.19,00Mm	2
23	6010602571-4	Hitch Shackle 290Mm(Categoria 1 and 2)	1
24	6020390293-2	Lock Ø5,75 X 40Mm	3
25	5084010146-8	Hitch Drawbar	1
26	5092010602-9	Blades Protection Box	1
27	6020010196-3	Pressure Washer M24 Media (	2
28	6020310935-3	Hexagonal Head Bolt M24 X 3,00 X 90mm CL8.8 RP	2
29	6020010450-4	Smooth Washer M33 Ø31,00 x Ø56,00 x 4,00mm (DIN 125A)	2
30	6020311265-6	Hexagonal Nut M20 X 2,50 Ma Cl8 Ch.30Mm H.16,00Mm	7
31	6020310595-1	French Head Pin Ø1"X 105mm	1
32	6020317430-9	Hexagonal Head Bolt M20 X 2,50 X 100Mm Cl8.8 Rp	5
33	6020010448-2	Smooth Washer M8 Ø8,40XØ24,00X2,00mm(DIN 9021)	8
34	6020010004-5	Pressure Washer M8 Media	8

Item	Code	Product description	All
35	6020311269-9	Hexagonal Head Bolt M8 X 1,25 X 20Mm Cl8.8 Rt	8
36	6020010441-5	Smooth Washer M24 x Ø26xØ44x4mm	1
37	6020058892-7	Cotter Sq.3/8" x 44mm	1
38	6020317544-5	French Head Bolt M10 X 1,50 X 30Mm Cl8.8 Rt	7
39	6020310992-2	Hexagonal Head Bolt M20 X 2,50 X 55Mm Cl8.8 Rp	1
40	6020010394-0	Pressure Washer M10 Media	7
41	6020312506-5	Hexagonal Head Bolt M20 X 2,50 X 160Mm Cl8.8 Rp	1
42	6020015986-4	Smooth Washer M20 (Ø21 x Ø37 x 3mm) Standart DIN 125	4
43	5464010383-6	Rear Protection 1730 mm	1
44	5530016065-3	Protection Fixation Support	1
45	6020310822-5	Hexagonal Nut M10 X 1,50 Ma Cl8 Ch.17Mm H.8,00Mm	7
46	6020010443-1	Smooth Washer M10 Ø10,50XØ30,00X2,50mm(DIN 9021)	7
47	5136016309-5	Upper Plate Of Protection	1
48	6020055613-8	Agricultural Cardan Shaft 1350 Mm (Closed)	1
*49	5252010120-9	Limiter Height Hitch	1
*50	5530018139-1	Depth Wheel W/Bearing	1

• RDU 1700 W/Support

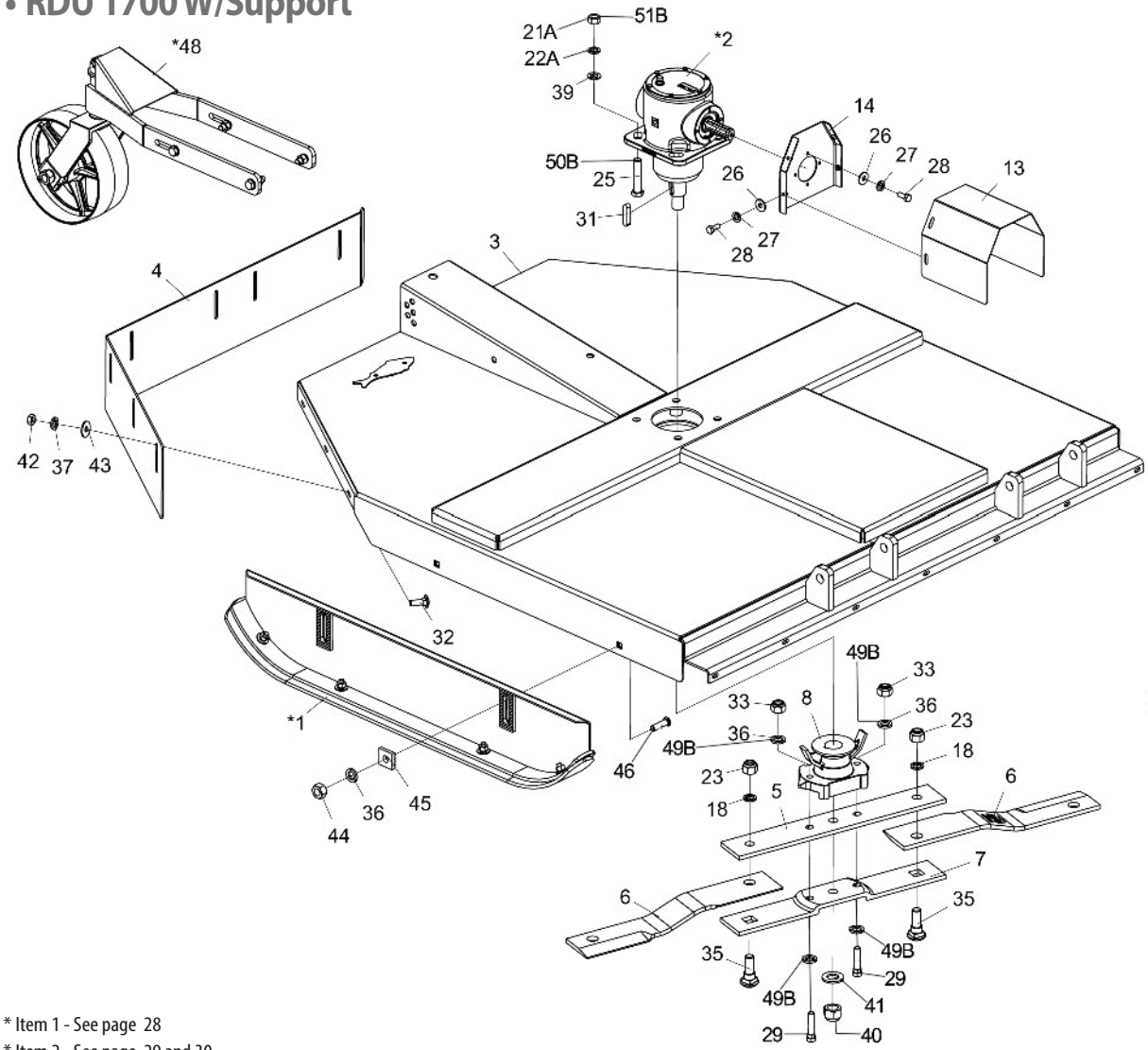

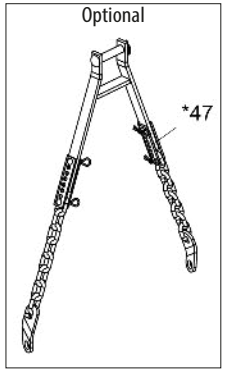

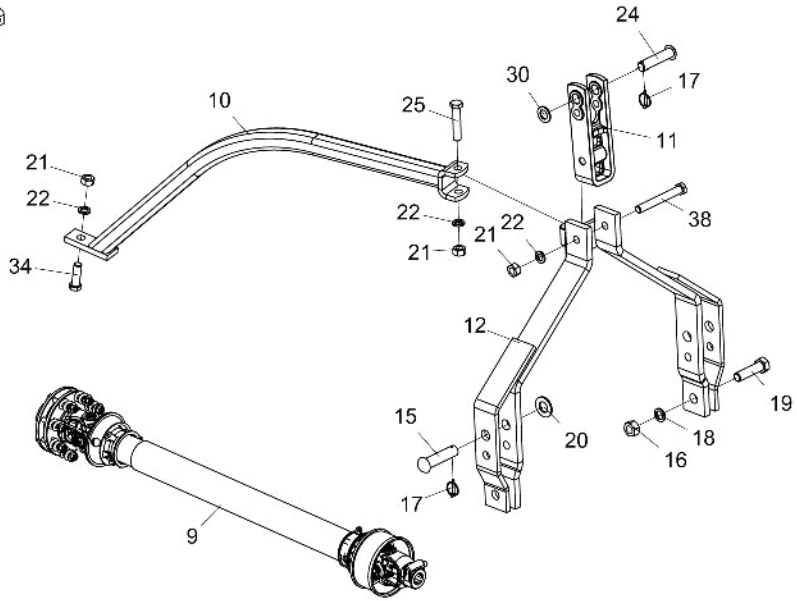

* Item 1 - See page 28
* Item 2 - See page 29 and 30
* Item 47 - See page 33
* Item 48 - See page 34

Note: Items 5A,7A,21A,22A,25A,29A,33A and 36A, use until 10/2023, and items 5B,7B,21B,22B,25B,29B,33B,36B,49B,50B and 51B use from 11/2023.

For the purpose of replacing internal parts of the Multiplier Transmission Box (2), check the manufacturer's name on the box.*

• Table RDU 1700 W/Support

Item	Code	Product description	All
*1	5522010062-5	Complete Height Adjustment Ski	2
*2	6020057992-8	Transmision Box (BPN)	1
*2	6020059220-7	Transmission Box (COMER)	1
3	5092010602-9	Blades Protection Box	1
4	5464010383-6	Rear Protection 1730 mm	1
5A	5040140011-4	Upper Blades Support Bar	1
5B	5040011074-0	Upper Blades Support Bar	1
6	4625266256-1	Produto Sem Tradução Cadastrada Para Idioma Selecionado!	2
7A	5040140012-2	Lower Blades Support Bar	1
7B	5040011073-2	Lower Blades Support Bar	1
8	5368010141-4	Fixation Bearing Of Blades With Scraper	1
9	6020055613-8	Agricultural Cardan Shaft 1350 Mm (Closed)	1
10	5530012174-7	Support Of Drawbar	1
11	6010602571-4	Hitch Shackle 290Mm(Categoria 1 and 2)	1
12	5084010146-8	Hitch Drawbar	1
13	5136016309-5	Upper Plate Of Protection	1
14	5530016065-3	Protection Fixation Support	1
15	6020310660-5	Pin Ø28 x 105mm	2
16	6020310457-2	Hexagonal Nut M24 X 3,00 Ma Cl8 Ch.36Mm H.19,00Mm	2
17	6020390293-2	Lock Ø5,75 X 40Mm	3
18	6020010196-3	Pressure Washer M24 Media (	4
19	6020310935-3	Hexagonal Head Bolt M24 X 3,00 X 90mm CL8.8 RP	2
20	6020010450-4	Smooth Washer M33 Ø31,00 x Ø56,00 x 4,00mm (DIN 125A)	2
21A	6020311265-6	Hexagonal Nut M20 X 2,50 Ma Cl8 Ch.30Mm H.16,00Mm	7
21B	6020311265-6	Hexagonal Nut M20 X 2,50 Ma Cl8 Ch.30Mm H.16,00Mm	3
22A	6020010403-2	Pressure Washer M20 Media	7
22B	6020010403-2	Pressure Washer M20 Media	3
23	6020310338-0	Self-Locking Nut With Nylon M24 X 3,00 Ma Cl8 Ch.36Mm H.15,00Mm(White Galnanised)	2
24	6020310595-1	French Head Pin Ø1" X 105mm	1
25A	6020317430-9	Hexagonal Head Bolt M20 X 2,50 X 100Mm Cl8.8 Rp	5
25B	6020317430-9	Hexagonal Head Bolt M20 X 2,50 X 100Mm Cl8.8 Rp	1
26	6020010448-2	Smooth Washer M8 Ø8,40XØ24,00X2,00mm(DIN 9021)	8
27	6020010004-5	Pressure Washer M8 Media	8
28	6020311269-9	Hexagonal Head Bolt M8 X 1,25 X 20Mm Cl8.8 Rt	8
29A	6020310933-7	Hexagonal Head Bolt M16 x 2,00 x 75mm CL8.8 RP Special	2
29B	6020317861-4	Hex head screw M16 X 1.50 X 80mm CL8.8 RP	2

Item	Code	Product description	All
30	5024010039-5	Smooth Washer Ø26,2 X Ø44 X 4,75Mm	1
31	6020058892-7	Cotter Sq.3/8" x 44mm	1
32	6020317544-5	French Head Bolt M10 X 1,50 X 30Mm Cl8.8 Rt	7
33A	6020317443-0	Self-Locking Nut With Nylon M16 X 2,00 Ma Cl8 Ch.24Mm H.16,00Mm	2
33B	6020317434-1	Hex Nut M16 X 1.50 MB CL8 CH.24mm HLT.13mm	2
34	6020310188-3	Hexagonal Head Bolt M20 X 2,50 X 65Mm Cl8.8 Rp	1
35	6020310934-5	French Head Bolt M24 x 3,00 x 80mm CL8.8 Special	2
36A	6020010124-6	Pressure Washer M16 Media	6
36B	6020010124-6	Pressure Washer M16 Media	4
37	6020010394-0	Pressure Washer M10 Media	7
38	6020312506-5	Hexagonal Head Bolt M20 X 2,50 X 160Mm Cl8.8 Rp	1
39	6020015986-4	Smooth Washer M20 (Ø21 x Ø37 x 3mm) Standart DIN 125	4
40	6020310810-1	Self-Locking Nut With Nylon 1.1/4" 12F Unf Gr5 Ch.1.7/8"	1
41	6020010453-9	Smooth Washer M33 Ø34,00 X Ø60,00 X 5,00mm (Din 125A)	1
42	6020310822-5	Hexagonal Nut M10 X 1,50 Ma Cl8 Ch.17Mm H.8,00Mm	7
43	6020010443-1	Smooth Washer M10 Ø10,50XØ30,00X2,50mm(DIN 9021)	7
44	6020310818-7	Hexagonal Nut M16 X 2,00 Ma Cl8 Ch.24Mm H.13,00Mm	4
45	6010601016-4	Small Plate	4
46	6020310938-8	French Head Bolt M16 x 2,00 x 60mm CL8.8 RP	4
*47	5252010120-9	Limiter Height Hitch	1
*48	5530018139-1	Depth Wheel W/Bearing	1
49B	6020016250-4	Wedge Lock Washer M16-DIN25201	4
50B	6020317613-1	Head screw. Hexagon M20 X 1.50 X 110mm CL8.8 RP	4
51B	6020310848-9	Self-Locking Hex Nut W/low nylon M20 X 1.50 MB CL8 CH.30mm HLT.22mm	4

• RDU 1700 W/Rotating Tray

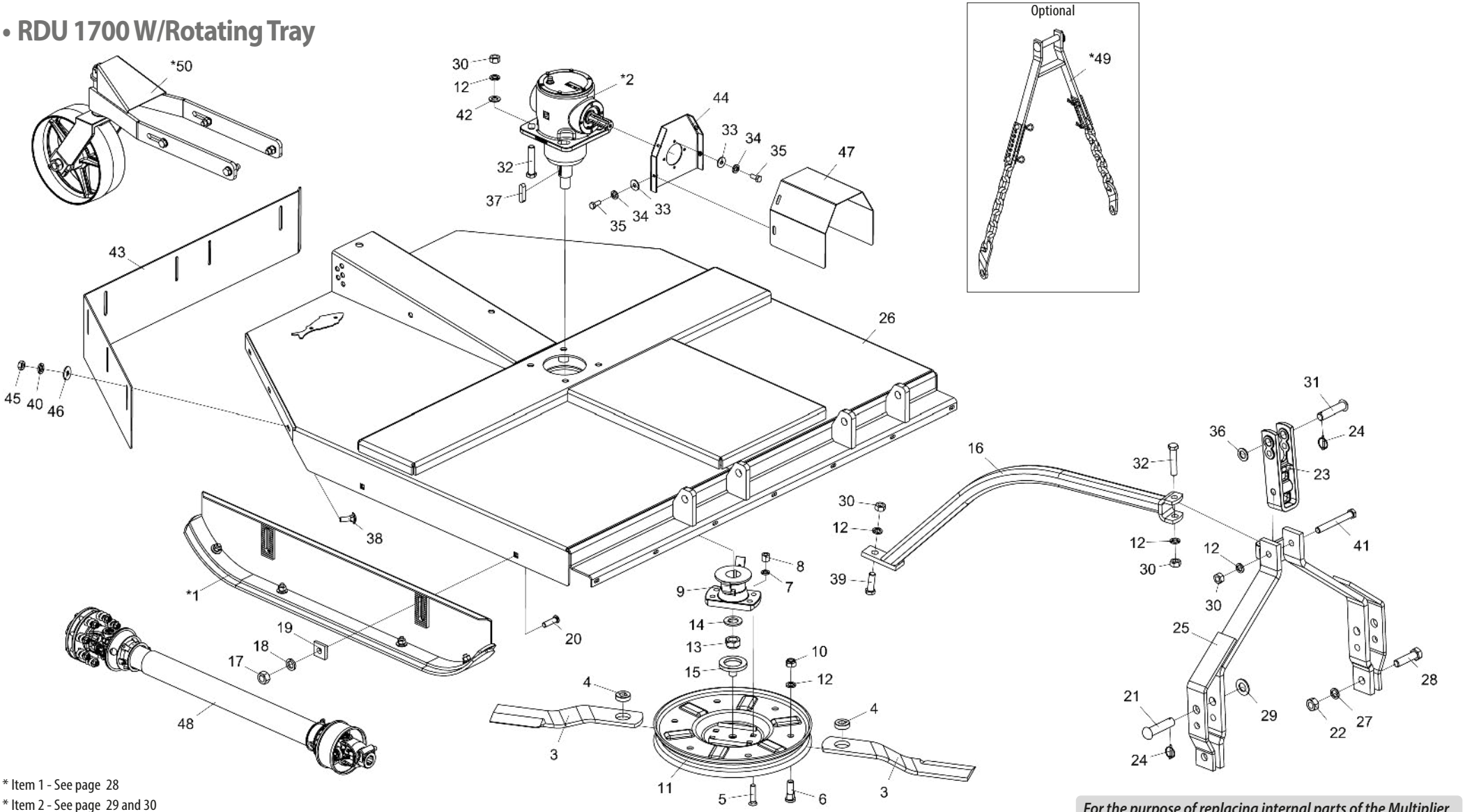

* Item 1 - See page 28
* Item 2 - See page 29 and 30
* Item 49 - See page 33
* Item 50 - See page 34

For the purpose of replacing internal parts of the Multiplier Transmission Box (2), check the manufacturer's name on the box.*

• Table RDU 1700 W/Rotating Tray

Item	Code	Product description	All
*1	5522010062-5	Complete Height Adjustment Ski	2
*2	6020057992-8	Transmision Box (BPN)	1
*2	6020059220-7	Transmission Box (COMER)	1
3	4625266816-0	Produto Sem Tradução Cadastrada Para Idioma Selecionado!	2
4	5024070001-5	Smooth Washer Sq.20 X Ø49 X 15,00Mm	2
5	6020310227-8	Screw Type A3 5/8" X 2.3/4" 18F Unf1A Gr2 Rp	4
6	6020310946-9	Round Head Bolt M20 x 2,5 X 65mm CL8.8 RT	2
7	6020010412-1	Pressure Washer 5/8" Media Industry	4
8	6020310808-0	Double Hexagonal Nut 5/8" 18F Unf Gr5 Ch.15/16" H.21,50Mm	4
9	5368010891-5	Tray Fixation Bearing W/Scrapper	1
10	6020310837-3	Self-Locking Nut With Nylon M20 X 2,50 Ma Cl8 Ch.30Mm H.18,70Mm	2
11	5038010010-7	Rotating Tray	1
12	6020010403-2	Pressure Washer M20 Media	9
13	6020310810-1	Self-Locking Nut With Nylon 1.1/4" 12F Unf Gr5 Ch.1.7/8"	1
14	6020010453-9	Smooth Washer M33 Ø34,00 X Ø60,00 X 5,00mm (Din 125A)	1
15	6020110132-0	Guide Flange	1
16	5530012174-7	Support Of Drawbar	1
17	6020310818-7	Hexagonal Nut M16 X 2,00 Ma Cl8 Ch.24Mm H.13,00Mm	4
18	6020010124-6	Pressure Washer M16 Media	4
19	6010601016-4	Small Plate	4
20	6020310938-8	French Head Bolt M16 x 2,00 x 60mm CL8.8 RP	4
21	6020310660-5	Pin Ø28 x 105mm	2
22	6020310457-2	Hexagonal Nut M24 X 3,00 Ma Cl8 Ch.36Mm H.19,00Mm	2
23	6010602571-4	Hitch Shackle 290Mm(Categoria 1 and 2)	1
24	6020390293-2	Lock Ø5,75 X 40Mm	3
25	5084010146-8	Hitch Drawbar	1
26	5092010602-9	Blades Protection Box	1
27	6020010196-3	Pressure Washer M24 Media (	2
28	6020310935-3	Hexagonal Head Bolt M24 X 3,00 X 90mm CL8.8 RP	2
29	6020010450-4	Smooth Washer M33 Ø31,00 x Ø56,00 x 4,00mm (DIN 125A)	2
30	6020311265-6	Hexagonal Nut M20 X 2,50 Ma Cl8 Ch.30Mm H.16,00Mm	7
31	6020310595-1	French Head Pin Ø1" X 105mm	1
32	6020317430-9	Hexagonal Head Bolt M20 X 2,50 X 100Mm Cl8.8 Rp	5
33	6020010448-2	Smooth Washer M8 Ø8,40XØ24,00X2,00mm(DIN 9021)	8
34	6020010004-5	Pressure Washer M8 Media	8

Item	Code	Product description	All
35	6020311269-9	Hexagonal Head Bolt M8 X 1,25 X 20Mm Cl8.8 Rt	8
36	6020010441-5	Smooth Washer M24 x Ø26xØ44x4mm	1
37	6020058892-7	Cotter Sq.3/8" x 44mm	1
38	6020317544-5	French Head Bolt M10 X 1,50 X 30Mm Cl8.8 Rt	7
39	6020310992-2	Hexagonal Head Bolt M20 X 2,50 X 55Mm Cl8.8 Rp	1
40	6020010394-0	Pressure Washer M10 Media	7
41	6020312506-5	Hexagonal Head Bolt M20 X 2,50 X 160Mm Cl8.8 Rp	1
42	6020015986-4	Smooth Washer M20 (Ø21 x Ø37 x 3mm) Standart DIN 125	4
43	5464010383-6	Rear Protection 1730 mm	1
44	5530016065-3	Protection Fixation Support	1
45	6020310822-5	Hexagonal Nut M10 X 1,50 Ma Cl8 Ch.17Mm H.8,00Mm	7
46	6020010443-1	Smooth Washer M10 Ø10,50XØ30,00X2,50mm(DIN 9021)	7
47	5136016309-5	Upper Plate Of Protection	1
48	6020055613-8	Agricultural Cardan Shaft 1350 Mm (Closed)	1
*49	5252010120-9	Limiter Height Hitch	1
*50	5530018139-1	Depth Wheel W/Bearing	1

• Complete Height Adjustment Ski

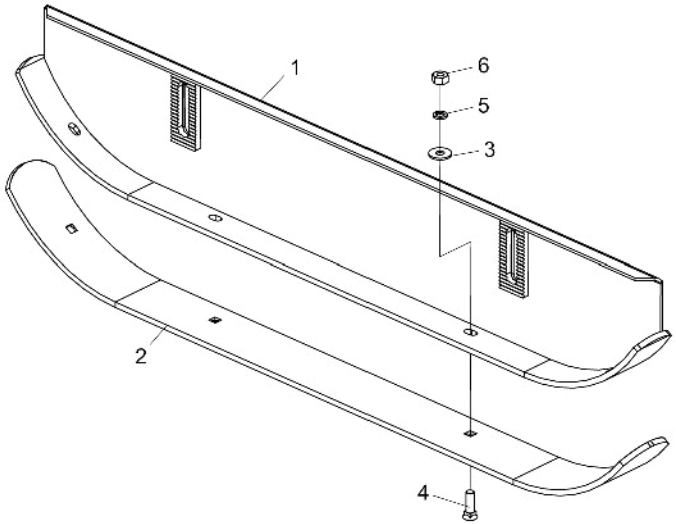

Item	Code	Product description	All
1	5522010061-7	Cutting Adjustment Ski	1
2	5040120729-2	Bar Of 102 X 1435 X 9,50Mm	1
3	5024010068-9	Smooth Washer Ø13,3 X Ø35,5 X 3,00Mm	4
4	6020310232-4	Screw Type A3 1/2" X 1.3/4" 12F Gr2 Rp	4
5	6020010410-5	Pressure Washer 1/2" Media Industry	4
6	6020310754-7	Hexagonal Nut 1/2" 12F W Gr5 Ch.7/8" Height 12,00Mm	4

• Transmision Box (BPN)

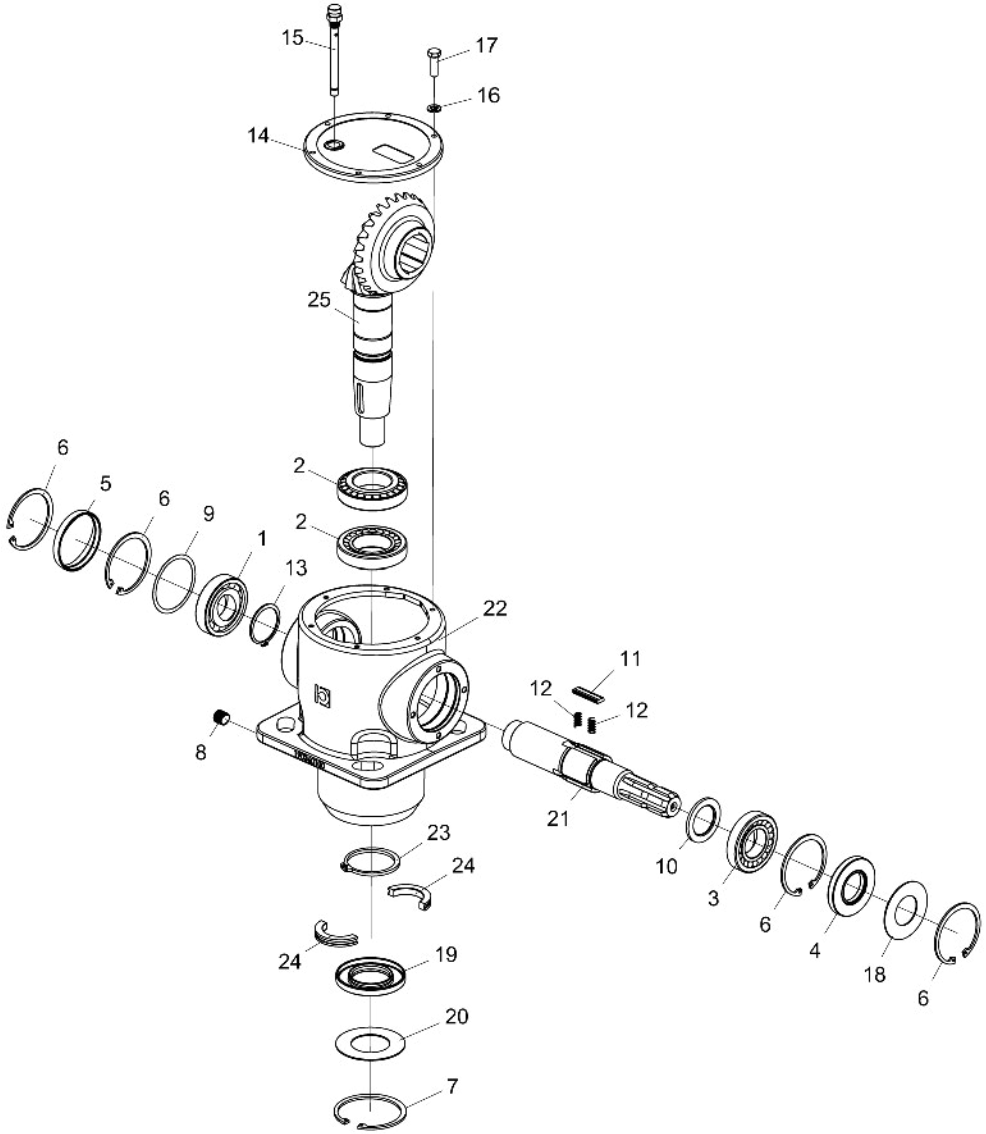

Item	Code	Product description	All
1	6020350952-1	Bearing 6208	1
2	6020350951-3	Bearing 30208	2
3	6020350953-0	Bearing 30210	1
4	6020350949-1	Retainer	1
5	6020395050-3	Cover Ø80 X 10	1
6	6020015907-4	Elastic Ring For Hole I-80 X 2,5	4
7	6020015908-2	Elastic Ring For Hole I-90 X 3,0	1
8	6020030755-3	Plug 3/8"	1
9	6020058142-6	Wedge Spacing Ø69,3 X Ø79,7 X 0,4	1
10	6020015910-4	Washer	1
11	6020058144-2	Special Cotter 5 X 13 X 44	3
12	6020251706-7	Spring 3,8 X 4,8	6
13	6020015905-8	Elastic Ring For Shaft E-50 X 2,0	1
14	6020395049-0	Cast Cover For Hopper 3068	1
15	6020350948-3	Vent With Level Stick 3/8" Gas Conic	1
16	6020015909-0	Pressure Washer M6	6
17	6020310270-7	Hexagonal Head Bolt M6 x 20mm	6
18	6020072030-2	Protection Disc Ø41 X Ø79,5 X 1,6	1
19	6020350950-5	Retainer Ø50,00 X Ø90,00 X 10,00Mm	1
20	6020072029-9	Deflector Ø50,5 X Ø90 X 1,6	1
21	6020090674-0	Shaft Xy Box 3068 Mont."R"	1
22	6020058143-4	Spare Housing	1
23	6020015906-6	Elastic Ring For Shaft E-65 X 4,0	1
24	6020015904-0	Ring Ø46 X Ø65 X 10	2
25	6020058134-5	Crown Z=25 - With Free Rotating/ Helical Pinion Z=13/Cx.3068	1

• Transmision Box (Comer)

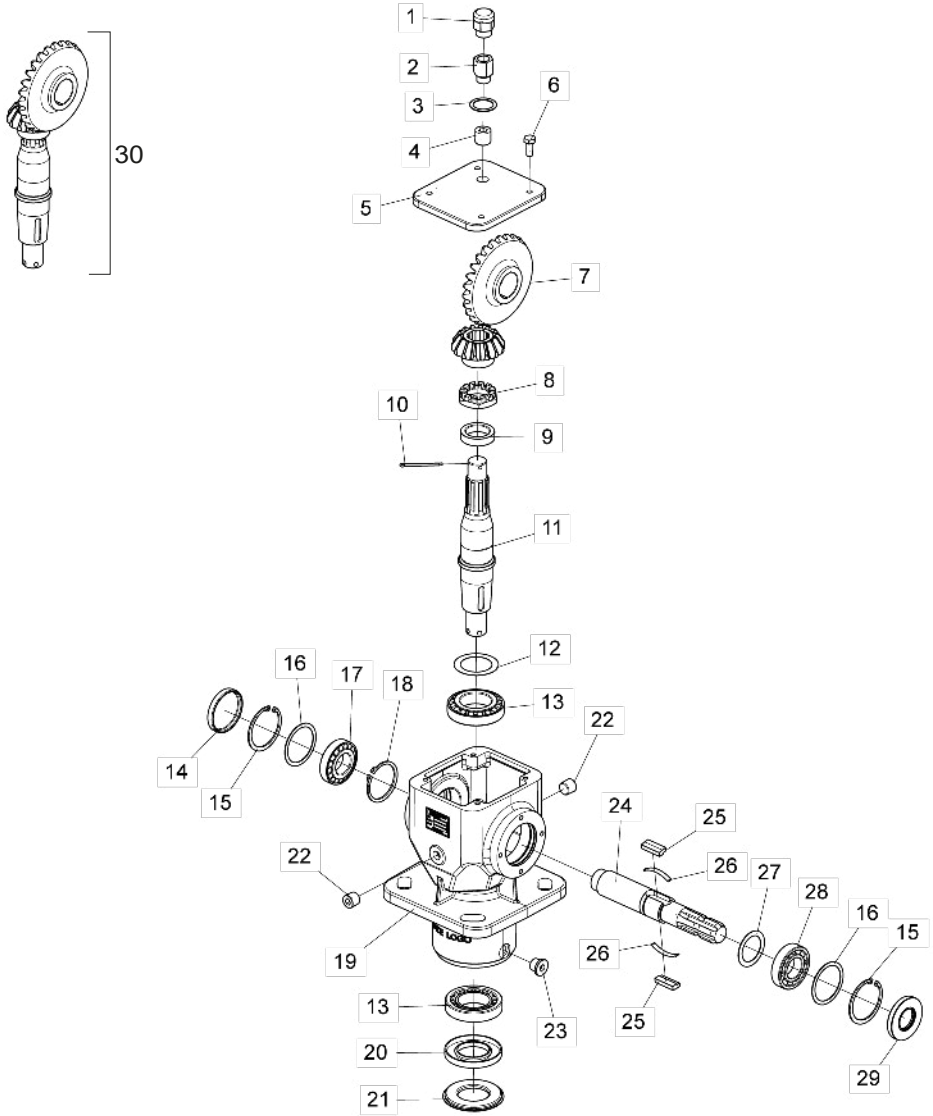

Item	Code	Product description	All
1	6020350992-0	Respire 1/2"BSP (Comer 8.6.7.00269)	1
2	6020310967-1	Protractor 1/2"BSP (Comer 8.6.0.01113)	1
3	6020059228-2	Shim 1/2"BSP 21.46x28x1 (Comer 8.3.3.01114)	1
4	6020030858-4	Plug for Allen Wrench 1/2" BSP (Comer 8.6.6.00088)	1
5	6020395146-1	Transmission Box Cover - Comer (0.140.1302.00)	1
6	6020311269-9	Hexagonal Head Bolt M8 X 1,25 X 20Mm CI8.8 Rt	4
7	6020059223-1	Crown M5.64 Z27 (Comer 0.140.6010.00) / Crown M5.64 Z14 (0.140.5010.00) Output Shaft (0.140.3007.00)	1
8	6020310965-5	Castle Nut W/Crown M30 x 1,5mm	1
9	6020095888-0	Espacing 30.3x43x10.5 (Comer 0.132.7109.00)	1
10	6020059229-0	Cotterpin M4 x 55mm (Comer 8.4.7.01111)	1
11	6020095890-2	Output Shaft (Comer 0.140.3009.00)	1
12	6020059225-8	Shim 50.3x70.3 (Comer 0.712.7500.00)	1
13	6020350054-0	Bearing 30210	2
14	6020395145-3	Cover Ø72 x 10mm (Comer 8.7.0.00744)	1
15	6020016003-0	Elastic Ring I75 x 2,5mm (Comer 8.5.2.00131)	2
16	6020059226-6	Shim 60.3x71.7 (Comer 0.248.7500.00)	2
17	6020350080-0	Bearing 30207	1
18	6020016004-8	Elastic Ring E40 x 1,8mm (Comer 8.5.1.00712)	1
19	6020061257-7	Machined Housing (Comer 0.140.0501.00)	1
20	6020350991-2	Retainer 50x90x10 (Comer 8.7.1.01107)	1
21	6020395147-0	Lower Protection Cover (Comer 0.139.7100.00)	1
22	6020030859-2	Plug for Allen Wrench 3/8"BSP	2
23	6020030860-6	Magnetic Plug for Allen Wrench 3/8"BSP (Comer 9510.106.025)	1
24	6020096139-3	Input Shaft 3/8 Z6 (Comer 0.140.2010.00)	1
25	6020059227-4	Cutter 13 x 7 x 31mm (Comer 0.267.7109.00)	2
26	6020251948-5	Cutter Lock Spring	2
27	6020059224-0	Shim 48. 0x35.3x1 (Comer 0.313.7000.00)	1
28	6020350022-2	Bearing 6207-Z	1
29	6020350990-4	Retainer NBR 35x72x10 (Comer 8.7.1.02545)	1
		Replacement Set (Shaft / Crown / Pinion)	
30	5528011159-6	Brushcutter Transmission Cx Replacement System (Comer)	-

• Chain Protections

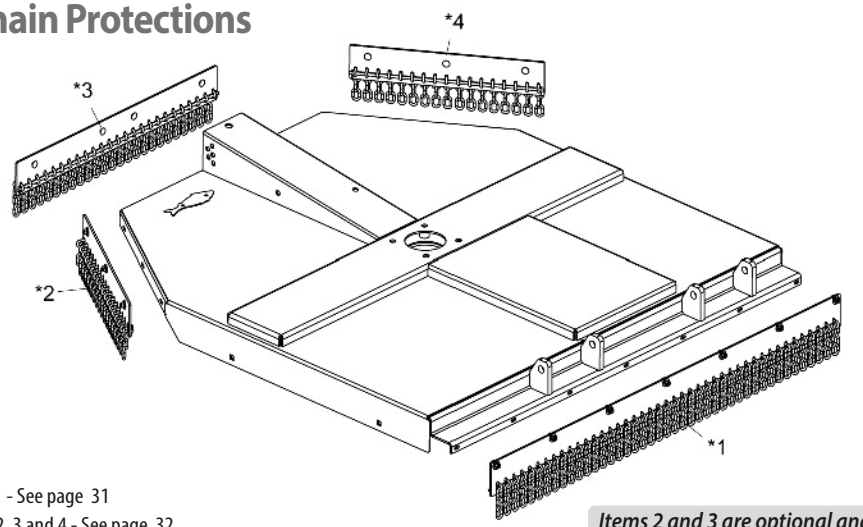

* Item 1 - See page 31
* Itens 2, 3 and 4 - See page 32

Items 2 and 3 are optional and replace the Rear Plate Protection.

Item	Code	Product description	RD/RDU 1300	RD/RDU 1500	RD/RDU 1700
*1	5464010636-3	Complete Front Chain Protection 1300	1		
*1	5464010635-5	Complete Front Chain Protection 1500		1	
*1	5464010616-9	Complete Front Chain Protection 1700			1
*1	5464010779-3	Complete Front Chain Protection 1745			
*2	5464010637-1	Complete Right Rear Protection 1300	1		
*2	5464010634-7	Complete Right Rear Protection 1500		1	
*2	5464010615-0	Complete Right Rear Protection 1700			1
*3	5464010637-1	Complete Right Rear Protection 1300	1		
*3	5464010634-7	Complete Right Rear Protection 1500		1	
*3	5464010614-2	Complete Central Rear Protection 1700			1
*4	5464010637-1	Complete Right Rear Protection 1300	1		
*4	5464010634-7	Complete Right Rear Protection 1500		1	
*4	5464010615-0	Complete Right Rear Protection 1700			1
*4	5464010780-7	Complete Side Rear Protection 600mm			

• Complete Front Protection

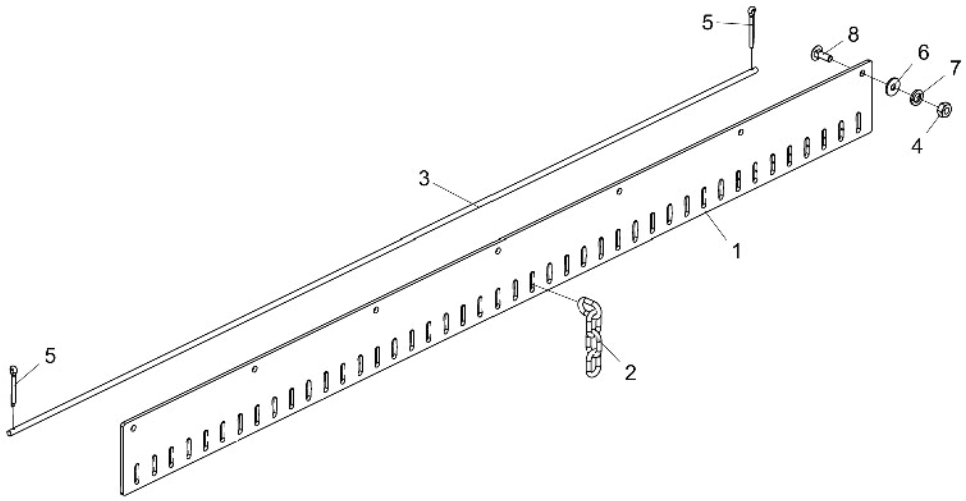

Item	Code	Product description	All	RD/RDU 1300	RD/RDU 1500	RD/RDU 1700
1	5136018761-0	Rear Suport Plate 1380mm		1		
1	5136018747-4	Front Suport Plate 1550mm			1	
1	5136018670-2	Front Suport Plate 1745mm				1
1	5136023258-5	Front Suport Plate 1745mm				
2	6020058091-8	Protection Chain (4 Links)		34	38	43
3	5040010986-6	Round Bar Ø3/8" X 1375mm		1		
3	5040010984-0	Round Bar Ø3/8" X 1540mm			1	
3	5040010965-3	Round Bar Ø3/8" X 1740mm				1
4	6020310822-5	Hexagonal Nut M10 X 1,50 Ma Cl8 Ch.17mm H.8,00mm		6	6	7
5	6020050101-5	Cotterpin 1/8" X 1"	2			
6	6020010443-1	Smooth Washer M10 Ø10,50XØ30,00X2,50mm(DIN 9021)		6	6	7
7	6020010394-0	Pressure Washer M10 Media		6	6	7
8	6020317544-5	French Head Bolt M10 X 1,50 X 30mm Cl8.8 Rt		6	6	7

• Complete Right/Left Rear Protection

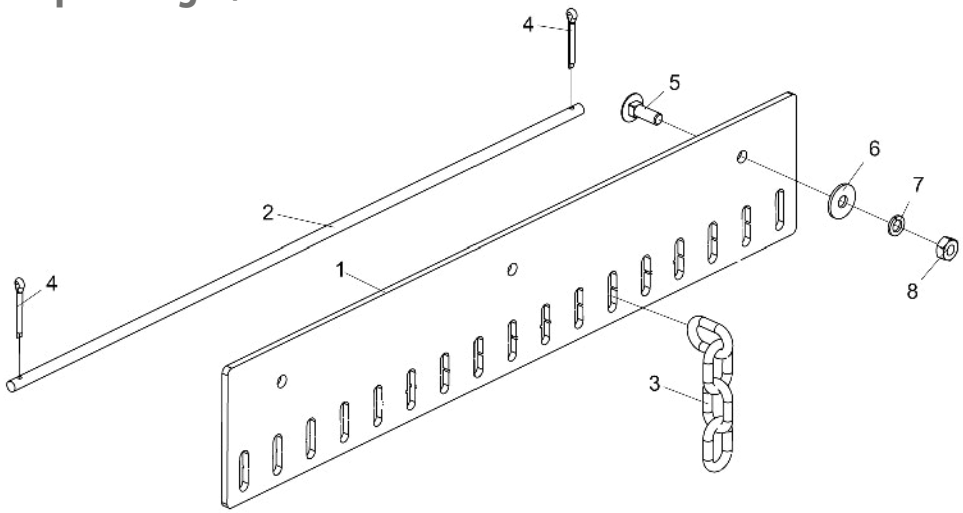

Item	Code	Product description	All	RD/RDU 1300	RD/RDU 1500	RD/RDU 1700
1	5136018760-1	Rear Support Plate 485mm		1		
1	5136018748-2	Rear Support Plate 600mm			1	
1	5136018668-0	Lateral Rear Protection PLate 680mm				1
1	5136023259-3	Lateral Rear Protection PLate 660mm				
2	5040010985-8	Round Bar Ø3/8" X 480mm		1		
2	5040010983-1	Round Bar Ø3/8" X 600mm			1	
2	5040010966-1	Round Bar Ø3/8" X 680mm				1
2	5040011145-3	Round Bar Ø3/8" X 660mm				
3	6020058091-8	Protection Chain (4 Links)		12	15	17
4	6020050101-5	Cotterpin 1/8" X 1"	2			
5	6020317544-5	French Head Bolt M10 X 1,50 X 30Mm Cl8.8 Rt		2	3	3
6	6020010443-1	Smooth Washer M10 Ø10,50XØ30,00X2,50mm(DIN 9021)		2	3	3
7	6020010394-0	Pressure Washer M10 Media		2	3	3
8	6020310822-5	Hexagonal Nut M10 X 1,50 Ma Cl8 Ch.17Mm H.8,00Mm		2	3	3

• Complete Central Rear Protection

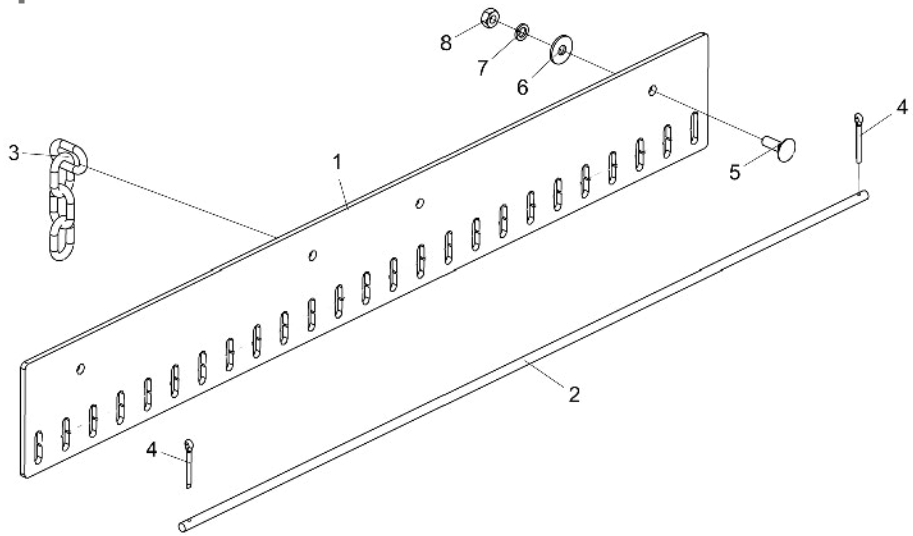

Item	Code	Product description	All	RD 1300	RD 1500	RD 1700
1	5136018760-1	Rear Support Plate 485mm		1		
1	5136018748-2	Rear Support Plate 600mm			1	
1	5136018669-9	Central Rear Protection Plate 1000mm				1
2	5040010985-8	Round Bar Ø3/8" X 480mm		1		
2	5040010983-1	Round Bar Ø3/8" X 600mm			1	
2	5040010967-0	Round Bar 3/8" X 1000mm				1
3	6020058091-8	Protection Chain (4 Links)		12	15	25
4	6020050101-5	Cotterpin 1/8" X 1"	2			
5	6020317544-5	French Head Bolt M10 X 1,50 X 30Mm Cl8.8 Rt		2	3	4
6	6020010443-1	Smooth Washer M10 Ø10,50XØ30,00X2,50mm(DIN 9021)		2	3	4
7	6020010394-0	Pressure Washer M10 Media		2	3	4
8	6020310822-5	Hexagonal Nut M10 X 1,50 Ma Cl8 Ch.17Mm H.8,00Mm		2	3	4

• Limiter Height Hitch

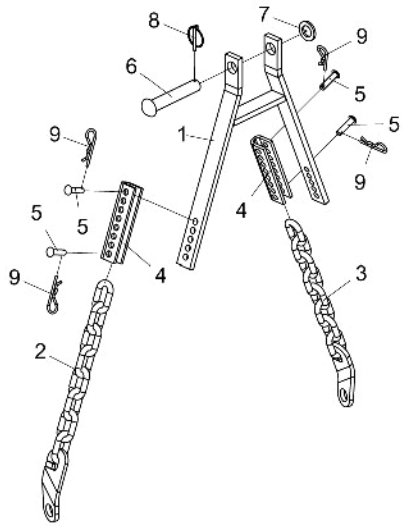

Item	Code	Product description	All
1	5252010009-1	Limiter Height Hitch	1
2	5192040003-9	Left Chain Of Drawbar W/08 Elos	1
3	5192040002-0	Right Chain Of Drawbar W/08 Elos	1
4	5530080033-4	Support "U" Of Hitch	2
5	6020311237-0	French Head Pin Ø11,2 X 42Mm	4
6	6020310866-7	French Head Pin 1”x 140mm	1
7	5024010039-5	Smooth Washer Ø26,2 X Ø44 X 4,75Mm	1
8	6020390301-7	Lock Ø5,75 X 50Mm	1
9	6020390308-4	Lock Nma - Type "R" Ø4,5 X 80Mm	4

• Depth Wheel W/Bearing

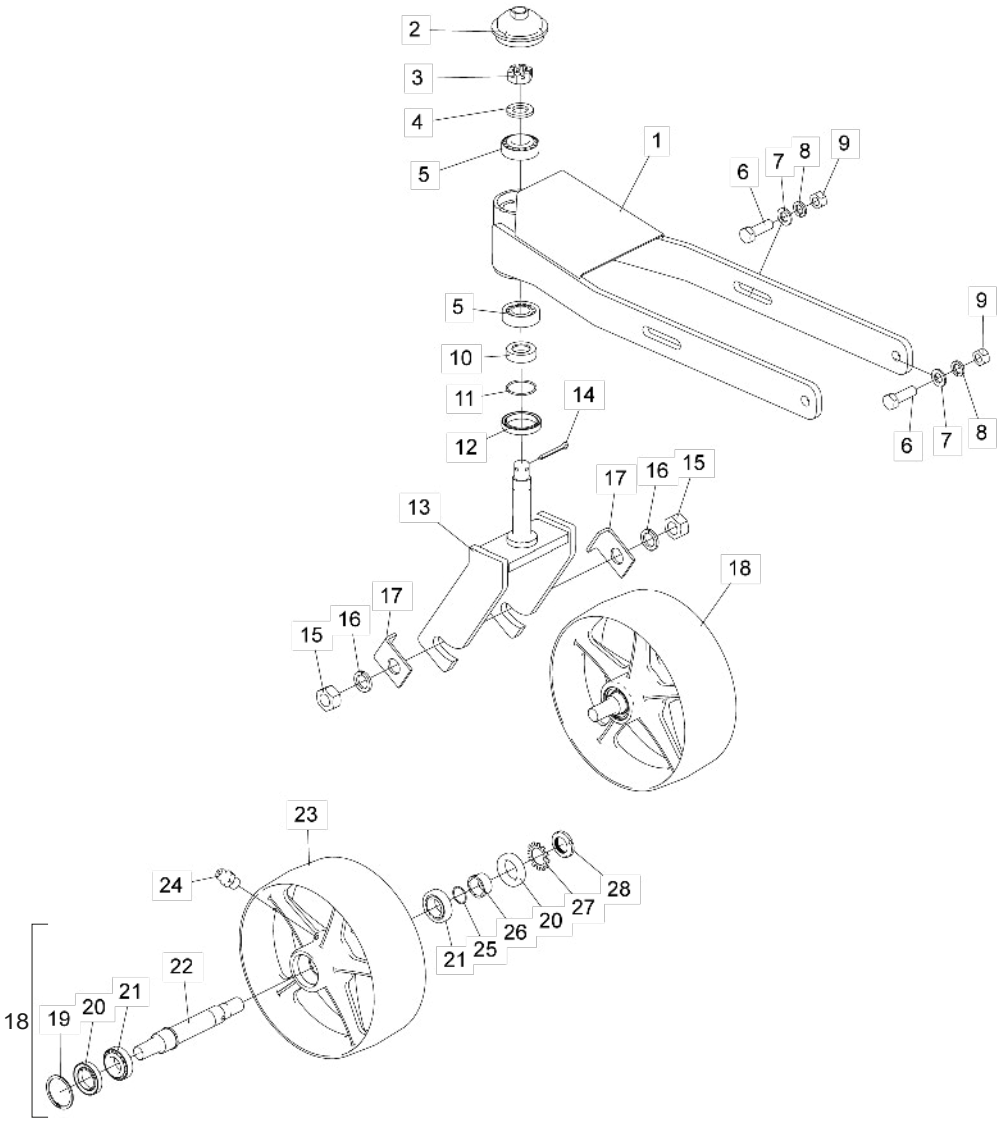

Item	Code	Product description	All
1	5530018140-5	Height Control Support (Wheel / Bearing)	1
2	5096010053-8	Wheel Hub Cap	1
3	6020310791-1	Nut M24 X 2,00 Mb Cl8 Ch.36mm H.19,00mm Without Crown	1
4	5024010039-5	Smooth Washer Ø26,2 X Ø44 X 4,75mm	1
5	6020350062-1	Bearing 32206	2
6	6020311210-9	Hexagonal Head Bolt M16 X 2,00 X 50mm Cl8.8 Rt	4
7	6020015985-6	Smooth Washer M16 (Ø17 x Ø30 x 3mm) Standart DIN 125	4
8	6020010124-6	Pressure Washer M16 Media	4
9	6020310818-7	Hexagonal Nut M12 X 1,75 Ma Cl8 Ch.19mm H.10,00mm	4
10	5080012088-5	Support Bushing	1
11	6020016020-0	O'Ring Ø 29,87 X 1,78 - 2025 N 0674-70	1
12	6020350248-9	Retainer Ø50,00 X Ø65,00 X 10,00mm	1
13	5530018141-3	Wheel Support	1
14	6020050116-3	Cotterpin 1/4" X 2"	1
15	6020310457-2	Hexagonal Nut M24 X 3,00 Ma Cl8 Ch.36mm H.19,00mm	2
16	6020010196-3	Pressure Washer M24 Media (	2
17	5136060170-0	Plate Of Wheel Lock	2
18	5498010340-7	Wheel With Mounted Bearing	1
19	6020016019-6	Elastic Ring Din 472 - 56 X 2	1
20	6020351013-9	Retainer Ø35.00 X Ø56,00 X 10.00mm (7452 Br)	2
21	6020350868-1	Bearing 32006Xj (Nsk)	2
22	5232012451-4	Wheel Shaft	1
23	5498010341-5	Machined Wheel (Bearing)	1
24	6020130100-1	Grease Fitting 1/4"	1
25	6020016018-8	O'Ring Ø 26,7 X 1,78 - 2023 N 0674-70	1
26	5080012086-9	Support Bushing	1
27	6020016011-0	Lock Washer Mb6 Ø30mm	1
28	6020311296-6	Nut Km6 M30 X 1,5mm	1

• Cardan - STU

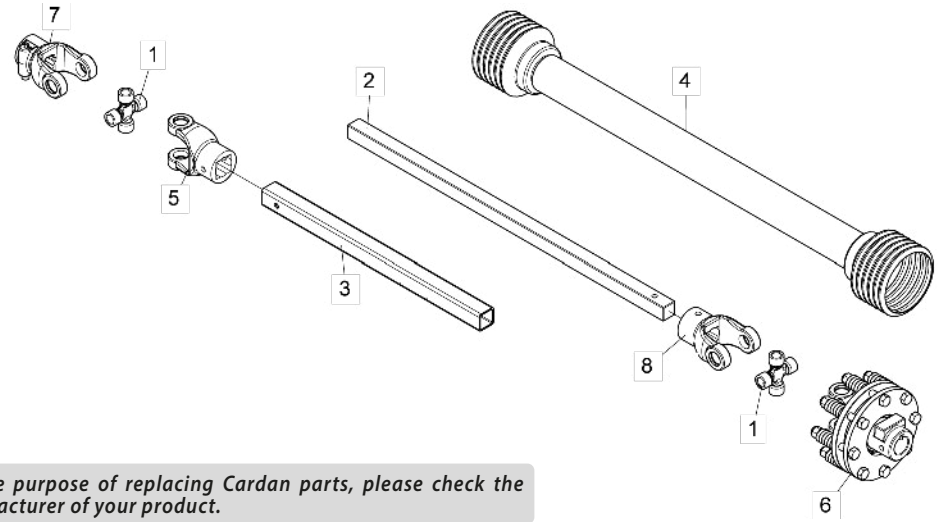

Item	Código	Descrição do produto	Todos
1	6020060155-9	Commercial Cross St-103 (Cram)	2
2	6020031076-7	Square Bar 29.85mm (Stu-29)	1
3	6020395460-6	Square Tube 39.80 X 30.30 X 4.57mm (Stu-28J)	1
4	6020060153-2	Protection Cover (2500/Yellow)	1
5	6020370450-2	Support Quad.40mm Ftrv 10mm C/Cp Stu-251-(Cram-K40)	1
6	6020060154-0	Clutch Set D.1.3/8" 6 Splines Ap Lat C/Int Estu-250-00 (Cram-5017)	1
7	6020370449-9	Support D.1.3/8" 6 Splines W/Quick Coupling Stu-250-(Cram-353Tr)	1
8	6020370451-0	Support Quad.30mm Ftrv 10mm C/Cp Stu-252-(Cram-K30A)	1

For the purpose of replacing Cardan parts, please check the manufacturer of your product.

• Cardan - AEMCO

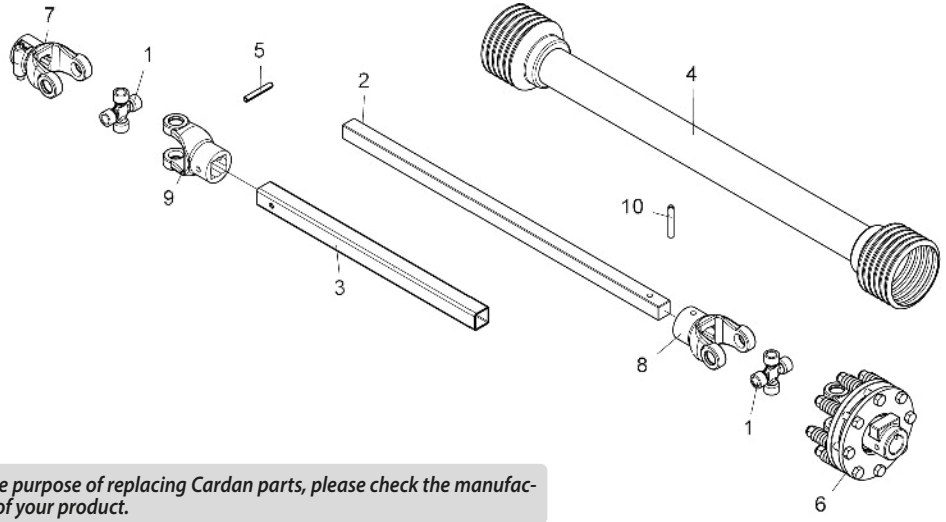

Item	Código	Descrição do produto	Todos
1	6020050514-2	Crosshead 30.17 X 92mm Female Side Cc2572/12Pe (Cc103/1 Aemco)	2
2	6020030995-5	Square Bar (Aemco Cc29A)	1
3	6020395459-2	Female Square Tube(39.9X30.40X4500mm)Cc2572/12Pe (Aemco Cc28J)	1
4	6020060158-3	Pe2000/0900 Full Protection Cover	1
5	6020317942-4	Elastic Pin 10 X 70mm Cc2572/12Pe (Aemco 005.437-3)	1
5	6020317944-0	Elastic Pin Ø6 X 60mm Cc2572/12Pe (Aemco 031.719-4)	1
6	6020060156-7	Clutch Assembly (Torque 90Kgf.M) Cc2572/12Pe (Aemco Ea250-00)	1
7	6020390072-7	Quick Coupling Terminal 6 Splines 1.3/8" Female Side Cc2572/12Pe (Cc250 Aemco)	1
8	6020395461-4	Terminal F.Square 29.90mm C/F. Transverse 10.00mm Cc2572/12Pe (Cc252D Aemco)	1
9	6020390074-3	Terminal With Square Hole 39.85mm With Transverse Hole Ø10mm Female Side Cc2572/12Pe (Cc251 Aemco)	1
10	6020317941-6	Elastic Pin Ø10 X 60mm Cc2572/12Pe (Aemco 002.820-6)	1
10	6020317943-2	Elastic Pin Ø6 X 70mm Cc2572/12Pe (Aemco 067.754-4)	1

For the purpose of replacing Cardan parts, please check the manufacturer of your product.

• Old Stickers

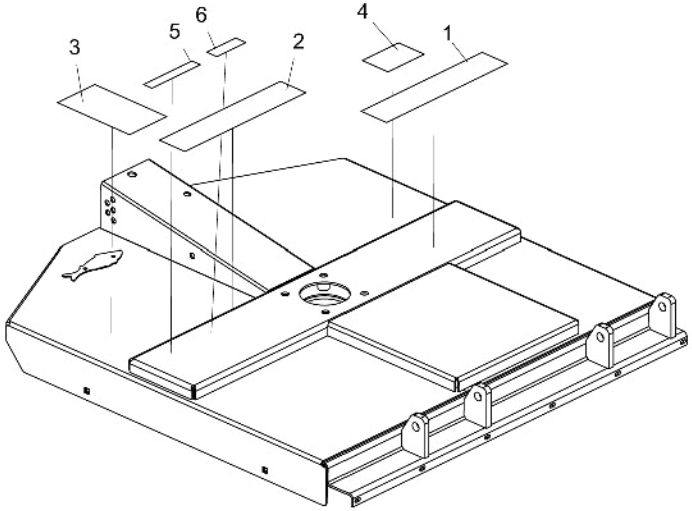

Item	Code	Product description	All	RD 1300	RD 1500	RD 1700	RDU 1300	RDU 1500	RDU 1700
1	6020071062-5	Sticker Rd-1300 (500 X 100Mm)		1					
1	6020071064-1	Sticker Rd-1500 (500 X 100Mm)			1				
1	6020071065-0	Sticker Rd-1700 (500 X 100Mm)				1			
1	6020071067-6	Sticker Rdu-1300 (500 X 100Mm)					1		
1	6020071069-2	Sticker Rdu-1500 (500 X 100Mm)						1	
1	6020071071-4	Sticker Rdu-1700 (500 X 100Mm)							1
2	6020071029-3	Sticker Baldan (500 X 100Mm)	1						
3	5206010102-7	Sticker Rotary Cutter Warning	1						
4	5206010294-5	Sticker Remove The Plug Before Place Rotary Cutter	1						
5	5206010026-8	Sticker Level Of Oil Check (Rotary Cutter)	1						
6	6020070894-9	Sticker Attention "Rotating Cardan" (45 X 130Mm)	1						

Item 1

Item 2

Item 3

Item 4

Item 5

Item 6

Note: Use these stickers for machines produced until May 2023.

• New Stickers

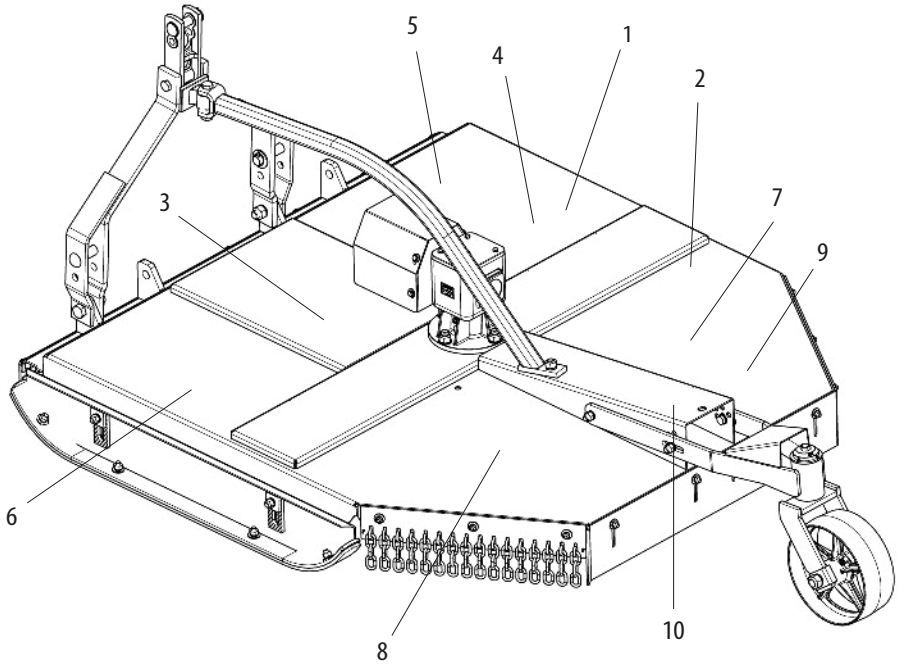

Item	Code	Product description	All	RD 1300	RD 1500	RD 1700	RDU 1300	RDU 1500	RDU 1700
1	5206010026-8	Sticker Level Of Oil Check (Rotary Cutter)	1						
2	5206010102-7	Sticker Rotary Cutter Warning	1						
3	5206010294-5	Sticker Remove The Plug Before Place Rotary Cutter	1						
4	6020070894-9	Sticker Attention "Rotating Cardan" (45 X 130mm)	1						
5	6020079615-5	Right Baldan Decal (180 X 510mm)	1						
6	6020079616-3	Stickers Baldan Left (180 X 510mm)	1						
7	6020079617-1	Stickers Rd-1700 Right (215 X 615mm)		1					
7	6020079619-8	Stickers RD-1500 Right - 245x695mm			1				
7	6020079621-0	Stickers Rd-1700 Right (285 X 795mm)				1			
7	6020079623-6	Stickers RDU-1300 Right - 215x615mm					1		
7	6020079625-2	Stickers RDU-1500 Right - 245x695mm.						1	
7	6020079627-9	Stickers RDU-1700 Right - 285x795mm							1
8	6020079618-0	Stickers RD-1300 Left - 215x615mm		1					
8	6020079620-1	Stickers RD-1500 Left - 245x695mm			1				
8	6020079622-8	Stickers Rd-1700 Left (285 X 795mm)				1			
8	6020079624-4	Stickers RDU-1300 Left - 215x615mm					1		
8	6020079626-0	Stickers RDU-1500 Left - 245x695mm						1	
8	6020079628-7	Stickers RDU-1700 Left - 285x795mm							1
9	6020090320-2	Aluminium Label (90 X 60 X 0,50mm)	1						
10	6020095955-0	Emblem 70 X 132,6mm	1						

Note: Use these stickers for machines produced from May 2023 onwards.

Item 10

Item 7

Item 8

Item 1

Item 3

Item 7

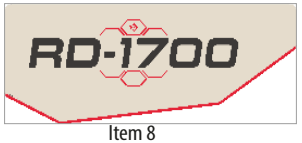

Item 8

Item 5

Item 6

Item 4

BALDAN

Avenida Baldan, 1500
Nova Matão
15.993-900
Matão/SP - Brasil
sac@baldan.com.br
export@baldan.com.br

+55 16 3221 6500
baldan.com.br