Parts Catalog

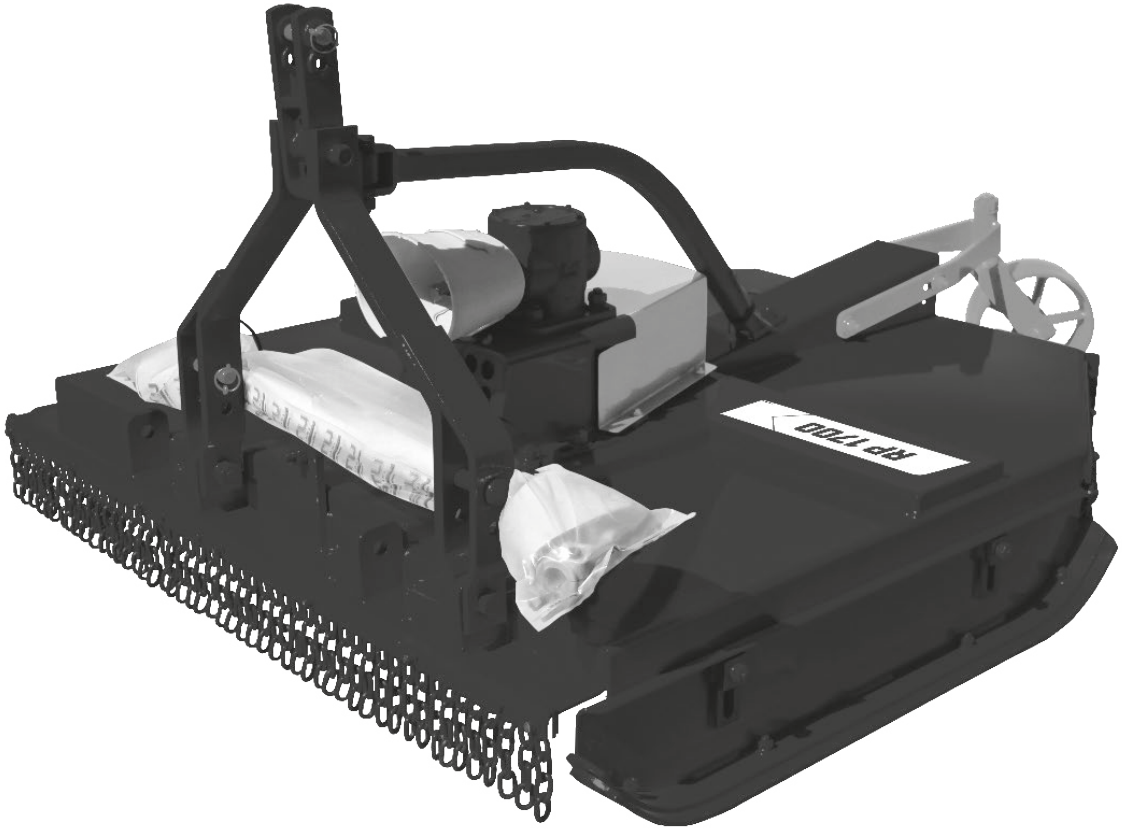

RP/RPU 1300/1500/1700

Central and Lateral Mounted Rotary Cutter

BALDAN

Index

RP 1300 W/Blades Support Bar 4
Table RP 1300 W/Blades Support Bar 5
RP 1300 W/Rotating Tray 6
Table RP 1300 W/Rotating Tray 7
RPU 1300 W/Blades Support Bar 8
Table RPU 1300 W/Blades Support Bar 9
RPU 1300 W/Rotating Tray 10
Table RPU 1300 W/Rotating Tray 11
RP 1500 W/Blades Support Bar 12
Table RP 1500 W/Blades Support Bar 13
RP 1500 W/Rotating Tray 14
Table RP 1500 W/Rotating Tray 15
RPU 1500 W/Blades Support Bar 16
Table RPU 1500 W/Blades Support Bar 17
RPU 1500 W/Rotating Tray 18
Table RPU 1500 W/Rotating Tray 19
RP 1700 W/Blades Support Bar 20
Table RP 1700 W/Blades Support Bar 21
RP 1700 W/Rotating Tray 22
Table RP 1700 W/Rotating Tray 23
RPU 1700 W/Blades Support Bar 24
Table RPU 1700 W/Blades Support Bar 25
RPU 1700 W/Rotating Tray 26
Table RPU 1700 W/Rotating Tray 27
Cut Adjustment Ski 28
Transmission Box (BPN) 29
Transmission Box (Comer) 30
Complete Blade Hub 31
Complete Chains Protections 32
Complete Front Protection 32
Complete Rear Lateral Protection 33
Complete Rear Central Protection 33
Limiter Height Hitch 34
Depth Wheel W/Bearing 35
Stickers 36

• RP 1300 W/Blades Support Bar

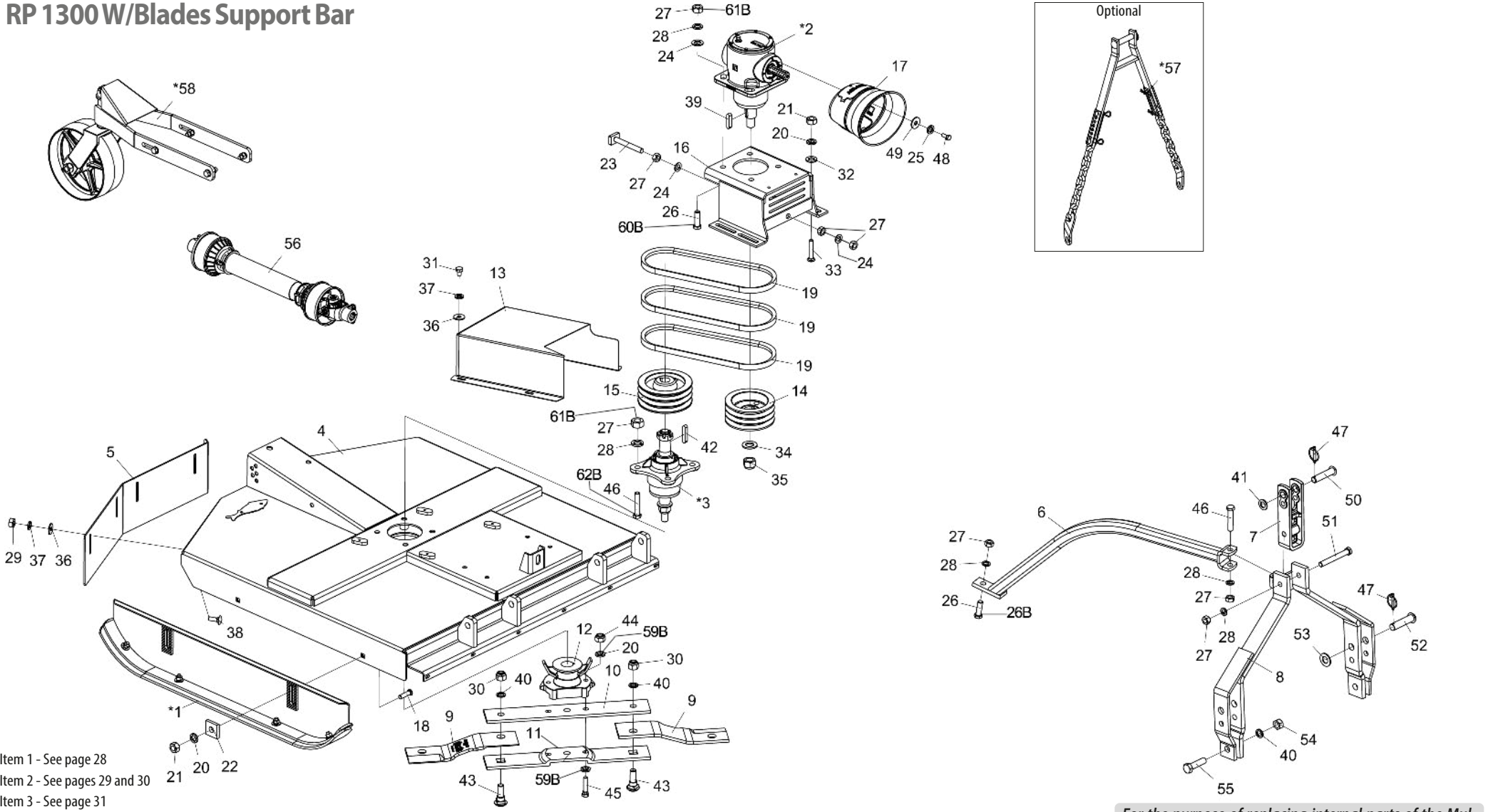

* Item 1 - See page 28
* Item 2 - See pages 29 and 30
* Item 3 - See page 31
* Item 57 - See page 34
* Item 58 - See page 35

Note: Items 20A,26A,27A,28A,44A,45A and 46A, use until 10/2023, and items 20B,26B,27B,28B,44B,45B,46B,59B,60B,61B and 62B use from 11/2023.

For the purpose of replacing internal parts of the Multiplier Transmission Box (2), check the manufacturer's name on the box*

• Table RP 1300 W/Blades Support Bar

Item	Code	Product description	All
*1	5522010062-5	Complete Height Adjustment Ski	2
*2	6020057992-8	Transmision Box (BPN)	1
*2	6020059220-7	Transmission Box (COMER)	1
*3	5204010545-0	Complete Small Blade Hub	1
4	5092010603-7	Blade Protetion Box	1
5	5464010381-0	Rear Protection 1020Mm	1
6	5530012174-7	Support Of Drawbar	1
7	6010602571-4	Hitch Shackle 290Mm(Categoria 1 and 2)	1
8	5084010146-8	Hitch Drawbar	1
9	4625264811-9	Blade 451 X 100 X 12Mm Double Edge	2
10	5040140011-4	Upper Blades Support Bar	1
11	5040140012-2	Lower Blades Support Bar	1
12	5368010141-4	Fixation Bearing Of Blades With Scraper	1
13	5464010613-4	Pulley Protection	1
14	5448010035-5	Pulley 3 Canals	1
15	5448010001-0	Pulley 3 Canals Hub	1
16	5530017720-3	Transmission Box Fixation Support	1
17	6020310601-0	Protection Kit	1
18	6020310938-8	French Head Bolt M16 x 2,00 x 60mm CL8.8 RP	4
19	6020050254-2	Belt C-51	3
20A	6020010124-6	Pressure Washer M16 Media	10
20B	6020010124-6	Pressure Washer M16 Media	8
21	6020310818-7	Hexagonal Nut M16 X 2,00 Ma Cl8 Ch.24Mm H.13,00Mm	8
22	6010601016-4	Small Plate	4
23	5268010868-4	Belt Stretcher	1
24	6020015986-4	Smooth Washer M20 (Ø21 x Ø37 x 3mm) Standart DIN 125	6
25	6020010004-5	Pressure Washer M8 Media	4
26A	6020310188-3	Hexagonal Head Bolt M20 X 2,50 X 65Mm Cl8.8 Rp	5
26B	6020310188-3	Hexagonal Head Bolt M20 X 2,50 X 65Mm Cl8.8 Rp	1
27A	6020311265-6	Hexagonal Nut M20 X 2,50 Ma Cl8 Ch.30Mm H.16,00Mm	13
27B	6020311265-6	Hexagonal Nut M20 X 2,50 Ma Cl8 Ch.30Mm H.16,00Mm	5
28	6020010403-2	Pressure Washer M20 Media	11
28B	6020010403-2	Pressure Washer M20 Media	3
29	6020310822-5	Hexagonal Nut M10 X 1,50 Ma Cl8 Ch.17Mm H.8,00Mm	4
30	6020310338-0	Self-Locking Nut With Nylon M24 X 3,00 Ma Cl8 Ch.36Mm H.15,00Mm(White Galnanised)	2

Item	Code	Product description	All
31	6020310299-5	Hexagonal Head Bolt M10 X 1,50 X 15Mm Cl8.8 Rt	4
32	6020015985-6	Smooth Washer M16 (Ø17 x Ø30 x 3mm) Standart DIN 125	4
33	6020310574-9	French Head Bolt M16 X 2,00 X 90Mm Cl8.8 Rp	4
34	6020010453-9	Smooth Washer M33 Ø34,00 X Ø60,00 X 5,00mm (Din 125A)	1
35	6020310795-4	Self-Locking Nut With Nylon 1.1/4" 12F Unf Gr5 Ch.1.7/8" H.33,00Mm	1
36	6020010443-1	Smooth Washer M10 Ø10,50XØ30,00X2,50mm(DIN 9021)	8
37	6020010394-0	Pressure Washer M10 Media	8
38	6020317544-5	French Head Bolt M10 X 1,50 X 30Mm Cl8.8 Rt	4
39	6020058892-7	Cotter Sq.3/8" x 44mm	2
40	6020010196-3	Pressure Washer M24 Media (	4
41	5024010039-5	Smooth Washer Ø26,2 X Ø44 X 4,75Mm	1
42	6020058893-5	Cotter Sq.3/8" x 52mm	1
43	6020310934-5	French Head Bolt M24 x 3,00 x 80mm CL8.8 Special	2
44A	6020317443-0	Self-Locking Nut With Nylon M16 X 2,00 Ma Cl8 Ch.24Mm H.16,00Mm	2
44B	6020317434-1	Hex Nut M16X1.50 MB CL8 CH.24mm H.13mm	2
45A	6020310933-7	Hexagonal Head Bolt M16 x 2,00 x 75mm CL8.8 RP Special	2
45B	6020317861-4	Hex Head Screw M16 X 1.50 X 80mm CL8.8 RP	2
46A	6020317430-9	Hexagonal Head Bolt M20 X 2,50 X 100Mm Cl8.8 Rp	5
46B	6020317430-9	Hexagonal Head Bolt M20 X 2,50 X 100Mm Cl8.8 Rp	1
47	6020390293-2	Lock Ø5,75 X 40Mm	3
48	6020311269-9	Hexagonal Head Bolt M8 X 1,25 X 20Mm Cl8.8 Rt	4
49	6020010448-2	Smooth Washer M8 Ø8,40XØ24,00X2,00mm(DIN 9021)	4
50	6020310595-1	French Head Pin Ø1" X 105mm	1
51	6020312506-5	Hexagonal Head Bolt M20 X 2,50 X 160Mm Cl8.8 Rp	1
52	6020310660-5	Pin Ø28 x 105mm	2
53	6020010450-4	Smooth Washer M33 Ø31,00 x Ø56,00 x 4,00mm (DIN 125A)	2
54	6020310457-2	Hexagonal Nut M24 X 3,00 Ma Cl8 Ch.36Mm H.19,00Mm	2
55	6020310935-3	Hexagonal Head Bolt M24 X 3,00 X 90mm CL8.8 RP	2
56	6020050789-7	Cardan Cra 353Tr X 353Pi X 500Tb With Cp (Stu)	1
*57	5252010120-9	Limiter Height Hitch	1
*58	5530018139-1	Depth Wheel W/Bearing	1
59B	6020016250-4	Wedge Lock Washer M16 DIN25201	4
60B	6020317623-9	Hexagon Head Screw M20 X 1.50 X 65mm CL8.8 RP	4
61B	6020310848-9	Hex Nut. Low Self-Locking Nylon M20 X 1.50 MB CL8 CH.30mm HLT 22mm	8
62B	6020317624-7	Head Screw Hexagon M20 X 1.50 X 100mm CL8.8 RP	4

• RP 1300 W/Rotating Tray

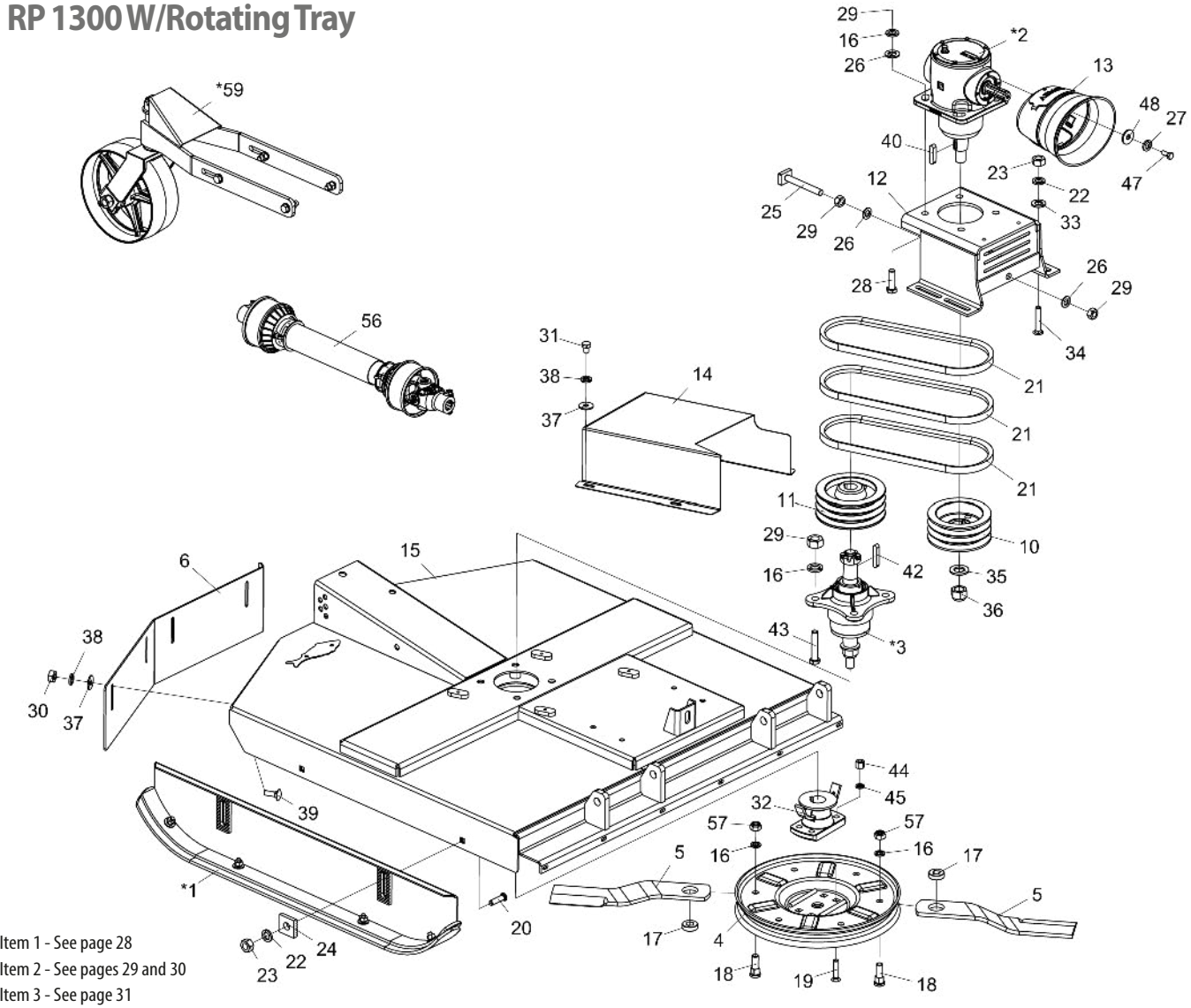

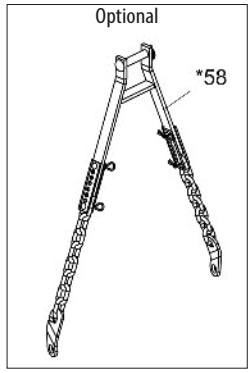

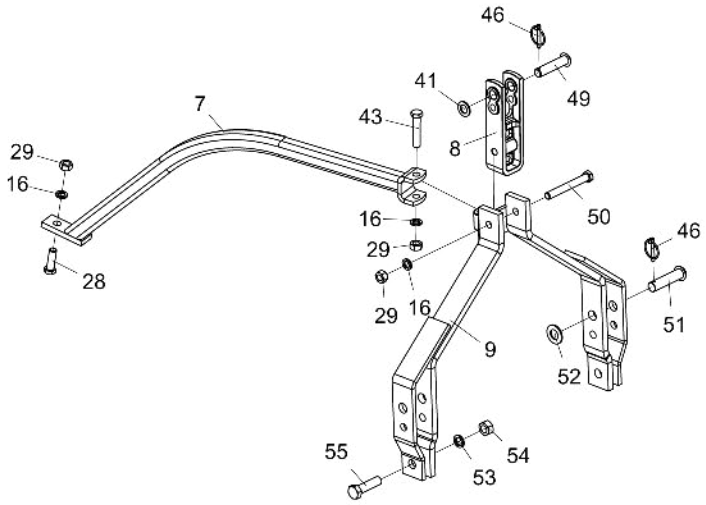

For the purpose of replacing internal parts of the Multiplier Transmission Box (2), check the manufacturer's name on the box*

* Item 1 - See page 28
* Item 2 - See pages 29 and 30
* Item 3 - See page 31
* Item 58 - See page 34
* Item 59 - See page 35

• Table RP 1300 W/Rotating Tray

Item	Code	Product description	All
*1	5522010062-5	Complete Height Adjustment Ski	2
*2	6020057992-8	Transmision Box (BPN)	1
*2	6020059220-7	Transmission Box (COMER)	1
*3	5204010545-0	Complete Small Blade Hub	1
4	5038020001-2	Rotating Tray	1
5	4625265212-4	Blade 505 x 3.1/2" x 1/2" (Cut Simple)	2
6	5464010381-0	Rear Protection 1020Mm	1
7	5530012174-7	Support Of Drawbar	1
8	6010602571-4	Hitch Shackle 290Mm(Categoria 1 E 2)	1
9	5084010146-8	Hitch Drawbar	1
10	5448010035-5	Pulley 3 Canals	1
11	5448010001-0	Pulley 3 Canals Hub	1
12	5530017720-3	Transmission Box Fixation Support	1
13	6020310601-0	Protection Kit	1
14	5464010613-4	Pulley Protection	1
15	5092010603-7	Blade Protetion Box	1
16	6020010403-2	Pressure Washer M20 Media	13
17	5024070001-5	Smooth Washer Sq.20 X Ø49 X 15,00Mm	2
18	6020310946-9	Round Head Bolt M20 x 2,5 X 65mm CL8.8 RT	2
19	6020310227-8	Screw Type A3 5/8" X 2.3/4" 18F Unf1A Gr2 Rp	4
20	6020310938-8	French Head Bolt M16 x 2,00 x 60mm CL8.8 RP	4
21	6020050254-2	Belt C-51	3
22	6020010124-6	Pressure Washer M16 Media	8
23	6020310818-7	Hexagonal Nut M16 X 2,00 Ma Cl8 Ch.24Mm H.13,00Mm	8
24	6010601016-4	Small Plate	4
25	5268010868-4	Belt Stretcher	1
26	6020015986-4	Smooth Washer M20 (Ø21 x Ø37 x 3mm) Standart DIN 125	6
27	6020010004-5	Pressure Washer M8 Media	4
28	6020310188-3	Hexagonal Head Bolt M20 X 2,50 X 65Mm Cl8.8 Rp	5
29	6020311265-6	Hexagonal Nut M20 X 2,50 Ma Cl8 Ch.30Mm H.16,00Mm	13
30	6020310822-5	Hexagonal Nut M10 X 1,50 Ma Cl8 Ch.17Mm H.8,00Mm	4
31	6020310299-5	Hexagonal Head Bolt M10 X 1,50 X 15Mm Cl8.8 Rt	4
32	5368010891-5	Tray Fixation Bearing W/Scrapper	1
33	6020015985-6	Smooth Washer M16 (Ø17 x Ø30 x 3mm) Standart DIN 125	4
34	6020310574-9	French Head Bolt M16 X 2,00 X 90Mm Cl8.8 Rp	4
35	6020010453-9	Smooth Washer M33 Ø34,00 X Ø60,00 X 5,00mm (Din 125A)	1

Item	Code	Product description	All
36	6020310795-4	Self-Locking Nut With Nylon 1.1/4" 12F Unf Gr5 Ch.1.7/8" H.33,00Mm	1
37	6020010443-1	Smooth Washer M10 Ø10,50XØ30,00X2,50mm(DIN 9021)	8
38	6020010394-0	Pressure Washer M10 Media	8
39	6020317544-5	French Head Bolt M10 X 1,50 X 30Mm Cl8.8 Rt	4
40	6020058892-7	Cotter Sq.3/8" x 44mm	2
41	5024010039-5	Smooth Washer Ø26,2 X Ø44 X 4,75Mm	1
42	6020058893-5	Cotter Sq.3/8" x 52mm	1
43	6020317430-9	Hexagonal Head Bolt M20 X 2,50 X 100Mm Cl8.8 Rp	5
44	6020310808-0	Double Hexagonal Nut 5/8" 18F Unf Gr5 Ch.15/16" H.21,50Mm	4
45	6020010412-1	Pressure Washer 5/8" Media Industry	4
46	6020390293-2	Lock Ø5,75 X 40Mm	3
47	6020311269-9	Hexagonal Head Bolt M8 X 1,25 X 20Mm Cl8.8 Rt	4
48	6020010448-2	Smooth Washer M8 Ø8,40XØ24,00X2,00mm(DIN 9021)	4
49	6020310595-1	French Head Pin Ø1" X 105mm	1
50	6020312506-5	Hexagonal Head Bolt M20 X 2,50 X 160Mm Cl8.8 Rp	1
51	6020310660-5	Pin Ø28 x 105mm	2
52	6020010450-4	Smooth Washer M33 Ø31,00 x Ø56,00 x 4,00mm (DIN 125A)	2
53	6020010196-3	Pressure Washer M24 Media (	2
54	6020310457-2	Hexagonal Nut M24 X 3,00 Ma Cl8 Ch.36Mm H.19,00Mm	2
55	6020310935-3	Hexagonal Head Bolt M24 X 3,00 X 90mm CL8.8 RP	2
56	6020050789-7	Cardan Cra 353Tr X 353Pi X 500Tb With Cp (Stu)	1
57	6020310837-3	Self-Locking Nut With Nylon M20 X 2,50 Ma Cl8 Ch.30Mm H.18,70Mm	2
*58	5252010120-9	Limiter Height Hitch	1
*59	5530018139-1	Depth Wheel W/Bearing	1

BALDAN

• RPU 1300 W/Blades Support Bar

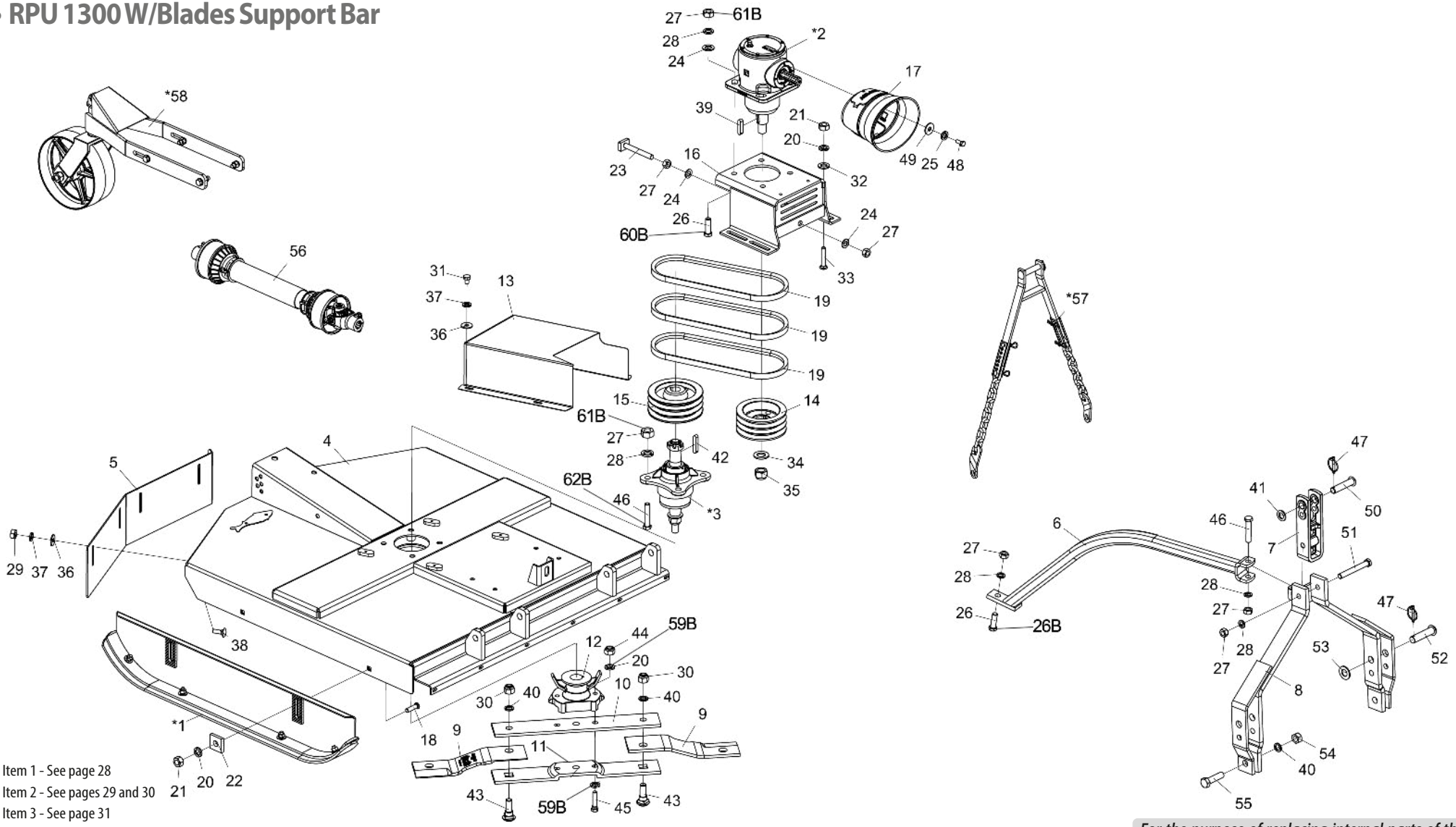

* Item 1 - See page 28
* Item 2 - See pages 29 and 30
* Item 3 - See page 31
* Item 57 - See page 34
* Item 58 - See page 35

Note: Items 20A,26A,27A,28A,44A and 46A, use until 10/2023, and items 20B,26B,27B,28B,44B,46B,59B,60B,61B and 62B use from 11/2023.

For the purpose of replacing internal parts of the Multiplier Transmission Box (2), check the manufacturer's name on the box*

• Table RPU 1300 W/Blades Support Bar

Item	Code	Product description	All
*1	5522010062-5	Complete Height Adjustment Ski	2
*2	6020057992-8	Transmision Box (BPN)	1
*2	6020059220-7	Transmission Box (COMER)	1
*3	5204010545-0	Complete Small Blade Hub	1
4	5092010603-7	Blade Protetion Box	1
5	5464010381-0	Rear Protection 1020Mm	1
6	5530012174-7	Support Of Drawbar	1
7	6010602571-4	Hitch Shackle 290Mm(Categoria 1 and 2)	1
8	5084010146-8	Hitch Drawbar	1
9	4625264811-9	Blade 451 X 100 X 12Mm Double Edge	2
10	5040140011-4	Upper Blades Support Bar	1
11	5040140012-2	Lower Blades Support Bar	1
12	5368010141-4	Fixation Bearing Of Blades With Scraper	1
13	5464010613-4	Pulley Protection	1
14	5448010035-5	Pulley 3 Canals	1
15	5448010001-0	Pulley 3 Canals Hub	1
16	5530017720-3	Transmission Box Fixation Support	1
17	6020310601-0	Protection Kit	1
18	6020310938-8	French Head Bolt M16 x 2,00 x 60mm CL8.8 RP	4
19	6020050254-2	Belt C-51	3
20A	6020010124-6	Pressure Washer M16 Media	10
20B	6020010124-6	Pressure Washer M16 Media	8
21	6020310818-7	Hexagonal Nut M16 X 2,00 Ma Cl8 Ch.24Mm H.13,00Mm	8
22	6010601016-4	Small Plate	4
23	5268010868-4	Belt Stretcher	1
24	6020015986-4	Smooth Washer M20 (Ø21 x Ø37 x 3mm) Standart DIN 125	6
25	6020010004-5	Pressure Washer M8 Media	4
26A	6020310188-3	Hexagonal Head Bolt M20 X 2,50 X 65Mm Cl8.8 Rp	5
26B	6020310188-3	Hexagonal Head Bolt M20 X 2,50 X 65Mm Cl8.8 Rp	1
27A	6020311265-6	Hexagonal Nut M20 X 2,50 Ma Cl8 Ch.30Mm H.16,00Mm	13
27B	6020311265-6	Hexagonal Nut M20 X 2,50 Ma Cl8 Ch.30Mm H.16,00Mm	5
28A	6020010403-2	Pressure Washer M20 Media	11
28B	6020010403-2	Pressure Washer M20 Media	3
29	6020310822-5	Hexagonal Nut M10 X 1,50 Ma Cl8 Ch.17Mm H.8,00Mm	4
30	6020310338-0	Self-Locking Nut With Nylon M24 X 3,00 Ma Cl8 Ch.36Mm H.15,00Mm(White Galnanised)	2

Item	Code	Product description	All
31	6020310299-5	Hexagonal Head Bolt M10 X 1,50 X 15Mm Cl8.8 Rt	4
32	6020015985-6	Smooth Washer M16 (Ø17 x Ø30 x 3mm) Standart DIN 125	4
33	6020310574-9	French Head Bolt M16 X 2,00 X 90Mm Cl8.8 Rp	4
34	6020010453-9	Smooth Washer M33 Ø34,00 X Ø60,00 X 5,00mm (Din 125A)	1
35	6020310795-4	Self-Locking Nut With Nylon 1.1/4" 12F Unf Gr5 Ch.1.7/8" H.33,00Mm	1
36	6020010443-1	Smooth Washer M10 Ø10,50XØ30,00X2,50mm(DIN 9021)	8
37	6020010394-0	Pressure Washer M10 Media	8
38	6020317544-5	French Head Bolt M10 X 1,50 X 30Mm Cl8.8 Rt	4
39	6020058892-7	Cotter Sq.3/8" x 44mm	2
40	6020010196-3	Pressure Washer M24 Media (	4
41	5024010039-5	Smooth Washer Ø26,2 X Ø44 X 4,75Mm	1
42	6020058893-5	Cotter Sq.3/8" x 52mm	1
43	6020310934-5	French Head Bolt M24 x 3,00 x 80mm CL8.8 Special	2
44A	6020317443-0	Self-Locking Nut With Nylon M16 X 2,00 Ma Cl8 Ch.24Mm H.16,00Mm	2
44B	6020317434-1	Hex Nut M16 X 1.50 MB CL8 CH.24mm HLT.13mm	2
45	6020310933-7	Hexagonal Head Bolt M16 x 2,00 x 75mm CL8.8 RP Special	2
46A	6020317430-9	Hexagonal Head Bolt M20 X 2,50 X 100Mm Cl8.8 Rp	5
46B	6020317430-9	Hexagonal Head Bolt M20 X 2,50 X 100Mm Cl8.8 Rp	1
47	6020390293-2	Lock Ø5,75 X 40Mm	3
48	6020311269-9	Hexagonal Head Bolt M8 X 1,25 X 20Mm Cl8.8 Rt	4
49	6020010448-2	Smooth Washer M8 Ø8,40XØ24,00X2,00mm(DIN 9021)	4
50	6020310595-1	French Head Pin Ø1" X 105mm	1
51	6020312506-5	Hexagonal Head Bolt M20 X 2,50 X 160Mm Cl8.8 Rp	1
52	6020310660-5	Pin Ø28 x 105mm	2
53	6020010450-4	Smooth Washer M33 Ø31,00 x Ø56,00 x 4,00mm (DIN 125A)	2
54	6020310457-2	Hexagonal Nut M24 X 3,00 Ma Cl8 Ch.36Mm H.19,00Mm	2
55	6020310935-3	Hexagonal Head Bolt M24 X 3,00 X 90mm CL8.8 RP	2
56	6020050789-7	Cardan Cra 353Tr X 353Pi X 500Tb With Cp (Stu)	1
*57	5252010120-9	Limiter Height Hitch	1
*58	5530018139-1	Depth Wheel W/Bearing	1
59B	6020016250-4	Wedge Lock Washer M16 DIN 25201	4
60B	6020317623-9	Head Screw Hexagon M20 X 1.50 X 65mm CL8.8 RP	4
61B	6020310848-9	Self-locking hexagonal nut. w/low nylon M20 X 1.50 MB CL8 CH.30mm H.22mm	8
62B	6020317624-7	Head screw. Hexagon M20 X 1.50 X 100mm CL8.8	4

• RPU 1300 W/Rotating Tray

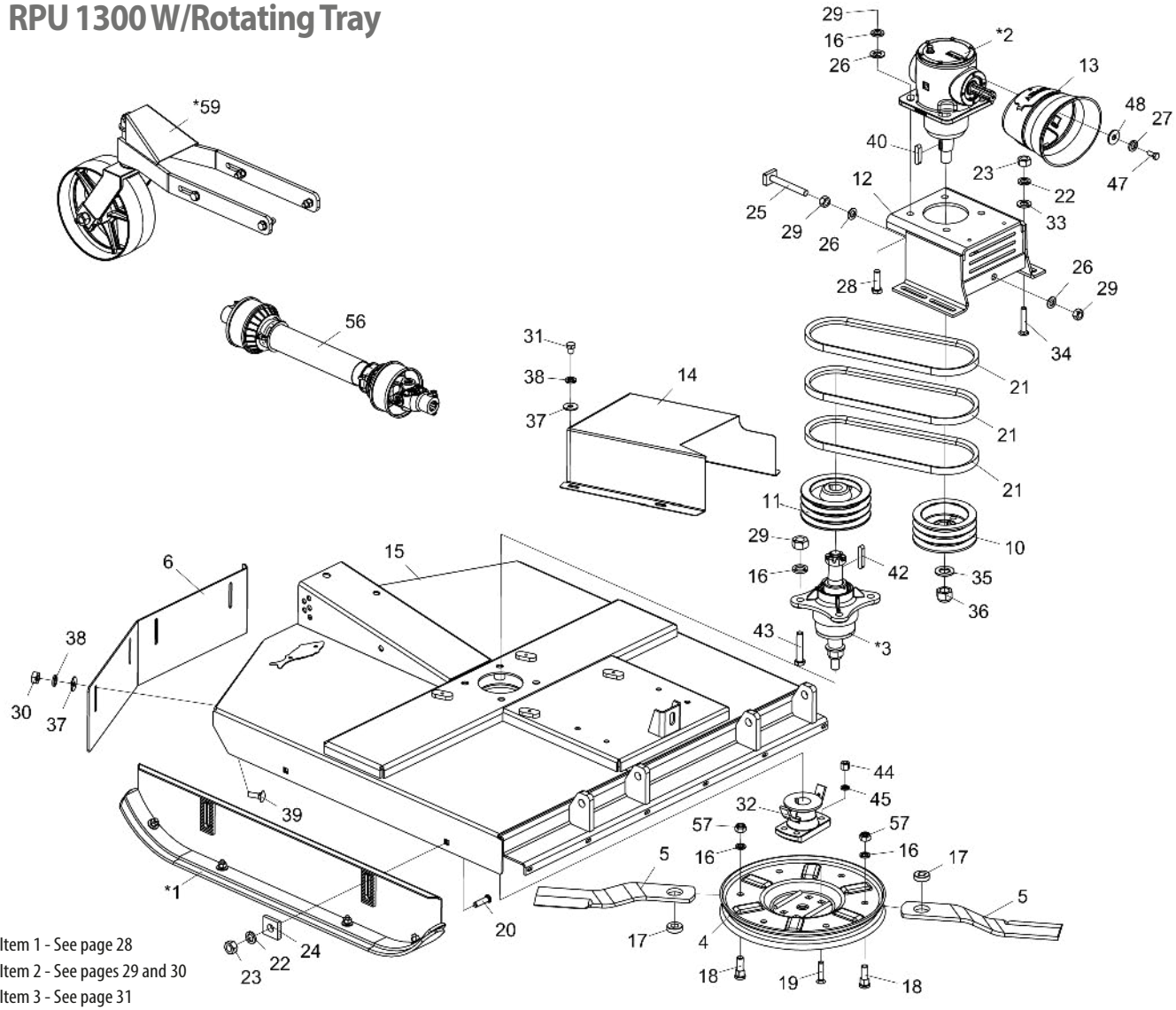

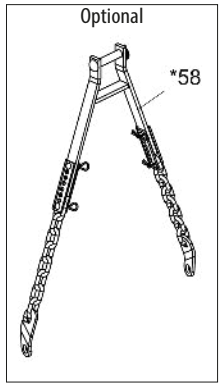

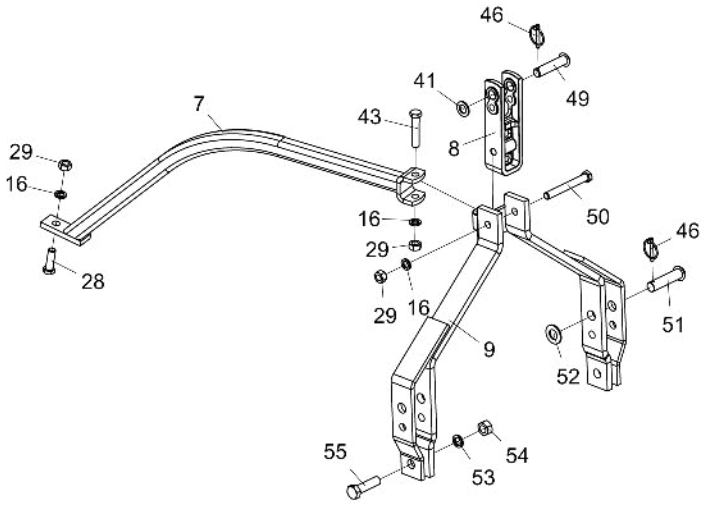

* Item 1 - See page 28
* Item 2 - See pages 29 and 30
* Item 3 - See page 31
* Item 58 - See page 34
* Item 59 - See page 35

For the purpose of replacing internal parts of the Multiplier Transmission Box (2), check the manufacturer's name on the box*

• Table RPU 1300 W/Rotating Tray

Item	Code	Product description	All
*1	5522010062-5	Complete Height Adjustment Ski	2
*2	6020057992-8	Transmision Box (BPN)	1
*2	6020059220-7	Transmission Box (COMER)	1
*3	5204010545-0	Complete Small Blade Hub	1
4	5038020001-2	Rotating Tray	1
5	4625265212-4	Blade 505 x 3.1/2" x 1/2" (Cut Simple)	2
6	5464010381-0	Rear Protection 1020Mm	1
7	5530012174-7	Support Of Drawbar	1
8	6010602571-4	Hitch Shackle 290Mm(Categoria 1 E 2)	1
9	5084010146-8	Hitch Drawbar	1
10	5448010035-5	Pulley 3 Canals	1
11	5448010001-0	Pulley 3 Canals Hub	1
12	5530017720-3	Transmission Box Fixation Support	1
13	6020310601-0	Protection Kit	1
14	5464010613-4	Pulley Protection	1
15	5092010603-7	Blade Protetion Box	1
16	6020010403-2	Pressure Washer M20 Media	13
17	5024070001-5	Smooth Washer Sq.20 X Ø49 X 15,00Mm	2
18	6020310946-9	Round Head Bolt M20 x 2,5 X 65mm CL8.8 RT	2
19	6020310227-8	Screw Type A3 5/8" X 2.3/4" 18F Unf1A Gr2 Rp	4
20	6020310938-8	French Head Bolt M16 x 2,00 x 60mm CL8.8 RP	4
21	6020050254-2	Belt C-51	3
22	6020010124-6	Pressure Washer M16 Media	8
23	6020310818-7	Hexagonal Nut M16 X 2,00 Ma Cl8 Ch.24Mm H.13,00Mm	8
24	6010601016-4	Small Plate	4
25	5268010868-4	Belt Stretcher	1
26	6020015986-4	Smooth Washer M20 (Ø21 x Ø37 x 3mm) Standart DIN 125	6
27	6020010004-5	Pressure Washer M8 Media	4
28	6020310188-3	Hexagonal Head Bolt M20 X 2,50 X 65Mm Cl8.8 Rp	5
29	6020311265-6	Hexagonal Nut M20 X 2,50 Ma Cl8 Ch.30Mm H.16,00Mm	15
30	6020310822-5	Hexagonal Nut M10 X 1,50 Ma Cl8 Ch.17Mm H.8,00Mm	4
31	6020310299-5	Hexagonal Head Bolt M10 X 1,50 X 15Mm Cl8.8 Rt	4
32	5368010891-5	Tray Fixation Bearing W/Scrapper	1
33	6020015985-6	Smooth Washer M16 (Ø17 x Ø30 x 3mm) Standart DIN 125	4
34	6020310574-9	French Head Bolt M16 X 2,00 X 90Mm Cl8.8 Rp	4
35	6020010453-9	Smooth Washer M33 Ø34,00 X Ø60,00 X 5,00mm (Din 125A)	1

Item	Code	Product description	All
36	6020310795-4	Self-Locking Nut With Nylon 1.1/4" 12F Unf Gr5 Ch.1.7/8" H.33,00Mm	1
37	6020010443-1	Smooth Washer M10 Ø10,50XØ30,00X2,50mm(DIN 9021)	8
38	6020010394-0	Pressure Washer M10 Media	8
39	6020317544-5	French Head Bolt M10 X 1,50 X 30Mm Cl8.8 Rt	4
40	6020058892-7	Cotter Sq.3/8" x 44mm	2
41	5024010039-5	Smooth Washer Ø26,2 X Ø44 X 4,75Mm	1
42	6020058893-5	Cotter Sq.3/8" x 52mm	1
43	6020317430-9	Hexagonal Head Bolt M20 X 2,50 X 100Mm Cl8.8 Rp	5
44	6020310808-0	Double Hexagonal Nut 5/8" 18F Unf Gr5 Ch.15/16" H.21,50Mm	4
45	6020010412-1	Pressure Washer 5/8" Media Industry	4
46	6020390293-2	Lock Ø5,75 X 40Mm	3
47	6020311269-9	Hexagonal Head Bolt M8 X 1,25 X 20Mm Cl8.8 Rt	4
48	6020010448-2	Smooth Washer M8 Ø8,40XØ24,00X2,00mm(DIN 9021)	4
49	6020310595-1	French Head Pin Ø1" X 105mm	1
50	6020312506-5	Hexagonal Head Bolt M20 X 2,50 X 160Mm Cl8.8 Rp	1
51	6020310660-5	Pin Ø28 x 105mm	2
52	6020010450-4	Smooth Washer M33 Ø31,00 x Ø56,00 x 4,00mm (DIN 125A)	2
53	6020010196-3	Pressure Washer M24 Media (	2
54	6020310457-2	Hexagonal Nut M24 X 3,00 Ma Cl8 Ch.36Mm H.19,00Mm	2
55	6020310935-3	Hexagonal Head Bolt M24 X 3,00 X 90mm CL8.8 RP	2
56	6020050789-7	Cardan Cra 353Tr X 353Pi X 500Tb With Cp (Stu)	1
57	6020310837-3	Self-Locking Nut With Nylon M20 X 2,50 Ma Cl8 Ch.30Mm H.18,70Mm	2
*58	5252010120-9	Limiter Height Hitch	1
*59	5530018139-1	Depth Wheel W/Bearing	1

• RP 1500 W/Blades Support Bar

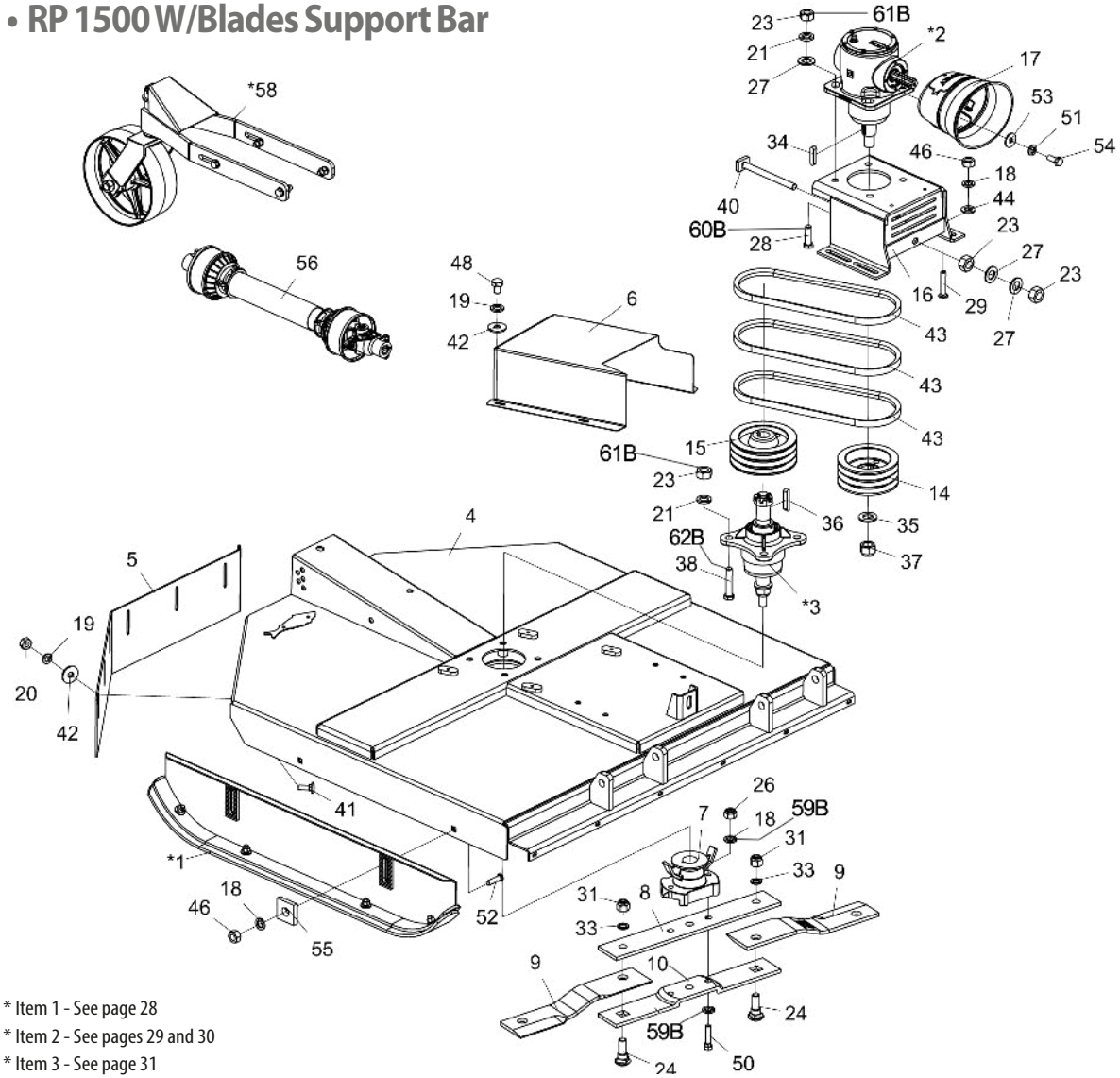

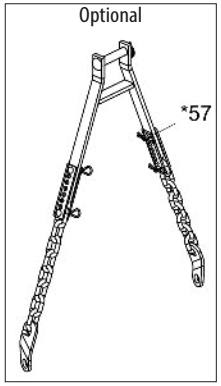

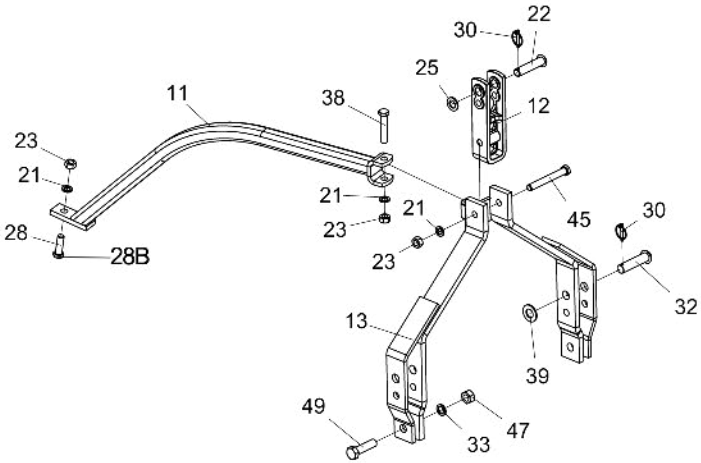

* Item 1 - See page 28
* Item 2 - See pages 29 and 30
* Item 3 - See page 31
* Item 57 - See page 34
* Item 58 - See page 35

Note: Items 18 A,21 A,23A,26A,28A 38A r , use until 10/2023, and items 18B,21B,23B,26B,28B,38B ,59B,60B,61B and 62B use from 11/2023.

For the purpose of replacing internal parts of the Multiplier Transmission Box (2), check the manufacturer's name on the box*

• Table RP 1500 W/Blades Support Bar

Item	Code	Product description	All
*1	5522010062-5	Complete Height Adjustment Ski	2
*2	6020057992-8	Transmision Box (BPN)	1
*2	6020059220-7	Transmission Box (COMER)	1
*3	5204010545-0	Complete Small Blade Hub	1
4	5092010601-0	Blades Protection Box (RP-RPU 1500)	1
5	5464010382-8	Rear Protection 1250 mm	1
6	5464010613-4	Pulley Protection	1
7	5368010141-4	Fixation Bearing Of Blades With Scraper	1
8	5040140011-4	Upper Blades Support Bar	1
9	4625265611-1	Knife 540 X 100 X 12mm Double Cut Extra Strong Steel	2
10	5040140012-2	Lower Blades Support Bar	1
11	5530012174-7	Support Of Drawbar	1
12	6010602571-4	Hitch Shackle 290Mm(Categoria 1 and 2)	1
13	5084010146-8	Hitch Drawbar	1
14	5448010035-5	Pulley 3 Canals	1
15	5448010001-0	Pulley 3 Canals Hub	1
16	5530017720-3	Transmission Box Fixation Support	1
17	6020310601-0	Protection Kit	1
18A	6020010124-6	Pressure Washer M16 Media	10
18B	6020010124-6	Pressure Washer M16 Media	8
19	6020010394-0	Pressure Washer M10 Media	10
20	6020310822-5	Hexagonal Nut M10 X 1,50 Ma Cl8 Ch.17Mm H.8,00Mm	6
21A	6020010403-2	Pressure Washer M20 Media	11
21B	6020010403-2	Pressure Washer M20 Media	3
22	6020310595-1	French Head Pin Ø1"X 105mm	1
23A	6020311265-6	Hexagonal Nut M20 X 2,50 Ma Cl8 Ch.30Mm H.16,00Mm	13
23B	6020311265-6	Hexagonal Nut M20 X 2,50 Ma Cl8 Ch.30Mm H.16,00Mm	5
24	6020310934-5	French Head Bolt M24 x 3,00 x 80mm CL8.8 Special	2
25	5024010039-5	Smooth Washer Ø26,2 X Ø44 X 4,75Mm	1
26A	6020317443-0	Self-Locking Nut With Nylon M16 X 2,00 Ma Cl8 Ch.24Mm H.16,00Mm	2
26B	6020317434-1	Hex Nut M16 x 1.50 MB CL8 CH.24mm H 13mm	2
27	6020015986-4	Smooth Washer M20 (Ø21 x Ø37 x 3mm) Standart DIN 125	6
28A	6020310188-3	Hexagonal Head Bolt M20 X 2,50 X 65Mm Cl8.8 Rp	5
28B	6020310188-3	Hexagonal Head Bolt M20 X 2,50 X 65Mm Cl8.8 Rp	1
29	6020310574-9	French Head Bolt M16 X 2,00 X 90Mm Cl8.8 Rp	4

Item	Code	Product description	All
30	6020390293-2	Lock Ø5,75 X 40Mm	3
31	6020310338-0	Self-Locking Nut With Nylon M24 X 3,00 Ma Cl8 Ch.36Mm H.15,00Mm(White Galnanised)	2
32	6020310660-5	Pin Ø28 x 105mm	2
33	6020010196-3	Pressure Washer M24 Media (	4
34	6020058892-7	Cotter Sq.3/8" x 44mm	2
35	6020010453-9	Smooth Washer M33 Ø34,00 X Ø60,00 X 5,00mm (Din 125A)	1
36	6020058893-5	Cotter Sq.3/8" x 52mm	1
37	6020310795-4	Self-Locking Nut With Nylon 1.1/4" 12F Unf Gr5 Ch.1.7/8" H.33,00Mm	1
38A	6020317430-9	Hexagonal Head Bolt M20 X 2,50 X 100Mm Cl8.8 Rp	5
38B	6020317430-9	Hexagonal Head Bolt M20 X 2,50 X 100Mm Cl8.8 Rp	1
39	6020010450-4	Smooth Washer M33 Ø31,00 x Ø56,00 x 4,00mm (DIN 125A)	2
40	5268010867-6	Belt Stretcher 230mm	1
41	6020317544-5	French Head Bolt M10 X 1,50 X 30Mm Cl8.8 Rt	6
42	6020010443-1	Smooth Washer M10 Ø10,50XØ30,00X2,50mm(DIN 9021)	10
43	6020050254-2	Belt C-51	3
44	6020015985-6	Smooth Washer M16 (Ø17 x Ø30 x 3mm) Standart DIN 125	4
45	6020312506-5	Hexagonal Head Bolt M20 X 2,50 X 160Mm Cl8.8 Rp	1
46	6020310818-7	Hexagonal Nut M16 X 2,00 Ma Cl8 Ch.24Mm H.13,00Mm	8
47	6020310457-2	Hexagonal Nut M24 X 3,00 Ma Cl8 Ch.36Mm H.19,00Mm	2
48	6020310299-5	Hexagonal Head Bolt M10 X 1,50 X 15Mm Cl8.8 Rt	4
49	6020310935-3	Hexagonal Head Bolt M24 X 3,00 X 90mm CL8.8 RP	2
50	6020310933-7	Hexagonal Head Bolt M16 x 2,00 x 75mm CL8.8 RP Special	2
51	6020010004-5	Pressure Washer M8 Media	4
52	6020310938-8	French Head Bolt M16 x 2,00 x 60mm CL8.8 RP	4
53	6020010448-2	Smooth Washer M8 Ø8,40XØ24,00X2,00mm(DIN 9021)	4
54	6020311269-9	Hexagonal Head Bolt M8 X 1,25 X 20Mm Cl8.8 Rt	4
55	6010601016-4	Small Plate	4
56	6020050789-7	Cardan Cra 353Tr X 353Pi X 500Tb With Cp (Stu)	1
*57	5252010120-9	Limiter Height Hitch	1
*58	5530018139-1	Depth Wheel W/Bearing	1
59B	6020016250-4	Wedge Lock Washer M16 DIN25201	4
60B	6020317623-9	Hex Cab Screw M20 X 1.50 X 65mm CL8.8 RP	4
61B	6020310848-9	Self-locking Hex Nut. C/Low Nylon M20 X 1.50 MB CL8 CH.30mm H 22mm	8
62B	6020317624-7	Hexagonal Head Screw M20 X 1.50 X 100mm CL8.8 RP	4

• RP 1500 W/Rotating Tray

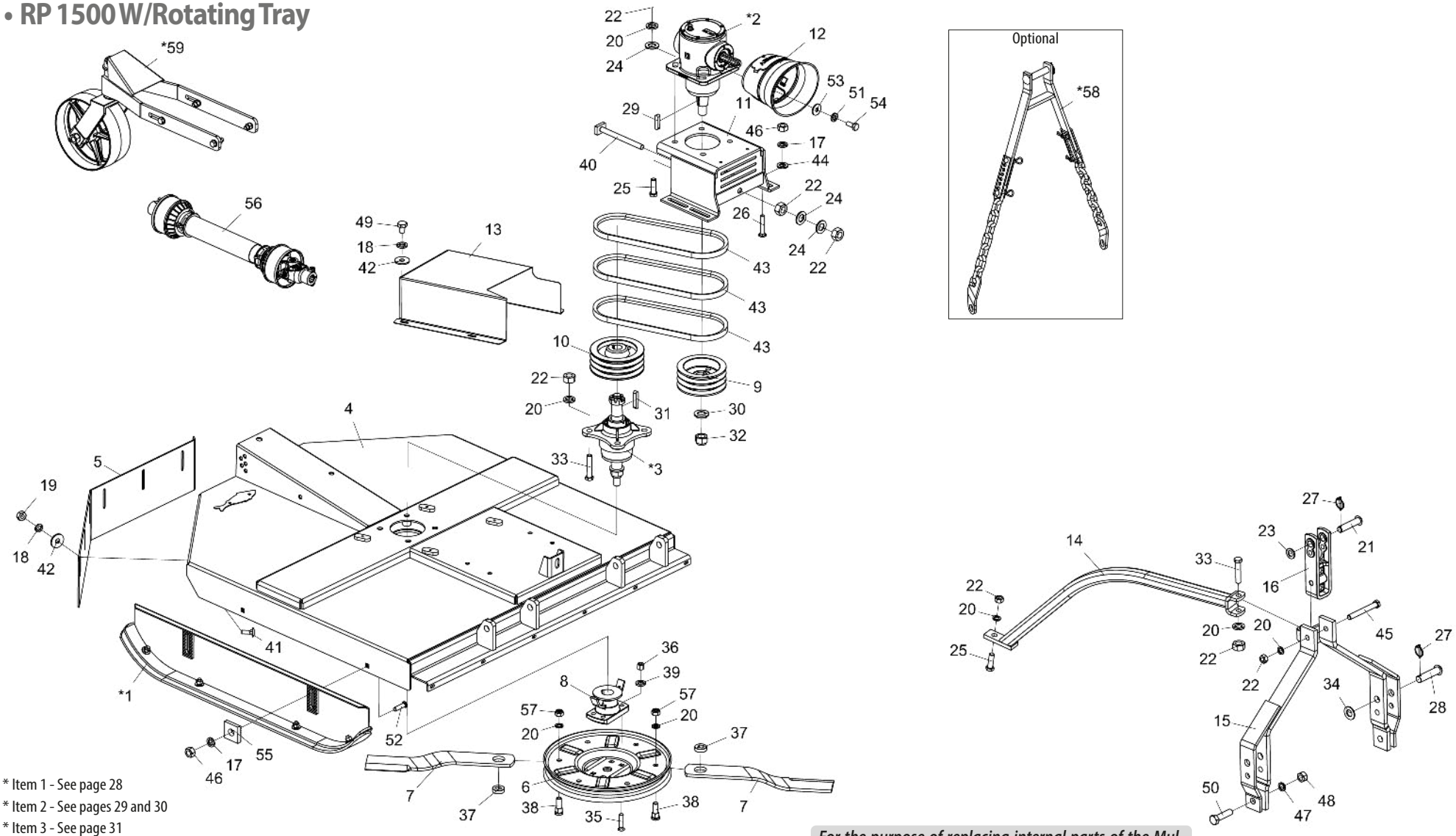

* Item 1 - See page 28
* Item 2 - See pages 29 and 30
* Item 3 - See page 31
* Item 58 - See page 34
* Item 59 - See page 35

For the purpose of replacing internal parts of the Multiplier Transmission Box (2), check the manufacturer's name on the box*

• Table RP 1500 W/Rotating Tray

Item	Code	Product description	All
*1	5522010062-5	Complete Height Adjustment Ski	2
*2	6020057992-8	Transmision Box (BPN)	1
*2	6020059220-7	Transmission Box (COMER)	1
*3	5204010545-0	Complete Small Blade Hub	1
4	5092010601-0	Blades Protection Box (RP-RPU 1500)	1
5	5464010382-8	Rear Protection 1250 mm	1
6	5038020001-2	Rotating Tray	1
7	4625266010-0	Blade 605 X 3.1/2" X 1/2" Single Edge	2
8	5368010891-5	Tray Fixation Bearing W/Scrapper	1
9	5448010035-5	Pulley 3 Canals	1
10	5448010001-0	Pulley 3 Canals Hub	1
11	5530017720-3	Transmission Box Fixation Support	1
12	6020310601-0	Protection Kit	1
13	5464010613-4	Pulley Protection	1
14	5530012174-7	Support Of Drawbar	1
15	5084010146-8	Hitch Drawbar	1
16	6010602571-4	Hitch Shackle 290Mm(Categoria 1 E 2)	1
17	6020010124-6	Pressure Washer M16 Media	8
18	6020010394-0	Pressure Washer M10 Media	10
19	6020310822-5	Hexagonal Nut M10 X 1,50 Ma Cl8 Ch.17Mm H.8,00Mm	6
20	6020010403-2	Pressure Washer M20 Media	13
21	6020310595-1	French Head Pin Ø1" X 105mm	1
22	6020311265-6	Hexagonal Nut M20 X 2,50 Ma Cl8 Ch.30Mm H.16,00Mm	15
23	5024010039-5	Smooth Washer Ø26,2 X Ø44 X 4,75Mm	1
24	6020015986-4	Smooth Washer M20 (Ø21 x Ø37 x 3mm) Standart DIN 125	6
25	6020310188-3	Hexagonal Head Bolt M20 X 2,50 X 65Mm Cl8.8 Rp	5
26	6020310574-9	French Head Bolt M16 X 2,00 X 90Mm Cl8.8 Rp	4
27	6020390293-2	Lock Ø5,75 X 40Mm	3
28	6020310660-5	Pin Ø28 x 105mm	2
29	6020058892-7	Cotter Sq.3/8" x 44mm	2
30	6020010453-9	Smooth Washer M33 Ø34,00 X Ø60,00 X 5,00mm (Din 125A)	1
31	6020058893-5	Cotter Sq.3/8" x 52mm	1
32	6020310795-4	Self-Locking Nut With Nylon 1.1/4" 12F Unf Gr5 Ch.1.7/8" H.33,00Mm	1
33	6020317430-9	Hexagonal Head Bolt M20 X 2,50 X 100Mm Cl8.8 Rp	5
34	6020010450-4	Smooth Washer M33 Ø31,00 x Ø56,00 x 4,00mm (DIN 125A)	2
35	6020310227-8	Screw Type A3 5/8" X 2.3/4" 18F Unf1A Gr2 Rp	4
36	6020310808-0	Double Hexagonal Nut 5/8" 18F Unf Gr5 Ch.15/16" H.21,50Mm	4
37	5024070001-5	Smooth Washer Sq.20 X Ø49 X 15,00Mm	2
38	6020310946-9	Round Head Bolt M20 x 2,5 X 65mm CL8.8 RT	2
39	6020010412-1	Pressure Washer 5/8" Media Industry	4
40	5268010867-6	Belt Stretcher 230mm	1
41	6020317544-5	French Head Bolt M10 X 1,50 X 30Mm Cl8.8 Rt	6
42	6020010443-1	Smooth Washer M10 Ø10,50XØ30,00X2,50mm(DIN 9021)	10
43	6020050254-2	Belt C-51	3
44	6020015985-6	Smooth Washer M16 (Ø17 x Ø30 x 3mm) Standart DIN 125	4
45	6020312506-5	Hexagonal Head Bolt M20 X 2,50 X 160Mm Cl8.8 Rp	1
46	6020310818-7	Hexagonal Nut M16 X 2,00 Ma Cl8 Ch.24Mm H.13,00Mm	8
47	6020010196-3	Pressure Washer M24 Media (	2
48	6020310457-2	Hexagonal Nut M24 X 3,00 Ma Cl8 Ch.36Mm H.19,00Mm	2
49	6020310299-5	Hexagonal Head Bolt M10 X 1,50 X 15Mm Cl8.8 Rt	4
50	6020310935-3	Hexagonal Head Bolt M24 X 3,00 X 90mm CL8.8 RP	2
51	6020010004-5	Pressure Washer M8 Media	4
52	6020310938-8	French Head Bolt M16 x 2,00 x 60mm CL8.8 RP	4
53	6020010448-2	Smooth Washer M8 Ø8,40XØ24,00X2,00mm(DIN 9021)	4
54	6020311269-9	Hexagonal Head Bolt M8 X 1,25 X 20Mm Cl8.8 Rt	4
55	6010601016-4	Small Plate	4
56	6020050789-7	Cardan Cra 353Tr X 353Pi X 500Tb With Cp (Stu)	1
57	6020310837-3	Self-Locking Nut With Nylon M20 X 2,50 Ma Cl8 Ch.30Mm H.18,70Mm	2
*58	5252010120-9	Limiter Height Hitch	1
*59	5530018139-1	Depth Wheel W/Bearing	1

• RPU 1500 W/Blades Support Bar

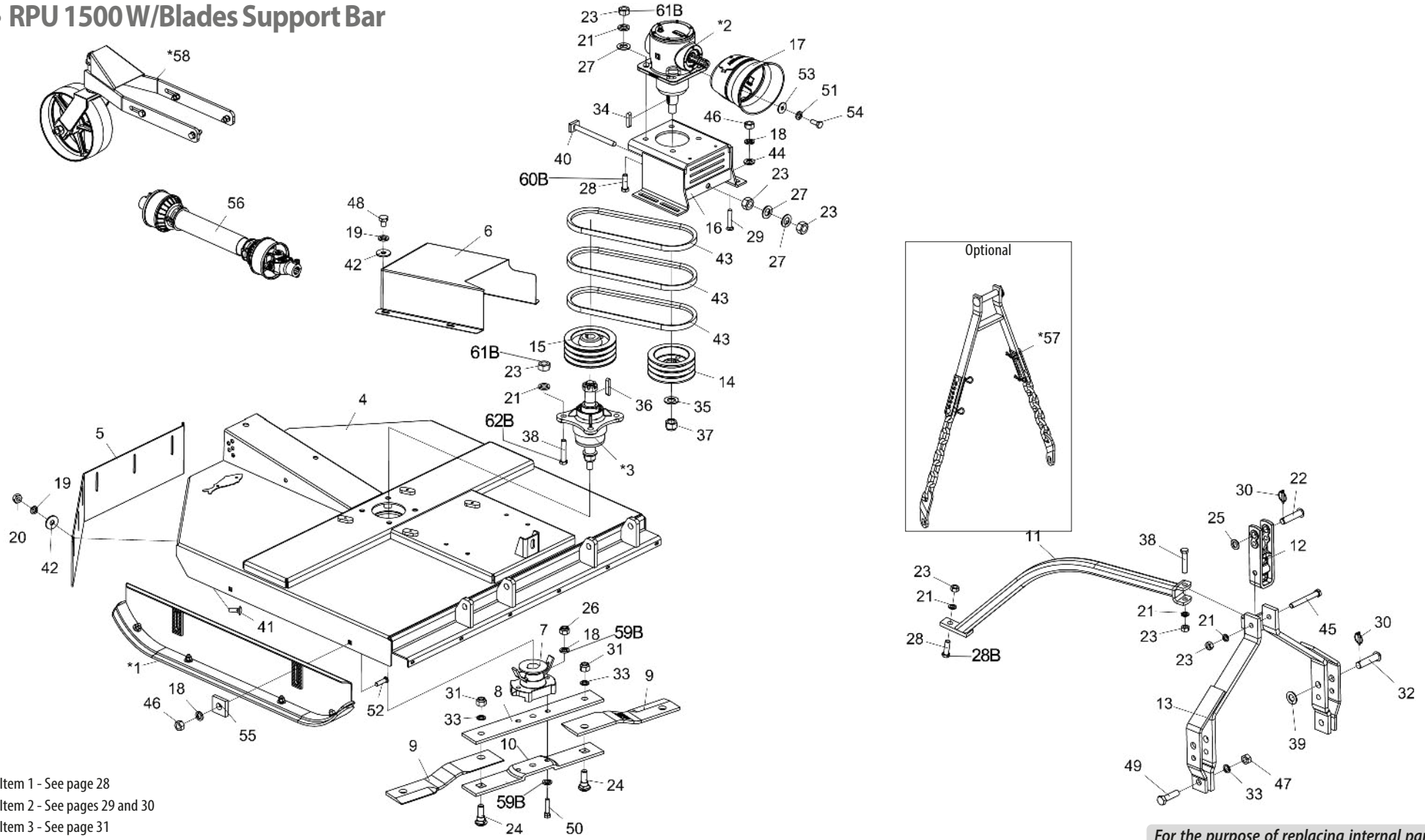

* Item 1 - See page 28
* Item 2 - See pages 29 and 30
* Item 3 - See page 31
* Item 57 - See page 34
* Item 58 - See page 35

Note: Items 18 A,21 A,23A,26A,28A 38A r , use until 10/2023, and items 18B,21B,23B,26B,28B,38B ,59B,60B,61B and 62B use from 11/2023.

For the purpose of replacing internal parts of the Multiplier Transmission Box (2), check the manufacturer's name on the box*

• Table RPU 1500 W/Blades Support Bar

Item	Code	Product description	All
*1	5522010062-5	Complete Height Adjustment Ski	2
*2	6020057992-8	Transmision Box (BPN)	1
*2	6020059220-7	Transmission Box (COMER)	1
*3	5204010545-0	Complete Small Blade Hub	1
4	5092010601-0	Blades Protection Box (RP-RPU 1500)	1
5	5464010382-8	Rear Protection 1250 mm	1
6	5464010613-4	Pulley Protection	1
7	5368010141-4	Fixation Bearing Of Blades With Scraper	1
8	5040140011-4	Upper Blades Support Bar	1
9	4625265611-1	Knife 540 X 100 X 12mm Double Cut Extra Strong Steel	2
10	5040140012-2	Lower Blades Support Bar	1
11	5530012174-7	Support Of Drawbar	1
12	6010602571-4	Hitch Shackle 290Mm(Categoria 1 and 2)	1
13	5084010146-8	Hitch Drawbar	1
14	5448010035-5	Pulley 3 Canals	1
15	5448010001-0	Pulley 3 Canals Hub	1
16	5530017720-3	Transmission Box Fixation Support	1
17	6020310601-0	Protection Kit	1
18A	6020010124-6	Pressure Washer M16 Media	10
18B	6020010124-6	Pressure Washer M16 Media	8
19	6020010394-0	Pressure Washer M10 Media	10
20	6020310822-5	Hexagonal Nut M10 X 1,50 Ma Cl8 Ch.17Mm H.8,00Mm	6
21A	6020010403-2	Pressure Washer M20 Media	11
21B	6020010403-2	Pressure Washer M20 Media	3
22	6020310595-1	French Head Pin Ø1" X 105mm	1
23A	6020311265-6	Hexagonal Nut M20 X 2,50 Ma Cl8 Ch.30Mm H.16,00Mm	13
23B	6020311265-6	Hexagonal Nut M20 X 2,50 Ma Cl8 Ch.30Mm H.16,00Mm	5
24	6020310934-5	French Head Bolt M24 x 3,00 x 80mm CL8.8 Special	2
25	5024010039-5	Smooth Washer Ø26,2 X Ø44 X 4,75Mm	1
26A	6020317443-0	Self-Locking Nut With Nylon M16 X 2,00 Ma Cl8 Ch.24Mm H.16,00Mm	2
26B	6020317434-1	Hex Nut M16 X 1.50 MB CL8 CH.24mm Height 13mm	2
27	6020015986-4	Smooth Washer M20 (Ø21 x Ø37 x 3mm) Standart DIN 125	6
28A	6020310188-3	Hexagonal Head Bolt M20 X 2,50 X 65Mm Cl8.8 Rp	5
28B	6020310188-3	Hexagonal Head Bolt M20 X 2,50 X 65Mm Cl8.8 Rp	1
29	6020310574-9	French Head Bolt M16 X 2,00 X 90Mm Cl8.8 Rp	4

Item	Code	Product description	All
30	6020390293-2	Lock Ø5,75 X 40Mm	3
31	6020310338-0	Self-Locking Nut With Nylon M24 X 3,00 Ma Cl8 Ch.36Mm H.15,00Mm(White Galnanised)	2
32	6020310660-5	Pin Ø28 x 105mm	2
33	6020010196-3	Pressure Washer M24 Media (	4
34	6020058892-7	Cotter Sq.3/8" x 44mm	2
35	6020010453-9	Smooth Washer M33 Ø34,00 X Ø60,00 X 5,00mm (Din 125A)	1
36	6020058893-5	Cotter Sq.3/8" x 52mm	1
37	6020310795-4	Self-Locking Nut With Nylon 1.1/4" 12F Unf Gr5 Ch.1.7/8" H.33,00Mm	1
38A	6020317430-9	Hexagonal Head Bolt M20 X 2,50 X 100Mm Cl8.8 Rp	5
38B	6020317430-9	Hexagonal Head Bolt M20 X 2,50 X 100Mm Cl8.8 Rp	1
39	6020010450-4	Smooth Washer M33 Ø31,00 x Ø56,00 x 4,00mm (DIN 125A)	2
40	5268010867-6	Belt Stretcher 230mm	1
41	6020317544-5	French Head Bolt M10 X 1,50 X 30Mm Cl8.8 Rt	6
42	6020010443-1	Smooth Washer M10 Ø10,50XØ30,00X2,50mm(DIN 9021)	10
43	6020050254-2	Belt C-51	3
44	6020015985-6	Smooth Washer M16 (Ø17 x Ø30 x 3mm) Standart DIN 125	4
45	6020312506-5	Hexagonal Head Bolt M20 X 2,50 X 160Mm Cl8.8 Rp	1
46	6020310818-7	Hexagonal Nut M16 X 2,00 Ma Cl8 Ch.24Mm H.13,00Mm	8
47	6020310457-2	Hexagonal Nut M24 X 3,00 Ma Cl8 Ch.36Mm H.19,00Mm	2
48	6020310299-5	Hexagonal Head Bolt M10 X 1,50 X 15Mm Cl8.8 Rt	4
49	6020310935-3	Hexagonal Head Bolt M24 X 3,00 X 90mm CL8.8 RP	2
50	6020310933-7	Hexagonal Head Bolt M16 x 2,00 x 75mm CL8.8 RP Special	2
51	6020010004-5	Pressure Washer M8 Media	4
52	6020310938-8	French Head Bolt M16 x 2,00 x 60mm CL8.8 RP	4
53	6020010448-2	Smooth Washer M8 Ø8,40XØ24,00X2,00mm(DIN 9021)	4
54	6020311269-9	Hexagonal Head Bolt M8 X 1,25 X 20Mm Cl8.8 Rt	4
55	6010601016-4	Small Plate	4
56	6020050789-7	Cardan Cra 353Tr X 353Pi X 500Tb With Cp (Stu)	1
*57	5252010120-9	Limiter Height Hitch	1
*58	5530018139-1	Depth Wheel W/Bearing	1
59B	6020016250-4	Wedge Lock Washer	4
60B	6020317623-9	Head screw. Hexagon M20 X 1.50 X 65mm CL8.8 RP	4
61B	6020310848-9	Self-locking Hex Nut with low nylon M20 X 1.50 MB CL8 CH.0mm Height 22mm	8
62B	6020317624-7	Head screw. Hexagonal M20 X 1.50 X 100mm CL8.8 RP	4

• RPU 1500 W/Rotating Tray

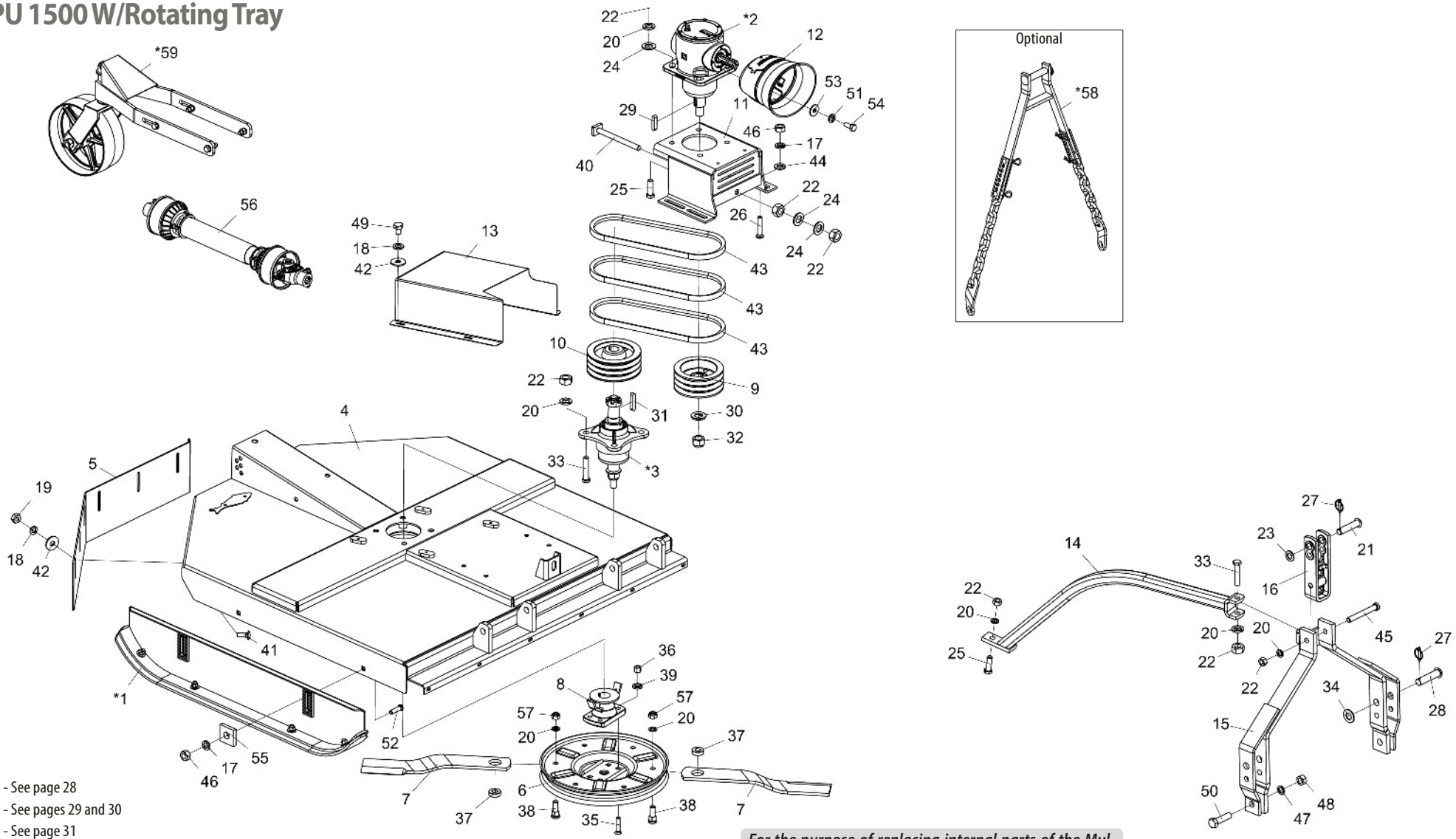

* Item 1 - See page 28
* Item 2 - See pages 29 and 30
* Item 3 - See page 31
* Item 57 - See page 34
* Item 58 - See page 35

For the purpose of replacing internal parts of the Multiplier Transmission Box (2), check the manufacturer's name on the box*

• Table RPU 1500 W/Rotating Tray

Item	Code	Product description	All
*1	5522010062-5	Complete Height Adjustment Ski	2
*2	6020057992-8	Transmision Box (BPN)	1
*2	6020059220-7	Transmission Box (COMER)	1
*3	5204010545-0	Complete Small Blade Hub	1
4	5092010601-0	Blades Protection Box (RP-RPU 1500)	1
5	5464010382-8	Rear Protection 1250 mm	1
6	5038020001-2	Rotating Tray	1
7	4625266010-0	Blade 605 X 3.1/2" X 1/2" Single Edge	2
8	5368010891-5	Tray Fixation Bearing W/Scrapper	1
9	5448010035-5	Pulley 3 Canals	1
10	5448010001-0	Pulley 3 Canals Hub	1
11	5530017720-3	Transmission Box Fixation Support	1
12	6020310601-0	Protection Kit	1
13	5464010613-4	Pulley Protection	1
14	5530012174-7	Support Of Drawbar	1
15	5084010146-8	Hitch Drawbar	1
16	6010602571-4	Hitch Shackle 290Mm(Categoria 1 E 2)	1
17	6020010124-6	Pressure Washer M16 Media	8
18	6020010394-0	Pressure Washer M10 Media	10
19	6020310822-5	Hexagonal Nut M10 X 1,50 Ma Cl8 Ch.17Mm H.8,00Mm	6
20	6020010403-2	Pressure Washer M20 Media	13
21	6020310595-1	French Head Pin Ø1" X 105mm	1
22	6020311265-6	Hexagonal Nut M20 X 2,50 Ma Cl8 Ch.30Mm H.16,00Mm	15
23	5024010039-5	Smooth Washer Ø26,2 X Ø44 X 4,75Mm	1
24	6020015986-4	Smooth Washer M20 (Ø21 x Ø37 x 3mm) Standart DIN 125	6
25	6020310188-3	Hexagonal Head Bolt M20 X 2,50 X 65Mm Cl8.8 Rp	5
26	6020310574-9	French Head Bolt M16 X 2,00 X 90Mm Cl8.8 Rp	4
27	6020390293-2	Lock Ø5,75 X 40Mm	3
28	6020310660-5	Pin Ø28 x 105mm	2
29	6020058892-7	Cotter Sq.3/8" x 44mm	2
30	6020010453-9	Smooth Washer M33 Ø34,00 X Ø60,00 X 5,00mm (Din 125A)	1
31	6020058893-5	Cotter Sq.3/8" x 52mm	1
32	6020310795-4	Self-Locking Nut With Nylon 1.1/4" 12F Unf Gr5 Ch.1.7/8" H.33,00Mm	1
33	6020317430-9	Hexagonal Head Bolt M20 X 2,50 X 100Mm Cl8.8 Rp	5
34	6020010450-4	Smooth Washer M33 Ø31,00 x Ø56,00 x 4,00mm (DIN 125A)	2
35	6020310227-8	Screw Type A3 5/8" X 2.3/4" 18F Unf1A Gr2 Rp 4	4
36	6020310808-0	Double Hexagonal Nut 5/8" 18F Unf Gr5 Ch.15/16" H.21,50Mm	4
37	5024070001-5	Smooth Washer Sq.20 X Ø49 X 15,00Mm	2
38	6020310946-9	Round Head Bolt M20 x 2,5 X 65mm CL8.8 RT	2
39	6020010412-1	Pressure Washer 5/8" Media Industry	4
40	5268010867-6	Belt Stretcher 230mm	1
41	6020317544-5	French Head Bolt M10 X 1,50 X 30Mm Cl8.8 Rt	6
42	6020010443-1	Smooth Washer M10 Ø10,50XØ30,00X2,50mm(DIN 9021)	10
43	6020050254-2	Belt C-51	3
44	6020015985-6	Smooth Washer M16 (Ø17 x Ø30 x 3mm) Standart DIN 125	4
45	6020312506-5	Hexagonal Head Bolt M20 X 2,50 X 160Mm Cl8.8 Rp	1
46	6020310818-7	Hexagonal Nut M16 X 2,00 Ma Cl8 Ch.24Mm H.13,00Mm	8
47	6020010196-3	Pressure Washer M24 Media (	2
48	6020310457-2	Hexagonal Nut M24 X 3,00 Ma Cl8 Ch.36Mm H.19,00Mm	2
49	6020310299-5	Hexagonal Head Bolt M10 X 1,50 X 15Mm Cl8.8 Rt	4
50	6020310935-3	Hexagonal Head Bolt M24 X 3,00 X 90mm CL8.8 RP	2
51	6020010004-5	Pressure Washer M8 Media	4
52	6020310938-8	French Head Bolt M16 x 2,00 x 60mm CL8.8 RP	4
53	6020010448-2	Smooth Washer M8 Ø8,40XØ24,00X2,00mm(DIN 9021)	4
54	6020311269-9	Hexagonal Head Bolt M8 X 1,25 X 20Mm Cl8.8 Rt	4
55	6010601016-4	Small Plate	4
56	6020050789-7	Cardan Cra 353Tr X 353Pi X 500Tb With Cp (Stu)	1
57	6020310837-3	Self-Locking Nut With Nylon M20 X 2,50 Ma Cl8 Ch.30Mm H.18,70Mm	2
*58	5252010120-9	Limiter Height Hitch	1
*59	5530018139-1	Depth Wheel W/Bearing	1

• RP 1700 W/Blades Support Bar

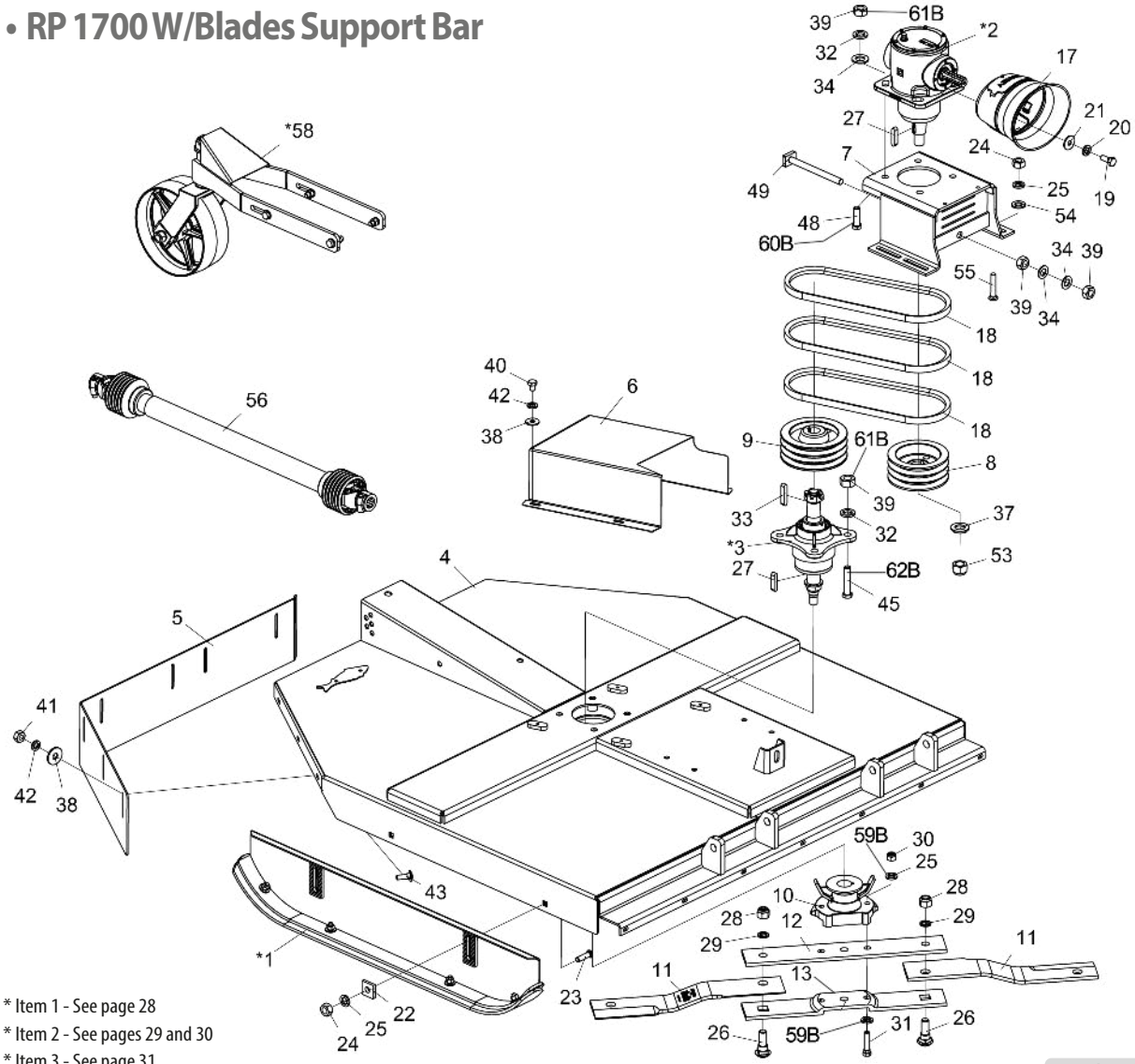

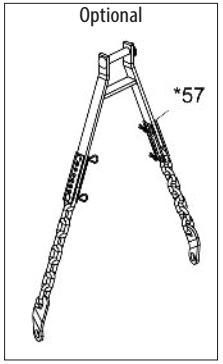

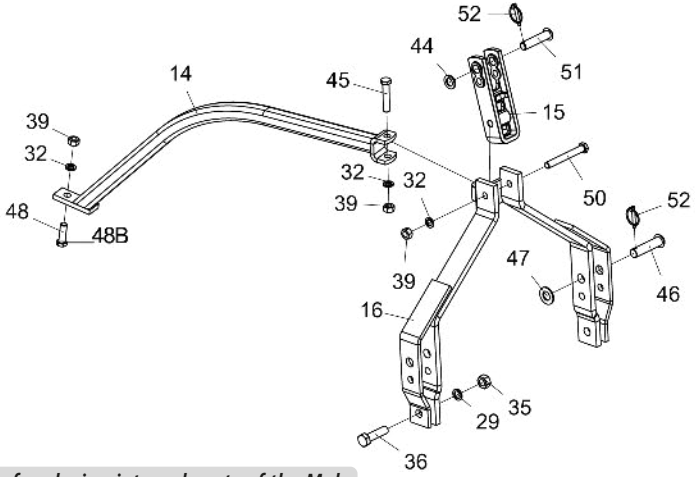

* Item 1 - See page 28
* Item 2 - See pages 29 and 30
* Item 3 - See page 31
* Item 57 - See page 34
* Item 58 - See page 35

Note: Items 12A,13A,25A,30A,31A ,32A,39A,45A and 48A use until 10/2023, and items 12B,13B,25B,30B,31B ,32B,39B,45B,48B,59B, 60B,61B and 62B use from 11/2023.

For the purpose of replacing internal parts of the Multiplier Transmission Box (2), check the manufacturer's name on the box*

• Table RP 1700 W/Blades Support Bar

Item	Code	Product description	All
*1	5522010062-5	Complete Height Adjustment Ski	2
*2	6020057992-8	Transmision Box (BPN)	1
*2	6020059220-7	Transmission Box (COMER)	1
*3	5204010545-0	Complete Small Blade Hub	1
4	5092010596-0	Blades Protection Box (RP - RPU 1700)	1
5	5464010383-6	Rear Protection 1730 mm	1
6	5464010613-4	Pulley Protection	1
7	5530017720-3	Transmission Box Fixation Support	1
8	5448010035-5	Pulley 3 Canals	1
9	5448010001-0	Pulley 3 Canals Hub	1
10	5368010141-4	Fixation Bearing Of Blades With Scraper	1
11	4625266256-1	Blade 635 x 100 x 12mm Extra strong double-cut steel	2
12A	5040140011-4	Upper Blades Support Bar	1
12B	5040011074-0	Upper Blades Support Bar	1
13A	5040140012-2	Lower Blades Support Bar	1
13B	5040011073-2	Lower Blades Support Bar	1
14	5530012174-7	Support Of Drawbar	1
15	6010602571-4	Hitch Shackle 290Mm(Categoria 1 and 2)	1
16	5084010146-8	Hitch Drawbar	1
17	6020310601-0	Protection Kit	1
18	6020050254-2	Belt C-51	3
19	6020311269-9	Hexagonal Head Bolt M8 X 1,25 X 20Mm Cl8.8 Rt	4
20	6020010004-5	Pressure Washer M8 Media	4
21	6020010448-2	Smooth Washer M8 Ø8,40XØ24,00X2,00mm(DIN 9021)	4
22	6010601016-4	Small Plate	4
23	6020310938-8	French Head Bolt M16 x 2,00 x 60mm CL8.8 RP	4
24	6020310818-7	Hexagonal Nut M16 X 2,00 Ma Cl8 Ch.24Mm H.13,00Mm	8
25A	6020010124-6	Pressure Washer M16 Media	10
25B	6020010124-6	Pressure Washer M16 Media	8
26	6020310934-5	French Head Bolt M24 x 3,00 x 80mm CL8.8 Special	2
27	6020058892-7	Cotter Sq.3/8" x 44mm	2
28	6020310338-0	Self-Locking Nut With Nylon M24 X 3,00 Ma Cl8 Ch.36Mm H.15,00Mm(White Galnanised)	2
29	6020010196-3	Pressure Washer M24 Media (	4
30A	6020317443-0	Self-Locking Nut With Nylon M16 X 2,00 Ma Cl8 Ch.24Mm H.16,00Mm	2
30B	6020317434-1	Hex Nut M16 X 1.50 X MB CL8 CH.24mm H 13mm	2
31A	6020310933-7	Hexagonal Head Bolt M16 x 2,00 x 75mm CL8.8 RP Special	2

Item	Code	Product description	All
31B	6020317861-4	Hex Head Screw M16 X 1.50 80mm CL8.8 RP	2
32A	6020010403-2	Pressure Washer M20 Media	11
32B	6020010403-2	Pressure Washer M20 Media	3
33	6020058893-5	Cotter Sq.3/8" x 52mm	1
34	6020015986-4	Smooth Washer M20 (Ø21 x Ø37 x 3mm) Standart DIN 125	6
35	6020310457-2	Hexagonal Nut M24 X 3,00 Ma Cl8 Ch.36Mm H.19,00Mm	2
36	6020310935-3	Hexagonal Head Bolt M24 X 3,00 X 90mm CL8.8 RP	2
37	6020010453-9	Smooth Washer M33 Ø34,00 X Ø60,00 X 5,00mm (Din 125A)	1
38	6020010443-1	Smooth Washer M10 Ø10,50XØ30,00X2,50mm(DIN 9021)	11
39A	6020311265-6	Hexagonal Nut M20 X 2,50 Ma Cl8 Ch.30Mm H.16,00Mm	13
39B	6020311265-6	Hexagonal Nut M20 X 2,50 Ma Cl8 Ch.30Mm H.16,00Mm	5
40	6020310299-5	Hexagonal Head Bolt M10 X 1,50 X 15Mm Cl8.8 Rt	4
41	6020310822-5	Hexagonal Nut M10 X 1,50 Ma Cl8 Ch.17Mm H.8,00Mm	7
42	6020010394-0	Pressure Washer M10 Media	11
43	6020317544-5	French Head Bolt M10 X 1,50 X 30Mm Cl8.8 Rt	7
44	5024010039-5	Smooth Washer Ø26,2 X Ø44 X 4,75Mm	1
45A	6020317430-9	Hexagonal Head Bolt M20 X 2,50 X 100Mm Cl8.8 Rp	5
45B	6020317430-9	Hexagonal Head Bolt M20 X 2,50 X 100Mm Cl8.8 Rp	1
46	6020310660-5	Pin Ø28 x 105mm	2
47	6020010450-4	Smooth Washer M33 Ø31,00 x Ø56,00 x 4,00mm (DIN 125A)	2
48A	6020310188-3	Hexagonal Head Bolt M20 X 2,50 X 65Mm Cl8.8 Rp	5
48B	6020310188-3	Hexagonal Head Bolt M20 X 2,50 X 65Mm Cl8.8 Rp	1
49	5268010867-6	Belt Stretcher 230mm	1
50	6020312506-5	Hexagonal Head Bolt M20 X 2,50 X 160Mm Cl8.8 Rp	1
51	6020310595-1	French Head Pin Ø1" X 105mm	1
52	6020390293-2	Lock Ø5,75 X 40Mm	3
53	6020310795-4	Self-Locking Nut With Nylon 1.1/4" 12F Unf Gr5 Ch.1.7/8" H.33,00Mm	1
54	6020015985-6	Smooth Washer M16 (Ø17 x Ø30 x 3mm) Standart DIN 125	4
55	6020310574-9	French Head Bolt M16 X 2,00 X 90Mm Cl8.8 Rp	4
56	6020050790-0	Cardan Cra 353Tr X 353Pi X 800Tb With Cp (Stu)	1
*57	5252010120-9	Limiter Height Hitch	1
*58	5530018139-1	Depth Wheel W/Bearing	1
59B	6020016250-4	Wedge Lock Washer M16 DIN25201	4
60B	6020317623-9	Hex Head Screw M20x 1.50 x 65mm CL8.8 RP	4
61B	6020310848-9	Self-locking Hex Nut with low nylon M20 X 1.50 MB CL8 CH30mm H22mm	8
62B	6020317624-7	Hex head screw M20 X 1.50 x 100mm CL8.8 RP	4

• RP 1700 W/Rotating Tray

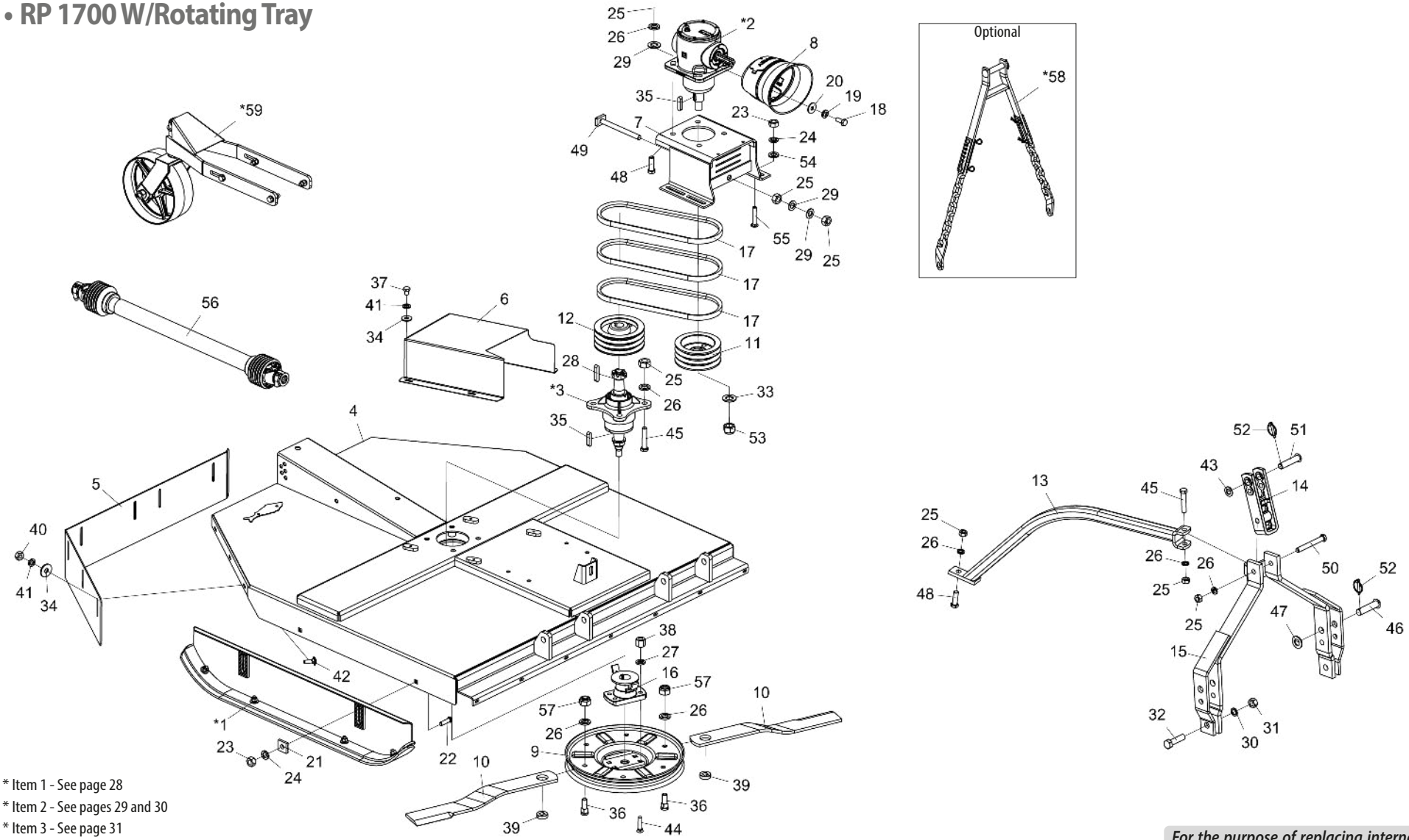

* Item 1 - See page 28
* Item 2 - See pages 29 and 30
* Item 3 - See page 31
* Item 58 - See page 34
* Item 59 - See page 35

For the purpose of replacing internal parts of the Multiplier Transmission Box (2), check the manufacturer's name on the box*

• Table RP 1700 W/Rotating Tray

Item	Code	Product description	All
*1	5522010062-5	Complete Height Adjustment Ski	2
*2	6020057992-8	Transmision Box (BPN)	1
*2	6020059220-7	Transmission Box (COMER)	1
*3	5204010545-0	Complete Small Blade Hub	1
4	5092010596-0	Blades Protection Box (RP - RPU 1700)	1
5	5464010383-6	Rear Protection 1730 mm	1
6	5464010613-4	Pulley Protection	1
7	5530017720-3	Transmission Box Fixation Support	1
8	6020310601-0	Protection Kit	1
9	5038020001-2	Rotating Tray	1
10	4625266816-0	Blade 715 mm x 3.1/2" of 1/2" (Simple)	2
11	5448010035-5	Pulley 3 Canals	1
12	5448010001-0	Pulley 3 Canals Hub	1
13	5530012174-7	Support Of Drawbar	1
14	6010602571-4	Hitch Shackle 290Mm(Categoria 1 E 2)	1
15	5084010146-8	Hitch Drawbar	1
16	5368010891-5	Tray Fixation Bearing W/Scrapper	1
17	6020050254-2	Belt C-51	3
18	6020311269-9	Hexagonal Head Bolt M8 X 1,25 X 20Mm Cl8.8 Rt	4
19	6020010004-5	Pressure Washer M8 Media	4
20	6020010448-2	Smooth Washer M8 Ø8,40XØ24,00X2,00mm(DIN 9021)	4
21	6010601016-4	Small Plate	4
22	6020310938-8	French Head Bolt M16 x 2,00 x 60mm CL8.8 RP	4
23	6020310818-7	Hexagonal Nut M16 X 2,00 Ma Cl8 Ch.24Mm H.13,00Mm	8
24	6020010124-6	Pressure Washer M16 Media	8
25	6020311265-6	Hexagonal Nut M20 X 2,50 Ma Cl8 Ch.30Mm H.16,00Mm	15
26	6020010403-2	Pressure Washer M20 Media	13
27	6020010412-1	Pressure Washer 5/8" Media Industry	4
28	6020058893-5	Cotter Sq.3/8" x 52mm	1
29	6020015986-4	Smooth Washer M20 (Ø21 x Ø37 x 3mm) Standart DIN 125	6
30	6020010196-3	Pressure Washer M24 Media (	2
31	6020310457-2	Hexagonal Nut M24 X 3,00 Ma Cl8 Ch.36Mm H.19,00Mm	2
32	6020310935-3	Hexagonal Head Bolt M24 X 3,00 X 90mm CL8.8 RP	2
33	6020010453-9	Smooth Washer M33 Ø34,00 X Ø60,00 X 5,00mm (Din 125A)	1
34	6020010443-1	Smooth Washer M10 Ø10,50XØ30,00X2,50mm(DIN 9021)	11
35	6020058892-7	Cotter Sq.3/8" x 44mm	2

Item	Code	Product description	All
36	6020310946-9	Round Head Bolt M20 x 2,5 X 65mm CL8.8 RT	2
37	6020310299-5	Hexagonal Head Bolt M10 X 1,50 X 15Mm Cl8.8 Rt	4
38	6020310808-0	Double Hexagonal Nut 5/8" 18F Unf Gr5 Ch.15/16" H.21,50Mm	4
39	5024070001-5	Smooth Washer Sq.20 X Ø49 X 15,00Mm	2
40	6020310822-5	Hexagonal Nut M10 X 1,50 Ma Cl8 Ch.17Mm H.8,00Mm	7
41	6020010394-0	Pressure Washer M10 Media	11
42	6020317544-5	French Head Bolt M10 X 1,50 X 30Mm Cl8.8 Rt	7
43	5024010039-5	Smooth Washer Ø26,2 X Ø44 X 4,75Mm	1
44	6020310227-8	Screw Type A3 5/8" X 2.3/4" 18F Unf1A Gr2 Rp	4
45	6020317430-9	Hexagonal Head Bolt M20 X 2,50 X 100Mm Cl8.8 Rp	5
46	6020310660-5	Pin Ø28 x 105mm	2
47	6020010450-4	Smooth Washer M33 Ø31,00 x Ø56,00 x 4,00mm (DIN 125A)	2
48	6020310188-3	Hexagonal Head Bolt M20 X 2,50 X 65Mm Cl8.8 Rp	5
49	5268010867-6	Belt Stretcher 230mm	1
50	6020312506-5	Hexagonal Head Bolt M20 X 2,50 X 160Mm Cl8.8 Rp	1
51	6020310595-1	French Head Pin Ø1" X 105mm	1
52	6020390293-2	Lock Ø5,75 X 40Mm	3
53	6020310795-4	Self-Locking Nut With Nylon 1.1/4" 12F Unf Gr5 Ch.1.7/8" H.33,00Mm	1
54	6020015985-6	Smooth Washer M16 (Ø17 x Ø30 x 3mm) Standart DIN 125	4
55	6020310574-9	French Head Bolt M16 X 2,00 X 90Mm Cl8.8 Rp	4
56	6020050790-0	Cardan Cra 353Tr X 353Pi X 800Tb With Cp (Stu)	1
57	6020310837-3	Self-Locking Nut With Nylon M20 X 2,50 Ma Cl8 Ch.30Mm H.18,70Mm	2
*58	5252010120-9	Limiter Height Hitch	1
*59	5530018139-1	Depth Wheel W/Bearing	1

• RPU 1700 W/Blades Support Bar

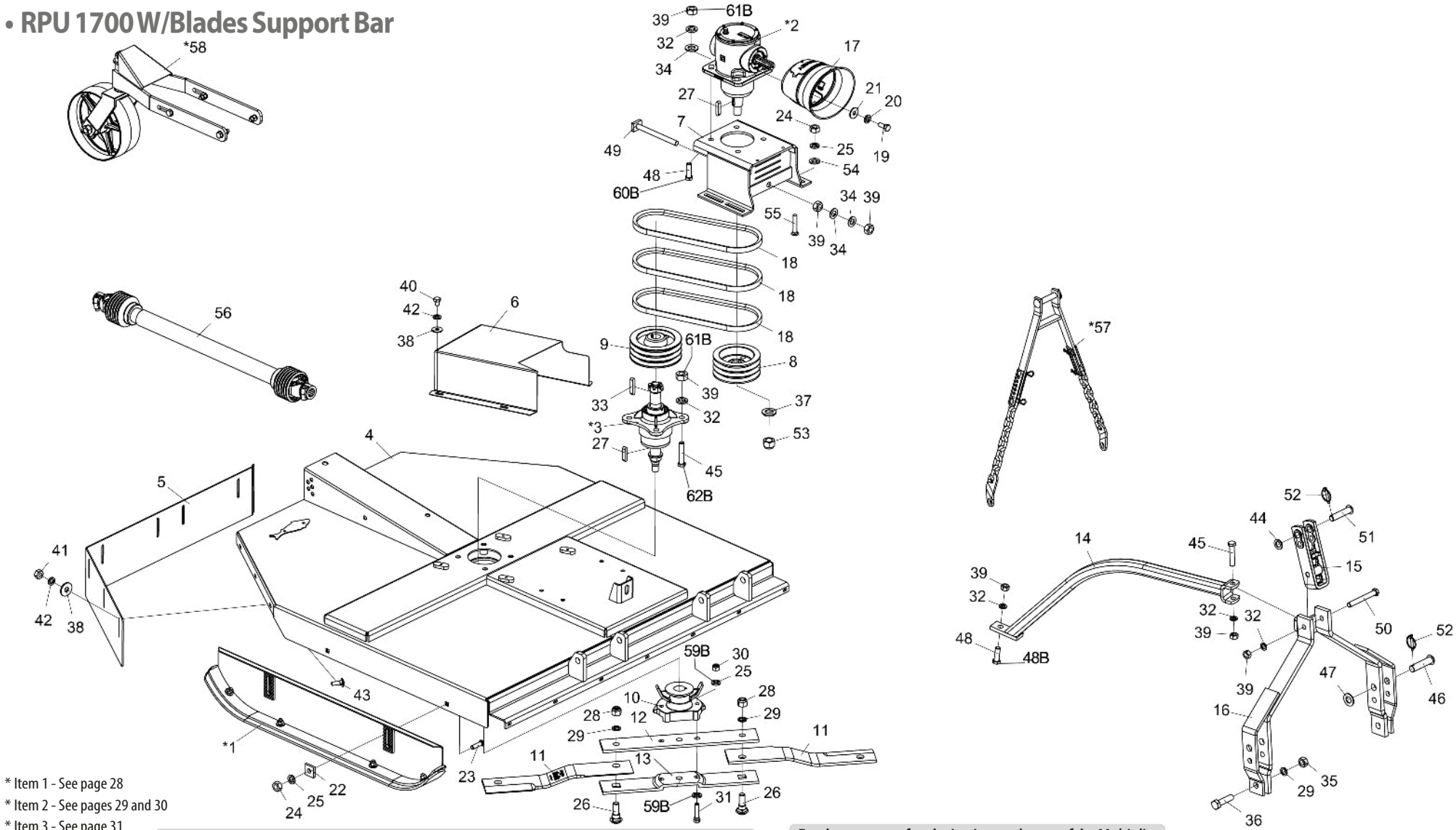

* Item 1 - See page 28
* Item 2 - See pages 29 and 30
* Item 3 - See page 31
* Item 57 - See page 34
* Item 58 - See page 35

Note: Items 12A,13A,25A,30A,31A,32A,39A,45A and 48A use until 10/2023, and items 12B,13B,25B,30B,31B,32B,39B,45B,48B,59B, 60B,61B and 62B use from 11/2023.

For the purpose of replacing internal parts of the Multiplier Transmission Box (2), check the manufacturer's name on the box*

• Table RPU 1700 W/Blades Support Bar

Item	Code	Product description	All
*1	5522010062-5	Complete Height Adjustment Ski	2
*2	6020057992-8	Transmision Box (BPN)	1
*2	6020059220-7	Transmission Box (COMER)	1
*3	5204010545-0	Complete Small Blade Hub	1
4	5092010596-0	Blades Protection Box (RP - RPU 1700)	1
5	5464010383-6	Rear Protection 1730 mm	1
6	5464010613-4	Pulley Protection	1
7	5530017720-3	Transmission Box Fixation Support	1
8	5448010035-5	Pulley 3 Canals	1
9	5448010001-0	Pulley 3 Canals Hub	1
10	5368010141-4	Fixation Bearing Of Blades With Scraper	1
11	4625266256-1	Blade 635 x 100 x 12mm Extra strong double-cut steel	2
12A	5040140011-4	Upper Blades Support Bar	1
12B	5040011074-0	Upper Blades Support Bar	1
13A	5040140012-2	Lower Blades Support Bar	1
13B	5040011073-2	Lower Blades Support Bar	1
14	5530012174-7	Support Of Drawbar	1
15	6010602571-4	Hitch Shackle 290Mm(Categoria 1 and 2)	1
16	5084010146-8	Hitch Drawbar	1
17	6020310601-0	Protection Kit	1
18	6020050254-2	Belt C-51	3
19	6020311269-9	Hexagonal Head Bolt M8 X 1,25 X 20Mm Cl8.8 Rt	4
20	6020010004-5	Pressure Washer M8 Media	4
21	6020010448-2	Smooth Washer M8 Ø8,40XØ24,00X2,00mm(DIN 9021)	4
22	6010601016-4	Small Plate	4
23	6020310938-8	French Head Bolt M16 x 2,00 x 60mm CL8.8 RP	4
24	6020310818-7	Hexagonal Nut M16 X 2,00 Ma Cl8 Ch.24Mm H.13,00Mm	8
25A	6020010124-6	Pressure Washer M16 Media	10
25B	6020010124-6	Pressure Washer M16 Media	8
26	6020310934-5	French Head Bolt M24 x 3,00 x 80mm CL8.8 Special	2
27	6020058892-7	Cotter Sq.3/8" x 44mm	2
28	6020310338-0	Self-Locking Nut With Nylon M24 X 3,00 Ma Cl8 Ch.36Mm H.15,00Mm(White Galnanised)	2
29	6020010196-3	Pressure Washer M24 Media (	4
30A	6020317443-0	Self-Locking Nut With Nylon M16 X 2,00 Ma Cl8 Ch.24Mm H.16,00Mm	2
30B	6020317434-1	Hex Nut M16 X 1.50 MB CL8 CH.24mm H.13mm	2
31A	6020310933-7	Hexagonal Head Bolt M16 x 2,00 x 75mm CL8.8 RP Special	2

Item	Code	Product description	All
31B	6020317861-4	Head screw. Hexagon M16 X 1.50 X 80mm CL8.8 RP	2
32A	6020010403-2	Pressure Washer M20 Media	11
32B	6020010403-2	Pressure Washer M20 Media	3
33	6020058893-5	Cotter Sq.3/8" x 52mm	1
34	6020015986-4	Smooth Washer M20 (Ø21 x Ø37 x 3mm) Standart DIN 125	6
35	6020310457-2	Hexagonal Nut M24 X 3,00 Ma Cl8 Ch.36Mm H.19,00Mm	2
36	6020310935-3	Hexagonal Head Bolt M24 X 3,00 X 90mm CL8.8 RP	2
37	6020010453-9	Smooth Washer M33 Ø34,00 X Ø60,00 X 5,00mm (Din 125A)	1
38	6020010443-1	Smooth Washer M10 Ø10,50XØ30,00X2,50mm(DIN 9021)	11
39A	6020311265-6	Hexagonal Nut M20 X 2,50 Ma Cl8 Ch.30Mm H.16,00Mm	13
39B	6020311265-6	Hexagonal Nut M20 X 2,50 Ma Cl8 Ch.30Mm H.16,00Mm	5
40	6020310299-5	Hexagonal Head Bolt M10 X 1,50 X 15Mm Cl8.8 Rt	4
41	6020310822-5	Hexagonal Nut M10 X 1,50 Ma Cl8 Ch.17Mm H.8,00Mm	7
42	6020010394-0	Pressure Washer M10 Media	11
43	6020317544-5	French Head Bolt M10 X 1,50 X 30Mm Cl8.8 Rt	7
44	5024010039-5	Smooth Washer Ø26,2 X Ø44 X 4,75Mm	1
45A	6020317430-9	Hexagonal Head Bolt M20 X 2,50 X 100Mm Cl8.8 Rp	5
45B	6020317430-9	Hexagonal Head Bolt M20 X 2,50 X 100Mm Cl8.8 Rp	1
46	6020310660-5	Pin Ø28 x 105mm	2
47	6020010450-4	Smooth Washer M33 Ø31,00 x Ø56,00 x 4,00mm (DIN 125A)	2
48A	6020310188-3	Hexagonal Head Bolt M20 X 2,50 X 65Mm Cl8.8 Rp	5
48B	6020310188-3	Hexagonal Head Bolt M20 X 2,50 X 65Mm Cl8.8 Rp	1
49	5268010867-6	Belt Stretcher 230mm	1
50	6020312506-5	Hexagonal Head Bolt M20 X 2,50 X 160Mm Cl8.8 Rp	1
51	6020310595-1	French Head Pin Ø1" X 105mm	1
52	6020390293-2	Lock Ø5,75 X 40Mm	3
53	6020310795-4	Self-Locking Nut With Nylon 1.1/4" 12F Unf Gr5 Ch.1.7/8" H.33,00Mm	1
54	6020015985-6	Smooth Washer M16 (Ø17 x Ø30 x 3mm) Standart DIN 125	4
55	6020310574-9	French Head Bolt M16 X 2,00 X 90Mm Cl8.8 Rp	4
56	6020050790-0	Cardan Cra 353Tr X 353Pi X 800Tb With Cp (Stu)	1
*57	5252010120-9	Limiter Height Hitch	1
*58	5530018139-1	Depth Wheel W/Bearing	1
59B	6020016250-4	Wedge Lock Washer M16 DIN25201	4
60B	6020317623-9	Head screw. Hexagon M20 X 1.50 X 65mm CL8.8 RP	4
61B	6020310848-9	Self-locking hexagonal nut with low nylon M20 X 1.50 MB CL8 CH.30mm H 22mm	8
62B	6020317624-7	Head screw. Hexagon M20 X 1.50 X 100mm CL8.8 RP	4

• RPU 1700 W/Rotating Tray

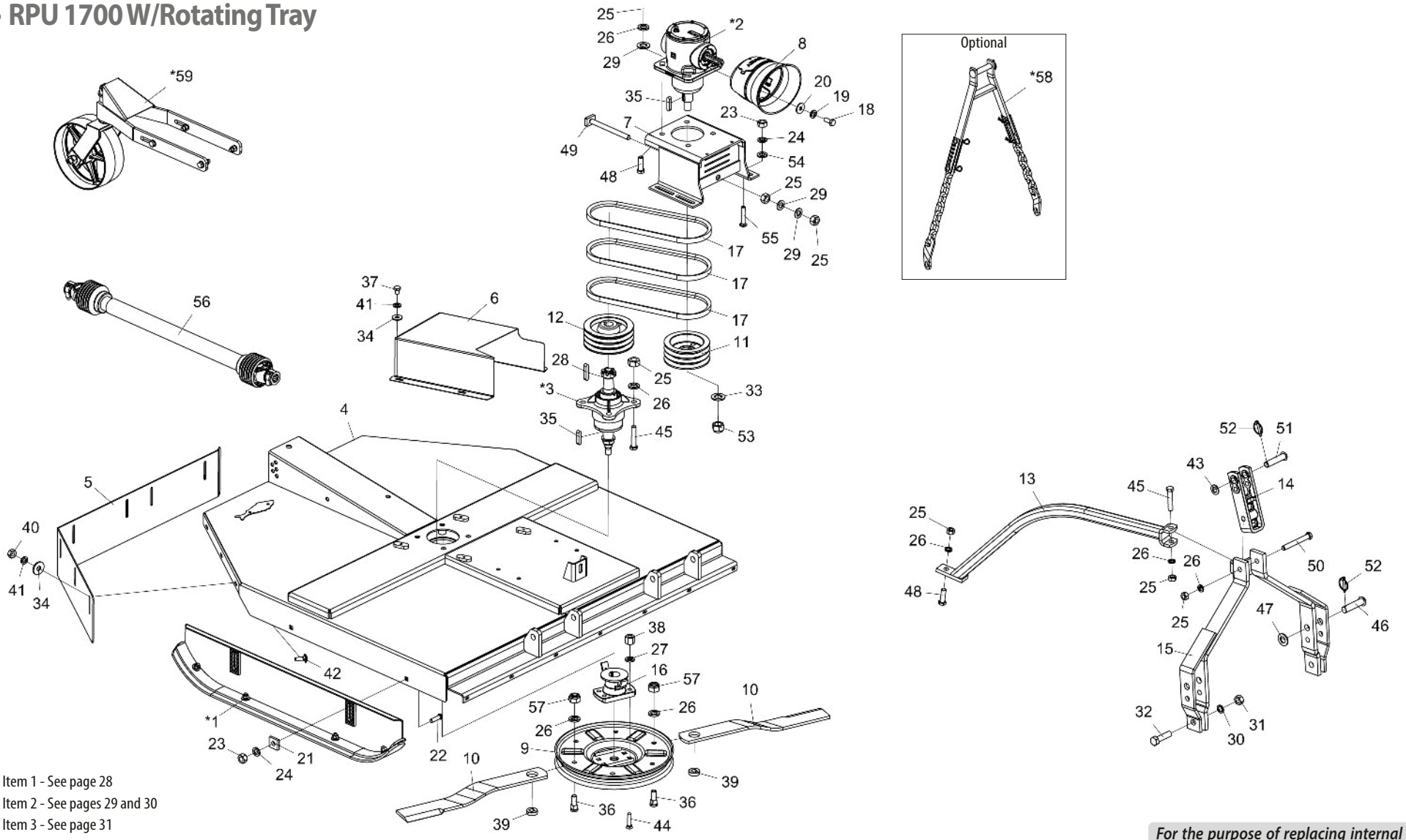

* Item 1 - See page 28
* Item 2 - See pages 29 and 30
* Item 3 - See page 31
* Item 57 - See page 34
* Item 58 - See page 35

For the purpose of replacing internal parts of the Multiplier Transmission Box (2), check the manufacturer's name on the box*

• Table RPU 1700 W/Rotating Tray

Item	Code	Product description	All
*1	5522010062-5	Complete Height Adjustment Ski	2
*2	6020057992-8	Transmision Box (BPN)	1
*2	6020059220-7	Transmission Box (COMER)	1
*3	5204010545-0	Complete Small Blade Hub	1
4	5092010596-0	Blades Protection Box (RP - RPU 1700)	1
5	5464010383-6	Rear Protection 1730 mm	1
6	5464010613-4	Pulley Protection	1
7	5530017720-3	Transmission Box Fixation Support	1
8	6020310601-0	Protection Kit	1
9	5038020001-2	Rotating Tray	1
10	4625266816-0	Blade 715 mm x 3.1/2" of 1/2" (Simple)	2
11	5448010035-5	Pulley 3 Canals	1
12	5448010001-0	Pulley 3 Canals Hub	1
13	5530012174-7	Support Of Drawbar	1
14	6010602571-4	Hitch Shackle 290Mm(Categoria 1 E 2)	1
15	5084010146-8	Hitch Drawbar	1
16	5368010891-5	Tray Fixation Bearing W/Scrapper	1
17	6020050254-2	Belt C-51	3
18	6020311269-9	Hexagonal Head Bolt M8 X 1,25 X 20Mm Cl8.8 Rt	4
19	6020010004-5	Pressure Washer M8 Media	4
20	6020010448-2	Smooth Washer M8 Ø8,40XØ24,00X2,00mm(DIN 9021)	4
21	6010601016-4	Small Plate	4
22	6020310938-8	French Head Bolt M16 x 2,00 x 60mm CL8.8 RP	4
23	6020310818-7	Hexagonal Nut M16 X 2,00 Ma Cl8 Ch.24Mm H.13,00Mm	8
24	6020010124-6	Pressure Washer M16 Media	8
25	6020311265-6	Hexagonal Nut M20 X 2,50 Ma Cl8 Ch.30Mm H.16,00Mm	15
26	6020010403-2	Pressure Washer M20 Media	13
27	6020010412-1	Pressure Washer 5/8" Media Industry	4
28	6020058893-5	Cotter Sq.3/8" x 52mm	1
29	6020015986-4	Smooth Washer M20 (Ø21 x Ø37 x 3mm) Standart DIN 125	6
30	6020010196-3	Pressure Washer M24 Media (	2
31	6020310457-2	Hexagonal Nut M24 X 3,00 Ma Cl8 Ch.36Mm H.19,00Mm	2
32	6020310935-3	Hexagonal Head Bolt M24 X 3,00 X 90mm CL8.8 RP	2
33	6020010453-9	Smooth Washer M33 Ø34,00 X Ø60,00 X 5,00mm (Din 125A)	1
34	6020010443-1	Smooth Washer M10 Ø10,50XØ30,00X2,50mm(DIN 9021)	11
35	6020058892-7	Cotter Sq.3/8" x 44mm	2

Item	Code	Product description	All
36	6020310946-9	Round Head Bolt M20 x 2,5 X 65mm CL8.8 RT	2
37	6020310299-5	Hexagonal Head Bolt M10 X 1,50 X 15Mm Cl8.8 Rt	4
38	6020310808-0	Double Hexagonal Nut 5/8" 18F Unf Gr5 Ch.15/16" H.21,50Mm	4
39	5024070001-5	Smooth Washer Sq.20 X Ø49 X 15,00Mm	2
40	6020310822-5	Hexagonal Nut M10 X 1,50 Ma Cl8 Ch.17Mm H.8,00Mm	7
41	6020010394-0	Pressure Washer M10 Media	11
42	6020317544-5	French Head Bolt M10 X 1,50 X 30Mm Cl8.8 Rt	7
43	5024010039-5	Smooth Washer Ø26,2 X Ø44 X 4,75Mm	1
44	6020310227-8	Screw Type A3 5/8" X 2.3/4" 18F Unf1A Gr2 Rp	4
45	6020317430-9	Hexagonal Head Bolt M20 X 2,50 X 100Mm Cl8.8 Rp	5
46	6020310660-5	Pin Ø28 x 105mm	2
47	6020010450-4	Smooth Washer M33 Ø31,00 x Ø56,00 x 4,00mm (DIN 125A)	2
48	6020310188-3	Hexagonal Head Bolt M20 X 2,50 X 65Mm Cl8.8 Rp	5
49	5268010867-6	Belt Stretcher 230mm	1
50	6020312506-5	Hexagonal Head Bolt M20 X 2,50 X 160Mm Cl8.8 Rp	1
51	6020310595-1	French Head Pin Ø1" X 105mm	1
52	6020390293-2	Lock Ø5,75 X 40Mm	3
53	6020310795-4	Self-Locking Nut With Nylon 1.1/4" 12F Unf Gr5 Ch.1.7/8" H.33,00Mm	1
54	6020015985-6	Smooth Washer M16 (Ø17 x Ø30 x 3mm) Standart DIN 125	4
55	6020310574-9	French Head Bolt M16 X 2,00 X 90Mm Cl8.8 Rp	4
56	6020050790-0	Cardan Cra 353Tr X 353Pi X 800Tb With Cp (Stu)	1
57	6020310837-3	Self-Locking Nut With Nylon M20 X 2,50 Ma Cl8 Ch.30Mm H.18,70Mm	2
*58	5252010120-9	Limiter Height Hitch	1
*59	5530018139-1	Depth Wheel W/Bearing	1

• Cut Adjustment Ski

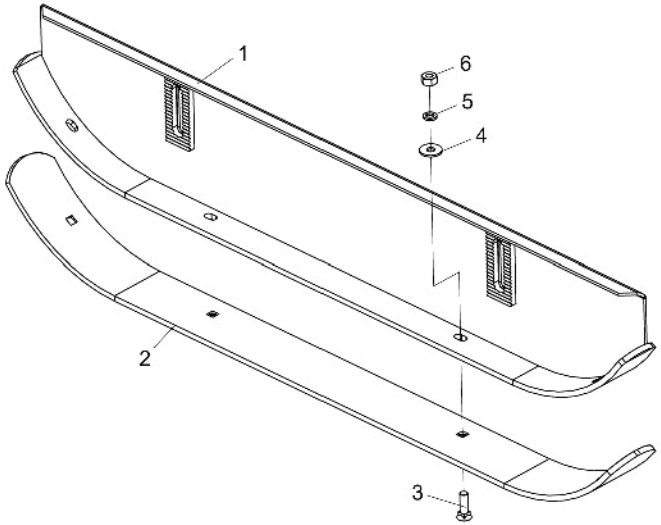

Item	Code	Product description	All
1	5522010061-7	Cutting Adjustment Ski	1
2	5040120729-2	Bar Of 102 X 1435 X 9,50Mm	1
3	6020310232-4	Screw Type A3 1/2" X 1.3/4" 12F Gr2 Rp	4
4	5024010068-9	Smooth Washer Ø13,3 X Ø35,5 X 3,00Mm	4
5	6020010410-5	Pressure Washer 1/2" Media Industry	4
6	6020310754-7	Hexagonal Nut 1/2" 12F W Gr5 Ch.7/8" Height 12,00Mm	4

• Transmission Box (BPN)

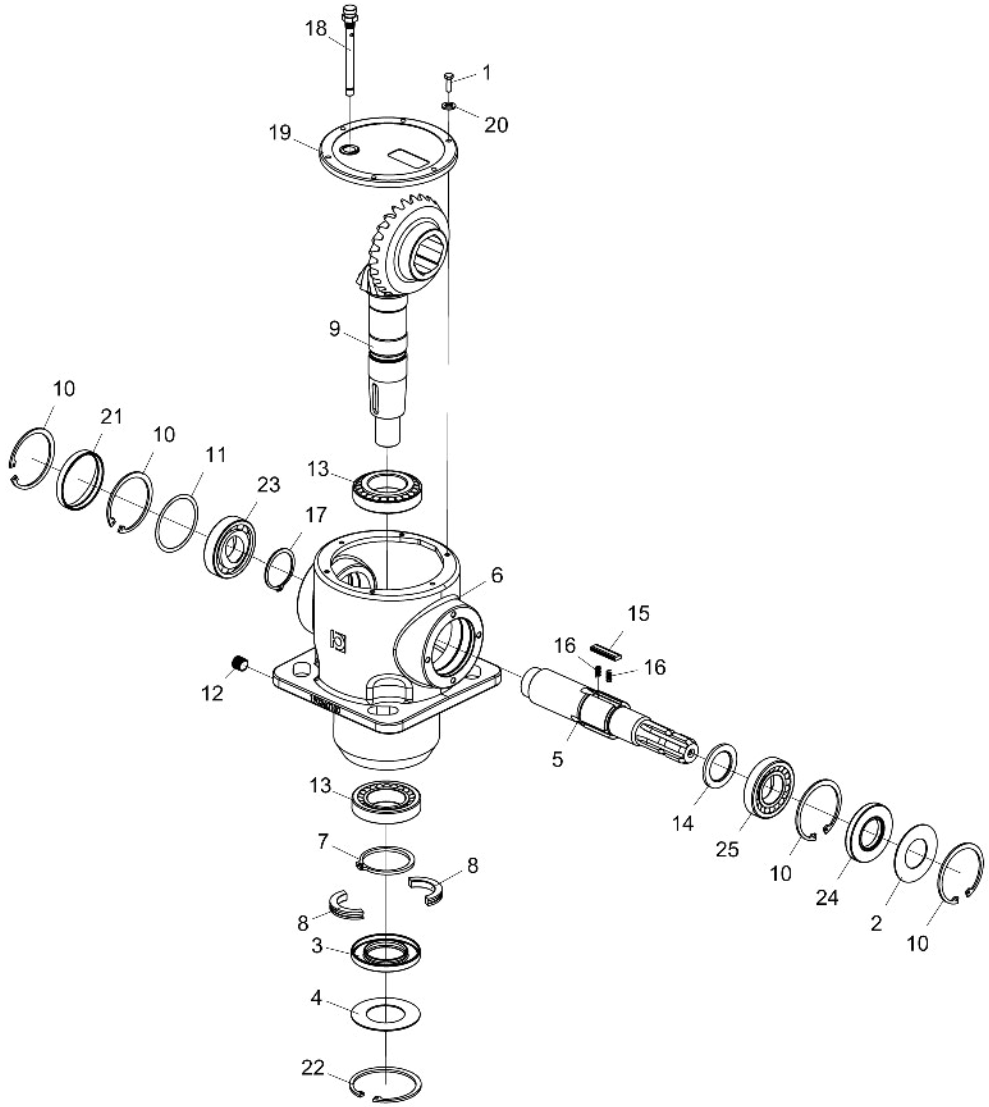

Item	Code	Product description	All
1	6020310270-7	Hexagonal Head Bolt M6 x 20mm	6
2	6020072030-2	Protection Disc Ø41 X Ø79,5 X 1,6	1
3	6020350950-5	Retainer Ø50,00 X Ø90,00 X 10,00Mm	1
4	6020072029-9	Deflector Ø50,5 X Ø90 X 1,6	1
5	6020090674-0	Shaft Xy Box 3068 Mont."R"	1
6	6020058143-4	Spare Housing	1
7	6020015906-6	Elastic Ring For Shaft E-65 X 4,0	1
8	6020015904-0	Ring Ø46 X Ø65 X 10	2
9	6020058134-5	Crown Z=25 - With Free Rotating/ Helical Pinion Z=13/Cx.3068	1
10	6020015907-4	Elastic Ring For Hole I-80 X 2,5	4
11	6020058142-6	Wedge Spacing Ø69,3 X Ø79,7 X 0,4	1
12	6020030755-3	Plug 3/8"	1
13	6020350951-3	Bearing 30208	2
14	6020015910-4	Washer	1
15	6020058144-2	Special Cotter 5 X 13 X 44	3
16	6020251706-7	Spring 3,8 X 4,8	6
17	6020015905-8	Elastic Ring For Shaft E-50 X 2,0	1
18	6020350948-3	Vent With Level Stick 3/8" Gas Conic	1
19	6020395049-0	Cast Cover For Hopper 3068	1
20	6020015909-0	Pressure Washer M6	6
21	6020395050-3	Cover Ø80 X 10	1
22	6020015908-2	Elastic Ring For Hole I-90 X 3,0	1
23	6020350952-1	Bearing 6208	1
24	6020350949-1	Retainer	1
25	6020350953-0	Bearing 30210	1

• Transmision Box (Comer)

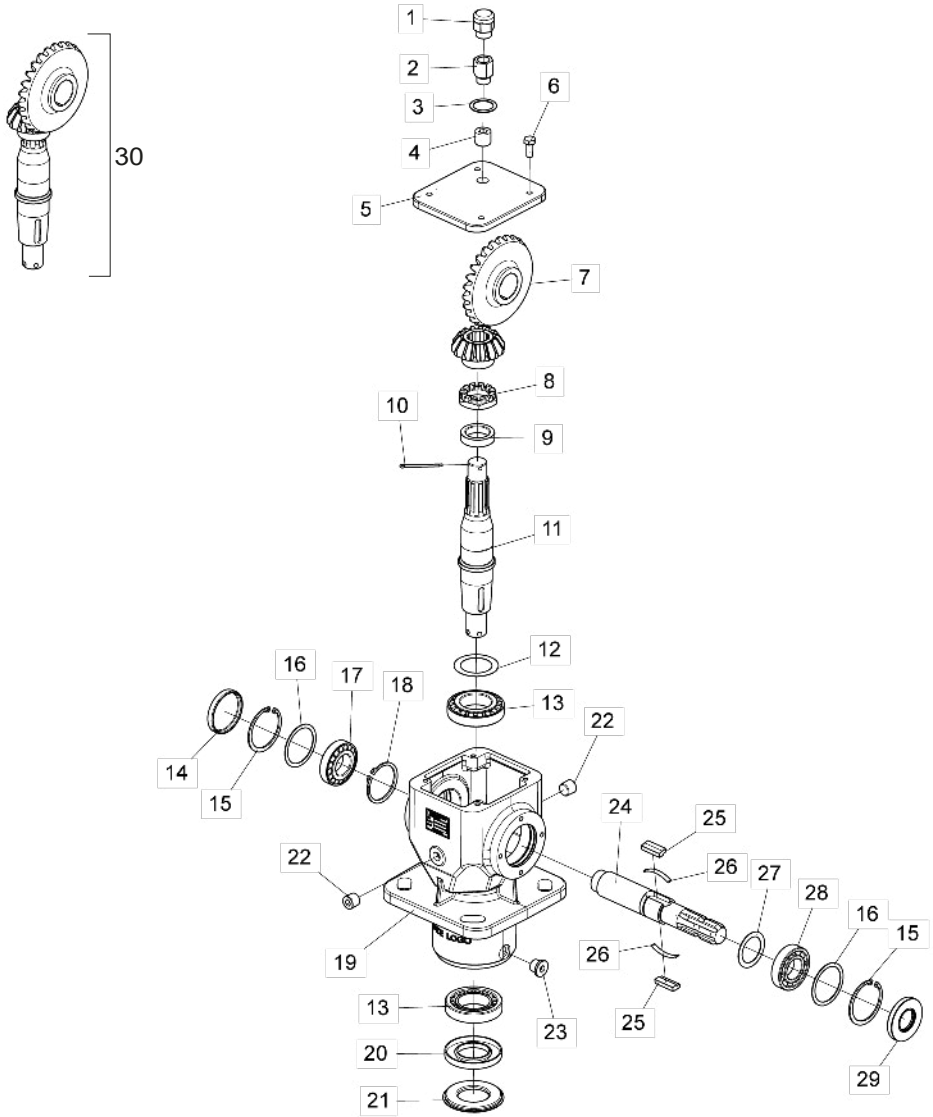

Item	Code	Product description	All
1	6020350992-0	Respire 1/2"BSP (Comer 8.6.7.00269)	1
2	6020310967-1	Protractor 1/2"BSP (Comer 8.6.0.01113)	1
3	6020059228-2	Shim 1/2"BSP 21.46x28x1 (Comer 8.3.3.01114)	1
4	6020030858-4	Plug for Allen Wrench 1/2" BSP (Comer 8.6.6.00088)	1
5	6020395146-1	Transmission Box Cover - Comer (0.140.1302.00)	1
6	6020311269-9	Hexagonal Head Bolt M8 X 1,25 X 20Mm Cl8.8 Rt	4
7	6020059223-1	Crown M5.64 Z27 (Comer 0.140.6010.00) / Crown M5.64 Z14 (0.140.5010.00) Output Shaft (0.140.3007.00)	1
8	6020310965-5	Castle Nut W/Crown M30 x 1,5mm	1
9	6020095888-0	Espacing 30.3x43x10.5 (Comer 0.132.7109.00)	1
10	6020059229-0	Cotterpin M4 x 55mm (Comer 8.4.7.01111)	1
11	6020095890-2	Output Shaft (Comer 0.140.3009.00)	1
12	6020059225-8	Shim 50.3x70.3 (Comer 0.712.7500.00)	1
13	6020350054-0	Bearing 30210	2
14	6020395145-3	Cover Ø72 x 10mm (Comer 8.7.0.00744)	1
15	6020016003-0	Elastic Ring I75 x 2,5mm (Comer 8.5.2.00131)	2
16	6020059226-6	Shim 60.3x71.7 (Comer 0.248.7500.00)	2
17	6020350080-0	Bearing 30207	1
18	6020016004-8	Elastic Ring E40 x 1,8mm (Comer 8.5.1.00712)	1
19	6020061257-7	Machined Housing (Comer 0.140.0501.00)	1
20	6020350991-2	Retainer 50x90x10 (Comer 8.7.1.01107)	1
21	6020395147-0	Lower Protection Cover (Comer 0.139.7100.00)	1
22	6020030859-2	Plug for Allen Wrench 3/8"BSP	2
23	6020030860-6	Magnetic Plug for Allen Wrench 3/8"BSP (Comer 9510.106.025)	1
24	6020096139-3	Input Shaft 3/8 Z6 (Comer 0.140.2010.00)	1
25	6020059227-4	Cutter 13 x 7 x 31mm (Comer 0.267.7109.00)	2
26	6020251948-5	Cutter Lock Spring	2
27	6020059224-0	Shim 48. 0x35.3x1 (Comer 0.313.7000.00)	1
28	6020350022-2	Bearing 6207-Z	1
29	6020350990-4	Retainer NBR 35x72x10 (Comer 8.7.1.02545)	1
		Replacement Set (Shaft / Crown / Pinion)	
30	5528011159-6	Brushcutter Transmission Cx Replacement System (Comer)	-

• Complete Blade Hub

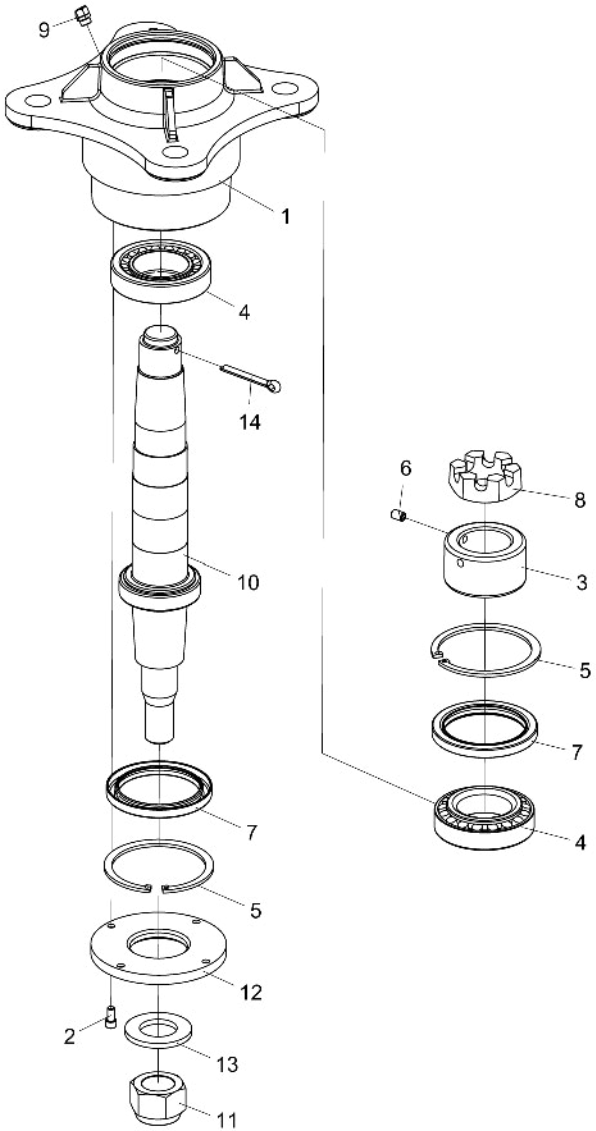

Item	Code	Product description	All
1	5204010288-4	Spare Blades Hub	1
2	6020310099-2	Allen Bolt C/C 1/4" X 1/2" 20F Unc1A Cl12.9 Rt (Phosphated)	4
3	5456030008-8	Nut R.048,7Mm 14Fpp Lock Of The Cube	1
4	6020350056-7	Bearing 32210	2
5	6020010292-7	Retaining Ring I-95	2
6	6020310096-8	Allen Bolt S/C 5/16" X 1/2" 18F Unc1A Cl12.9 Rt (Phosphated)	1
7	6020350266-7	Retainer Ø73,50 X Ø95,00 X 9,00Mm	2
8	5456020005-9	Nut 1.1/2" 14F	1
9	6020130110-9	Grease Fitting 1/8"	1
10	5232012324-0	Small Blades Shaft	1
11	6020310810-1	Self-Locking Nut With Nylon 1.1/4" 12F Unf Gr5 Ch.1.7/8"	1
12	5538010080-0	Hub Cover Ø52 X Ø122 X 9,50Mm	1
13	6020010453-9	Smooth Washer M33 Ø34,00 X Ø60,00 X 5,00mm (Din 125A)	1
14	6020050116-3	Cotterpin 1/4" X 2"	1

• Complete Chains Protections

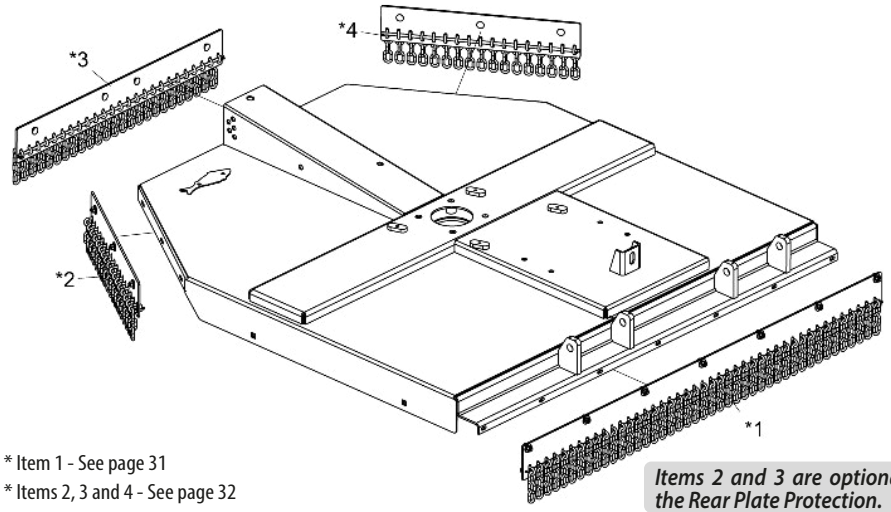

* Item 1 - See page 31
* Items 2, 3 and 4 - See page 32

Items 2 and 3 are optional, and replace the Rear Plate Protection.

Item	Code	Product description	RP/RPU 1300	RP/RPU 1500	RP/RPU 1700
*1	5464010636-3	Complete Front Chain Protection 1300	1		
*1	5464010635-5	Complete Front Chain Protection 1500		1	
*1	5464010616-9	Complete Front Chain Protection 1700			1
*2	5464010637-1	Complete Lateral Rear Protection 1300	1		
*2	5464010634-7	Complete Lateral Rear Protection 1500		1	
*2	5464010615-0	Complete Lateral Rear Protection 1700			1
*3	5464010637-1	Complete Lateral Rear Protection 1300	1		
*3	5464010634-7	Complete Lateral Rear Protection 1500		1	
*3	5464010614-2	Complete Lateral Rear Protection 1700			1
*4	5464010637-1	Complete Lateral Rear Protection 1300	1		
*4	5464010634-7	Complete Lateral Rear Protection 1500		1	
*4	5464010615-0	Complete Lateral Rear Protection 1700			1

• Complete Front Protection

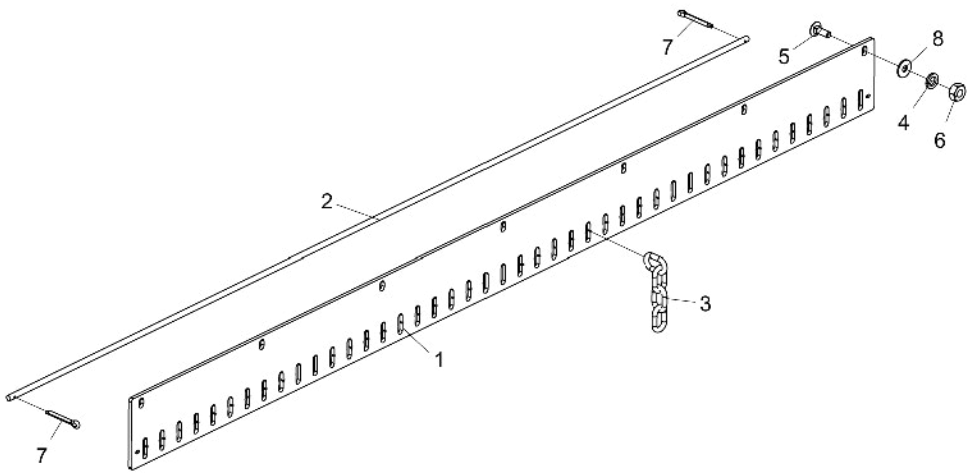

Item	Code	Product description	All	RP/RPU 1300	RP/RPU 1500	RP/RPU 1700
1	5136018761-0	Rear Suport Plate 1380mm		1		
1	5136018747-4	Front Suport Plate 1550mm			1	
1	5136018670-2	Front Suport Plate 1745mm				1
2	5040010986-6	Round Bar Ø3/8" X 1375mm		1		
2	5040010984-0	Round Bar Ø3/8" X 1540mm			1	
2	5040010965-3	Round Bar Ø3/8" X 1740mm				1
3	6020058091-8	Protection Chain (4 Links)		34	38	43
4	6020010394-0	Pressure Washer M10 Media		6	6	7
5	6020317544-5	French Head Bolt M10 X 1,50 X 30Mm Cl8.8 Rt		6	6	7
6	6020310822-5	Hexagonal Nut M10 X 1,50 Ma Cl8 Ch.17Mm H.8,00Mm		6	6	7
7	6020050101-5	Cotterpin 1/8" X 1"	2			
8	6020010443-1	Smooth Washer M10 Ø10,50XØ30,00X2,50mm(DIN 9021)		6	6	7

• Complete Rear Lateral Protection

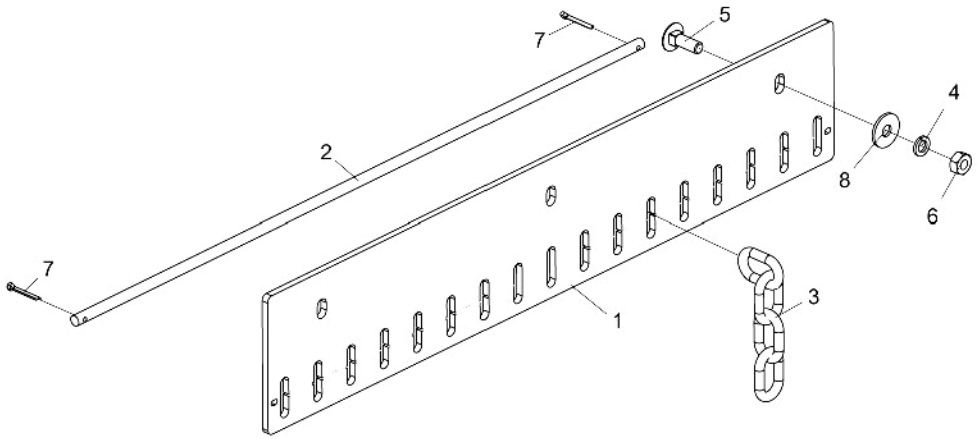

Item	Code	Product description	All	RP/RPU 1300	RP/RPU 1500	RP/RPU 1700
1	5136018668-0	Lateral Rear Protection PLate 680mm				1
1	5136018748-2	Rear Support Plate 600mm			1	
1	5136018760-1	Rear Support Plate 485mm		1		
2	5040010966-1	Round Bar Ø3/8" X 680mm				1
2	5040010983-1	Round Bar Ø3/8" X 600mm			1	
2	5040010985-8	Round Bar Ø3/8" X 480mm		1		
3	6020058091-8	Protection Chain (4 Links)		12	15	17
4	6020010394-0	Pressure Washer M10 Media		2	3	3
5	6020317544-5	French Head Bolt M10 X 1,50 X 30Mm Cl8.8 Rt		2	3	3
6	6020310822-5	Hexagonal Nut M10 X 1,50 Ma Cl8 Ch.17Mm H.8,00Mm		2	3	3
7	6020050101-5	Cotterpin 1/8" X 1"	2			
8	6020010443-1	Smooth Washer M10 Ø10,50XØ30,00X2,50mm(DIN 9021)		2	3	3

• Complete Rear Central Protection

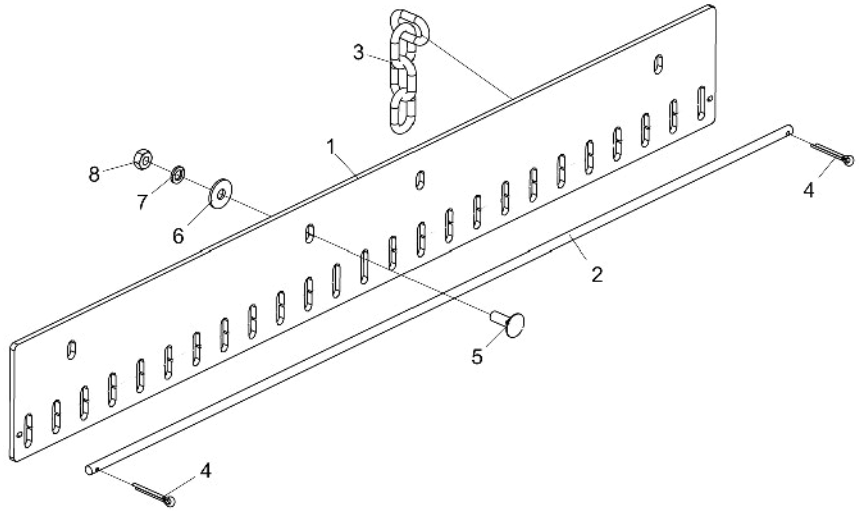

Item	Code	Product description	All	RP/RPU 1300	RP/RPU 1500	RP/RPU 1700
1	5136018760-1	Rear Support Plate 485mm		1		
1	5136018748-2	Rear Support Plate 600mm			1	
1	5136018669-9	Central Rear Protection Plate 1000mm				1
2	5040010985-8	Round Bar Ø3/8" X 480mm		1		
2	5040010983-1	Round Bar Ø3/8" X 600mm			1	
2	5040010967-0	Round Bar 3/8" X 1000mm				1
3	6020058091-8	Protection Chain (4 Links)		12	15	25
4	6020050101-5	Cotterpin 1/8" X 1"	2			
5	6020317544-5	French Head Bolt M10 X 1,50 X 30Mm Cl8.8 Rt		2	3	4
6	6020010443-1	Smooth Washer M10 Ø10,50XØ30,00X2,50mm(DIN 9021)		2	3	4
7	6020010394-0	Pressure Washer M10 Media		2	3	4
8	6020310822-5	Hexagonal Nut M10 X 1,50 Ma Cl8 Ch.17Mm H.8,00Mm		2	3	4

• Limiter Height Hitch

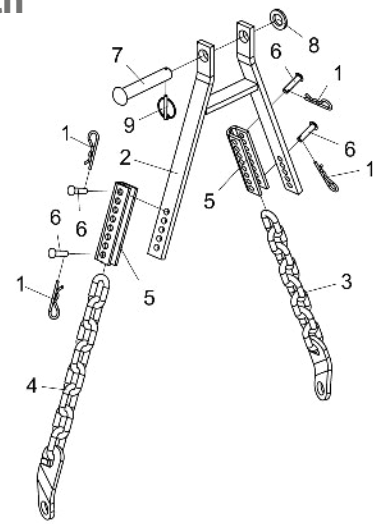

Item	Code	Product description	All
1	6020390308-4	Lock Nma - Type "R" Ø4,5 X 80Mm	4
2	5252010009-1	Limiter Height Hitch	1
3	5192040002-0	Right Chain Of Drawbar W/08 Elos	1
4	5192040003-9	Left Chain Of Drawbar W/08 Elos	1
5	5530080033-4	Support "U" Of Hitch	2
6	6020311237-0	French Head Pin Ø11,2 X 42Mm	4
7	6020310866-7	French Head Pin 1"x 140mm	1
8	5024010039-5	Smooth Washer Ø26,2 X Ø44 X 4,75Mm	1
9	6020390301-7	Lock Ø5,75 X 50Mm	1

• Depth Wheel W/Bearing

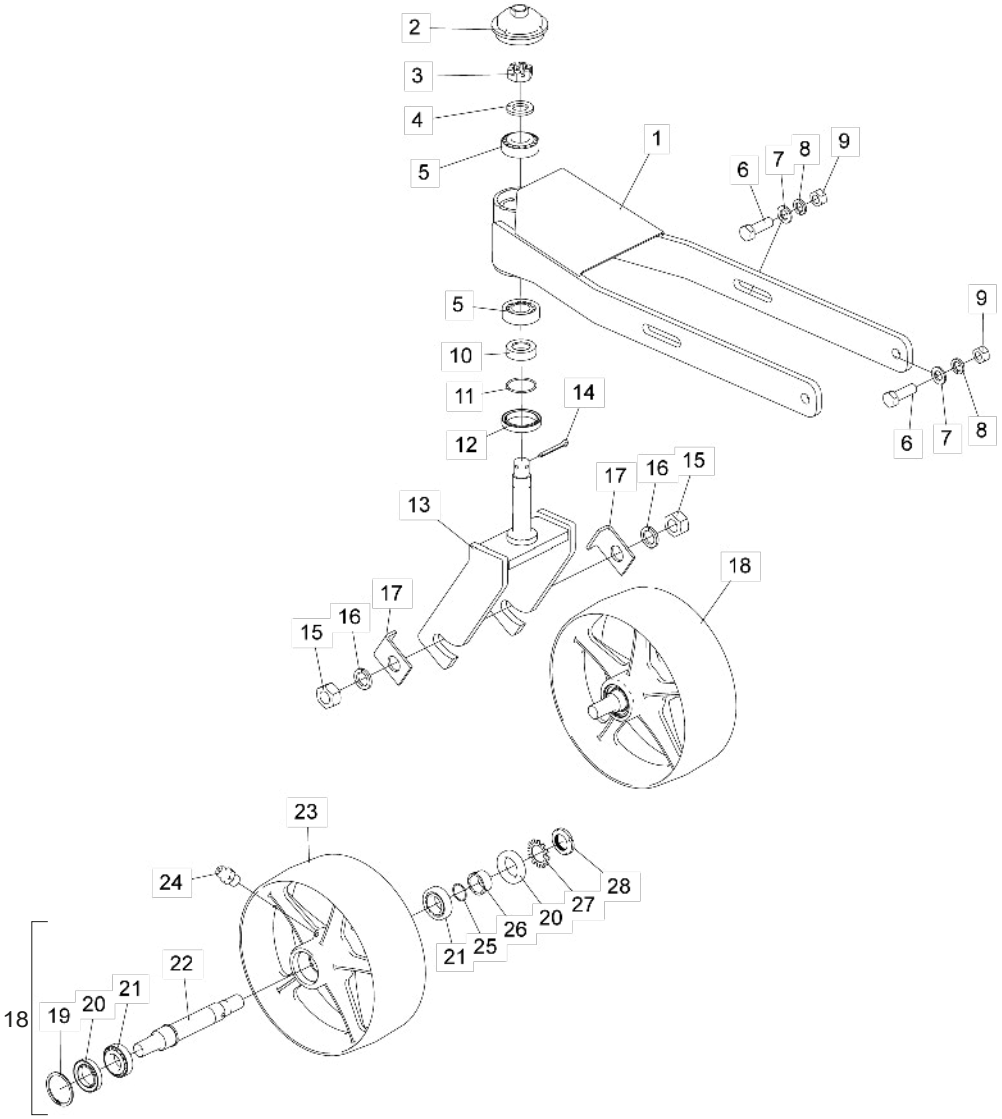

Item	Code	Product description	All
1	5530018140-5	Height Control Support (Wheel / Bearing)	1
2	5096010053-8	Wheel Hub Cap	1
3	6020310791-1	Nut M24 X 2,00 Mb Cl8 Ch.36mm H.19,00mm Without Crown	1
4	5024010039-5	Smooth Washer Ø26,2 X Ø44 X 4,75mm	1
5	6020350062-1	Bearing 32206	2
6	6020311210-9	Hexagonal Head Bolt M16 X 2,00 X 50mm Cl8.8 Rt	4
7	6020015985-6	Smooth Washer M16 (Ø17 x Ø30 x 3mm) Standart DIN 125	4
8	6020010124-6	Pressure Washer M16 Media	4
9	6020310818-7	Hexagonal Nut M12 X 1,75 Ma Cl8 Ch.19mm H.10,00mm	4
10	5080012088-5	Support Bushing	1
11	6020016020-0	O'Ring Ø 29,87 X 1,78 - 2025 N 0674-70	1
12	6020350248-9	Retainer Ø50,00 X Ø65,00 X 10,00mm	1
13	5530018141-3	Wheel Support	1
14	6020050116-3	Cotterpin 1/4" X 2"	1
15	6020310457-2	Hexagonal Nut M24 X 3,00 Ma Cl8 Ch.36mm H.19,00mm	2
16	6020010196-3	Pressure Washer M24 Media (	2
17	5136060170-0	Plate Of Wheel Lock	2
18	5498010340-7	Wheel With Mounted Bearing	1
19	6020016019-6	Elastic Ring Din 472 - 56 X 2	1
20	6020351013-9	Retainer Ø35.00 X Ø56,00 X 10.00mm (7452 Br)	2
21	6020350868-1	Bearing 32006Xj (Nsk)	2
22	5232012451-4	Wheel Shaft	1
23	5498010341-5	Machined Wheel (Bearing)	1
24	6020130100-1	Grease Fitting 1/4"	1
25	6020016018-8	O'Ring Ø 26,7 X 1,78 - 2023 N 0674-70	1
26	5080012086-9	Support Bushing	1
27	6020016011-0	Lock Washer Mb6 Ø30mm	1
28	6020311296-6	Nut Km6 M30 X 1,5mm	1

• Stickers

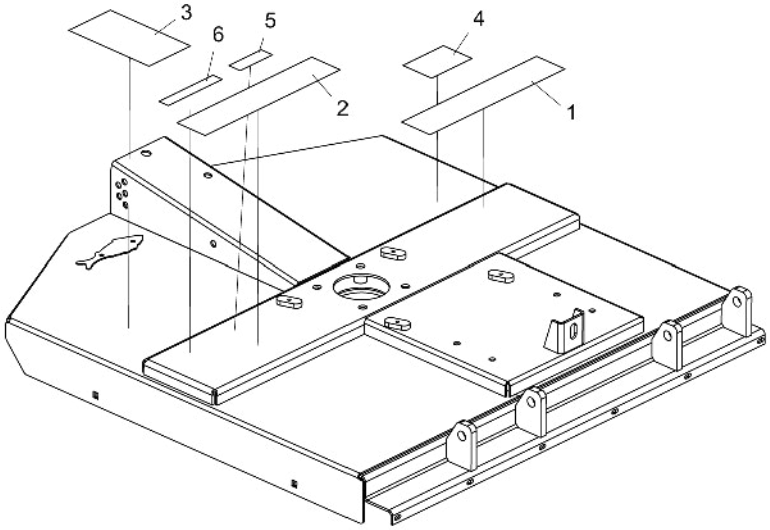

Item	Code	Product description	All	RP 1300	RP 1500	RP 1700	RPU 1300	RPU 1500	RPU 1700
1	6020071063-3	Sticker Rp-1300 (500 X 100Mm)		1					
1	6020072245-3	Sticker RP-1500 (500 x 100mm)			1				
1	6020071066-8	Sticker Rp-1700 (500 X 100Mm)				1			
1	6020071068-4	Sticker Rpu-1300 (500 X 100Mm)					1		
1	6020071070-6	Sticker Rpu-1500 (500 X 100Mm)						1	
1	6020071072-2	Sticker Rpu-1700 (500 X 100Mm)							1
2	6020071029-3	Sticker Baldan (500 X 100Mm)	1						
3	5206010102-7	Sticker Rotary Cutter Warning	1						
4	5206010294-5	Sticker Remove The Plug Before Place Rotary Cutter	1						
5	6020070894-9	Sticker Attention "Rotating Cardan" (45 X 130Mm)	1						
6	5206010026-8	Sticker Level Of Oil Check (Rotary Cutter)	1						

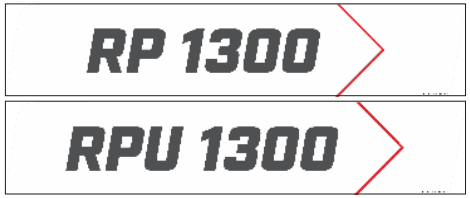

Item 1

Item 2

Item 3

Item 4

Item 5

Item 6

BALDAN

Avenida Baldan, 1500
Nova Matão
15.993-900
Matão/SP - Brasil
sac@baldan.com.br
export@baldan.com.br

+55 16 3221 6500
baldan.com.br