Parts Catalog

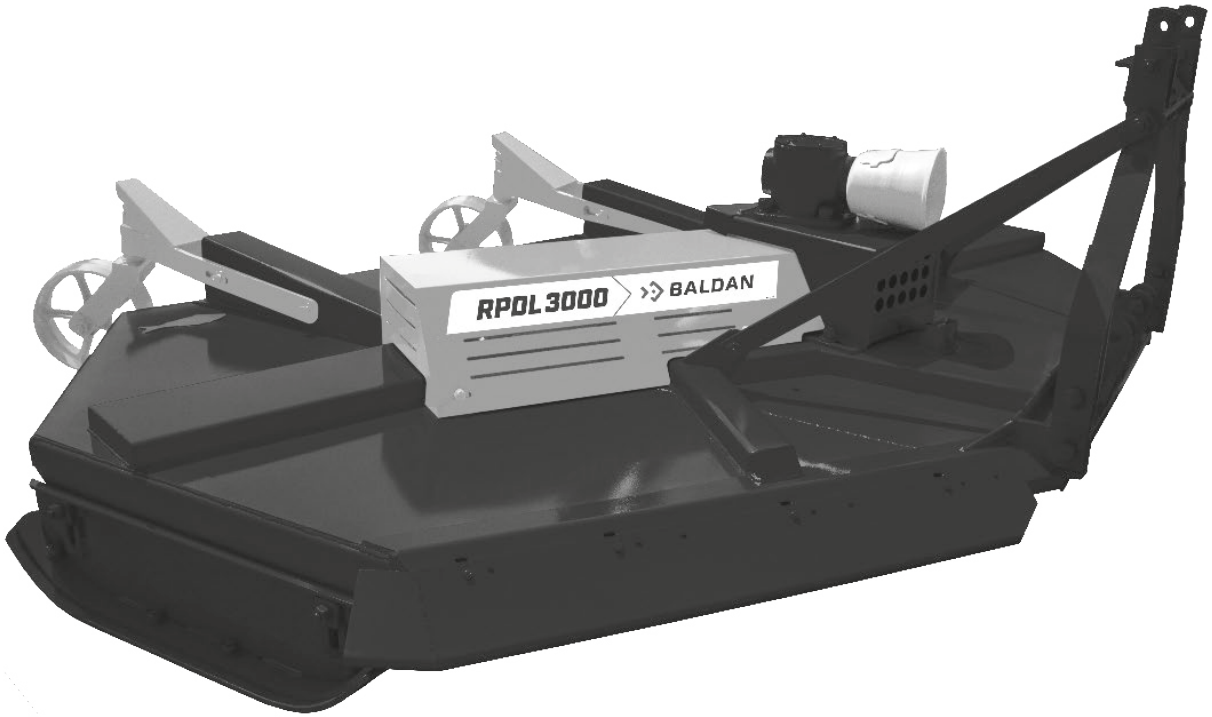

RPDL 2250/2700/3000

Central and Lateral Mounted Rotary Cutter

BALDAN

Index

RPDL 2250 W/Support 4
Table RPDL 2250 W/Support 5
RPDL 2250 W/Rotating Tray 6
Table RPDL 2250 W/Rotating Tray 7
RPDL 2700 W/Support 8
Table RPDL 2700 W/Support 9
RPDL 2700 W/Rotating Tray 10
Table RPDL 2700 W/Rotating Tray 11
RPDL 3000 W/Support 12
Table RPDL 3000 W/Support 13
RPDL 3000 W/Rotating Tray 14
Table RPDL 3000 W/Rotating Tray 15
Complete Adjustment Ski 16
Transmision Box (BPN) 17
Transmision Box (Comer) 18
Complete Blades Hub 19
Complete Large Lateral Protection 20
Complete Small Lateral Protection 20
Chains Protections 21
Complete (Chain) Right Front Lateral Protection 21
Complete (Chain) Central Front Lateral Protection 22
Complete (Chain) Left Front Lateral Protection 22
Complete (Chain) Central Rear Protection 23
Complete (Chain) Right Rear lateral Protection 23
Complete Depth Wheel 24
Stickers 25

• RPDL 2250 W/Support

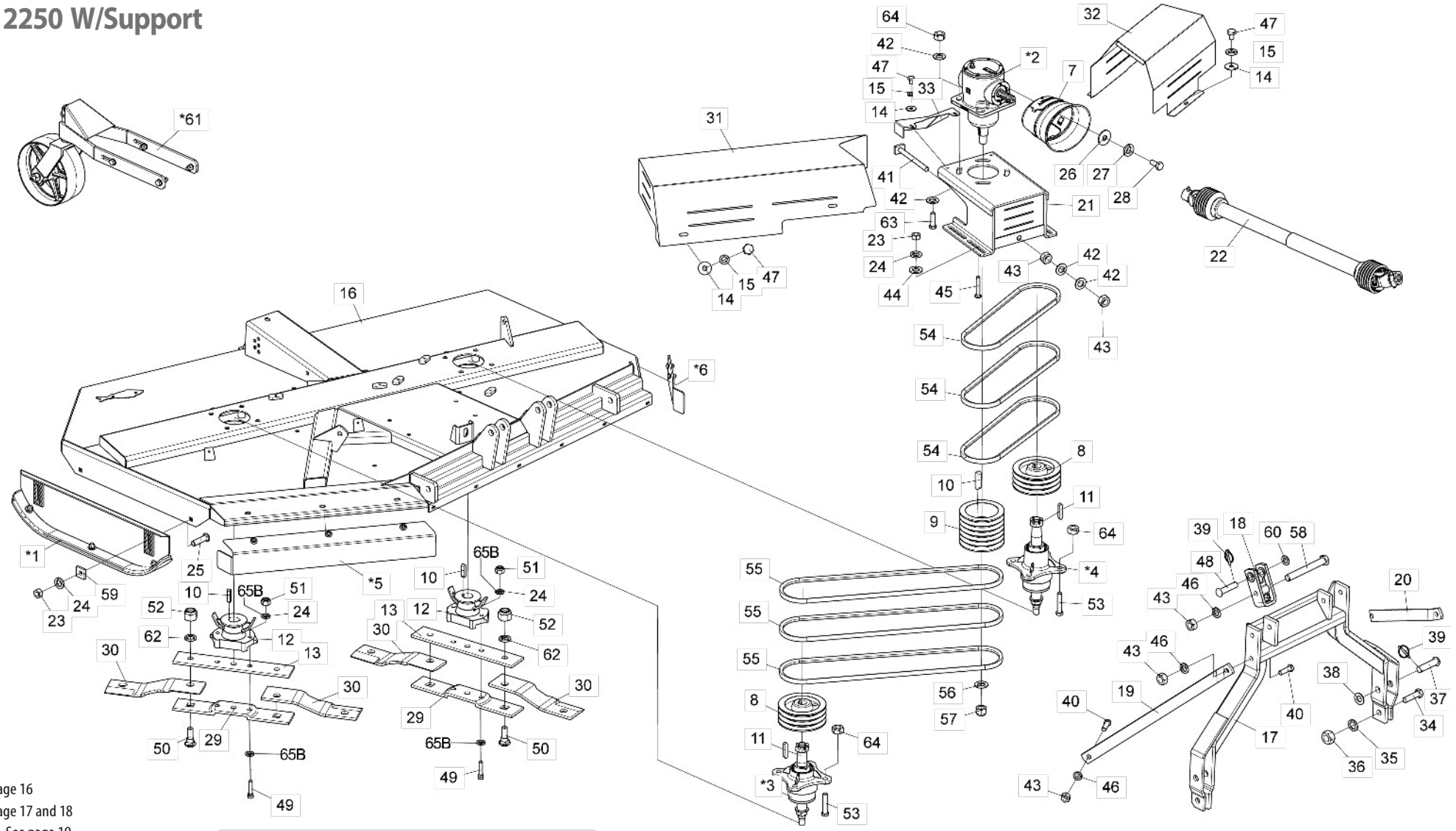

* Item 1 - See page 16
* Item 2 - See page 17 and 18
* Items 3 and 4 - See page 19
* Items 5 and 6 - See page 20
* Item 60 - See page 24

For the purpose of replacing internal parts of the Multiplier Transmission Box (2), check the manufacturer's name on the box.*

Note: Items 13A,24A,29A,49A and 51A, use until 10/2023, and items 13B,24B,29B,49B,51B and 65B use from 11/2023.

• Table RPDL 2250 W/Support

Item	Code	Product description	All
*1	5522010063-3	Complete Adjustment Ski	2
*2	6020057992-8	Transmision Box (BPN)	1
*2	6020059220-7	Transmission Box (COMER)	1
*3	5204010545-0	Complete Small Blade Hub	1
*4	5204010546-8	Complete Left Blades Hub	1
*5	5464010658-4	Complete Lateral Rear Protection 950mm	1
*6	5464010653-3	Complete Lateral Rear Protection 225mm	1
7	6020310601-0	Protection Kit	1
8	5448010001-0	Pulley 3 Canals Hub	2
9	5448010036-3	Pulley 6 Canals	1
10	6020058892-7	Cotter Sq.3/8" x 44mm	3
11	6020058893-5	Cotter Sq.3/8" x 52mm	2
12	5368010141-4	Fixation Bearing Of Blades With Scraper	2
13A	5040140015-7	Upper Blades Support Bar	2
13B	5040011138-0	Upper Blades Support Bar	2
14	6020010443-1	Smooth Washer M10 Ø10,50XØ30,00X2,50mm(DIN 9021)	9
15	6020010394-0	Pressure Washer M10 Media	9
16	5092010607-0	Blades Protection Box	1
17	5084010187-5	Hitch Drawbar	1
18	6010602560-9	Hitch 190mm(Category 2)	2
19	5530017771-8	Small Support of 3rd Hitch Point Plate	1
20	5530017926-5	Large Support of 3rd Hitch Point Plate	1
21	5530017728-9	Box Fixation Support	1
22	6020050788-9	Cardan Crar 353Tr X 353Pi X 800Tb With Cp (Stu)	1
23	6020310818-7	Hexagonal Nut M16 X 2,00 Ma Cl8 Ch.24mm H.13,00mm	8
24A	6020010124-6	Pressure Washer M16 Media	12
24B	6020010124-6	Pressure Washer M16 Media	8
25	6020310938-8	French Head Bolt M16 x 2,00 x 60mm CL8.8 RP	4
26	6020010448-2	Smooth Washer M8 Ø8,40XØ24,00X2,00mm(DIN 9021)	4
27	6020010004-5	Pressure Washer M8 Media	4
28	6020311269-9	Hexagonal Head Bolt M8 X 1,25 X 20mm Cl8.8 Rt	4
29A	5040140016-5	Lower Blades Support Bar	2
29B	5040011139-9	Lower Blades Support Bar	2
30	4625264811-9	Blade 451 X 100 X 12mm Double Edge	4
31	5464010646-0	Complete Right Protection of Pulley	1
32	5464010647-9	Complete Left Protection of Pulley	1
33	5530016039-4	Protection Support (Rpdl-3000)	1
34	6020310935-3	Hexagonal Head Bolt M24 X 3,00 X 90mm CL8.8 RP	2
35	6020010196-3	Pressure Washer M24 Media (	2
36	6020310457-2	Hexagonal Nut M24 X 3,00 Ma Cl8 Ch.36mm H.19,00mm	2
37	6020310660-5	Pin Ø28 x 105mm	2
38	6020010450-4	Smooth Washer M33 Ø31,00 x Ø56,00 x 4,00mm (DIN 125A)	2
39	6020390293-2	Lock Ø5,75 X 40mm	3
40	6020310188-3	Hexagonal Head Bolt M20 X 2,50 X 65mm Cl8.8 Rp	4
41	5268010867-6	Belt Stretcher 230mm	1
42	6020015986-4	Smooth Washer M20 (Ø21 x Ø37 x 3mm) Standart DIN 125	10
43	6020311265-6	Hexagonal Nut M20 X 2,50 Ma Cl8 Ch.30mm H.16,00mm	8
44	6020015985-6	Smooth Washer M16 (Ø17 x Ø30 x 3mm) Standart DIN 125	4

Item	Code	Product description	All
45	6020310937-0	French Head Bolt M16 X 2,00 X 100mm CL8.8 RP	4
46	6020010403-2	Pressure Washer M20 Media	6
47	6020310299-5	Hexagonal Head Bolt M10 X 1,50 X 15mm Cl8.8 Rt	9
48	6020310595-1	French Head Pin Ø1" X 105mm	1
49A	6020317617-4	Hexagonal Head Bolt M16 X 1,50 X 75mm Cl8.8 Rp Especial	4
49B	6020317861-4	Hexagon Head Screw M16 X 1.50 X 80mm CL8.8 RP	4
50	6020310934-5	French Head Bolt M24 x 3,00 x 80mm CL8.8 Special	4
51A	6020317523-2	Self-Locking Nut With Nylon M16 X 1,50 Mb Cl8 Ch.24mm H.16,00mm	4
51B	6020317434-1	Hex Nut M16 X 1.50 MB CL8 CH.24mm HLT.13mm	4
52	6020310338-0	Self-Locking Nut With Nylon M24 X 3,00 Ma Cl8 Ch.36mm H.15,00mm(White Galnanised)	4
53	6020317624-7	Hexagonal Head Bolt M20 X 1,50 X 100mm Cl8.8 Rp	8
54	6020059203-7	Chain C-60	3
55	6020059204-5	Chain C-87	3
56	6020010453-9	Smooth Washer M33 Ø34,00 X Ø60,00 X 5,00mm (Din 125A)	1
57	6020310795-4	Self-Locking Nut With Nylon 1.1/4" 12F Unf Gr5 Ch.1.7/8" H.33,00mm	1
58	6020312506-5	Hexagonal Head Bolt M20 X 2,50 X 160mm Cl8.8 Rp	2
59	6010601016-4	Small Plate	4
60	6020010441-5	Smooth Washer M24 x Ø26xØ44x4mm	1
*61	5530018139-1	Support Mounted Height Control	1
62	6020010441-5	Smooth Washer M24 x Ø26xØ44x4mm	4
63	6020317623-9	Hexagonal Head Bolt M20 X 1,50 X 65mm Cl8.8 Rp (Bicromatizado)	4
64	6020310848-9	Nut hexagonal Self-locking C/Nylon Low M20 X 1,50 Mb Cl8 Ch30mm Alt22mm	12
65B	6020016250-4	Wedge Lock Washer M16-DIN25201	8

• RPDL 2250 W/Rotating Tray

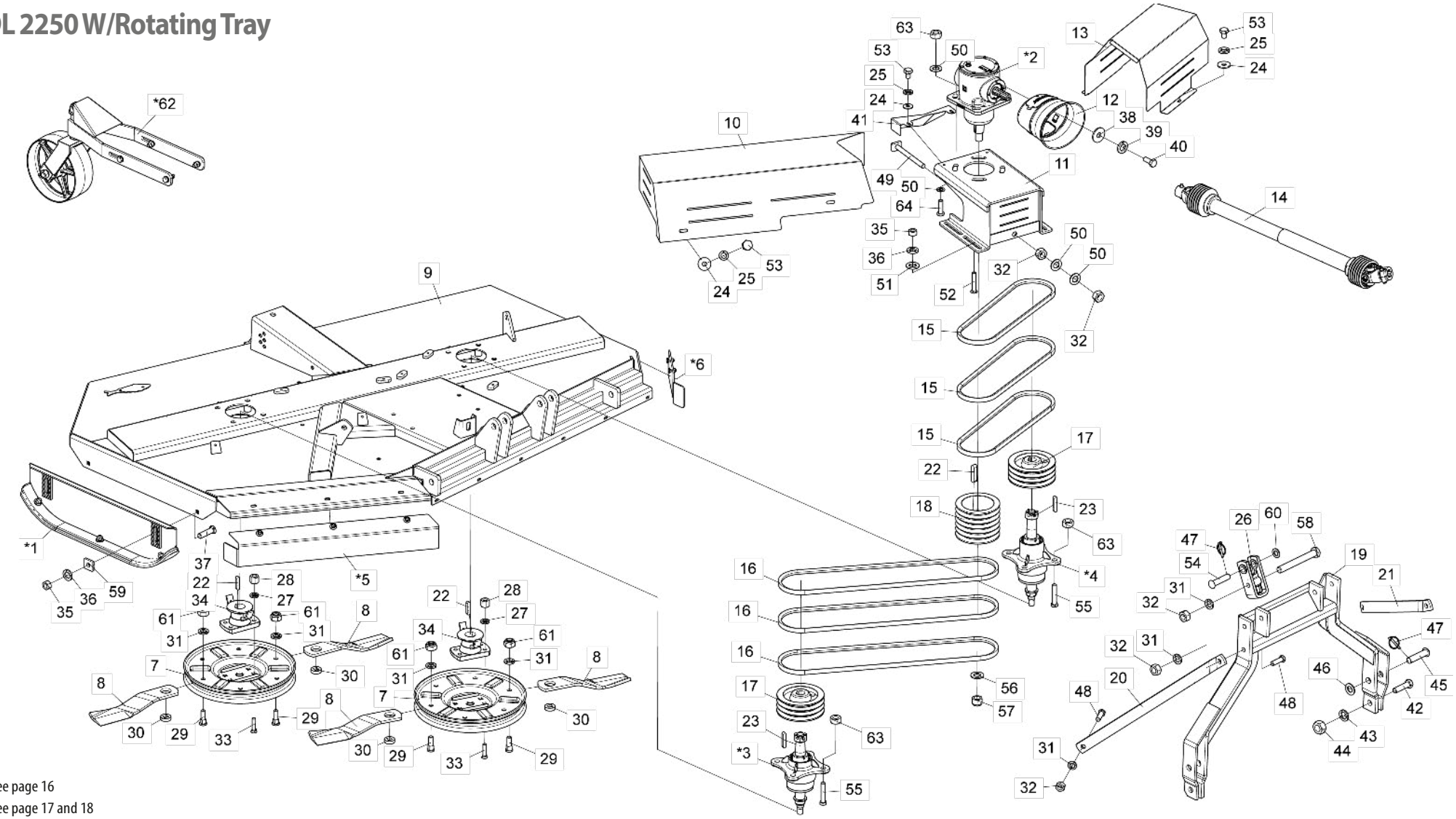

* Item 1 - See page 16
* Item 2 - See page 17 and 18
* Items 3 and 4 - See page 19
* Items 5 and 6 - See page 20
* Item 61 - See pages 24 and 25

For the purpose of replacing internal parts of the Multiplier Transmission Box (2), check the manufacturer's name on the box.*

• Table RPDL 2250 W/Rotating Tray

Item	Code	Product description	All
*1	5522010063-3	Complete Adjustment Ski	2
*2	6020057992-8	Transmision Box (BPN)	1
*2	6020059220-7	Transmission Box (COMER)	1
*3	5204010545-0	Complete Small Blade Hub	1
*4	5204010546-8	Complete Left Blades Hub	1
*5	5464010658-4	Complete Lateral Rear Protection 950mm	1
*6	5464010653-3	Complete Lateral Rear Protection 225mm	1
7	5038020001-2	Rotating Tray	2
8	4625264818-6	Blade 445X3.1/2"X1/2" Single Edge	4
9	5092010607-0	Blades Protection Box	1
10	5464010646-0	Complete Right Protection of Pulley	1
11	5530017728-9	Box Fixation Support	1
12	6020310601-0	Protection Kit	1
13	5464010647-9	Complete Left Protection of Pulley	1
14	6020050788-9	Cardan Crar 353Tr X 353Pi X 800Tb With Cp (Stu)	1
15	6020059203-7	Chain C-60	3
16	6020059204-5	Chain C-87	3
17	5448010001-0	Pulley 3 Canals Hub	2
18	5448010036-3	Pulley 6 Canals	1
19	5084010187-5	Hitch Drawbar	1
20	5530017771-8	Small Support of 3rd Hitch Point Plate	1
21	5530017926-5	Large Support of 3rd Hitch Point Plate	1
22	6020058892-7	Cotter Sq.3/8" x 44mm	2
23	6020058893-5	Cotter Sq.3/8" x 52mm	2
24	6020010443-1	Smooth Washer M10 Ø10,50XØ30,00X2,50mm(DIN 9021)	9
25	6020010394-0	Pressure Washer M10 Media	9
26	6010602560-9	Hitch 190mm(Category 2)	2
27	6020010412-1	Pressure Washer 5/8" Media Industry	8
28	6020310808-0	Double Hexagonal Nut 5/8" 18F Unf Gr5 Ch.15/16" H.21,50mm	8
29	6020310946-9	Round Head Bolt M20 x 2,5 X 65mm CL8.8 RT	4
30	5024070001-5	Smooth Washer Sq.20 X Ø49 X 15,00mm	4
31	6020010403-2	Pressure Washer M20 Media	6
32	6020311265-6	Hexagonal Nut M20 X 2,50 Ma Cl8 Ch.30mm H.16,00mm	8
33	6020310227-8	Screw Type A3 5/8" X 2.3/4" 18F Unf1A Gr2 Rp	8
34	5368010891-5	Tray Fixation Bearing W/Scrapper	2
35	6020310818-7	Hexagonal Nut M16 X 2,00 Ma Cl8 Ch.24mm H.13,00mm	8
36	6020010124-6	Pressure Washer M16 Media	8
37	6020310938-8	French Head Bolt M16 x 2,00 x 60mm CL8.8 RP	4
38	6020010448-2	Smooth Washer M8 Ø8,40XØ24,00X2,00mm(DIN 9021)	4
39	6020010004-5	Pressure Washer M8 Media	4
40	6020311269-9	Hexagonal Head Bolt M8 X 1,25 X 20mm Cl8.8 Rt	4
41	5530016039-4	Protection Support (Rpdl-3000)	1
42	6020310935-3	Hexagonal Head Bolt M24 X 3,00 X 90mm CL8.8 RP	2
43	6020010196-3	Pressure Washer M24 Media (	2
44	6020310457-2	Hexagonal Nut M24 X 3,00 Ma Cl8 Ch.36mm H.19,00mm	2
45	6020310660-5	Pin Ø28 x 105mm	2
46	6020010450-4	Smooth Washer M33 Ø31,00 x Ø56,00 x 4,00mm (DIN 125A)	2

Item	Code	Product description	All
47	6020390293-2	Lock Ø5,75 X 40mm	3
48	6020310188-3	Hexagonal Head Bolt M20 X 2,50 X 65mm Cl8.8 Rp	4
49	5268010867-6	Belt Stretcher 230mm	1
50	6020015986-4	Smooth Washer M20 (Ø21 x Ø37 x 3mm) Standart DIN 125	10
51	6020015985-6	Smooth Washer M16 (Ø17 x Ø30 x 3mm) Standart DIN 125	4
52	6020310937-0	French Head Bolt M16 X 2,00 X 100mm CL8.8 RP	4
53	6020310299-5	Hexagonal Head Bolt M10 X 1,50 X 15mm Cl8.8 Rt	9
54	6020310595-1	French Head Pin Ø1" X 105mm	1
55	6020317624-7	Hexagonal Head Bolt M20 X 1,50 X 100mm Cl8.8 Rp	8
56	6020010453-9	Smooth Washer M33 Ø34,00 X Ø60,00 X 5,00mm (Din 125A)	1
57	6020310795-4	Self-Locking Nut With Nylon 1.1/4" 12F Unf Gr5 Ch.1.7/8" H.33,00mm	1
58	6020312506-5	Hexagonal Head Bolt M20 X 2,50 X 160mm Cl8.8 Rp	2
59	6010601016-4	Small Plate	4
60	6020010441-5	Smooth Washer M24 x Ø26xØ44x4mm	1
61	6020310837-3	Self-Locking Nut With Nylon M20 X 2,50 Ma Cl8 Ch.30mm H.18,70mm	4
*62	5530018139-1	Support Mounted Height Control	1
63	6020310848-9	Nut hexagonal Self-locking C/Nylon Low M20 X 1,50 Mb Cl8 Ch30mm Alt22mm	12
64	6020317623-9	Hexagonal Head Bolt M20 X 1,50 X 65mm Cl8.8 Rp	4

• RPDL 2700 W/Support

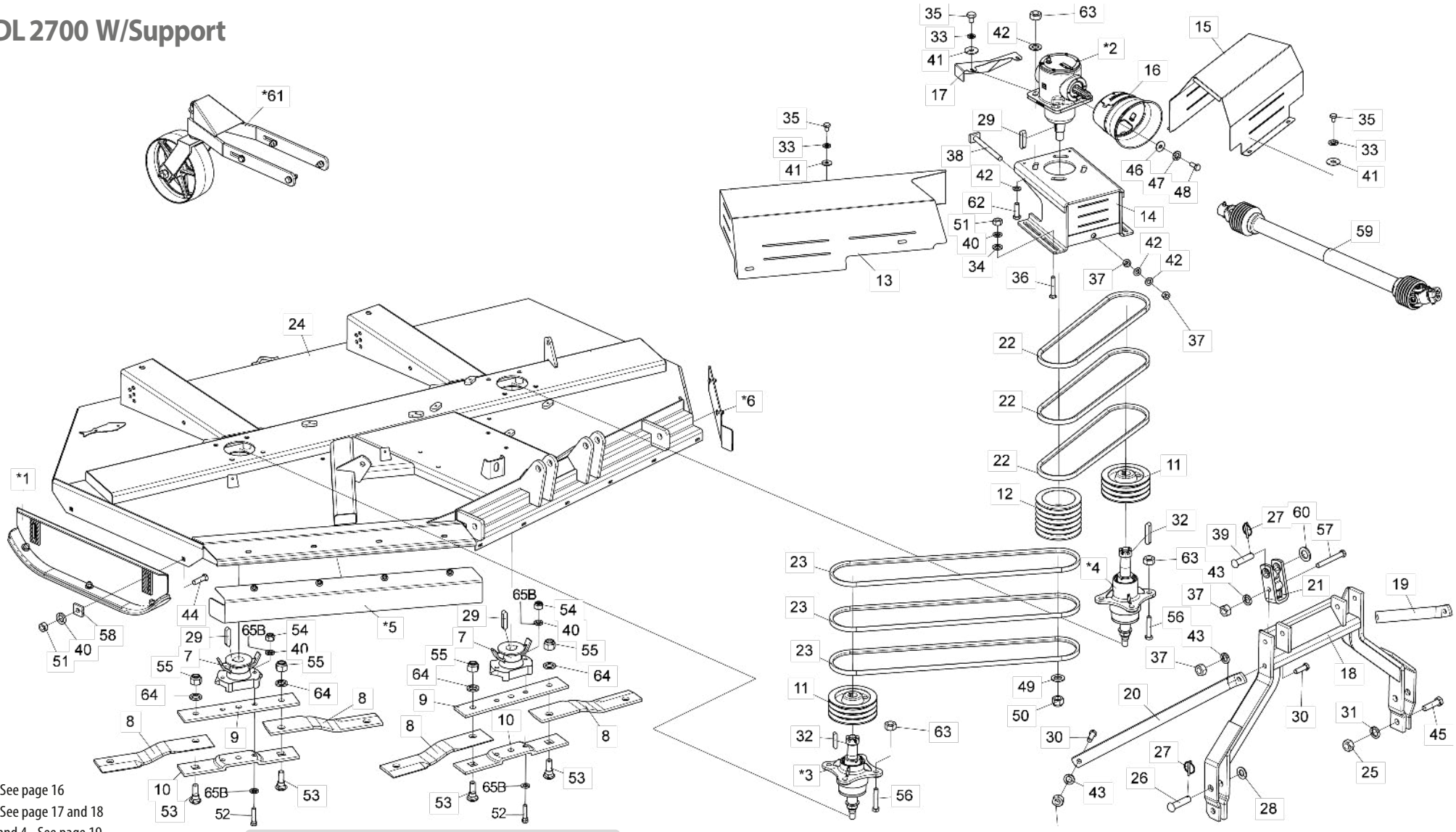

* Item 1 - See page 16
* Item 2 - See page 17 and 18
* Items 3 and 4 - See page 19
* Items 5 and 6 - See page 20
* Item 61 - See pages 24 and 25

For the purpose of replacing internal parts of the Multiplier Transmission Box (2), check the manufacturer's name on the box.*

Note: Items 9A,10A,40A,52A and 54A, use until 10/2023, and items 9B,10B,40B,52B,54B and 65B use from 11/2023.

• Table RPDL 2700 W/Support

Item	Code	Product description	All
*1	5522010063-3	Complete Adjustment Ski	2
*2	6020057992-8	Transmision Box (BPN)	1
*2	6020059220-7	Transmission Box (COMER)	1
*3	5204010545-0	Complete Small Blade Hub	1
*4	5204010546-8	Complete Left Blades Hub	1
*5	5464010656-8	Complete Lateral Rear Protection 1185mm	1
*6	5464010654-1	Complete Lateral Rear Protection 485mm	1
7	5368010141-4	Fixation Bearing Of Blades With Scraper	2
8	4625265611-1	Knife 540 X 100 X 12mm Double Cut Extra Strong Steel	4
9A	5040140015-7	Upper Blades Support Bar	2
9B	5040011138-0	Upper Blades Support Bar	2
10A	5040140016-5	Lower Blades Support Bar	2
10B	5040011139-9	Lower Blades Support Bar	2
11	5448010001-0	Pulley 3 Canals Hub	2
12	5448010036-3	Pulley 6 Canals	1
13	5464010639-8	Complete Right Protection of Pulley	1
14	5530017728-9	Box Fixation Support	1
15	5464010640-1	Complete Left Protection of Pulley	1
16	6020310601-0	Protection Kit	1
17	5530016039-4	Protection Support (Rpdl-3000)	1
18	5084010187-5	Hitch Drawbar	1
19	5530017766-1	Small Support of 3rd Hitch Point Plate	1
20	5530010214-9	Right Support 3rd Point	1
21	6010602560-9	Hitch 190mm(Category 2)	2
22	6020050264-0	Belt C-68	3
23	6020050237-2	Belt C-96	3
24	5092010605-3	Blades Protection Box	1
25	6020310457-2	Hexagonal Nut M24 X 3,00 Ma Cl8 Ch.36mm H.19,00mm	2
26	6020310660-5	Pin Ø28 x 105mm	2
27	6020390293-2	Lock Ø5,75 X 40mm	3
28	6020010450-4	Smooth Washer M33 Ø31,00 x Ø56,00 x 4,00mm (DIN 125A)	2
29	6020058892-7	Cotter Sq.3/8" x 44mm	3
30	6020310188-3	Hexagonal Head Bolt M20 X 2,50 X 65mm Cl8.8 Rp	4
31	6020010196-3	Pressure Washer M24 Media (	2
32	6020058893-5	Cotter Sq.3/8" x 52mm	2
33	6020010394-0	Pressure Washer M10 Media	10
34	6020015985-6	Smooth Washer M16 (Ø17 x Ø30 x 3mm) Standart DIN 125	4
35	6020310299-5	Hexagonal Head Bolt M10 X 1,50 X 15mm Cl8.8 Rt	10
36	6020310937-0	French Head Bolt M16 X 2,00 X 100mm CL8.8 RP	4
37	6020311265-6	Hexagonal Nut M20 X 2,50 Ma Cl8 Ch.30mm H.16,00mm	8
38	5268010867-6	Belt Stretcher 230mm	1
39	6020310595-1	French Head Pin Ø1" X 105mm	1
40A	6020010124-6	Pressure Washer M16 Media	12
40B	6020010124-6	Pressure Washer M16 Media	8
41	6020010443-1	Smooth Washer M10 Ø10,50XØ30,00X2,50mm(DIN 9021)	10
42	6020015986-4	Smooth Washer M20 (Ø21 x Ø37 x 3mm) Standart DIN 125	10
43	6020010403-2	Pressure Washer M20 Media	6
44	6020310938-8	French Head Bolt M16 x 2,00 x 60mm CL8.8 RP	4

Item	Code	Product description	All
45	6020310935-3	Hexagonal Head Bolt M24 X 3,00 X 90mm CL8.8 RP	2
46	6020010448-2	Smooth Washer M8 Ø8,40XØ24,00X2,00mm(DIN 9021)	4
47	6020010004-5	Pressure Washer M8 Media	4
48	6020311269-9	Hexagonal Head Bolt M8 X 1,25 X 20mm Cl8.8 Rt	4
49	6020010453-9	Smooth Washer M33 Ø34,00 X Ø60,00 X 5,00mm (Din 125A)	1
50	6020310795-4	Self-Locking Nut With Nylon 1.1/4" 12F Unf Gr5 Ch.1.7/8" H.33,00mm	1
51	6020310818-7	Hexagonal Nut M16 X 2,00 Ma Cl8 Ch.24mm H.13,00mm	8
52A	6020317617-4	Hexagonal Head Bolt M16 X 1,50 X 75mm Cl8.8 Rp Especial	4
52B	6020317861-4	Hex Head Screw M16 X 1.50 X 80mm CL8.8 RP	4
53	6020310934-5	French Head Bolt M24 x 3,00 x 80mm CL8.8 Special	4
54A	6020317523-2	Self-Locking Nut With Nylon M16 X 1,50 Mb Cl8 Ch.24mm H.16,00mm	4
54B	6020317434-1	Hex Nut M16 X 1.50 MB CL8 CH.24mm HLT.13mm	4
55	6020310338-0	Self-Locking Nut With Nylon M24 X 3,00 Ma Cl8 Ch.36mm H.15,00mm(White Galnanised)	4
56	6020317624-7	Hexagonal Head Bolt M20 X 1,50 X 100mm Cl8.8 Rp	8
57	6020312506-5	Hexagonal Head Bolt M20 X 2,50 X 160mm Cl8.8 Rp	2
58	6010601016-4	Small Plate	4
59	6020050788-9	Cardan Crar 353Tr X 353Pi X 800Tb With Cp (Stu)	1
60	6020010441-5	Smooth Washer M24 x Ø26xØ44x4mm	1
*61	5530018139-1	Support Mounted Height Control	2
62	6020317623-9	Nut hexagonal Self-locking C/Nylon Low M20 X 1,50 Mb Cl8 Ch30mm Alt22mm	4
63	6020310848-9	Nut hexagonal Self-locking C/Nylon Low M20 X 1,50 Mb Cl8 Ch30mm Alt22mm	12
64	6020010441-5	Smooth Washer M24 x Ø26xØ44x4mm	4
65B	6020016250-4	Wedge Lock Washer M16-DIN25201	8

BALDAN

• RPDL 2700 W/Rotating Tray

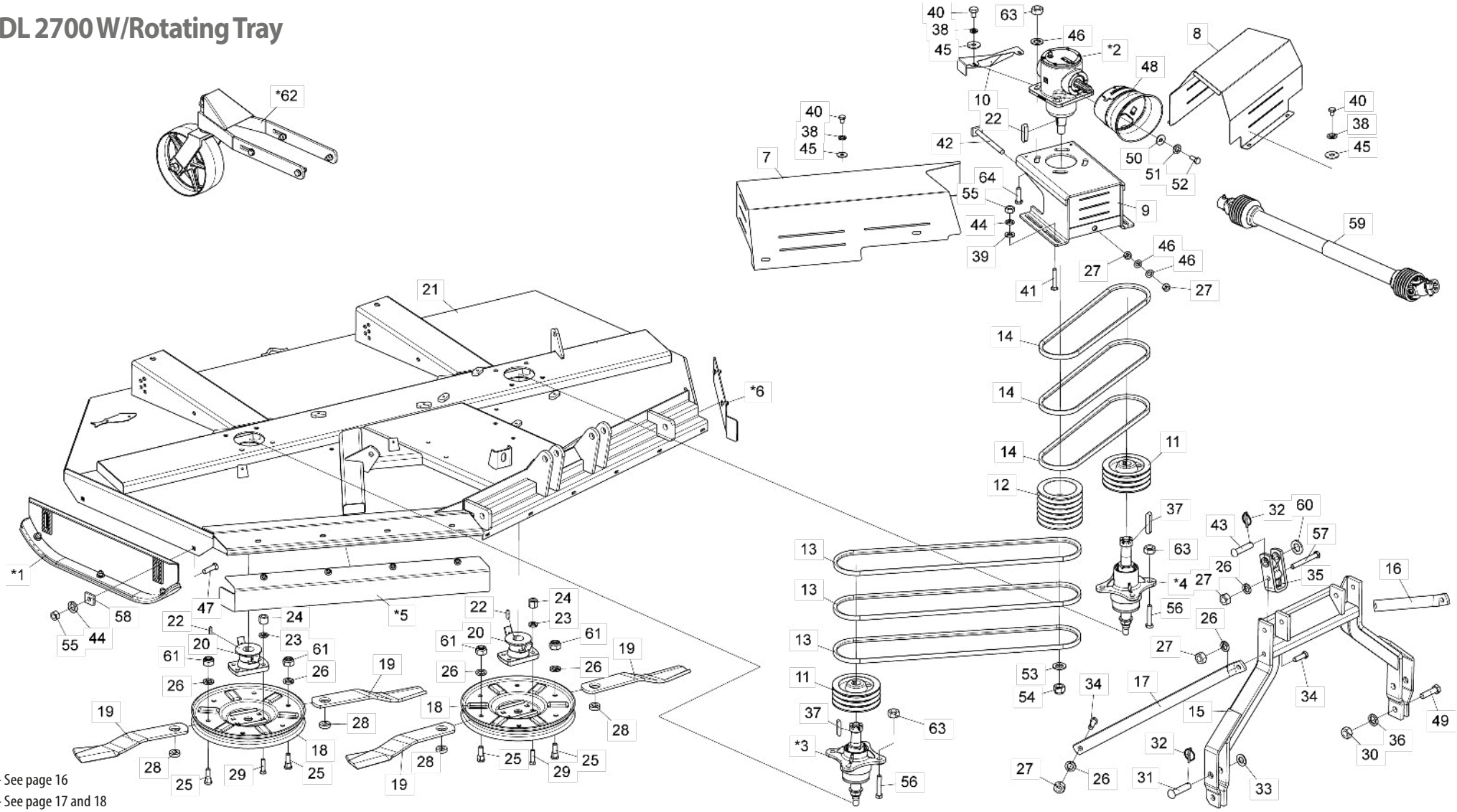

* Item 1 - See page 16
* Item 2 - See page 17 and 18
* Items 3 and 4 - See page 19
* Items 5 and 6 - See page 20
* Item 61 - See pages 24 and 25

For the purpose of replacing internal parts of the Multiplier Transmission Box (2), check the manufacturer's name on the box.*

• Table RPDL 2700 W/Rotating Tray

Item	Code	Product description	All
*1	5522010063-3	Complete Adjustment Ski	2
*2	6020057992-8	Transmision Box (BPN)	1
*2	6020059220-7	Transmission Box (COMER)	1
*3	5204010545-0	Complete Small Blade Hub	1
*4	5204010546-8	Complete Left Blades Hub	1
*5	5464010656-8	Complete Lateral Rear Protection 1185mm	1
*6	5464010654-1	Complete Lateral Rear Protection 485mm	1
7	5464010639-8	Complete Right Protection of Pulley	1
8	5464010640-1	Complete Left Protection of Pulley	1
9	5530017728-9	Box Fixation Support	1
10	5530016039-4	Protection Support (Rpdl-3000)	1
11	5448010001-0	Pulley 3 Canals Hub	2
12	5448010036-3	Pulley 6 Canals	1
13	6020050237-2	Belt C-96	3
14	6020050264-0	Belt C-68	3
15	5084010187-5	Hitch Drawbar	1
16	5530017766-1	Small Support of 3rd Hitch Point Plate	1
17	5530010214-9	Right Support 3rd Point	1
18	5038020001-2	Rotating Tray	2
19	4625265608-1	Blade 545mm X 3.1/2" X 1/2" Single Edge	4
20	5368010891-5	Tray Fixation Bearing W/Scrapper	2
21	5092010605-3	Blades Protection Box	1
22	6020058892-7	Cotter Sq.3/8" x 44mm	3
23	6020010412-1	Pressure Washer 5/8" Media Industry	8
24	6020310808-0	Double Hexagonal Nut 5/8" 18F Unf Gr5 Ch.15/16" H.21,50mm	8
25	6020310946-9	Round Head Bolt M20 x 2,5 X 65mm CL8.8 RT	4
26	6020010403-2	Pressure Washer M20 Media	10
27	6020311265-6	Hexagonal Nut M20 X 2,50 Ma Cl8 Ch.30mm H.16,00mm	12
28	5024070001-5	Smooth Washer Sq.20 X Ø49 X 15,00mm	4
29	6020310227-8	Screw Type A3 5/8" X 2.3/4" 18F Unf1A Gr2 Rp	8
30	6020310457-2	Hexagonal Nut M24 X 3,00 Ma Cl8 Ch.36mm H.19,00mm	2
31	6020310660-5	Pin Ø28 x 105mm	2
32	6020390293-2	Lock Ø5,75 X 40mm	3
33	6020010450-4	Smooth Washer M33 Ø31,00 x Ø56,00 x 4,00mm (DIN 125A)	2
34	6020310188-3	Hexagonal Head Bolt M20 X 2,50 X 65mm Cl8.8 Rp	4
35	6010602560-9	Hitch 190mm(Category 2)	2
36	6020010196-3	Pressure Washer M24 Media (	2
37	6020058893-5	Cotter Sq.3/8" x 52mm	2
38	6020010394-0	Pressure Washer M10 Media	10
39	6020015985-6	Smooth Washer M16 (Ø17 x Ø30 x 3mm) Standart DIN 125	4
40	6020310299-5	Hexagonal Head Bolt M10 X 1,50 X 15mm Cl8.8 Rt	10
41	6020310937-0	French Head Bolt M16 X 2,00 X 100mm CL8.8 RP	4
42	5268010867-6	Belt Stretcher 230mm	1
43	6020310595-1	French Head Pin Ø1" X 105mm	1
44	6020010124-6	Pressure Washer M16 Media	8
45	6020010443-1	Smooth Washer M10 Ø10,50XØ30,00X2,50mm(DIN 9021)	10
46	6020015986-4	Smooth Washer M20 (Ø21 x Ø37 x 3mm) Standart DIN 125	6
47	6020310938-8	French Head Bolt M16 x 2,00 x 60mm CL8.8 RP	4
48	6020310601-0	Protection Kit	1
49	6020310935-3	Hexagonal Head Bolt M24 X 3,00 X 90mm CL8.8 RP	2
50	6020010448-2	Smooth Washer M8 Ø8,40XØ24,00X2,00mm(DIN 9021)	4
51	6020010004-5	Pressure Washer M8 Media	4
52	6020311269-9	Hexagonal Head Bolt M8 X 1,25 X 20mm Cl8.8 Rt	4
53	6020010453-9	Smooth Washer M33 Ø34,00 X Ø60,00 X 5,00mm (Din 125A)	1
54	6020310795-4	Self-Locking Nut With Nylon 1.1/4" 12F Unf Gr5 Ch.1.7/8" H.33,00mm	1
55	6020310818-7	Hexagonal Nut M16 X 2,00 Ma Cl8 Ch.24mm H.13,00mm	8
56	6020317624-7	Hexagonal Head Bolt M20 X 1,50 X 100mm Cl8.8 Rp	8
57	6020312506-5	Hexagonal Head Bolt M20 X 2,50 X 160mm Cl8.8 Rp	2
58	6010601016-4	Small Plate	4
59	6020050788-9	Cardan Crar 353Tr X 353Pi X 800Tb With Cp (Stu)	1
60	6020010441-5	Smooth Washer M24 x Ø26xØ44x4mm	1
61	6020310837-3	Self-Locking Nut With Nylon M20 X 2,50 Ma Cl8 Ch.30mm H.18,70mm	4
*62	5530018139-1	Support Mounted Height Control	2
63	6020310848-9	Nut hexagonal Self-locking C/Nylon Low M20 X 1,50 Mb Cl8 Ch30mm Alt22mm	12
64	6020317623-9	Hexagonal Head Bolt M20 X 1,50 X 65mm Cl8.8 Rp	4

• RPDL 3000 W/Support

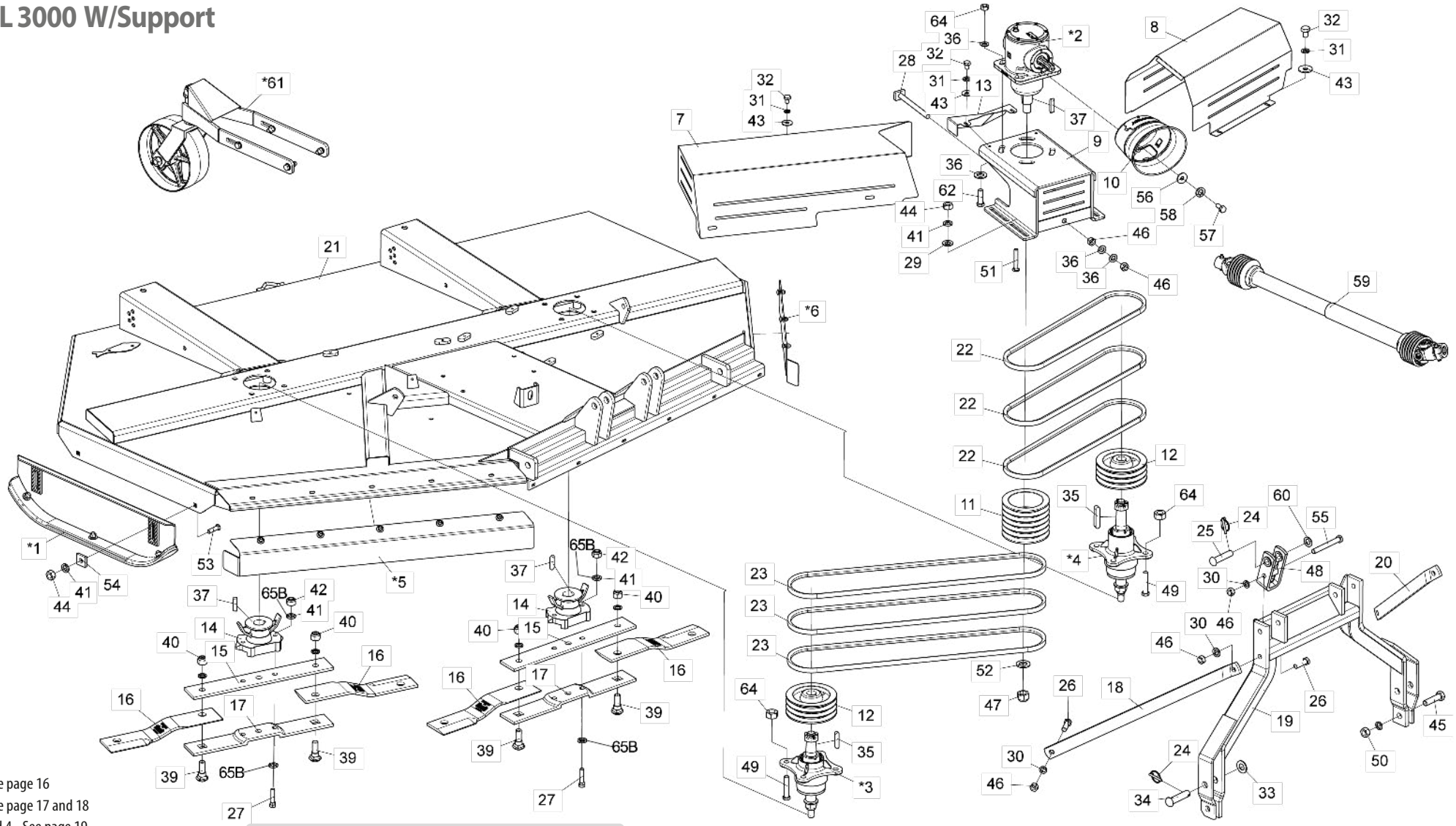

* Item 1 - See page 16
* Item 2 - See page 17 and 18
* Items 3 and 4 - See page 19
* Items 5 and 6 - See page 20
* Item 61 - See pages 24 and 25

For the purpose of replacing internal parts of the Multiplier Transmission Box (2), check the manufacturer's name on the box.*

Note: Items 15A,17A,27A,41A and 42A, use until 10/2023, and items 15B,17B,27B,41B, 42B and 65B use from 11/2023.

• Table RPDL 3000 W/Support

Item	Code	Product description	All
*1	5522010063-3	Complete Adjustment Ski	2
*2	6020057992-8	Transmision Box (BPN)	1
*2	6020059220-7	Transmission Box (COMER)	1
*3	5204010545-0	Complete Small Blade Hub	1
*4	5204010546-8	Complete Left Blades Hub	1
*5	5464010657-6	Complete Lateral Rear Protection 1305mm	1
*6	5464010655-0	Complete Lateral Rear Protection 640mm	1
7	5464010617-7	Complete Right Protection of Pulley	1
8	5464010618-5	Complete Left Protection of Pulley	1
9	5530017728-9	Box Fixation Support	1
10	6020310601-0	Protection Kit	1
11	5448010036-3	Pulley 6 Canals	1
12	5448010001-0	Pulley 3 Canals Hub	2
13	5530016039-4	Protection Support (Rpdl-3000)	1
14	5368010141-4	Fixation Bearing Of Blades With Scraper	2
15A	5040140011-4	Upper Blades Support Bar	2
15B	5040011074-0	Upper Blades Support Bar	2
16	4625265611-1	Knife 540 X 100 X 12mm Double Cut Extra Strong Steel	4
17A	5040140012-2	Lower Blades Support Bar	2
17B	5040011073-2	Lower Blades Support Bar	2
18	5530010313-7	Right Support 3rd Point	1
19	5084010187-5	Hitch Drawbar	1
20	5530160131-9	Small Plate Support 3rd Point	1
21	5092010597-9	Blades Protection Box	1
22	6020050238-0	Belt C-73	3
23	6020050237-2	Belt C-96	3
24	6020390293-2	Lock Ø5,75 X 40mm	3
25	6020310595-1	French Head Pin Ø1" X 105mm	1
26	6020310188-3	Hexagonal Head Bolt M20 X 2,50 X 65mm Cl8.8 Rp	4
27A	6020317617-4	Hexagonal Head Bolt M16 X 1,50 X 75mm Cl8.8 Rp Especial	4
27B	6020317861-4	Hexagonal Head Bolt M16 X 1,50 X 80mm Cl8.8 Rp	4
28	5268010871-4	290mm Belt Tensioner	1
29	6020015985-6	Smooth Washer M16 (Ø17 x Ø30 x 3mm) Standart DIN 125	4
30	6020010403-2	Pressure Washer M20 Media	6
31	6020010394-0	Pressure Washer M10 Media	10
32	6020310299-5	Hexagonal Head Bolt M10 X 1,50 X 15mm Cl8.8 Rt	10
33	6020010450-4	Smooth Washer M33 Ø31,00 x Ø56,00 x 4,00mm (DIN 125A)	2
34	6020310660-5	Pin Ø28 x 105mm	2
35	6020058893-5	Cotter Sq.3/8" x 52mm	2
36	6020015986-4	Smooth Washer M20 (Ø21 x Ø37 x 3mm) Standart DIN 125	10
37	6020058892-7	Cotter Sq.3/8" x 44mm	3
38	6020010196-3	Pressure Washer M24 Media	2
39	6020310934-5	French Head Bolt M24 x 3,00 x 80mm CL8.8 Special	4
40	6020310338-0	Self-Locking Nut With Nylon M24 X 3,00 Ma Cl8 Ch.36mm H.15,00mm(White Galnanised)	4
41A	6020010124-6	Pressure Washer M16 Media	12

Item	Code	Product description	All
41B	6020010124-6	Pressure Washer M16 Media	8
42A	6020317523-2	Self-Locking Nut With Nylon M16 X 1,50 Mb Cl8 Ch.24mm H.16,00mm	4
42B	6020317434-1	Hex Nut M16 X 1.50 MB CL8 CH.24mm HLT.13mm	4
43	6020010443-1	Smooth Washer M10 Ø10,50XØ30,00X2,50mm(DIN 9021)	10
44	6020310818-7	Hexagonal Nut M16 X 2,00 Ma Cl8 Ch.24mm H.13,00mm	8
45	6020310935-3	Hexagonal Head Bolt M24 X 3,00 X 90mm CL8.8 RP	2
46	6020311265-6	Hexagonal Nut M20 X 2,50 Ma Cl8 Ch.30mm H.16,00mm	8
47	6020310795-4	Self-Locking Nut With Nylon 1.1/4" 12F Unf Gr5 Ch.1.7/8" H.33,00mm	1
48	6010602560-9	Hitch 190mm(Category 2)	2
49	6020317624-7	Hexagonal Head Bolt M20 X 1,50 X 100mm Cl8.8 Rp	8
50	6020310457-2	Hexagonal Nut M24 X 3,00 Ma Cl8 Ch.36mm H.19,00mm	2
51	6020310937-0	French Head Bolt M16 X 2,00 X 100mm CL8.8 RP	4
52	6020010453-9	Smooth Washer M33 Ø34,00 X Ø60,00 X 5,00mm (Din 125A)	1
53	6020310938-8	French Head Bolt M16 x 2,00 x 60mm CL8.8 RP	4
54	6010601016-4	Small Plate	4
55	6020312506-5	Hexagonal Head Bolt M20 X 2,50 X 160mm Cl8.8 Rp	2
56	6020010448-2	Smooth Washer M8 Ø8,40XØ24,00X2,00mm(DIN 9021)	4
57	6020311269-9	Hexagonal Head Bolt M8 X 1,25 X 20mm Cl8.8 Rt	4
58	6020010004-5	Pressure Washer M8 Media	4
59	6020050788-9	Cardan Crar 353Tr X 353Pi X 800Tb With Cp (Stu)	1
60	6020010441-5	Smooth Washer M24 x Ø26xØ44x4mm	1
*61	5530018139-1	Support Mounted Height Control	2
62	6020317623-9	Nut hexagonal Self-locking C/Nylon Low M20 X 1,50 Mb Cl8 Ch30mm Alt22mm	4
63	6020010441-5	Smooth Washer M24 x Ø26xØ44x4mm	4
64	6020310848-9	Nut hexagonal Self-locking C/Nylon Low M20 X 1,50 Mb Cl8 Ch30mm Alt22mm	12
65B	6020016250-4	Wedge Lock Washer M16-DIN25201	8

BALDAN

• RPDL 3000 W/Rotating Tray

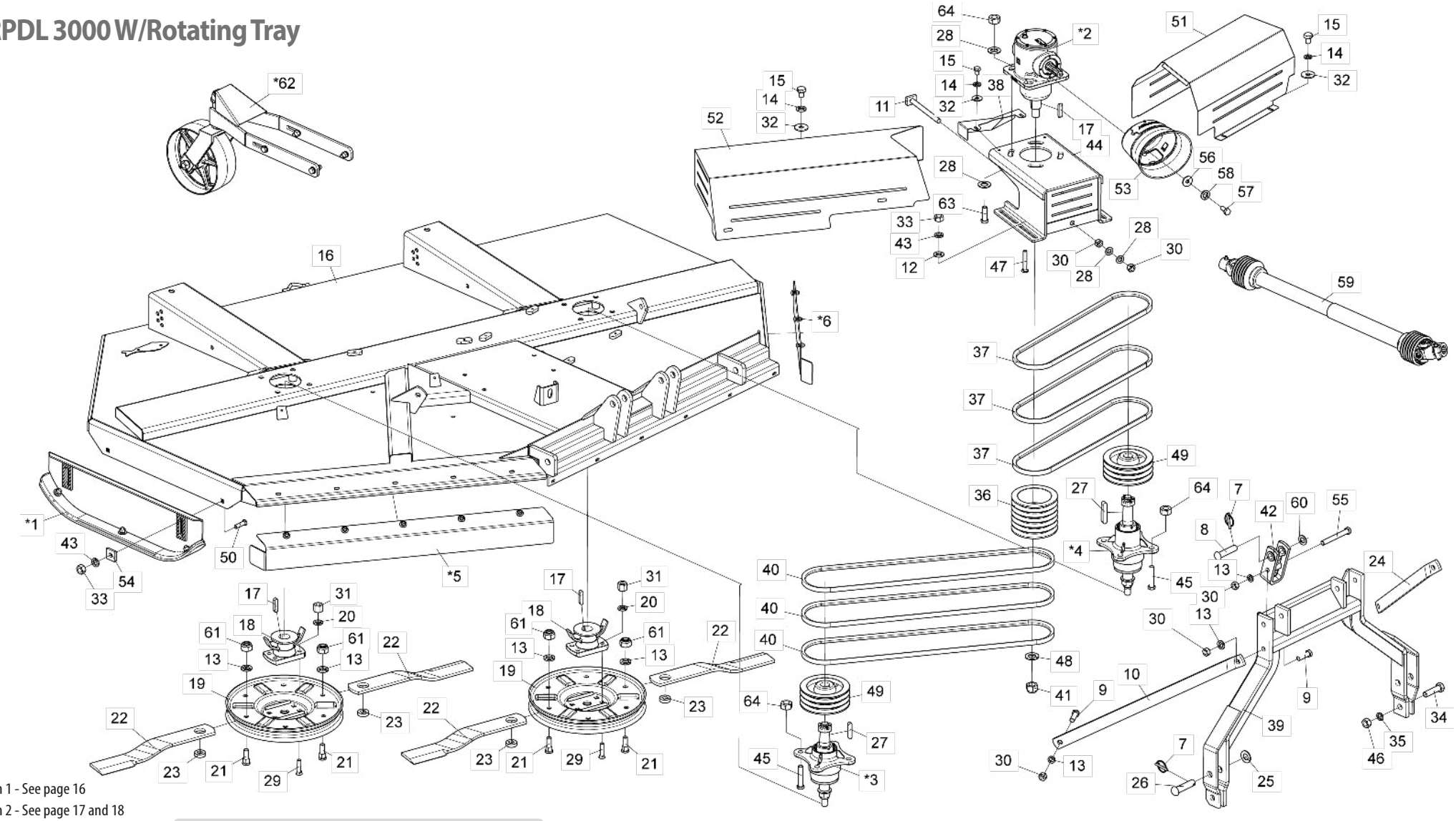

* Item 1 - See page 16
* Item 2 - See page 17 and 18
* Items 3 and 4 - See page 19
* Items 5 and 6 - See page 20
* Item 61 - See pages 24 and 25

For the purpose of replacing internal parts of the Multiplier Transmission Box (2), check the manufacturer's name on the box.*

• Table RPDL 3000 W/Rotating Tray

Item	Code	Product description	All
*1	5522010063-3	Complete Adjustment Ski	2
*2	6020057992-8	Transmision Box (BPN)	1
*2	6020059220-7	Transmission Box (COMER)	1
*3	5204010545-0	Complete Small Blade Hub	1
*4	5204010546-8	Complete Left Blades Hub	1
*5	5464010657-6	Complete Lateral Rear Protection 1305mm	1
*6	5464010655-0	Complete Lateral Rear Protection 640mm	1
7	6020390293-2	Lock Ø5,75 X 40mm	3
8	6020310595-1	French Head Pin Ø1" X 105mm	1
9	6020310188-3	Hexagonal Head Bolt M20 X 2,50 X 65mm Cl8.8 Rp	4
10	5530010313-7	Right Support 3rd Point	1
11	5268010871-4	290mm Belt Tensioner	1
12	6020015985-6	Smooth Washer M16 (Ø17 x Ø30 x 3mm) Standart DIN 125	4
13	6020010403-2	Pressure Washer M20 Media	10
14	6020010394-0	Pressure Washer M10 Media	10
15	6020310299-5	Hexagonal Head Bolt M10 X 1,50 X 15mm Cl8.8 Rt	10
16	5092010597-9	Blades Protection Box	1
17	6020058892-7	Cotter Sq.3/8" x 44mm	3
18	5368010891-5	Tray Fixation Bearing W/Scrapper	2
19	5038020001-2	Rotating Tray	2
20	6020010412-1	Pressure Washer 5/8" Media Industry	8
21	6020310946-9	Round Head Bolt M20 x 2,5 X 65mm CL8.8 RT	4
22	4625266010-0	Blade 605 X 3.1/2" X 1/2" Single Edge	4
23	5024070001-5	Smooth Washer Sq.20 X Ø49 X 15,00mm	4
24	5530160131-9	Small Plate Support 3rd Point	1
25	6020010450-4	Smooth Washer M33 Ø31,00 x Ø56,00 x 4,00mm (DIN 125A)	2
26	6020310660-5	Pin Ø28 x 105mm	2
27	6020058893-5	Cotter Sq.3/8" x 52mm	2
28	6020015986-4	Smooth Washer M20 (Ø21 x Ø37 x 3mm) Standart DIN 125	10
29	6020310227-8	Screw Type A3 5/8" X 2.3/4" 18F Unf1A Gr2 Rp	8
30	6020311265-6	Hexagonal Nut M20 X 2,50 Ma Cl8 Ch.30mm H.16,00mm	8
31	6020310808-0	Double Hexagonal Nut 5/8" 18F Unf Gr5 Ch.15/16" H.21,50mm	8
32	6020010443-1	Smooth Washer M10 Ø10,50XØ30,00X2,50mm(DIN 9021)	10
33	6020310818-7	Hexagonal Nut M16 X 2,00 Ma Cl8 Ch.24mm H.13,00mm	8
34	6020310935-3	Hexagonal Head Bolt M24 X 3,00 X 90mm CL8.8 RP	2
35	6020010196-3	Pressure Washer M24 Media (	2
36	5448010036-3	Pulley 6 Canals	1
37	6020050238-0	Belt C-73	3
38	5530016039-4	Protection Support (Rpdl-3000)	1
39	5084010187-5	Hitch Drawbar	1
40	6020050237-2	Belt C-96	3
41	6020310795-4	Self-Locking Nut With Nylon 1.1/4" 12F Unf Gr5 Ch.1.7/8" H.33,00mm	1
42	6010602560-9	Hitch 190mm(Category 2)	2
43	6020010124-6	Pressure Washer M16 Media	8
44	5530017728-9	Box Fixation Support	1
45	6020317624-7	Hexagonal Head Bolt M20 X 1,50 X 100mm Cl8.8 Rp	8
46	6020310457-2	Hexagonal Nut M24 X 3,00 Ma Cl8 Ch.36mm H.19,00mm	2
47	6020310937-0	French Head Bolt M16 X 2,00 X 100mm CL8.8 RP	4

Item	Code	Product description	All
48	6020010453-9	Smooth Washer M33 Ø34,00 X Ø60,00 X 5,00mm (Din 125A)	1
49	5448010001-0	Pulley 3 Canals Hub	2
50	6020310938-8	French Head Bolt M16 x 2,00 x 60mm CL8.8 RP	4
51	5464010618-5	Complete Left Protection of Pulley	1
52	5464010617-7	Complete Right Protection of Pulley	1
53	6020310601-0	Protection Kit	1
54	6010601016-4	Small Plate	4
55	6020312506-5	Hexagonal Head Bolt M20 X 2,50 X 160mm Cl8.8 Rp	2
56	6020010448-2	Smooth Washer M8 Ø8,40XØ24,00X2,00mm(DIN 9021)	4
57	6020311269-9	Hexagonal Head Bolt M8 X 1,25 X 20mm Cl8.8 Rt	4
58	6020010004-5	Pressure Washer M8 Media	4
59	6020050788-9	Cardan Crar 353Tr X 353Pi X 800Tb With Cp (Stu)	1
60	6020010441-5	Smooth Washer M24 x Ø26xØ44x4mm	1
61	6020310837-3	Self-Locking Nut With Nylon M20 X 2,50 Ma Cl8 Ch.30mm H.18,70mm	4
*62	5530018139-1	Support Mounted Height Control	2
63	6020317623-9	Hexagonal Head Bolt M20 X 1,50 X 65mm Cl8.8 Rp	4
64	6020310848-9	Nut hexagonal Self-locking C/Nylon Low M20 X 1,50 Mb Cl8 Ch30mm Alt22mm	12

• Complete Adjustment Ski

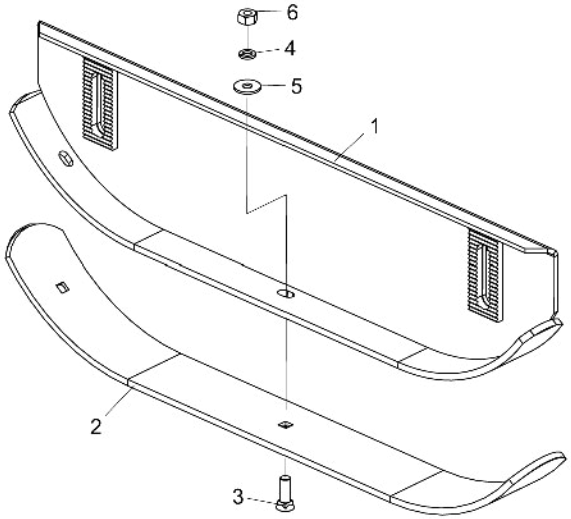

Item	Code	Product description	All
1	5522010064-1	Adjustment Ski	1
2	5040010968-8	Bar 4" x 3/8" x 952mm	1
3	6020310232-4	Screw Type A3 1/2" X 1.3/4" 12F Gr2 Rp	3
4	6020010410-5	Pressure Washer 1/2" Media Industry	3
5	5024010068-9	Smooth Washer Ø13,3 X Ø35,5 X 3,00Mm	3
6	6020310754-7	Hexagonal Nut 1/2" 12F W Gr5 Ch.7/8" Height 12,00Mm	3

• Transmision Box (BPN)

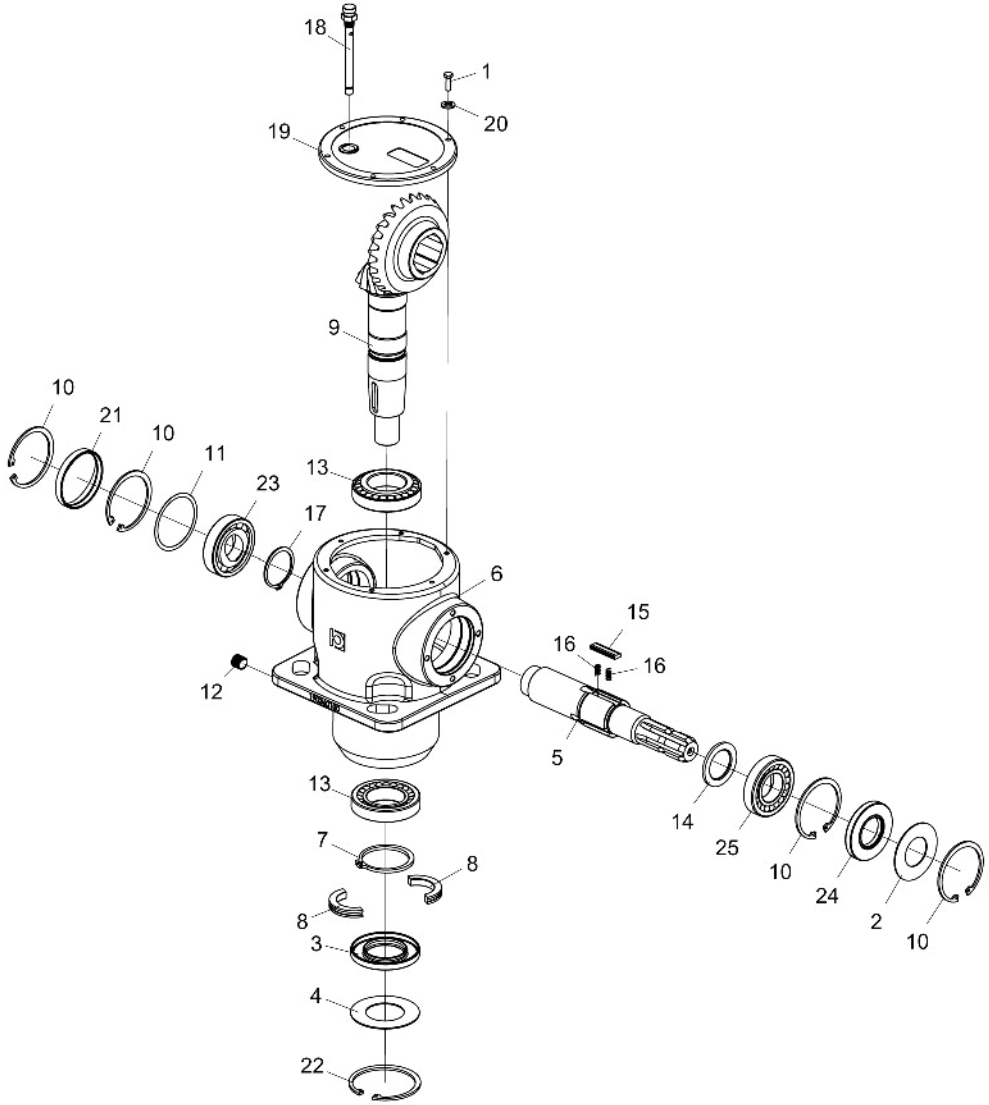

Item	Code	Product description	All
1	6020310270-7	Hexagonal Head Bolt M6 x 20mm	6
2	6020072030-2	Protection Disc Ø41 X Ø79,5 X 1,6	1
3	6020350950-5	Retainer Ø50,00 X Ø90,00 X 10,00Mm	1
4	6020072029-9	Deflector Ø50,5 X Ø90 X 1,6	1
5	6020090674-0	Shaft Xy Box 3068 Mont."R"	1
6	6020058143-4	Spare Housing	1
7	6020015906-6	Elastic Ring For Shaft E-65 X 4,0	1
8	6020015904-0	Ring Ø46 X Ø65 X 10	2
9	6020058134-5	Crown Z=25 - With Free Rotating/ Helical Pinion Z=13/Cx.3068	1
10	6020015907-4	Elastic Ring For Hole I-80 X 2,5	4
11	6020058142-6	Wedge Spacing Ø69,3 X Ø79,7 X 0,4	1
12	6020030755-3	Plug 3/8"	1
13	6020350951-3	Bearing 30208	2
14	6020015910-4	Washer	1
15	6020058144-2	Special Cotter 5 X 13 X 44	3
16	6020251706-7	Spring 3,8 X 4,8	6
17	6020015905-8	Elastic Ring For Shaft E-50 X 2,0	1
18	6020350948-3	Vent With Level Stick 3/8" Gas Conic	1
19	6020395049-0	Cast Cover For Hopper 3068	1
20	6020015909-0	Pressure Washer M6	6
21	6020395050-3	Cover Ø80 X 10	1
22	6020015908-2	Elastic Ring For Hole I-90 X 3,0	1
23	6020350952-1	Bearing 6208	1
24	6020350949-1	Retainer	1
25	6020350953-0	Bearing 30210	1

• Transmision Box (Comer)

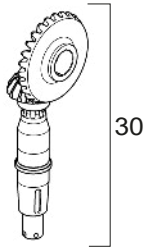

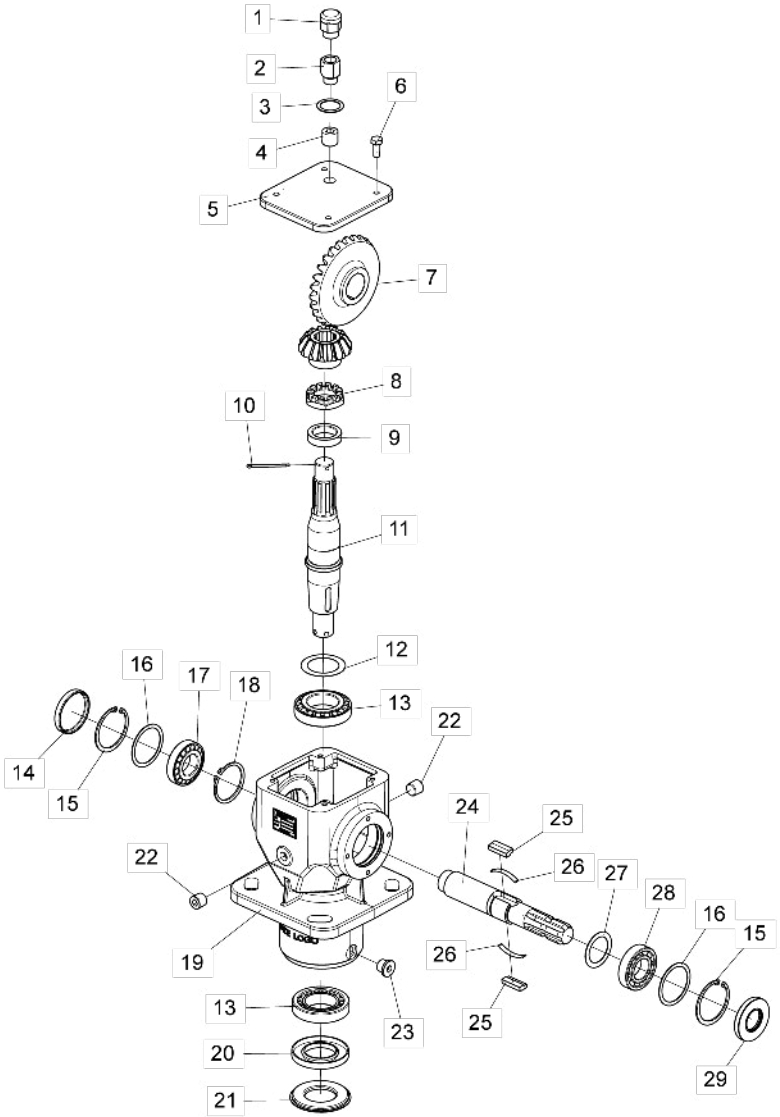

Item	Code	Product description	All
1	6020350992-0	Respire 1/2"BSP (Comer 8.6.7.00269)	1
2	6020310967-1	Protractor 1/2"BSP (Comer 8.6.0.01113)	1
3	6020059228-2	Shim 1/2"BSP 21.46x28x1 (Comer 8.3.3.01114)	1
4	6020030858-4	Plug for Allen Wrench 1/2" BSP (Comer 8.6.6.00088)	1
5	6020395146-1	Transmission Box Cover - Comer (0.140.1302.00)	1
6	6020311269-9	Hexagonal Head Bolt M8 X 1,25 X 20Mm CI8.8 Rt	4
7	6020059223-1	Crown M5.64 Z27 (Comer 0.140.6010.00) / Crown M5.64 Z14 (0.140.5010.00) Output Shaft (0.140.3007.00)	1
8	6020310965-5	Castle Nut W/Crown M30 x 1,5mm	1
9	6020095888-0	Espacing 30.3x43x10.5 (Comer 0.132.7109.00)	1
10	6020059229-0	Cotterpin M4 x 55mm (Comer 8.4.7.01111)	1
11	6020095890-2	Output Shaft (Comer 0.140.3009.00)	1
12	6020059225-8	Shim 50.3x70.3 (Comer 0.712.7500.00)	1
13	6020350054-0	Bearing 30210	2
14	6020395145-3	Cover Ø72 x 10mm (Comer 8.7.0.00744)	1
15	6020016003-0	Elastic Ring I75 x 2,5mm (Comer 8.5.2.00131)	2
16	6020059226-6	Shim 60.3x71.7 (Comer 0.248.7500.00)	2
17	6020350080-0	Bearing 30207	1
18	6020016004-8	Elastic Ring E40 x 1,8mm (Comer 8.5.1.00712)	1
19	6020061257-7	Machined Housing (Comer 0.140.0501.00)	1
20	6020350991-2	Retainer 50x90x10 (Comer 8.7.1.01107)	1
21	6020395147-0	Lower Protection Cover (Comer 0.139.7100.00)	1
22	6020030859-2	Plug for Allen Wrench 3/8"BSP	2
23	6020030860-6	Magnetic Plug for Allen Wrench 3/8"BSP (Comer 9510.106.025)	1
24	6020096139-3	Input Shaft 3/8 Z6 (Comer 0.140.2010.00)	1
25	6020059227-4	Cutter 13 x 7 x 31mm (Comer 0.267.7109.00)	2
26	6020251948-5	Cutter Lock Spring	2
27	6020059224-0	Shim 48. 0x35.3x1 (Comer 0.313.7000.00)	1
28	6020350022-2	Bearing 6207-Z	1
29	6020350990-4	Retainer NBR 35x72x10 (Comer 8.7.1.02545)	1
		Replacement Set (Shaft / Crown / Pinion)	
30	5528011159-6	Brushcutter Transmission Cx Replacement System (Comer)	-

• Complete Blades Hub

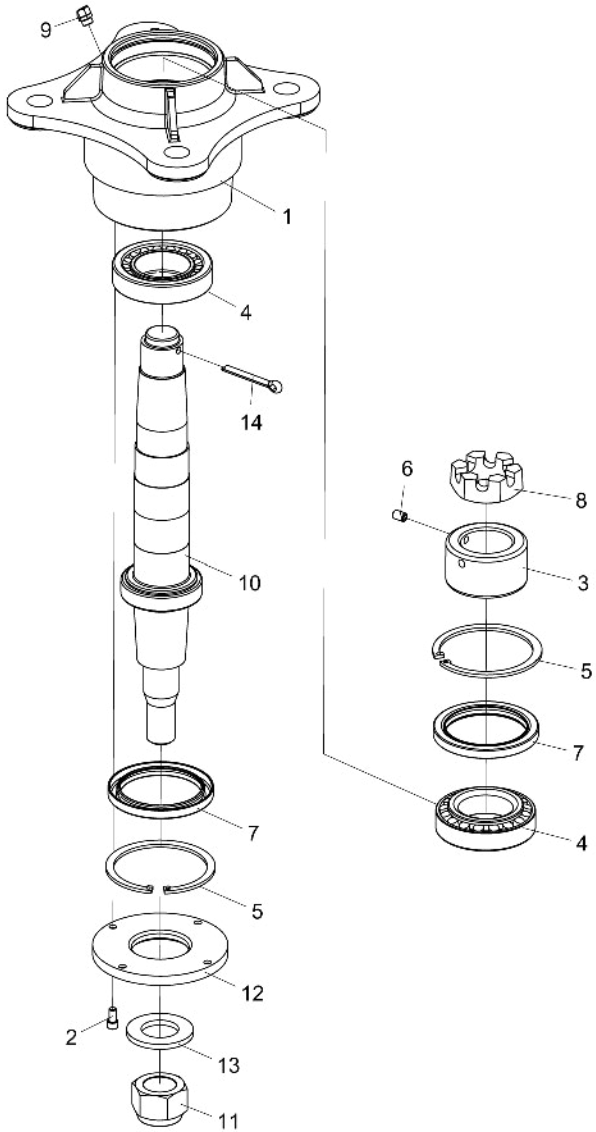

Item	Code	Product description	All	Right	Left
1	5204010288-4	Spare Blades Hub		1	
1	5204010543-3	Blades Spare Hub			1
2	6020310099-2	Allen Bolt C/C 1/4" X 1/2" 20F Unc1A Cl12.9 Rt (Phosphated)	4		
3	5456030008-8	Nut R.048,7Mm 14Fpp Lock Of The Cube	1		
4	6020350056-7	Bearing 32210	2		
5	6020010292-7	Retaining Ring I-95	2		
6	6020310096-8	Allen Bolt S/C 5/16" X 1/2" 18F Unc1A Cl12.9 Rt (Phosphated)	1		
7	6020350266-7	Retainer Ø73,50 X Ø95,00 X 9,00Mm	2		
8	5456020005-9	Nut 1.1/2" 14F	1		
9	6020130110-9	Grease Fitting 1/8"	1		
10	5232012324-0	Small Blades Shaft		1	
10	5232012325-9	Large Blades Shaft			1
11	6020310810-1	Self-Locking Nut With Nylon 1.1/4" 12F Unf Gr5 Ch.1.7/8"	1		
12	5538010080-0	Hub Cover Ø52 X Ø122 X 9,50Mm	1		
13	6020010453-9	Smooth Washer M33 Ø34,00 X Ø60,00 X 5,00mm (Din 125A)	1		
14	6020050116-3	Cotterpin 1/4" X 2"	1		

• Complete Large Lateral Protection

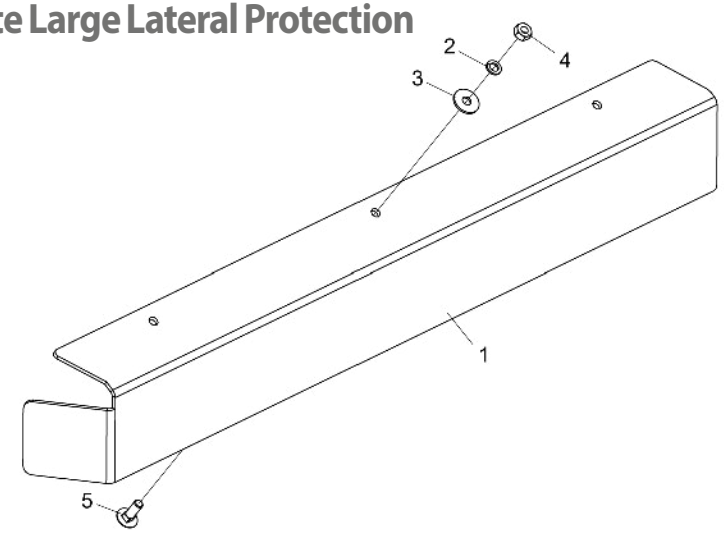

Item	Code	Product description	RPDL 2250	RPDL 2700	RPDL 3000
1	5136018809-8	Plate of Lateral Rear Protection 1005mm	1		
1	5136018810-1	Plate of Lateral Rear Protection 1242mm		1	
1	5136018811-0	Plate of Lateral Rear Protection 1360mm			1
2	6020010394-0	Pressure Washer M10 Media	3	4	5
3	6020010443-1	Smooth Washer M10 Ø10,50XØ30,00X2,50mm(DIN 9021)	3	4	5
4	6020310822-5	Hexagonal Nut M10 X 1,50 Ma Cl8 Ch.17Mm H.8,00Mm	3	4	5
5	6020317544-5	French Head Bolt M10 X 1,50 X 30Mm Cl8.8 Rt	3	4	5

• Complete Small Lateral Protection

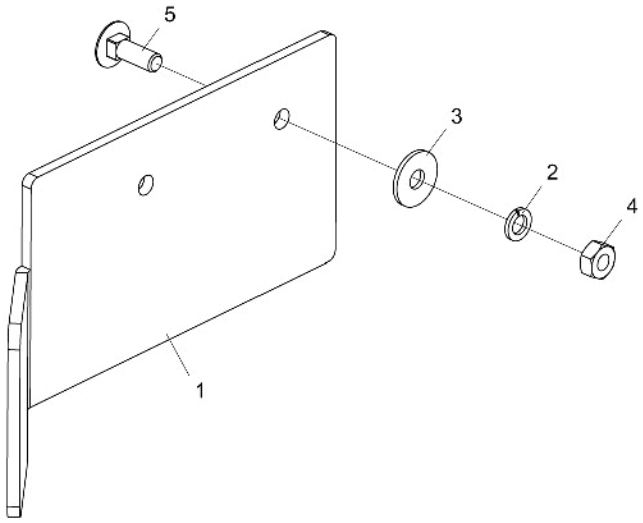

Item	Code	Product description	RPDL 2250	RPDL 2700	RPDL 3000
1	5136018806-3	Plate of Lateral Rear Protection 282mm	1		
1	5136018807-1	Plate of Lateral Rear Protection 542mm		1	
1	5136018808-0	Plate of Lateral Rear Protection 694mm			1
2	6020010394-0	Pressure Washer M10 Media	2	2	3
3	6020010443-1	Smooth Washer M10 Ø10,50XØ30,00X2,50mm(DIN 9021)	2	2	3
4	6020310822-5	Hexagonal Nut M10 X 1,50 Ma Cl8 Ch.17Mm H.8,00Mm	2	2	3
5	6020317544-5	French Head Bolt M10 X 1,50 X 30Mm Cl8.8 Rt	2	2	3

• Chains Protections

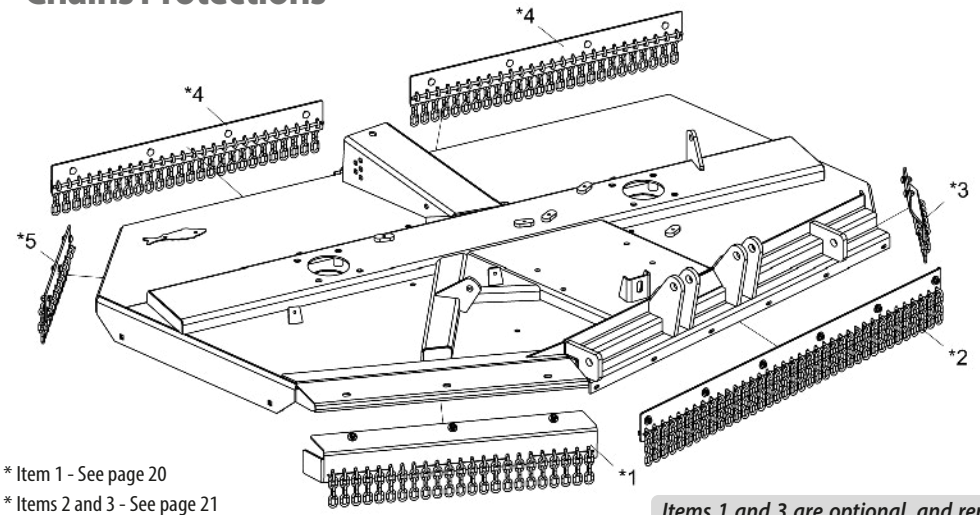

* Item 1 - See page 20
* Items 2 and 3 - See page 21
* Items 4 and 5 - See page 22

Items 1 and 3 are optional, and replace Plate Protections.

Item	Code	Product description	All	RPDL 2250	RPDL 2700	RPDL 3000
*1	5464010650-9	Complete Front Right Lateral Protection (Chain)		1		
*1	5464010643-6	Complete Front Right Lateral Protection (Chain)			1	
*1	5464010621-5	Complete Front Right Lateral Protection (Chain)				1
*2	5464010622-3	Complete Central Front Protection (Chain)	1			
*3	5464010648-7	Complete Front Left Lateral Protection (Chain)		1		
*3	5464010641-0	Complete Front Left Lateral Protection (Chain)			1	
*3	5464010619-3	Complete Front Left Lateral Protection (Chain)				1
*4	5464010649-5	Complete Central Rear Protection (Chain)		2		
*4	5464010642-8	Complete Central Rear Protection (Chain)			2	
*4	5464010620-7	Complete Central Rear Protection (Chain)				2
*5	5464010651-7	Complete Rear Right Lateral Protection (Chain)		1		
*5	5464010644-4	Complete Rear Right Lateral Protection (Chain)			1	
*5	5464010623-1	Complete Rear Right Lateral Protection (Chain)				1

• Complete (Chain) Right Front Lateral Protection

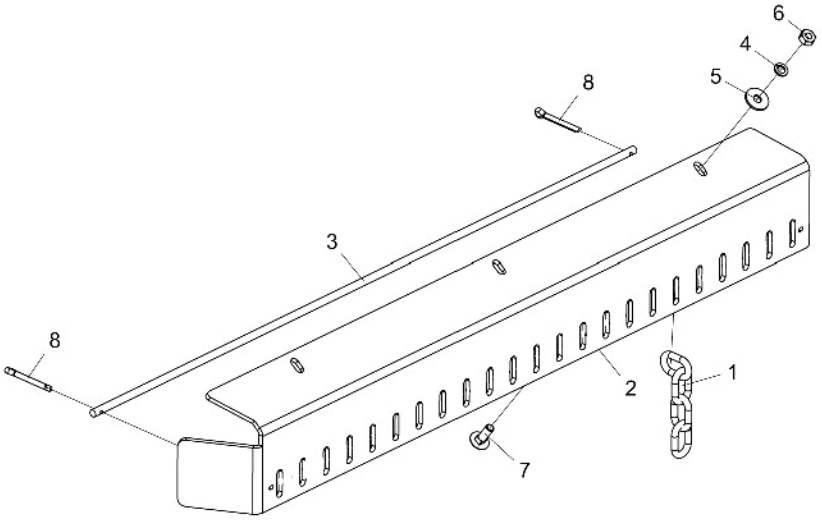

Item	Code	Product description	All	RPDL 2250	RPDL 2700	RPDL 3000
1	6020058091-8	Protection Chain (4 Links)		23	29	32
2	5136018798-9	Plate of Lateral Rear Protection 1007mm		1		
2	5136018770-9	Plate of Lateral Rear Protection 1242mm			1	
2	5136018697-4	Plate of Lateral Rear Protection 1362mm				1
3	5040010996-3	Round Bar 3/8" X 940mm		1		
3	5040010989-0	Round Bar 3/8" X 1180mm			1	
3	5040010972-6	Round Bar 3/8" X 1300mm				1
4	6020010394-0	Pressure Washer M10 Media		3	4	5
5	6020010443-1	Smooth Washer M10 Ø10,50XØ30,00X2,50mm(DIN 9021)		3	4	5
6	6020310822-5	Hexagonal Nut M10 X 1,50 Ma Cl8 Ch.17Mm H.8,00Mm		3	4	5
7	6020317544-5	French Head Bolt M10 X 1,50 X 30Mm Cl8.8 Rt		3	4	5
8	6020050101-5	Cotterpin 1/8" X 1"	2			

• Complete (Chain) Central Front Lateral Protection

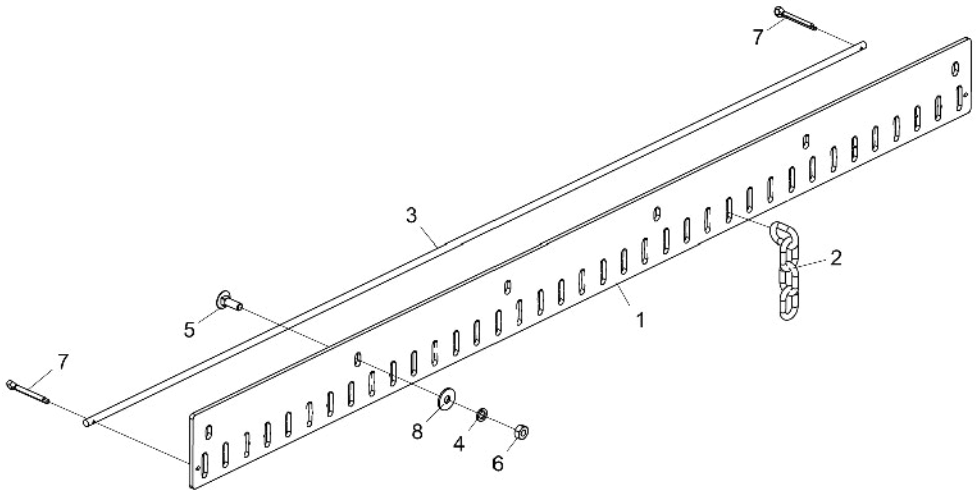

Item	Code	Product description	All
1	5136018695-8	Plate of Lateral Rear Protection 1485mm	1
2	6020058091-8	Protection Chain (4 Links)	37
3	5040010970-0	Round Bar 3/8" x 1485mm	1
4	6020010394-0	Pressure Washer M10 Media	6
5	6020317544-5	French Head Bolt M10 X 1,50 X 30Mm Cl8.8 Rt	6
6	6020310822-5	Hexagonal Nut M10 X 1,50 Ma Cl8 Ch.17Mm H.8,00Mm	6
7	6020050101-5	Cotterpin 1/8" X 1"	2
8	6020010443-1	Smooth Washer M10 Ø10,50XØ30,00X2,50mm(DIN 9021)	6

• Complete (Chain) Left Front Lateral Protection

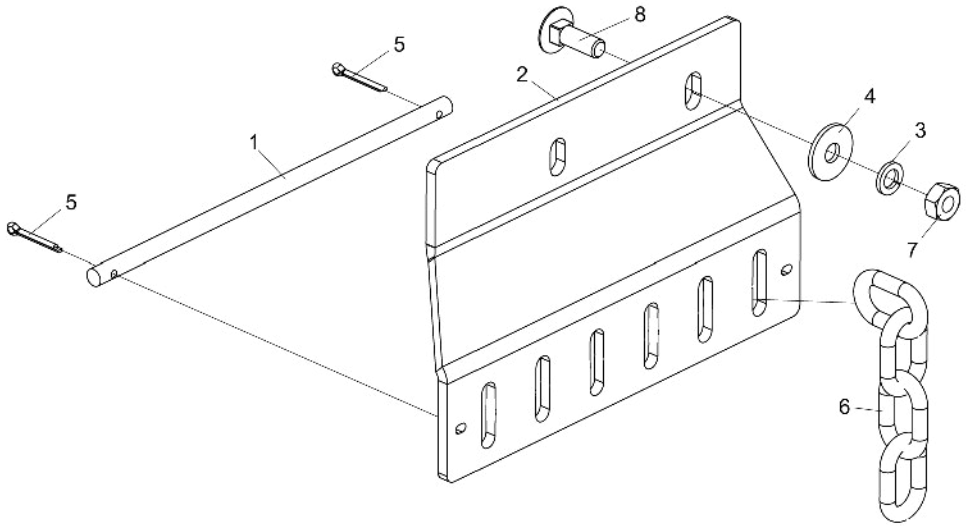

Item	Code	Product description	All	RPDL 2250	RPDL 2700	RPDL 3000
1	5040010998-0	Round Bar 3/8" X 260Mm		1		
1	5040010987-4	Round Bar 3/8" X 515Mm			1	
1	5040010969-6	Round Bar 3/8" X 670Mm				1
2	5136018796-2	Plate of Lateral Rear Protection 282Mm		1		
2	5136018768-7	Plate of Lateral Rear Protection 485Mm			1	
2	5136018694-0	Plate of Lateral Rear Protection 640Mm				1
3	6020010394-0	Pressure Washer M10 Media		2	2	3
4	6020010443-1	Smooth Washer M10 Ø10,50XØ30,00X2,50mm(DIN 9021)		2	2	3
5	6020050101-5	Cotterpin 1/8" X 1"	2			
6	6020058091-8	Protection Chain (4 Links)		6	12	16
7	6020310822-5	Hexagonal Nut M10 X 1,50 Ma Cl8 Ch.17Mm H.8,00Mm		2	2	3
8	6020317544-5	French Head Bolt M10 X 1,50 X 30Mm Cl8.8 Rt		2	2	3

• Complete (Chain) Central Rear Protection

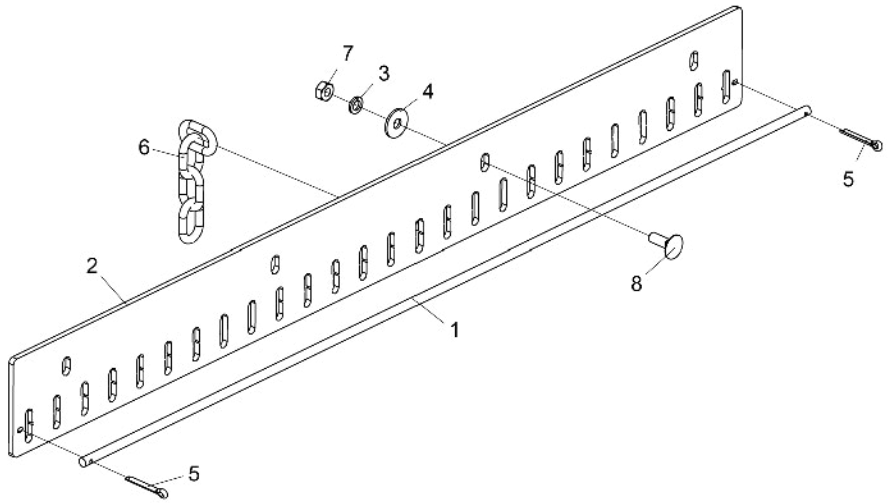

Item	Code	Product description	All	RPDL 2250	RPDL 2700	RPDL 3000
1	5040010995-5	Round Bar 3/8" X 1045mm		1		
1	5040010988-2	Round Bar 3/8" X 1130mm			1	
1	5040010971-8	Round Bar 3/8" x 1255mm				1
2	5136018797-0	Plate of Lateral Rear Protection 1045mm		1		
2	5136018769-5	Plate of Lateral Rear Protection 1145mm			1	
2	5136018696-6	Plate of Lateral Rear Protection 1255mm				1
3	6020010394-0	Pressure Washer M10 Media		4	4	5
4	6020010443-1	Smooth Washer M10 Ø10,50XØ30,00X2,50mm(DIN 9021)		4	4	5
5	6020050101-5	Cotterpin 1/8" X 1"	2			
6	6020058091-8	Protection Chain (4 Links)		26	28	31
7	6020310822-5	Hexagonal Nut M10 X 1,50 Ma Cl8 Ch.17Mm H.8,00Mm		4	4	5
8	6020317544-5	French Head Bolt M10 X 1,50 X 30Mm Cl8.8 Rt		4	4	5

• Complete (Chain) Right Rear lateral Protection

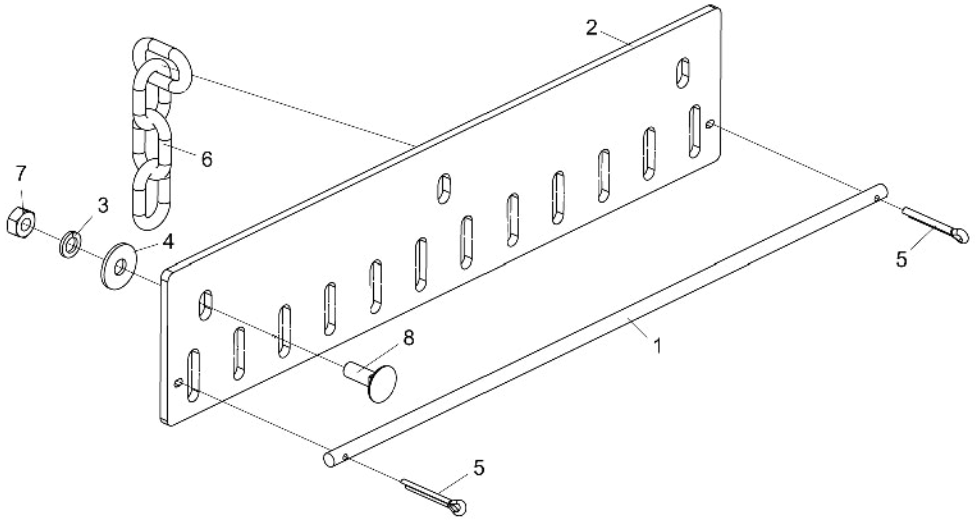

Item	Code	Product description	All	RPDL 2250	RPDL 2700	RPDL 3000
1	5040010997-1	Round Bar 3/8" X 510mm		1		
1	5040010990-4	Round Bar 3/8" X 690mm			1	
1	5040010973-4	Round Bar 3/8" X 810mm				1
2	5136018799-7	Plate of Lateral Rear Protection 510mm		1		
2	5136018771-7	Plate of Lateral Rear Protection 690mm			1	
2	5136018698-2	Plate of Lateral Rear Protection 810mm				1
3	6020010394-0	Pressure Washer M10 Media	3			
4	6020010443-1	Smooth Washer M10 Ø10,50XØ30,00X2,50mm(DIN 9021)	3			
5	6020050101-5	Cotterpin 1/8" X 1"	2			
6	6020058091-8	Protection Chain (4 Links)		13	17	20
7	6020310822-5	Hexagonal Nut M10 X 1,50 Ma Cl8 Ch.17Mm H.8,00Mm	3			
8	6020317544-5	French Head Bolt M10 X 1,50 X 30Mm Cl8.8 Rt		3	3	
8	6020310928-0	Hexagonal Head Bolt M10 X 1,25 X 30mm Cl8.8 RT				3

• Depth Wheel W/Bearing

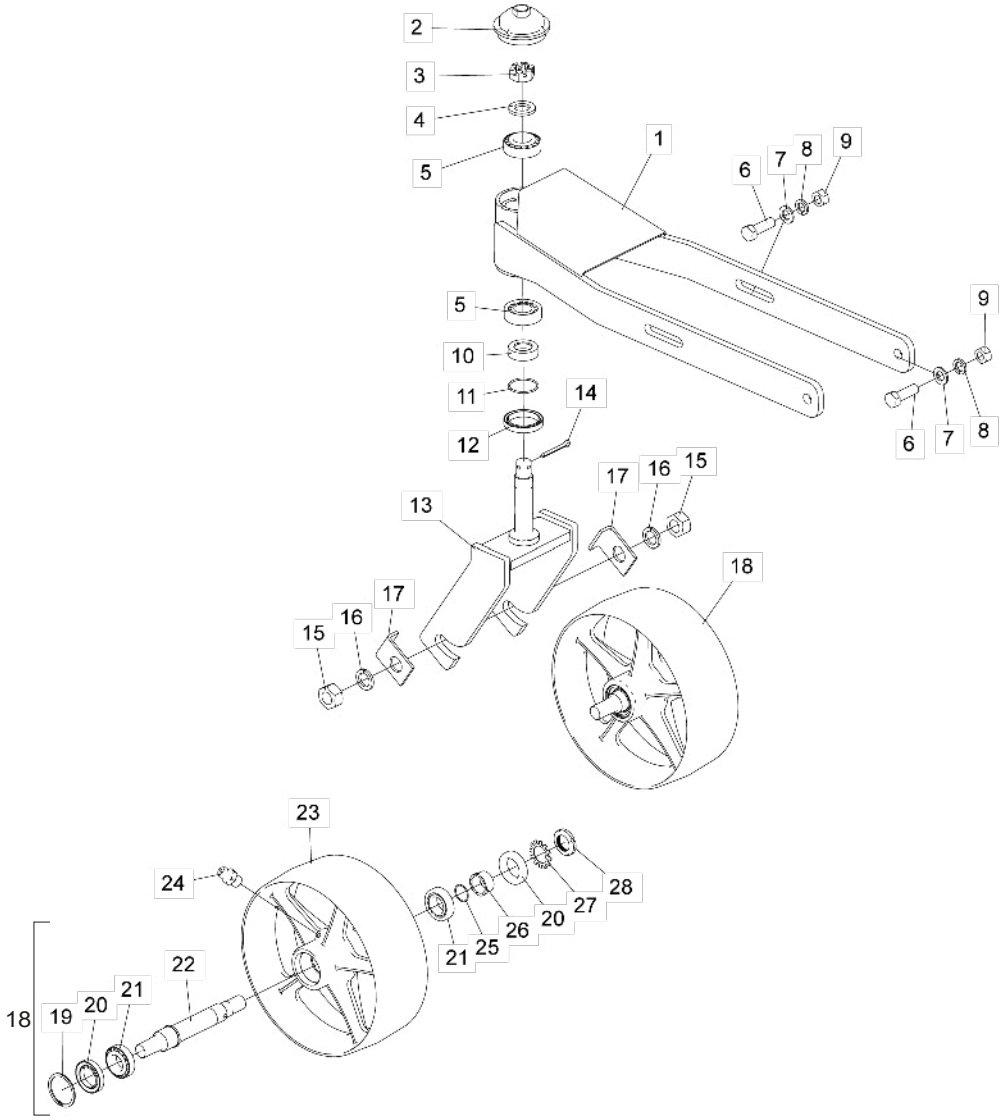

Item	Code	Product description	All
1	5530018140-5	Height Control Support (Wheel / Bearing)	1
2	5096010053-8	Wheel Hub Cap	1
3	6020310791-1	Nut M24 X 2,00 Mb Cl8 Ch.36mm H.19,00mm Without Crown	1
4	5024010039-5	Smooth Washer Ø26,2 X Ø44 X 4,75mm	1
5	6020350062-1	Bearing 32206	2
6	6020311210-9	Hexagonal Head Bolt M16 X 2,00 X 50mm Cl8.8 Rt	4
7	6020015985-6	Smooth Washer M16 (Ø17 x Ø30 x 3mm) Standart DIN 125	4
8	6020010124-6	Pressure Washer M16 Media	4
9	6020310818-7	Hexagonal Nut M12 X 1,75 Ma Cl8 Ch.19mm H.10,00mm	4
10	5080012088-5	Support Bushing	1
11	6020016020-0	O'Ring Ø 29,87 X 1,78 - 2025 N 0674-70	1
12	6020350248-9	Retainer Ø50,00 X Ø65,00 X 10,00mm	1
13	5530018141-3	Wheel Support	1
14	6020050116-3	Cotterpin 1/4" X 2"	1
15	6020310457-2	Hexagonal Nut M24 X 3,00 Ma Cl8 Ch.36mm H.19,00mm	2
16	6020010196-3	Pressure Washer M24 Media (	2
17	5136060170-0	Plate Of Wheel Lock	2
18	5498010340-7	Wheel With Mounted Bearing	1
19	6020016019-6	Elastic Ring Din 472 - 56 X 2	1
20	6020351013-9	Retainer Ø35.00 X Ø56,00 X 10.00mm (7452 Br)	2
21	6020350868-1	Bearing 32006Xj (Nsk)	2
22	5232012451-4	Wheel Shaft	1
23	5498010341-5	Machined Wheel (Bearing)	1
24	6020130100-1	Grease Fitting 1/4"	1
25	6020016018-8	O'Ring Ø 26,7 X 1,78 - 2023 N 0674-70	1
26	5080012086-9	Support Bushing	1
27	6020016011-0	Lock Washer Mb6 Ø30mm	1
28	6020311296-6	Nut Km6 M30 X 1,5mm	1

• Stickers

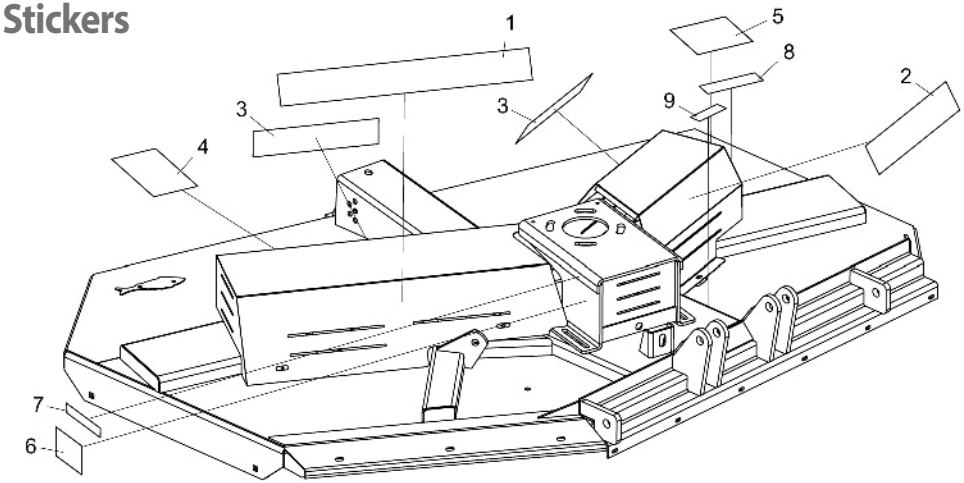

Item	Code	Product description	All	RPDL 2250	RPDL 2700	RPDL 3000
1	6020071073-0	Sticker Rpdl-2250 Baldan (800 X 100Mm)		1		
1	6020071074-9	Sticker Rpdl-2700 Baldan (800 X 100Mm)			1	
1	6020071075-7	Sticker Rpdl-3000 Baldan (800 X 100Mm)				1
2	6020071029-3	Sticker Baldan (500 X 100Mm)	1			
3	6020071082-0	Sticker Baldan (400 X 90Mm)	2			
4	5206010102-7	Sticker Rotary Cutter Warning	1			
5	6020070817-5	Sticker Warning Of Rotary Cutter (Portuguese/English/Spanish)	1			
6	5206010294-5	Sticker Remove The Plug Before Place Rotary Cutter	1			
7	5206010026-8	Sticker Level Of Oil Check (Rotary Cutter)	1			
8	6020070886-8	Sticker Lubricate And Retighten (58 X 195Mm)	1			
9	6020070894-9	Sticker Attention "Rotating Cardan" (45 X 130Mm)	1			

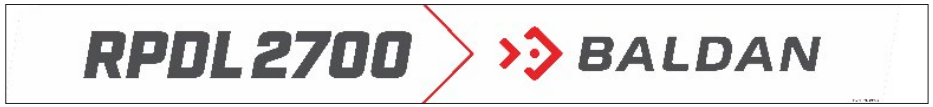

Item 1

Itens 2 e 3

Item 4

Item 5

Item 6

Item 7

Item 8

Item 9

BALDAN

Avenida Baldan, 1500
Nova Matão
15.993-900
Matão/SP - Brasil
sac@baldan.com.br
export@baldan.com.br

+55 16 3221 6500
baldan.com.br