Instruction Manual

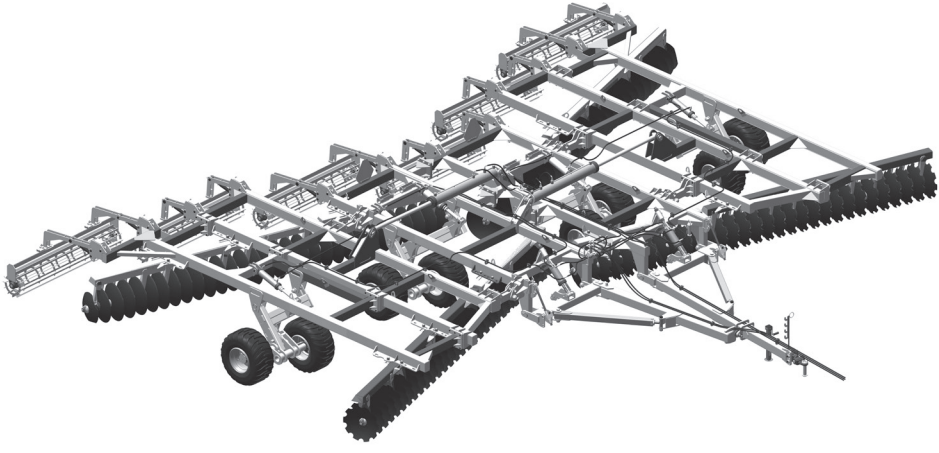

MOVERE

Tandem Levelling Remote Control Harrow

BALDAN

Presentation

We appreciate your preference and congratulate you for the Excellent choice you have justa made, as you have purchased a product manufactured with **BALDAN IMPLEMENTOS AGRÍCOLAS S/A.**

This manual will guide you through the procedures that are necessary since its acquisition until the operating procedures of use, safety and maintenance.

BALDAN guarantees that it delivered this implement to the reseller complete and in perfect condition.

The resale is accountable for the custody and maintenance during the period it was in its power, and also for assembly, retightening, lubrication and overhaul.

In technical delivery, the dealer should guide the user customer regarding maintenance, security, their obligation to possible technical assistance, the strict observance of the warranty and reading the instructions manual.

Any request for technical assistance under warranty must be made to the dealer where it was purchased.

We reiterate the need for careful reading of the warranty certificate and the observance of all items in this manual, because doing so will increase the life of your implement.

Instruction
Manual

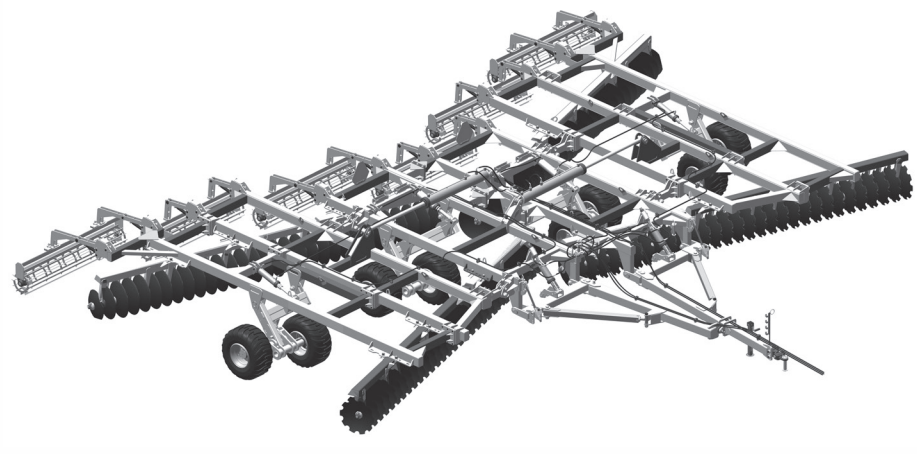

MOVERE

Tandem Leveling Remote Control Harrow

BALDAN IMPLEMENTOS AGRÍCOLAS S/A.
CNPJ: 52.311.347/0009-06
Insc. Est.: 441.016.953.110

Scan the QR Code on the nameplate of your equipment and access this instruction Manual online.

BALDAN

Index

BALDAN WARRANTY **08**
GENERAL INFORMATION **09**
To owner *09*
SAFETY STANDARDS **10**
To operator ..... *10 - 13*
WARNINGS ..... **14 - 15**
COMPONENTS **16**
MOVERE - Tandem Levelling Remote Control Harrow *16*
DIMENSIONS **17**
MOVERE 88 Discs *17*
MOVERE 108 Discs *18*
MOVERE 124 Discs *19*
SPECIFICATIONS **20**
MOVERE - Tandem Levelling Remote Control Harrow *20*
ASSEMBLY **21**
Assembly of the section of discs *21*
Assembly the finishing disc *22*
Assembly the disc sections - MOVERE 88 discs *23*
Assembly the disc sections - MOVERE 108 discs *24*
Assembly the disc sections - MOVERE 124 discs *25*
Assembly the frames in the left center frame *26*
Assembly the disc sections on the central frames *27*
Assembly the left and left side intermediate uprights and the frames *28*
Assembly of the disc sections on the frames of the left intermediate and left side uprights *29*
Assembly of the cleaners *30*
Assembly the right center bracket of the wheel axle *31*
Assembly the left center bracket of the wheel axle on the frame *32*
Assembly of tyres *33*
Assembly the frames union bracket *34*
Assembly of the coupling header - MOVERE 88 discs *35*
Assembly of the coupling header - MOVERE 108 e 124 discs *36*
Assembly of the hydraulic cylinder in the coupling header - MOVERE 88 discs *37*
Assembly of the hydraulic cylinder in the coupling header - MOVERE 108 and 124 discs *38*
Assembly the hydraulic cylinders on the uprights *39*
Assembly the tillage rollers *40*
Assembly the tillage rollers - MOVERE 88 discs *41*
Assembly the tillage rollers - MOVERE 108 discs *42*
Assembly the tillage rollers - MOVERE 124 discs *43*
Assembly of signage *44*

Index

Assembly the hydraulic system - MOVERE 88 discs *45*
Assembly the hydraulic system - MOVERE 108 discs *46*
Assembly the hydraulic system - MOVERE 124 discs *47*

HITCH **48**
Hitch of the disc harrows on the tractor traction bar *48*

LEVELLING **49**
Disc harrows levelling - Part I *49*
Disc harrows levelling - Part II *50*

ADJUSTMENTS **51**
Adjustments for transportation - Part I *51*
Adjustments for transportation - Part II *52*
Adjustments for transportation - Part III *53*
Adjustments for transportation - Part IV *54*
Adjustments for transportation - Part V *55*
Working depth adjustment *56*
Tillage roller pressure adjustment - Part I *57*
Tillage roller pressure adjustment - Part II *58*
Grid centering adjustment *59*

OPERATIONS **60**
Recomendations for operation - Part I *60*
Recomendations for operation - Part II *61*

CALCULATIONS **62**
Approximate hourly production *62*

MAINTENANCE **63**
Tire pressure *63*
Lubrication *64*
Lubricate every 24 working hours - Part I *65*
Lubricate every 24 working hours - Part II *66*
Adjustments of the rollers bearings *67*
Lubrication of the bearings *67*
Adjustments of the disc section bearings *68*
Bearing oil *68*
Operational maintenance *69*
Cares *70*
General cleaning - Part I *70*
General cleaning - Part II *71*
Harrow conservation - Part I *71*
Harrow conversation - Part II ..... *71 - 72*

Index

LIFTING **73**
Warnings for lifting ..... *73 - 74*
Inspection of locking hooks, chains and slings *75*
Storage *75*
Lifting points *76*
OPTIONAL **76**
Cutting discs *76*
IDENTIFICATION **77**
Identification plate *77*
Product Identification *78*
NOTES **79**
CERTIFICATE **80**
Certificate of warranty ..... *80 - 86*

▪ Baldan Warranty

BALDAN IMPLEMENTOS AGRÍCOLAS S/A guarantees the normal operation of the implement to the dealer for a period of 6 (six) months from the date of delivery on the resale invoice to the first end consumer.

During this period, **BALDAN** undertakes to remedy defects in materials and/or workmanship of its responsibility, being labor, freight and other expenses the dealer's responsibilities.

During the warranty period, the request and replacement of any defective parts must be made to the regional dealer, who will send the defective part for analysis at **BALDAN**.

When such procedure is not possible and the reseller has exhausted its resolution capacity, it will request support from **BALDAN**'s Technical Assistance, through a specific form distributed to resellers.

After analyzing the replaced items by **BALDAN**'s Technical Assistance, and concluding that it is not a warranty, then the costs related to the replacement will be the responsibility of the dealer;

as well as expenses for material, travel including accommodation and meals, accessories, used lubricant and other expenses arising from the call for Technical Assistance, and the company **BALDAN** is authorized to make the respective billing on behalf of the reseller.

Any repair made to the product that is within the warranty period by the dealer, will only be authorized by **BALDAN** upon prior presentation of a quote describing parts and labor to be performed.

This term excludes the product that undergoes repairs or modifications by officials who do not belong to the **BALDAN** dealer network, as well as the application of non-genuine parts or components to the user's product.

This guarantee will become null when it is determined that the defect or damage is resulting from improper product use, failure to follow instructions or the inexperience of the operator.

It is agreed that this warranty does not cover tires, deposits of polyethylene, cardans, hydraulic components, etc., which are equipment guaranteed by their manufacturers.

Manufacturing and or material defects, object of this warranty term, will not constitute, under any circumstances, reason for purchase and sale contract termination, or compensation of any nature.

Baldan reserves the right to change and/or improve the technical characteristics of its products, without prior notice, and without obligation to do so with previously manufactured products.

General Information

• To owner

BALDAN IMPLEMENTOS AGRÍCOLAS S/A, is not responsible for any damage caused by accident from use, transport or in improper or incorrect storage of your implement, whether by negligence and / or inexperience of anyone.

Only people who have full knowledge of the tractor and the implement must make the transport and the operation thereof

BALDAN is not responsible for any damage caused in unpredictable situations or others to implement's normal use.

Improper handling of this equipment can result in serious or fatal accidents. Before putting the equipment into operation, carefully read the instructions contained in this manual. Make sure that the person responsible for the operation is instructed in the correct and safe handling. Also make sure the operator has read and understood the product instruction manual.

⚠ ATTENTION

NR-31 - SAFETY AND HEALTH AT WORK IN AGRICULTURE, LIVESTOCK FORESTRY, LOGGING AND AQUACULTURE.

This Regulatory Standard is to establish the principles to be observed in the organization and in the workplace, consistent with planning and development of agricultural, livestock, forestry, logging and aquaculture activities with safety and health, environment of Work.

MR. OWNER OR EQUIPMENT OPERATOR.
Read and follow carefully the provisions of NR-31.

More information, visit the website and read in full the NR-31.
http://portal.mte.gov.br/legislacao/normas-regulamentadoras-1.htm

Safety Standards

- To operator

THIS SYMBOL INDICATES AN IMPORTANT SAFETY WARNING. IN THIS MANUAL, WHENEVER YOU FIND IT, CAREFULLY READ THE FOLLOWING MESSAGE AND BE AWARE OF THE POSSIBILITY OF PERSONAL INJURY.

ATTENTION

Read the instruction manual carefully for recommended safety practices.

ATTENTION

Only start operating the tractor when you are properly accommodated and with the seat belt fastened.

ATTENTION

Do not transport people on the tractor or inside or on the equipment.

ATTENTION

There is a risk of serious injury from tipping over when working on slopes. Do not use excessive speed.

ATTENTION

Do not work with the tractor if the front is without enough ballast for the rear equipment. If there is a tendency to lift, add weights or weights to the front or front wheels.

ATTENTION

Before doing any maintenance on your equipment, make sure it is properly stopped. Avoid getting run over.

ATTENTION

Be careful when handling the MOVERE support leg, as there is a risk of accidents.

Safety Standards

ATTENTION

FOLLOW ALL RECOMMENDATIONS, WARNINGS AND SAFE PRACTICES RECOMMENDED IN THIS MANUAL, UNDERSTAND THE IMPORTANCE OF YOUR SAFETY. ACCIDENTS CAN LEAD TO DISABILITY OR EVEN DEATH. REMEMBER, ACCIDENTS CAN BE AVOIDED!

ATTENTION

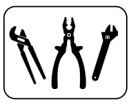

Do not make adjustments with the MOVERE in operation. When doing any work on the MOVERE, turn off the tractor first. Use proper tools.

ATTENTION

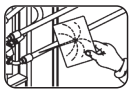

When looking for a possible leak in the hoses, use a piece of cardboard or wood, never use your hands. Avoid incising fluid into the skin.

ATTENTION

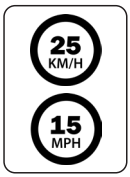

When transporting the MOVERE, do not exceed a speed of 25 km/h or 15 MPH, avoiding the risk of damage and accidents.

ATTENTION

When working with the MOVERE, do not exceed the speed of 12 km/h or 7 MPH, avoiding the risk of damages and accidents.

ATTENTION

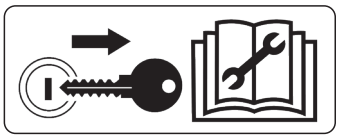

Remove the ignition key before performing any maintenance on the MOVERE. Protect yourself from possible injury or death caused by an unforeseen departure of the MOVERE.
If the MOVERE is not properly engaged, do not start the tractor.

ATTENTION

Hydraulic oil under pressure can cause serious injury if it leaks. Periodically check the condition of the hoses. If there are signs of leaks, replace immediately. Before connecting or disconnecting the hydraulic hoses, relieve the system pressure, activating the command with the tractor turned off.

▪ Safety Standards

ATTENTION

ALCOHOLIC BEVERAGES OR SOME MEDICATIONS CAN GENERATE LOSS OF REFLECTIONS AND CHANGE THE PHYSICAL CONDITIONS OF THE OPERATOR. THEREFORE, NEVER OPERATE THIS EQUIPMENT UNDER THE USE OF THESE SUBSTANCES.

ATTENTION

Always keep the access and work places clean of residues such as oil or grease, as they can cause accidents.

ATTENTION

Before starting work on or transporting the MOVERE, check it for people or obstructions.

ATTENTION

Avoid heating parts near fluid lines.
Heating can cause material fragility, rupture and release of pressurized fluid, which can cause burns and injuries.

ATTENTION

Keep the hinge area free while the MOVERE is in operation.
In sharp turns, prevent the tractor wheels from touching the header.

ATTENTION

Never weld the tire mounted wheel, the heat can cause the air pressure to build up and cause the tire to explode.
When inflating the tire, position yourself beside the tire, never in front of it. To inflate the tyre, always use a containement device (inflation cage).

ATTENTION

- Improperly disposing of waste affects the environment and ecology, as it will be polluting rivers, canals or the soil.

Find out about the correct way to recycle or dispose of waste.

PROTECT THE ENVIRONMENT!

▪ Safety Standards

• PPE Equipment

ATTENTION **DO NOT WORK WITH THE MOVERE WITHOUT PUTTING THE PPE (SAFETY EQUIPMENT) ON BEFORE. IGNORING THIS WARNING COULD CAUSE HEALTH DAMAGE, SERIOUS INJURY OR DEATH.**

When performing certain procedures with the **MOVERE**, put the following PPE (Safety Equipment) below:

IMPORTANT

The safety practice must be carried out at all stages of work with the MOVERE, thus avoiding accidents such as impact from objects, falls, noise, cuts and ergonomics; that is, the person responsible for operating the MOVERE is subject to internal and external damage to his or her body.

OBSERVATION **All PPE (Security Equipment) must have a certificate of authenticity.**

▪ Warnings

⚠ When operating the MOVERE, do not allow people to stand too close or on top of it.

⚠ When carrying out any maintenance service, use PPE equipment.

⚠ Before connecting or disconnecting the hydraulic hoses, relieve the system pressure by activating the command with the tractor turned off.

⚠ Periodically check the condition of the hydraulic hoses. If there are signs of oil leakage, replace the hose immediately, as the oil works under high pressure and can cause serious accidents.

⚠ Do not wear clothes that are too loose as they could get caught in the MOVERE.

⚠ When starting the tractor engine, be properly seated in the operator's seat and aware of complete knowledge of the correct and safe handling of both the tractor and the MOVERE. Always place the gearshift lever in the neutral position, disconnect the control gear from the power take-off and place the hydraulic controls in the neutral position.

⚠ Do not run the tractor engine indoors, without adequate ventilation, as the exhaust gases are harmful to health.

⚠ When maneuvering the tractor to the MOVERE hitch, make sure you have enough space and that no one is too close, always maneuver at idle speed and be prepared to brake in an emergency.

⚠ Do not make adjustments with the MOVERE in operation.

⚠ When working on sloping terrain, proceed with care always trying to maintain the necessary stability. In case of an out-of-balance beginning, reduce the acceleration, turn the wheels to the side of the terrain slope and never raise the MOVERE.

⚠ Always drive the tractor at speeds compatible with safety, especially when working in rough terrain or slopes, keep the tractor always engaged.

⚠ When driving the tractor on roads, keep the brake pedals interconnected.

⚠ No not work with the tractor with a light rear end. If the rear tends to lift, add more weight to the rear wheels.

⚠ When leaving the tractor, place the gearshift lever in neutral position and apply the parking brake. Never leave the MOVERE hitched to the tractor in the raised position of the hydraulic system.

⚠ Any and all maintenance on the MOVERE must be done with the same shutdown and with the tractor turned off.

⚠ Do not travel on highways, especially at night. Use warning signs throughout the route.

▪ Warnings

⚠ If there is a need to travel with the MOVERE on the highways, consult the transit agencies.

⚠ Do not allow the use of the MOVERE by people who have not been trained, that is, who do not know how to operate it correctly.

⚠ Do not transport or work with the MOVERE near obstacles, rivers or streams.

⚠ The transport of people in self-propelled machines and implements is prohibited.

⚠ Alterations of the original characteristics of the MOVERE are not authorized, as they may alter safety, functioning and affect its useful life.

⚠ Carefully read all safety information contained in this manual and in the MOVERE.

⚠ Read or explain all procedures in this manual to the operator who cannot read.

⚠ Always check that the MOVERE is in perfect working condition. In case of any irregularity that may interfere with the functioning of the MOVERE, arrange for proper maintenance before any work or transport.

⚠ The maintenance and especially the inspection in risk areas of the MOVERE, must only be done by a trained or qualified worker, observing all safety guidelines. Before starting maintenance, disconnect all drive systems from the MOVERE.

⚠ Periodically check all components of the MOVERE before using itev.

⚠ Depending on the equipment used and the working conditions in the field or in maintenance areas, precautions are necessary. Baldan has no direct control over precautions, so it is the owner's responsibility to put in place safety procedures while working with the MOVERE.

⚠ Check the recommended minimum tractor power for each MOVERE model. Only use tractor with power and ballast compatible with the load and topography of the terrain.

⚠ When transporting the MOVERE, travel at speeds compatible with the terrain and never above 25 km/h, this reduces maintenance and consequently increases the life of the MOVERE.

⚠ Alcoholic beverages or some medications can cause loss of reflexes and alter the operator's physical condition. Therefore, never operate this MOVERE under the use of these substances.

⚠ Read or explain all the procedures in this manual to the user who cannot read.

If in doubt, contact the After Sales.
Telephone: 0800-152577 / E-mail: posvenda@baldan.com.br

▪ Components

• MOVERE - Tandem Levelling Remote Control Harrow

1. Left center frame
2. Right center frame
3. Left middle frame
4. Right Intermediate frame
5. Left side frame
6. Right side frame
7. Coupling head
8. Screw jack
9. Hydraulic hoses
10. Front left side frame
11. Front left frame
12. Right front frame
13. Right front side frame
14. Left side rear frame
15. Left rear frame
16. Rear right frame
17. Rear right side frame
18. Disk
19. Finishing Disc
20. Right side axle bracket
21. Right center wheel axle frame
22. Left center wheel hub bracket
23. Left side wheel axle support
24. Cylinder of articulation of the sides
25. Wheel Articulation Cylinder
26. Cylinder of articulation of the header
27. Coupler header regulator
28. Stabilizer Shaft
29. Tire
30. Tillage roller
31. Signage plate

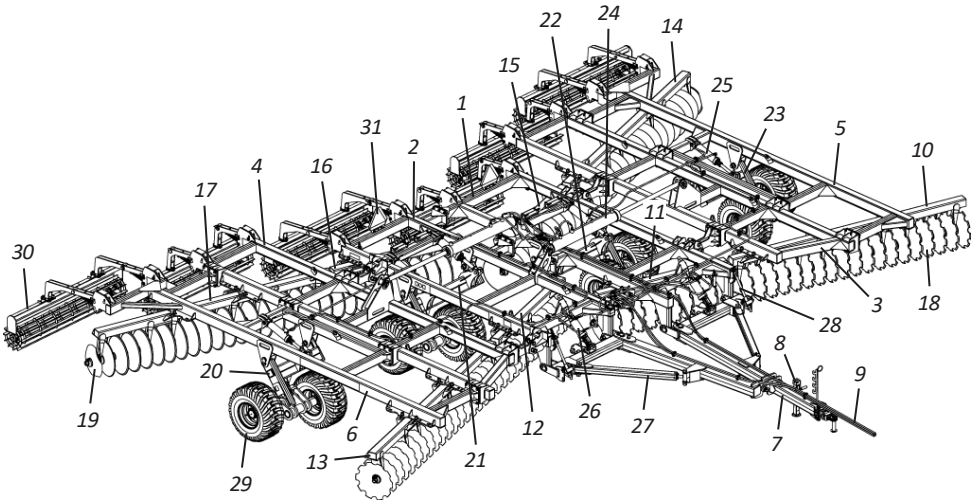

▪ Dimensions

• MOVERE 88 Discs

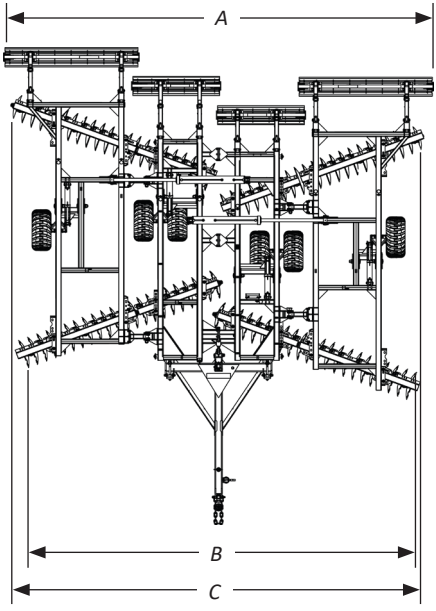

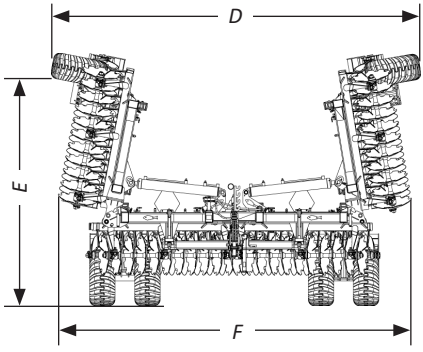

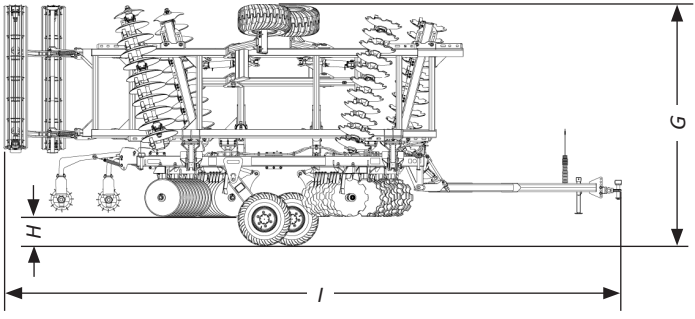

Nr of Discs	Measure A (mm)	Measure B (mm)	Measure C (mm)	Measure D (mm)	Measure E (mm)	Measure F (mm)	Measure G (mm)	Measure H (mm)	Measure I (mm)
88	9013	8315	8824	5457	3557	5472	3920	470	10025

Dimensions

- **MOVERE 108 Discs**

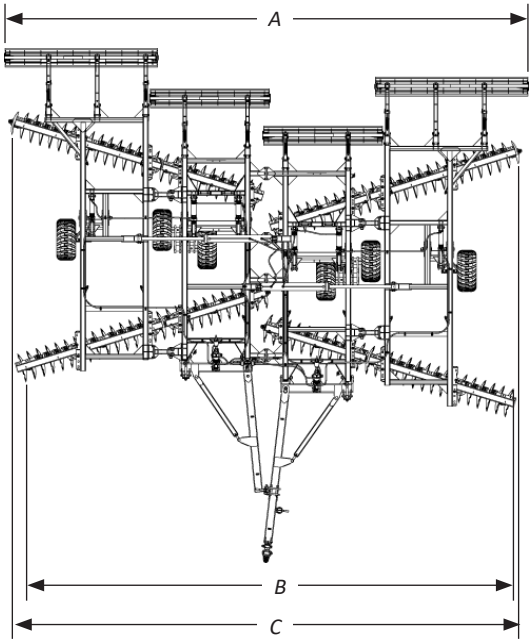

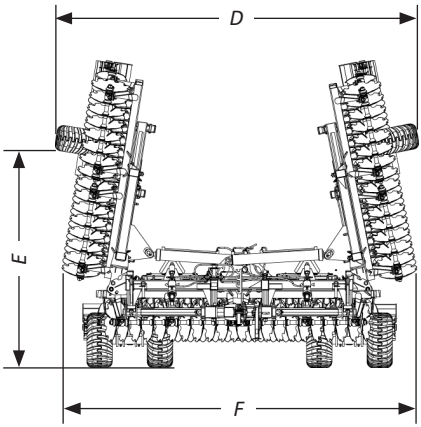

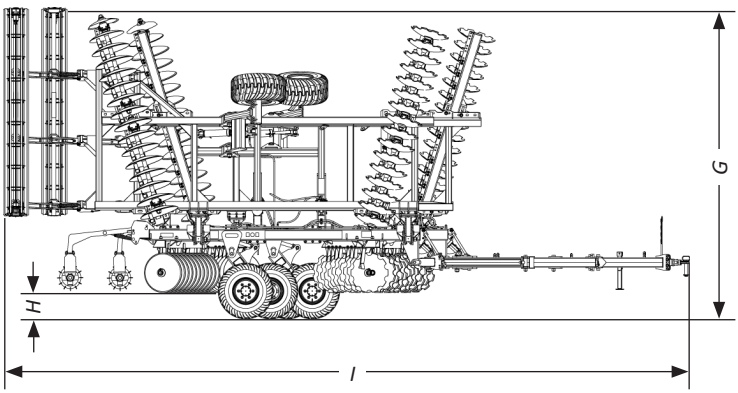

Nr of Discs	Measure A (mm)	Measure B (mm)	Measure C (mm)	Measure D (mm)	Measure E (mm)	Measure F (mm)	Measure G (mm)	Measure H (mm)	Measure I (mm)
108	11023	10253	10628	5815	3391	5573	4785	405	10702

▪ Dimensions

• MOVERE 124 Discs

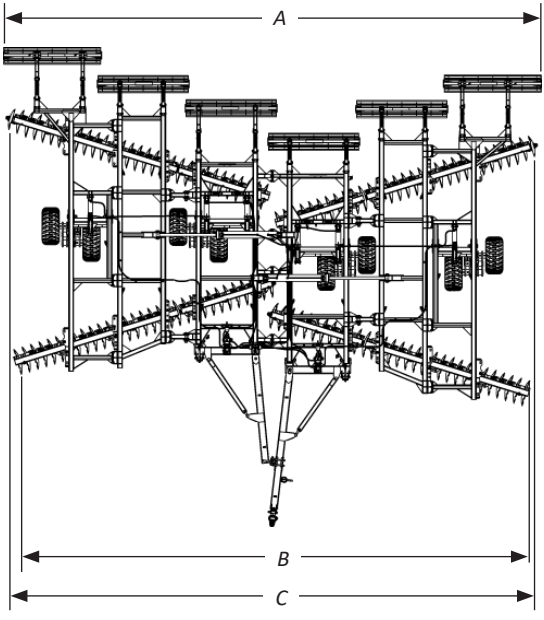

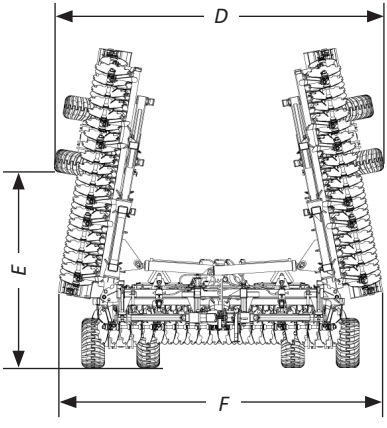

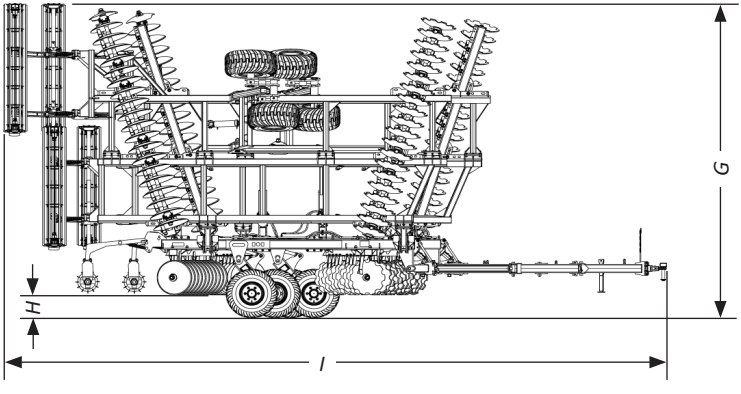

Nr of Discs	Measure A (mm)	Measure B (mm)	Measure C (mm)	Measure D (mm)	Measure E (mm)	Measure F (mm)	Measure G (mm)	Measure H (mm)	Measure I (mm)
124	12503	11815	12161	5815	3376	5591	5440	406	11067

▪ Specifications

• MOVERE - Tandem Leveling Remote Control Harrow

Model	Nr of Discs	Disc spancing (mm)	Disc diameter (ø)	Concave discs (mm)	Shaft diameter (ø)	Working width (mm)
MOVERE	88	200	22” - 24”	5,0	1.1/2”	8315
	108	200	22” - 24”	5,0	1.1/2”	10253
	124	200	22” - 24”	5,0	1.1/2”	11815

Model	Nr of Discs	Max Depth of work (mm)		Approximate weight w/roller (Kg)		Tractor power (HP)	Tire	
		22”	24”	22”	24”		Quantity	Model
MOVERE	88	168	194	9112	9330	310 to 350	06	400x60
	108	168	194	10000	10275	380 to 430	06	400x60
	124	168	194	12270	12575	430 to 496	08	400x60

Adjusting the discs crossing .....03 positions
Recommended maximum working speed..... 12km/h
Recommended maximum transport speed 25km/h
Opening angle of disc frames..... 14° - 17° - 20°

Baldan reserves the right to modify and or improve the technical characteristics of its products without notice and without obligation so to proceed with the products previously manufactured. The technical specifications are approximate and informed in normal working conditions.

INTENDED USE OF MOVERE

- **MOVERE** was developed exclusively for soil preparation work in large areas, breaking of clods and leveling after harrowing.
- **MOVERE** must be driven and operated only by a properly instructed operator.

PROHIBITED USE OF MOVERE

- To avoid damage, serious accident or death, DO NOT transport people over any part of **MOVERE.**
- It is FORBIDDEN to use **MOVERE** to attach, tow or push other implements or accessories.
- **MOVERE** should NOT be used by an inexperienced operator who does not know all the driving, command and operation techniques.

▪ Assembly

MOVERE leaves the factory disassembled. To mount it, follow the instructions below:

⚠**MOVERE** assembly must be made by resellers, using trained personnel, able and qualified for this work.

⚠Before starting the assembling of **MOVERE**, find an ideal place where you can easily identify parts and assemble them.

⚠Do not wear loose clothing, as they may get stuck in **MOVERE**.

▪ Assembly

• Assembly of the section of discs

When you start **MOVERE**, always start with the set of discs for this, proceed as follows:

01 - Place on shaft (1) the concave thrust washer (2), the lock (3), nut (4), fixing it with the screw (5), lock washer (6) and nut (7).

02 - Then put on shaft (1) the disc (8), bearing (9), another disc (8), separator spool (10) and so on.

03 - When the set is complete with all the discs, bearings, separator spools, place the convex thrust washer (11), the lock (12), nut (13), tightening with the wrench until the whole set is firm.

04 - Once this is done, wedge the set of discs and tighten the nut (13) by means of impacts. When reaching maximum tightening, adjust the lock (12) with the convex washer (11), always tightening the nut until the drilling coincides, fix it with the screw (14), pressure washer (15) and screw (16).

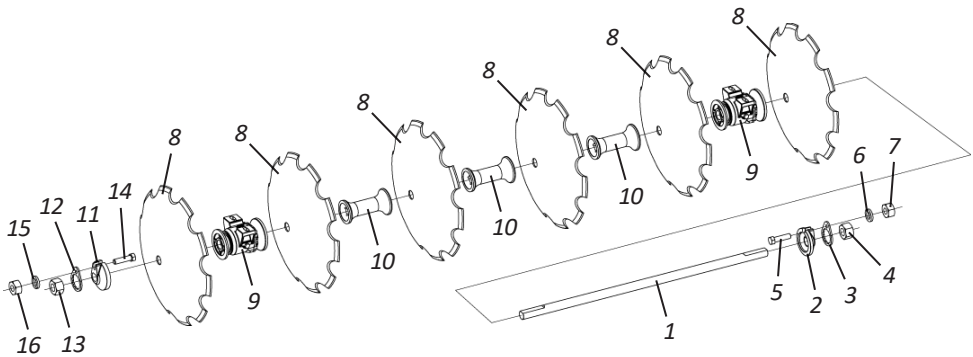

⚠ ATTENTION **Check the right side of the separating spools and the bearings according to the concavity of the discs.**

▪ Assembly

• Assembly the finishing disc

To mount the finishing disc, proceed as follows:

01 - Place on shaft (1) the concave thrust washer (2), the lock (3), nut (4), fixing it with the screw (5), lock washer (6) and nut (7).

02 - Then put on shaft (1) the disk (8), bearing (9), another disk (8), separator spool (10) and so on until the bearing (11) and the finishing disk (12) are placed.

03 - When the assembly is complete with all the discs, bearings, separator spools, place the convex thrust washer (13), the lock (14), the nut (15), tightening with the wrench until the whole assembly is firm.

04 - Once this is done, wedge the set of discs and tighten the nut (15) by means of impacts. When reaching maximum tightening, adjust the lock (14) with the convex washer (13), always tightening the nut until the drilling coincides, fix it with the screw (16), pressure washer (17) and screw (18)

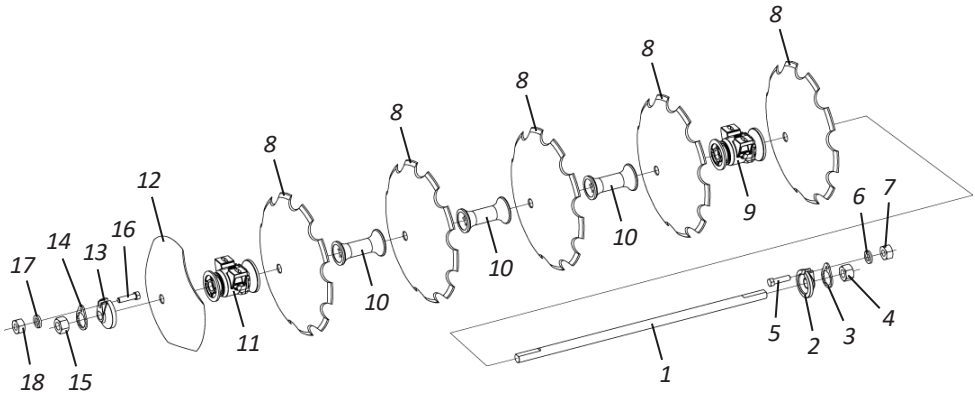

⚠ ATTENTION **Check the right side of the separating spools and the bearings according to the concavity of the discs.**

▪ Assembly

• Assembly the disc sections - MOVERE 88 discs

See below the assembly of the disc sections of the **MOVERE** 88 discs.

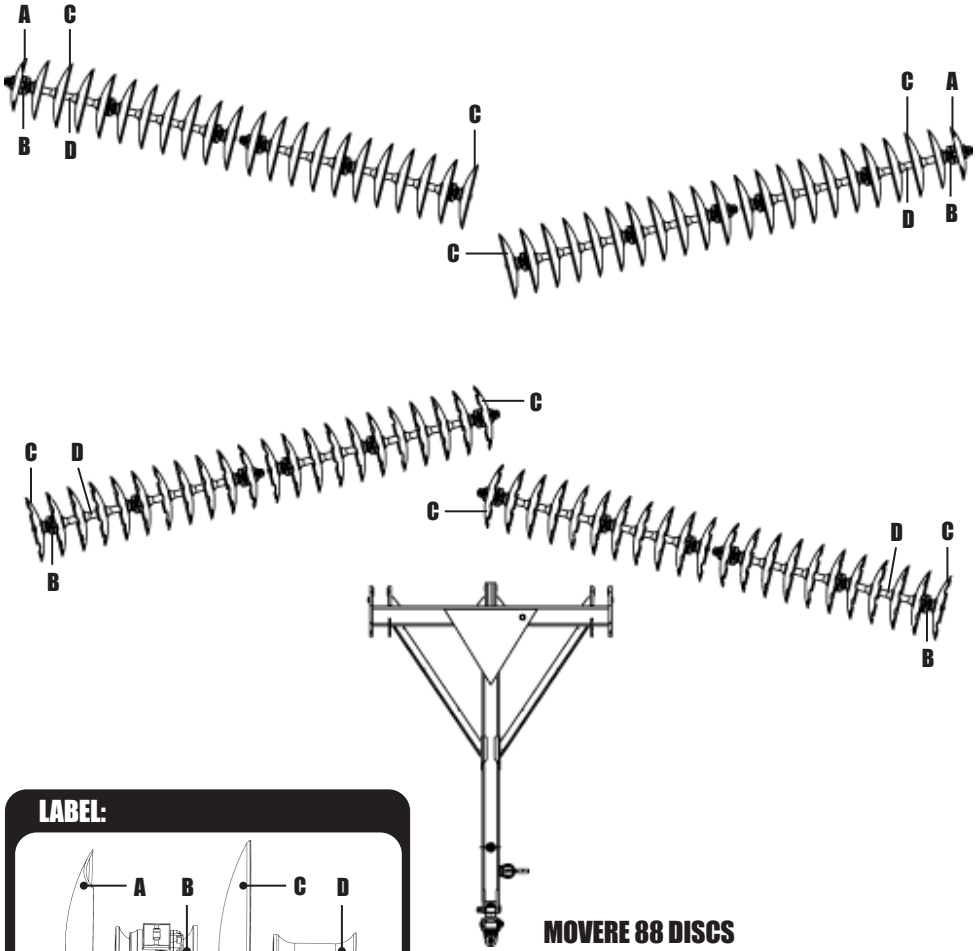

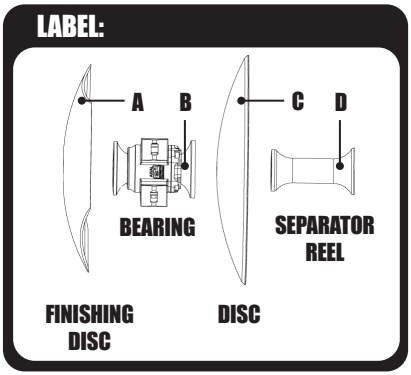

▪ Assembly

• Assembly the disc sections - MOVERE 108 discs

See below the assembly of the disc sections of the **MOVERE** 108 discs.

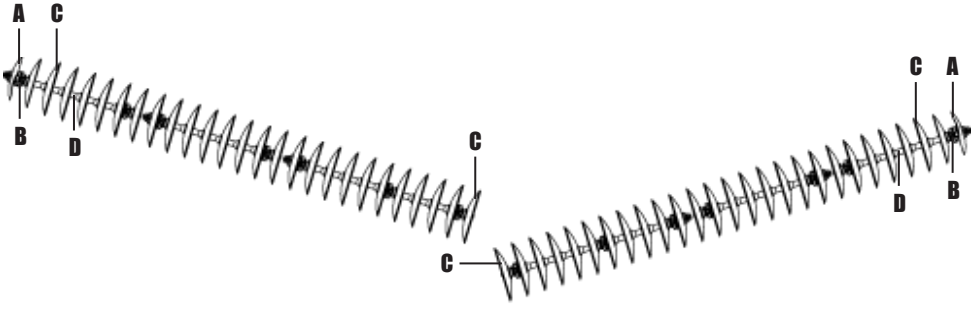

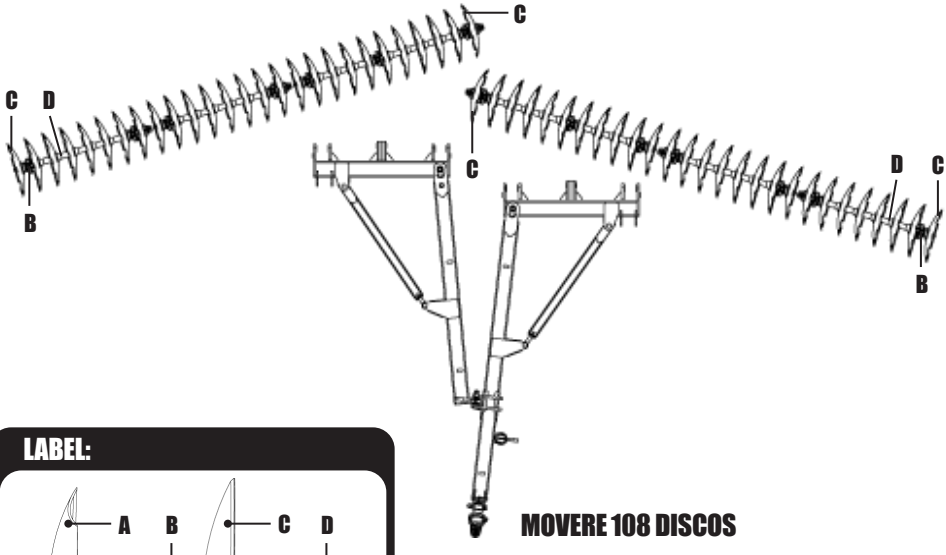

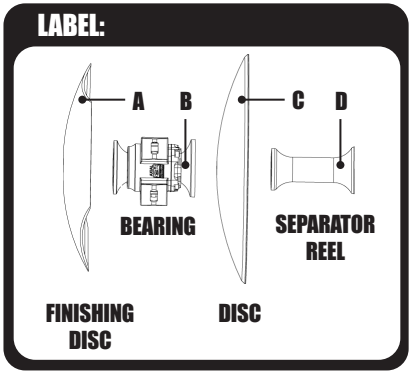

▪ Assembly

• Assembly the disc sections - MOVERE 124 discs

See below the assembly of the disc sections of the **MOVERE** 124 discs.

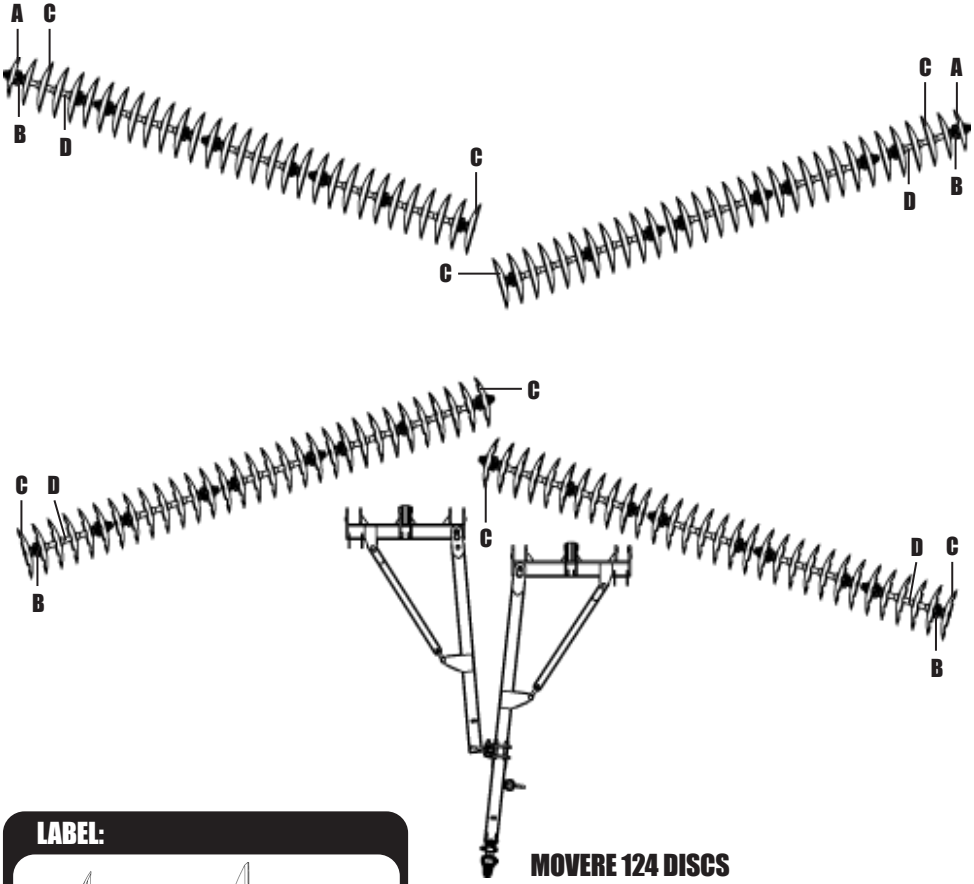

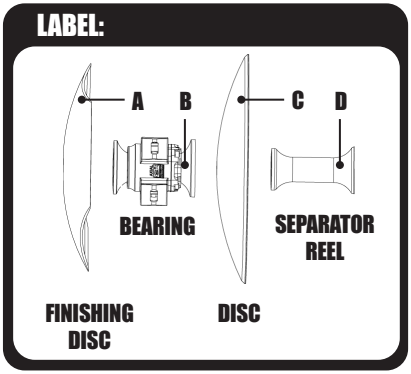

▪ Assembly

• Assembly the frames in the left center frame

Start the assembly of **MOVERE** by the left central frame, for this, proceed as follows:

01 - Place the front (1) and rear (2) frames in a clean, flat location.

02 - Then put the amount (3) on the front (1) and rear (2) frames, fixing them through the screw (4), lock (5), flat washer (6), lock washer (7) and nut (8).

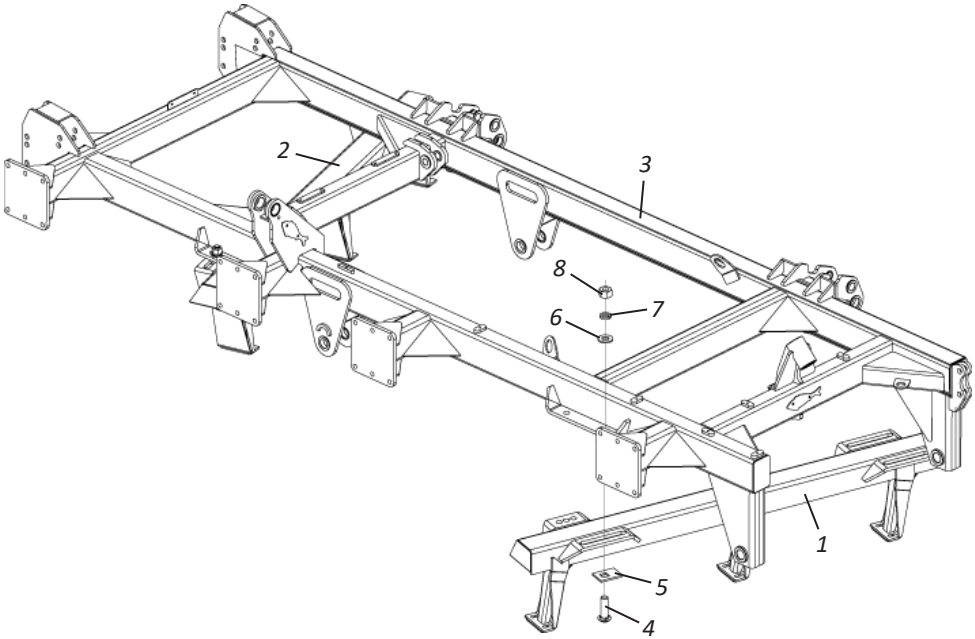

NOTE **Repeat the above procedure for mounting the frames in the center right frame.**

▪ Assembly

• Assembly the disc sections on the central frames

After fixing the frames (1) to the upright (2), secure the disc sections (3) to this, proceed as follows:

01 - Lift the front or rear of the grid and place the disc section (3) in line and match the drilling of the shoes (4) with those of the bearings andsecure them with screws (5), plain washers (6), nuts and locknuts (7).

02 - Then, lift the other part of the grill and repeat the operation by checking the concavity of the disks from one section to the other that should be opposite.

03 - When completing the assembly, make sure that the shoes (4) face the discs' concavity.

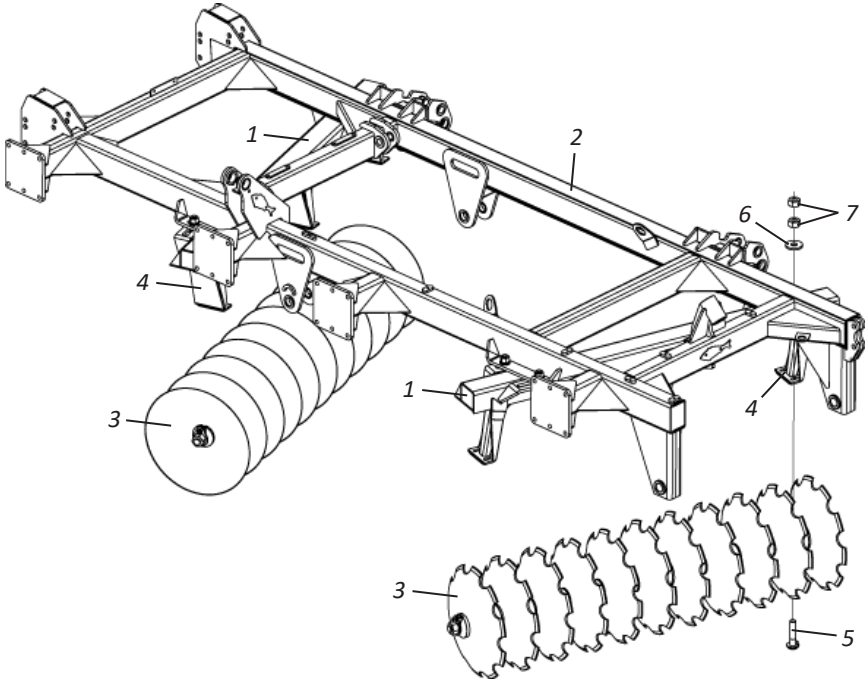

ATTENTION **When assembling the disc sections on the frames, note that the frame shoes should face the discs' concavit**

NOTE **Repeat the above procedure for assembling the disc sections in the right-center uprights.**

▪ Assembly

• Assembly the left and left side intermediate uprights and the frames

Then mount the left-hand upright (1) on the left-hand side upright (2) to do this, proceed as follows:

01 - Attach the left-hand upright (1) to the left-hand upright (2) by fastening it through the bolts (3), plain washers (4), lock washers (5) and nuts (6).

02 - Then, place the front (7) and rear (8) frames in a clean, flat location.

03 - Then attach the uprights (1 and 2) over the front (7) and rear (8) frames by securing them through the screw (9), lock (10), flat washer(11), washer (12), and nut (13).

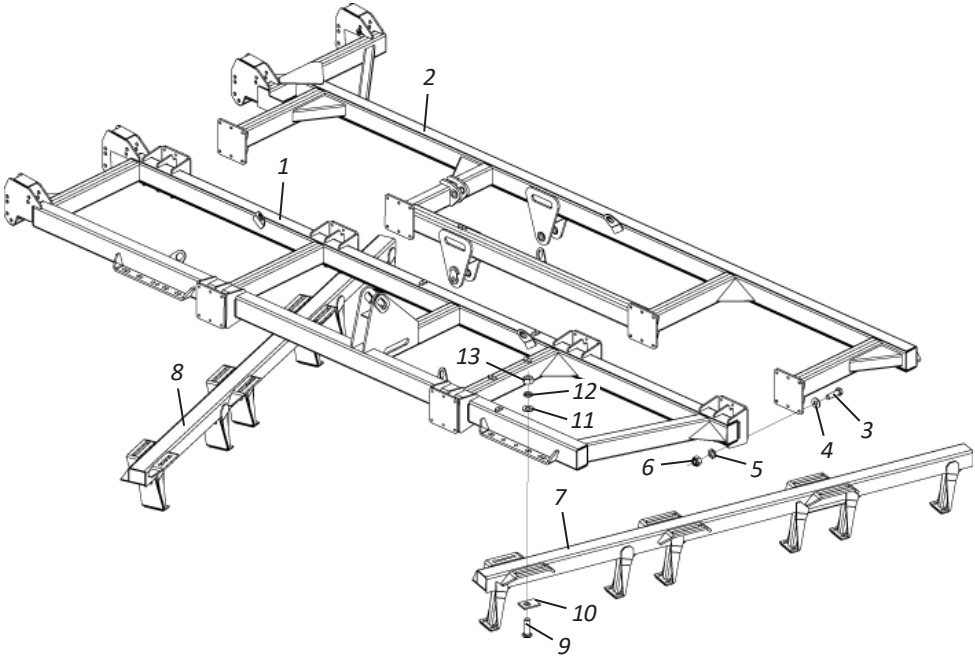

NOTE **Repeat the above procedure for assembling the right-hand upright, the right-hand upright and the frames on the uprights.**

▪ Assembly

• Assembly of the disc sections on the frames of the left intermediate a left side

After fixing the frames (1) to the upright (2), secure the disc sections (3) to this, proceed as follows:

01 - Lift the front or rear of the grid and place the disc section (3) in line and match the drillingof the shoes (4) with those of the bearings and secure them with screws (5), plain washers (6),nuts and locknuts (7).

02 - Then, lift the other part of the grill and repeat the operation by checking the concavity of the disks from one section to the other that should be opposite.

03 - When completing the assembly, make sure that the shoes (4) face the discs' concavity.

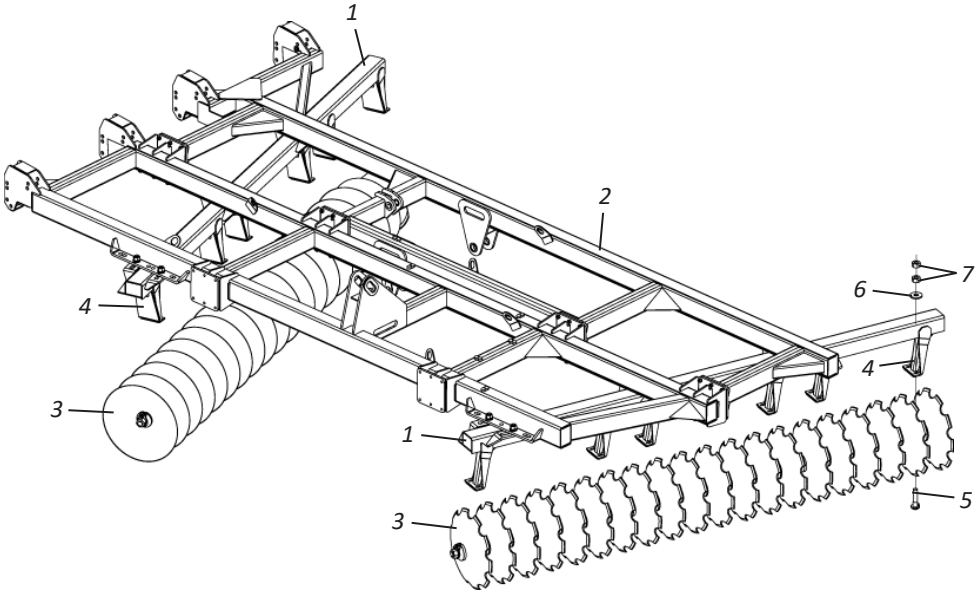

ATTENTION **When assembling the disc sections on the frames, note that the frame shoes should face the discs' concavity.**

NOTE **Repeat the above procedure for mounting the disc sections on the right side uprights.**

▪ Assembly

• Assembly of the cleaners

After assembling the disc sections in the frames, fix the wiper blades (1) to do so, proceed as follows:

01 - Place the wiper blades (1) on the frames (2), using flat washers (4), lock washers (5) and nuts (6)using the screws (3).

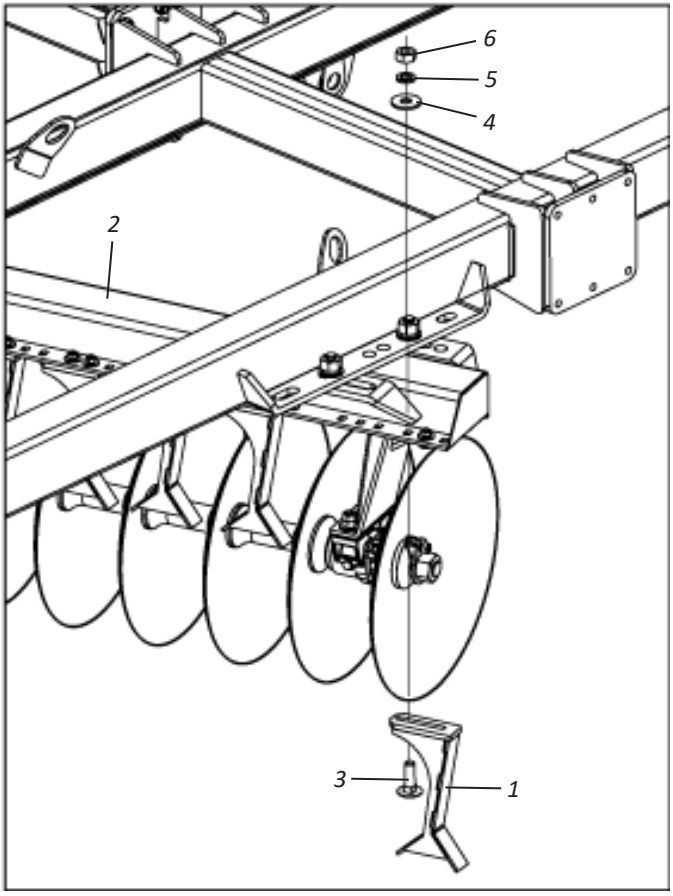

ATTENTION **When assembling the cleaners, they should be 0.5 to 1.0 cm away from the disks.**

▪ Assembly

• Assembly the right center bracket of the wheel axle

To mount the right center bracket of the wheel spindle (1), proceed as follows:

01 - Attach the right wheel hinge bracket (2) to the right center bracket of the wheel axle (1) and install the shaft (3).

02 - Then, lock the shaft (3) through the bushings (4), bolt (5), nut and locknut (6).

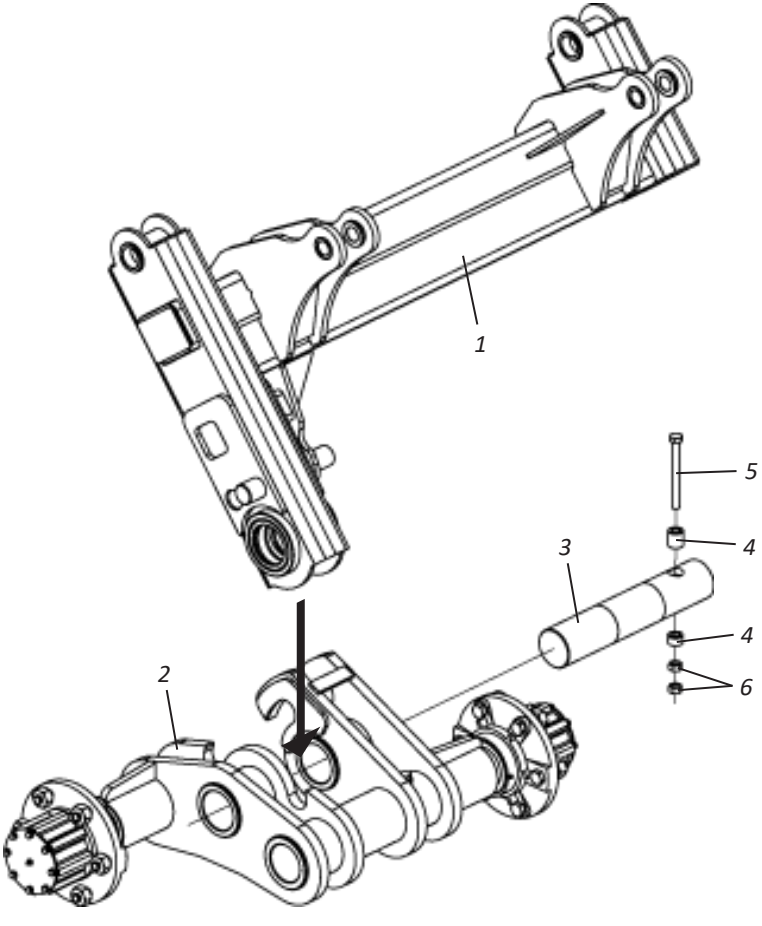

NOTE **Repeat the above procedure for mounting the left center bracket and the right and left side brackets of the wheel axle.**

▪ Assembly

• Assembly the left center bracket of the wheel axle on the frame

After mounting the center and side brackets, fix the left center bracket of the wheel axle (1) upside down to do this, proceed as follows:

01 - Attach the left center bracket of the wheel spindle (1) upright (2) through the pins (3), lock washers (4) and nuts (5).

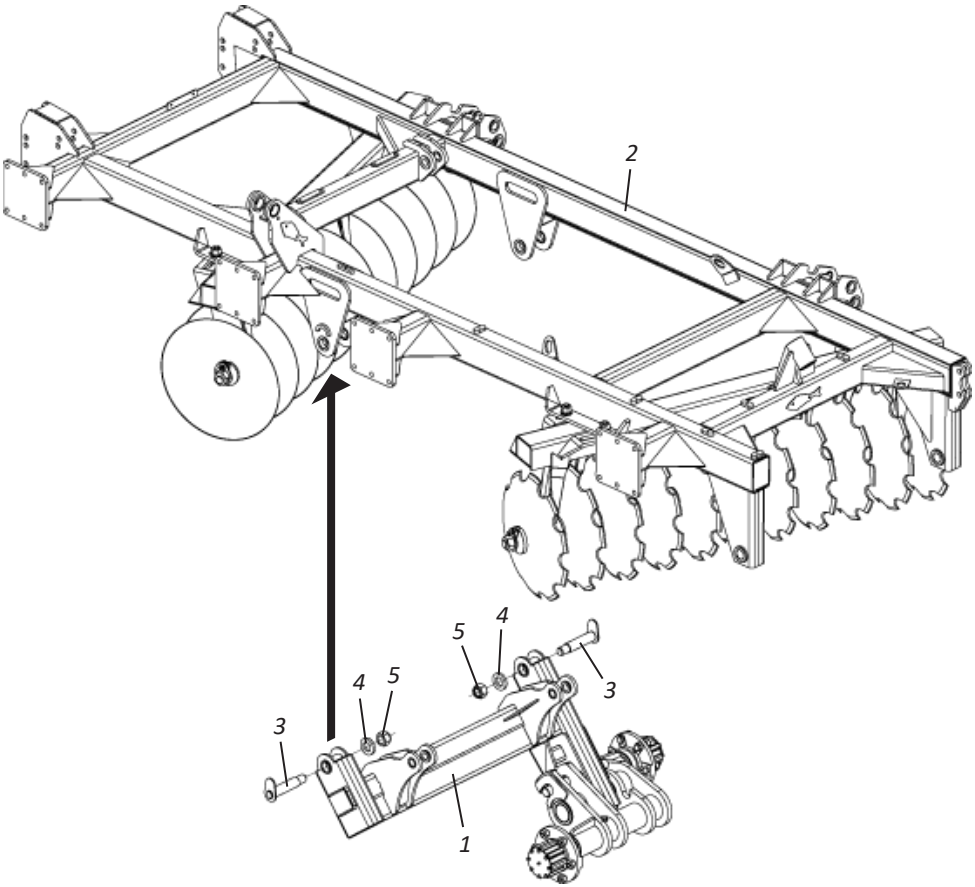

NOTE **Repeat the above procedure for mounting the right center bracket and the right and left side brackets of the wheel axle on the upright.**

▪ Assembly

• Assembly of tyres

After assembling the central and lateral supports, fix the tyres (1) for this purpose, proceeding as follows:

01 - Attach the tires (1) to the left center bracketof the wheel axle (2) through the bolts (3) and nuts (4).

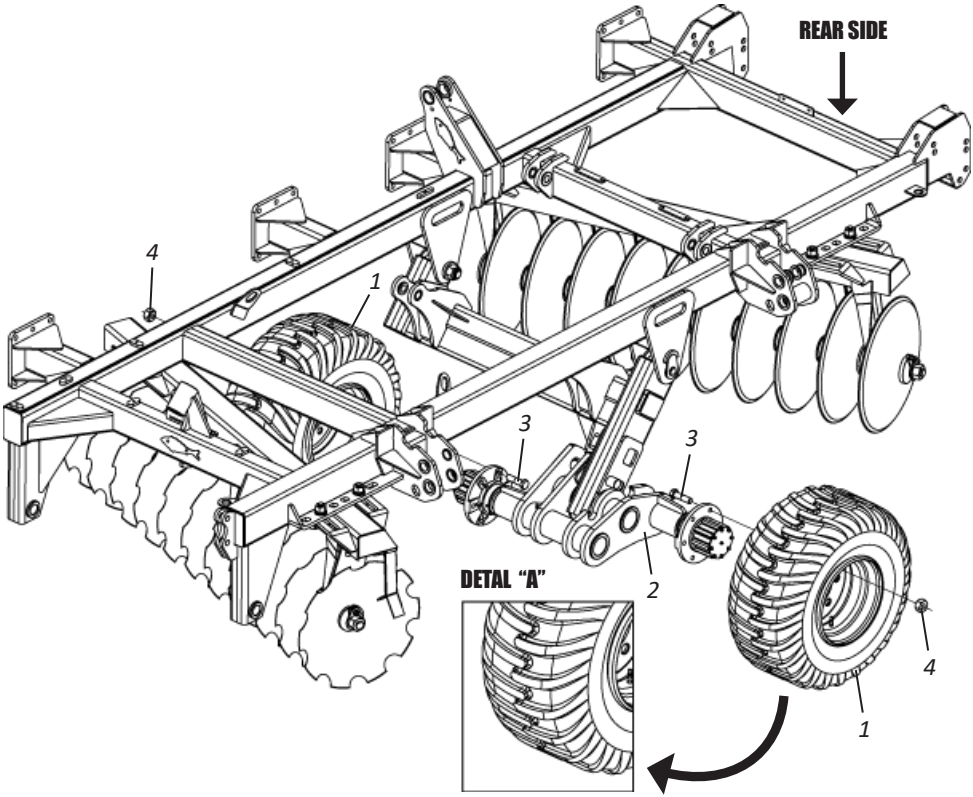

ATTENTION All tires must be mounted with anti-traction, that is to say, with the forks facing the front of MOVERE as shown in detail "A".

NOTE Repeat the above procedure for mounting the tires on the right center bracket and on the right and left side brackets of the wheel axle.

▪ Assembly

• Assembly the frames union bracket

After mounting the tires, lock the central pillar (1) on the intermediate pillar (2) to do so, proceed as follows:

01 - Attach the frames union bracket (3) between the right center post (1) and the left center post (2) through the pin (4) flat washer (5) and the nut (6), **as shown in detail "A".**

02 - Then insert the bolts (7) lock washers (8) and nuts (9), **as shown in detail "B".**

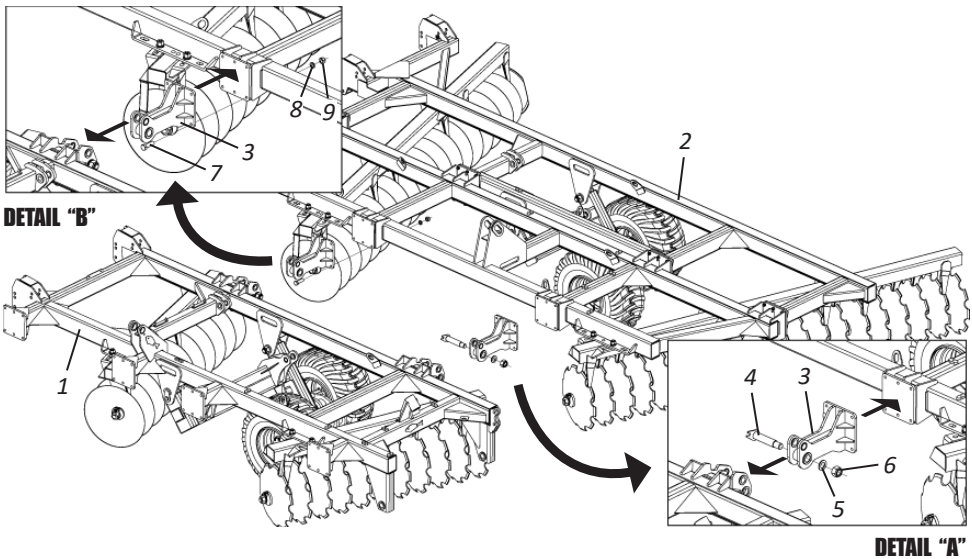

ATTENTION **When working or transporting MOVERE, it must be provided with the coupling brackets (3) mounted on the back and front. DO NOT work or transport MOVERE with only one assembled mounting bracket, avoiding risks of accident or damage to MOVERE.**

NOTE **Repeat the above procedure to mount the lock on the center right and middle right brackets.**

▪ Assembly

• Assembly of the coupling header - MOVERE 88 discs

To assemble the coupling header, proceed as follows:

01 - Attach the coupling header (1) to the upright (2), fixing through the pins (3), flat washers (4) and nuts (5).

02 - Then, attach the rod (6) to the rod support (7), spring back (8), flat washer (9) and nuts (10).

03 - Then, fix the rod base (6) to the upright (2) through the pin (11), flat washer (12) and cotter pin (13) and fix the rod support (7) to the coupling header (1) through the screws (14) and nuts (15).

04 - Then, fix the regulator (16) to the upright (2) using the flat washers (17) and nuts (18).

05 - Finish by fixing the hose support (19) on the coupling header (1) through the nut (20).

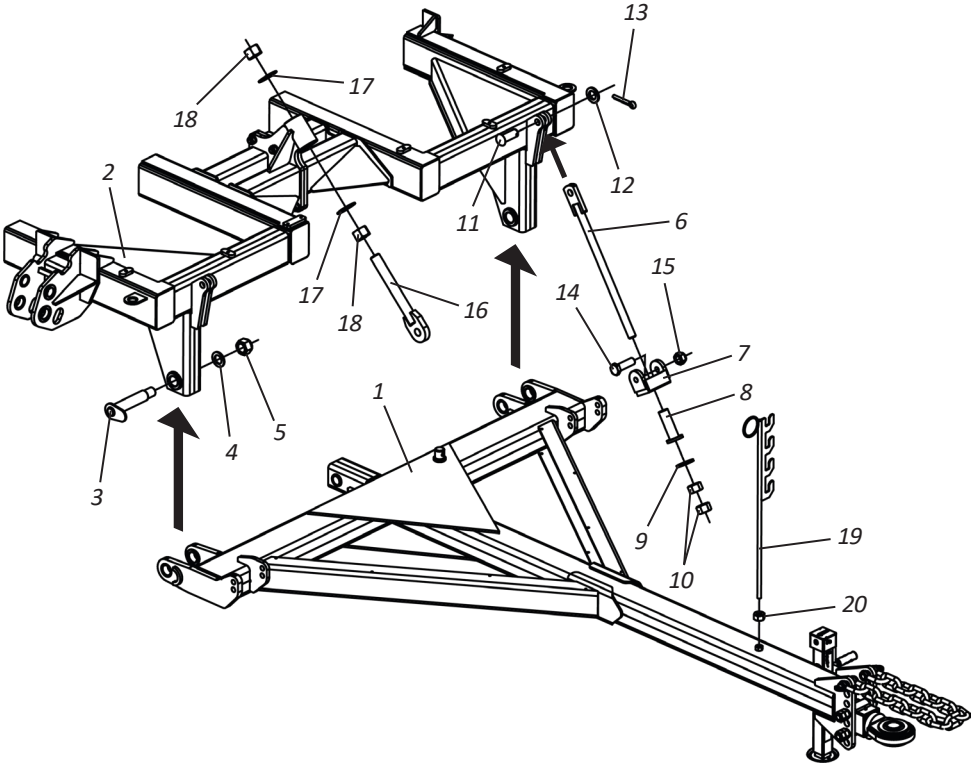

▪ Assembly

• Assembly of the coupling header - MOVERE 108 and 124 discs

To assemble the coupling header, proceed as follows:

01 - Engage the right transverse bar (1) in the center right frame (2) through the pins (3), plain washers (4) and nut (5).

02 - Then, engage the left transverse bar (6) in the left center (7) through the pins (8), plain washers (9) and the nut (10).

03 - Then, attach the header attachment bar (11) to the right crossbar (1) through the pin (12),flat washer (13) and nut (14).

04 - Then, attach the header (15) to the left transverse bar (6) through the bolt (16), plain washer (17) and nut (18).

05 - Lock the header (15) on the union bar of the header (11) through the pin (19), nut (20) and washer (21) and bolt (22).

06 - Then, install the adjusters (23), securing them through the bolts (24), pressure washers (25), nuts (26).

07 - Then, secure the support 27 through the screw 28 and nut 29 and place the bushing 30 on the rod 31, securing with the pin 32 a flat washer 33, cotter pin (34), plain washers (35) and nuts (36).

08 - Then attach the rod (37) and secure with the plain washers (38) and nuts (39).

09 - Finish by placing the nut (40) and the hose support (41).

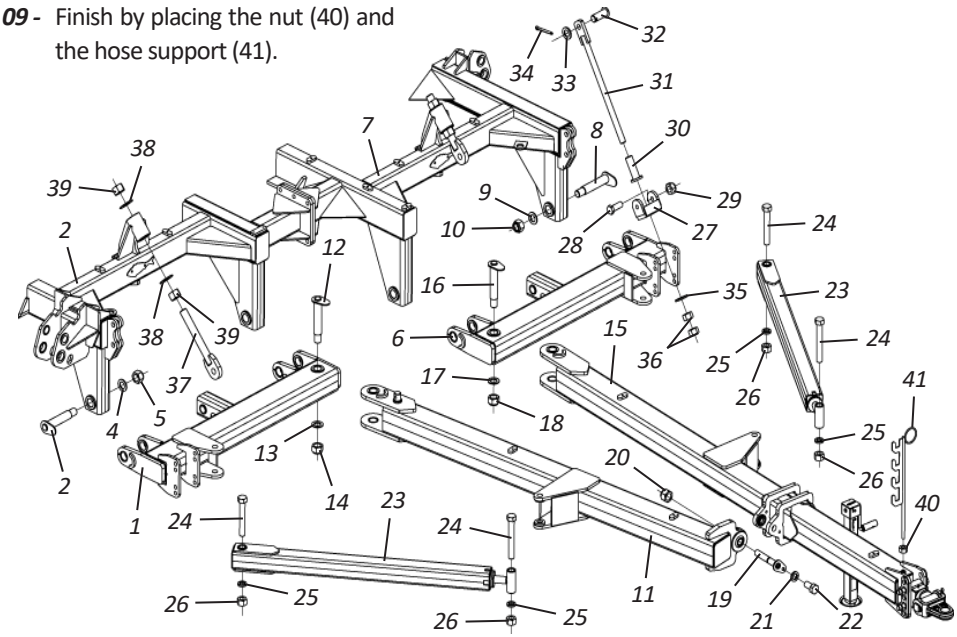

▪ Assembly

• Assembling of the hidraulic cylinders in the coupling header - MOVERE 88 discs

To mount the hydraulic cylinders in the coupling header, proceed as follows:

01 - Place the articulation support (1) on the coupling header (2) fixing through the pin (3), flat washer (4), castle nut (5) and cotter pin (6).

02 - Then, attach the base of the hydraulic cylinder (7) to the regulator (8) fixing through the pin (9), washer (10) and cotter pin (11).

03 - Then, attach the hydraulic cylinder rod (7) to the articulation support (1), through the pin (12), pressure washer (13) and screw (14).

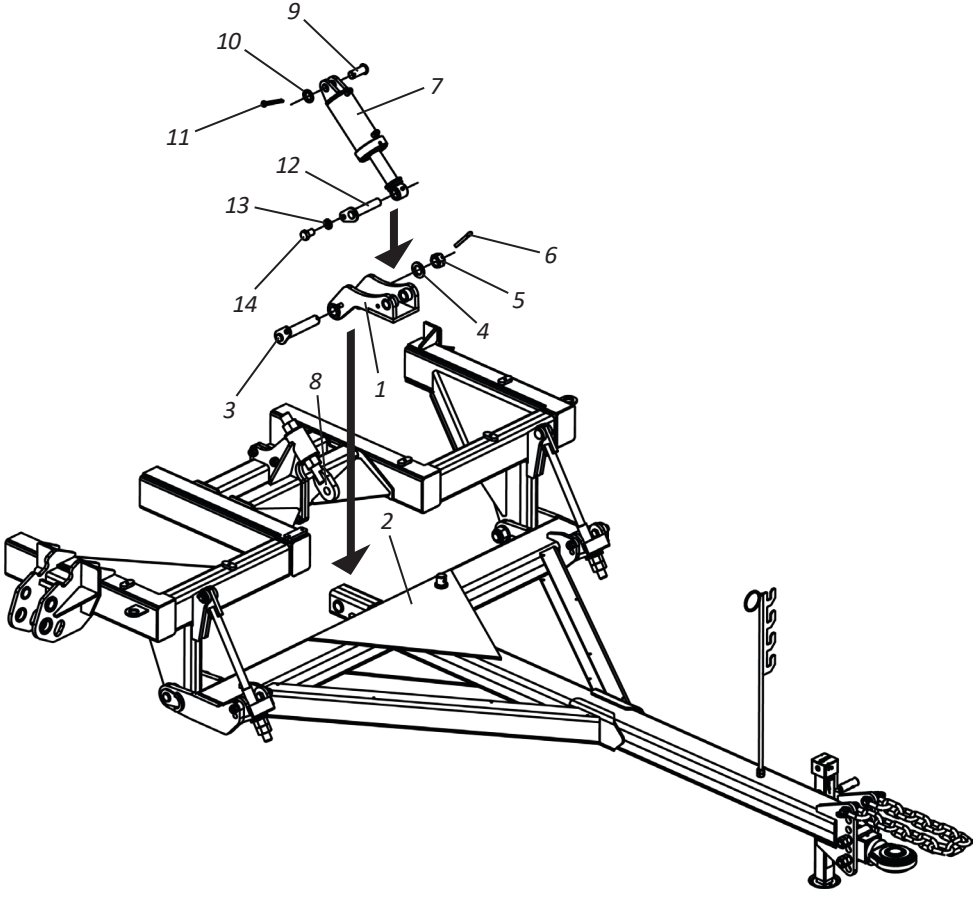

▪ Assembly

• Assembly of the hydraulic cylinders in the coupling header - MOVERE 108 and 124 discs

To assembly the hydraulic cylinders in the coupling header, proceed as follows:

01 - Attach the pivot brackets (1) to the crossbars (2) by fastening with pins (3), plain washer (4), castle nut (5) and cotter pin (6).

02 - Then, attach the hydraulic cylinder bases (7) to the adjusters (8) through the pins (9),plain washer (10) and cotter pin (11).

03 - Then, attach the rods of the hydraulic cylinders (7) to the hinge brackets (1) through the pins (12), lock washers (13) and screws (14).

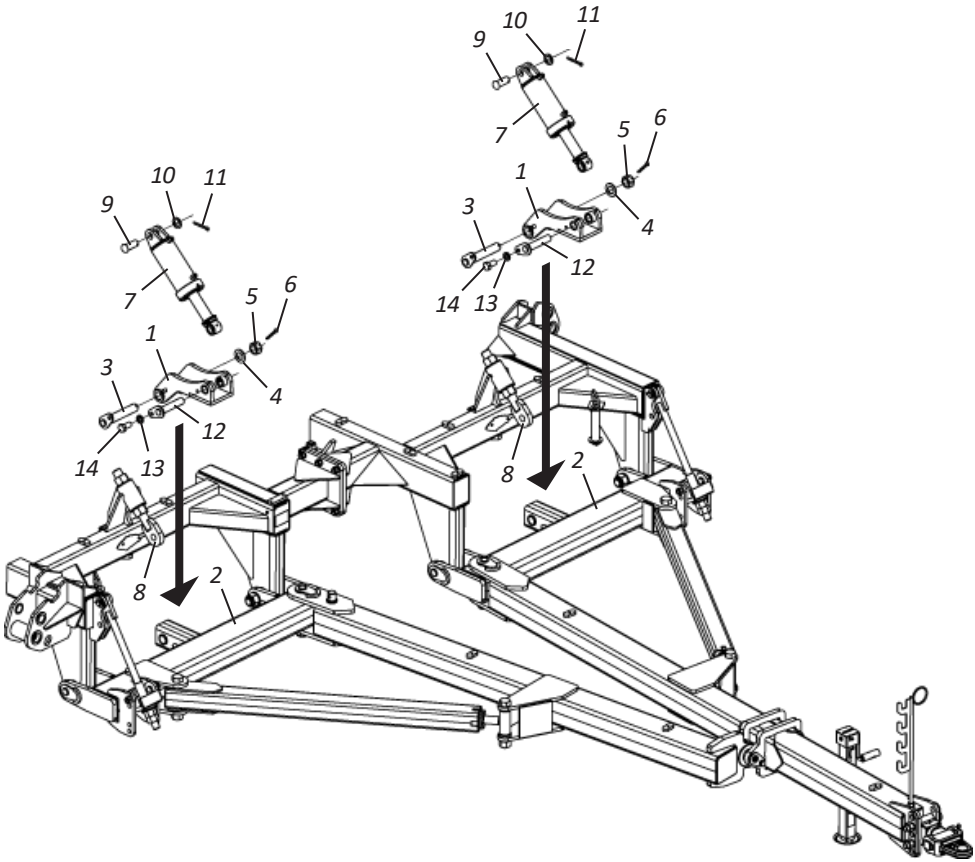

▪ Assembly

• Assembly the hydraulic cylinders on the uprights

To assembly the hydraulic cylinders to the uprights, proceed as follows:

01 - Attach the base of the hydraulic cylinder (1) to the point “A”, attaching through pin (2), washer (3), bolt (4) and the piston rod (1) at the point “B”, through the pin (5), plain washers (6)and cotter pins (7).

02 - Then, attach the base of the hydraulic cylinder (8) to the point “C”, attaching to pin (9), plain washers (10), cotter pin (11) and the rod of the hydraulic cylinder (8) at the point “D”, through the pin (12), flat washer (13) and cotter pin (14).

03 - Then, attach the base of the hydraulic cylinder (15) to the point “E”, attaching through the pin (16), plain washers (17), cotter pin (18) and the rod of the hydraulic cylinder (15) at the point“F”, through the pin (19), washer (20) and cotter pin (21).

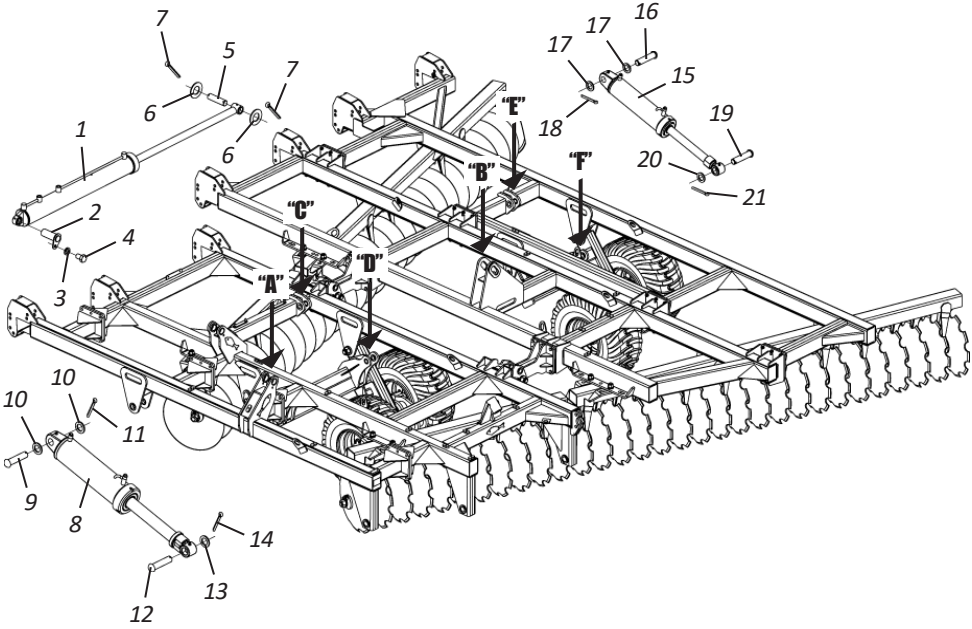

NOTE **Repeat the above procedure to mount the hydraulic cylinders in the center right, middle right and right side posts.**

▪ Assembly

• Assembly the tillage rollers

To assembly the tillage rollers to the uprights, proceed as follows:

01 - Attach the brackets (1) to the upright (2) by fastening with the pins (3), plain washers (4), cotter pins (5).

02 - Then, secure the screwdriver roller (6) to the brackets (1) through the bolts (7) and the bolts (8), lock washers (9) and nuts (10).

03 - Then, place the pins (11) on the brackets (1) by locking them through the plain washers (12) and cotter pin (13).

04 - Then attach the forks (14) on the pins (11) through the nuts and locknuts (15), engage one end of the springs (16) on the forks (14) through the pins (16), nuts (17) and cotter pins (18) and the other end of the fashions (16) on the upright (2) by fixing through the pins (19), flat washers (20) and cotter pins (21).

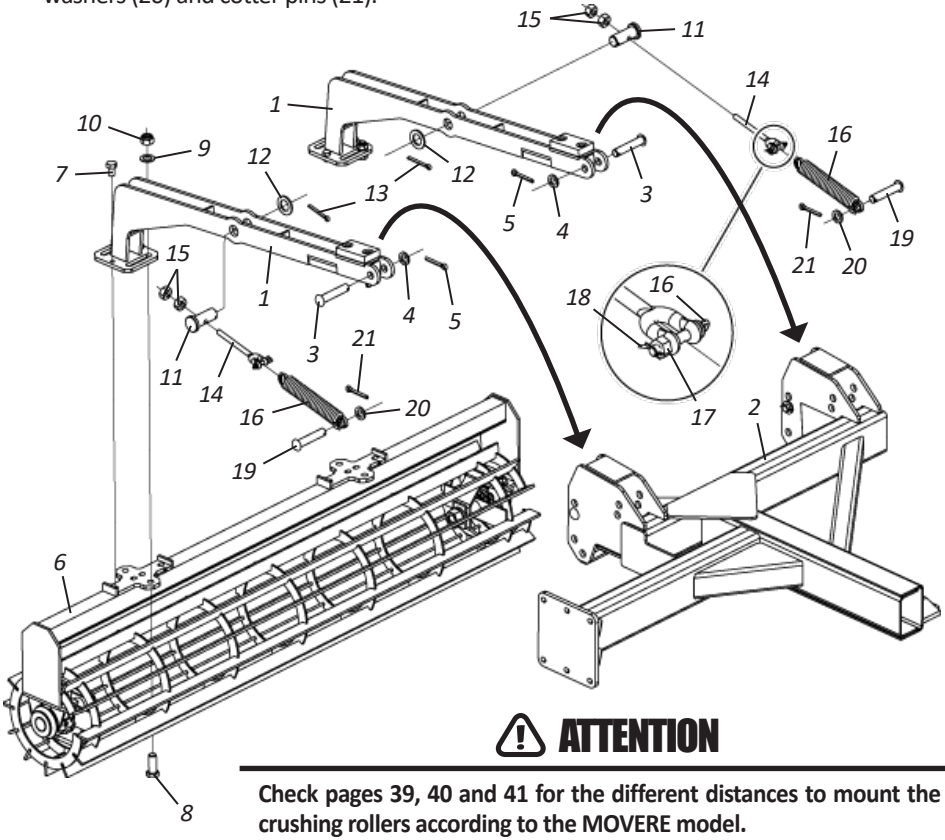

ATTENTION

Check pages 39, 40 and 41 for the different distances to mount the crushing rollers according to the MOVERE model.

▪ Assembly

- Assembly the tillage rollers - MOVERE 88 discs

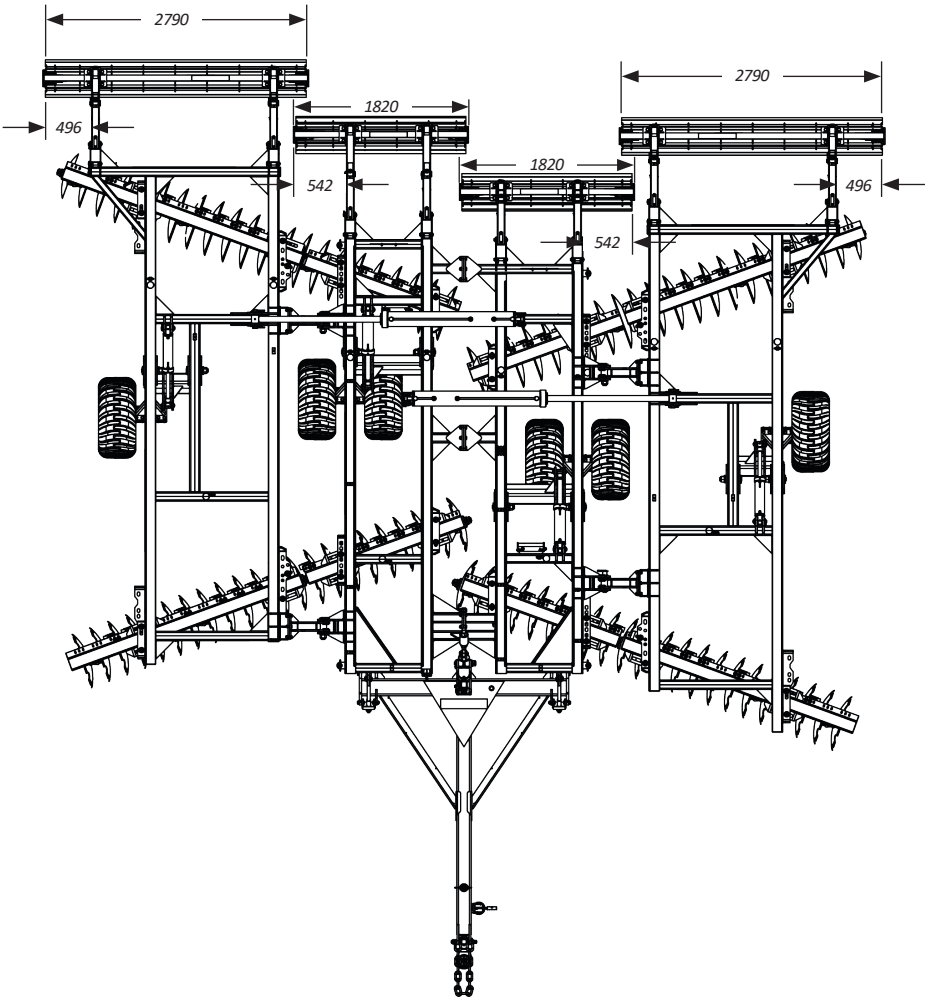

ATTENTION For the perfect functioning of the crushing rollers, when assembling them, respect the measures above.

▪ Assembly

- **Assembly the tillage rollers - MOVERE 108 discs**

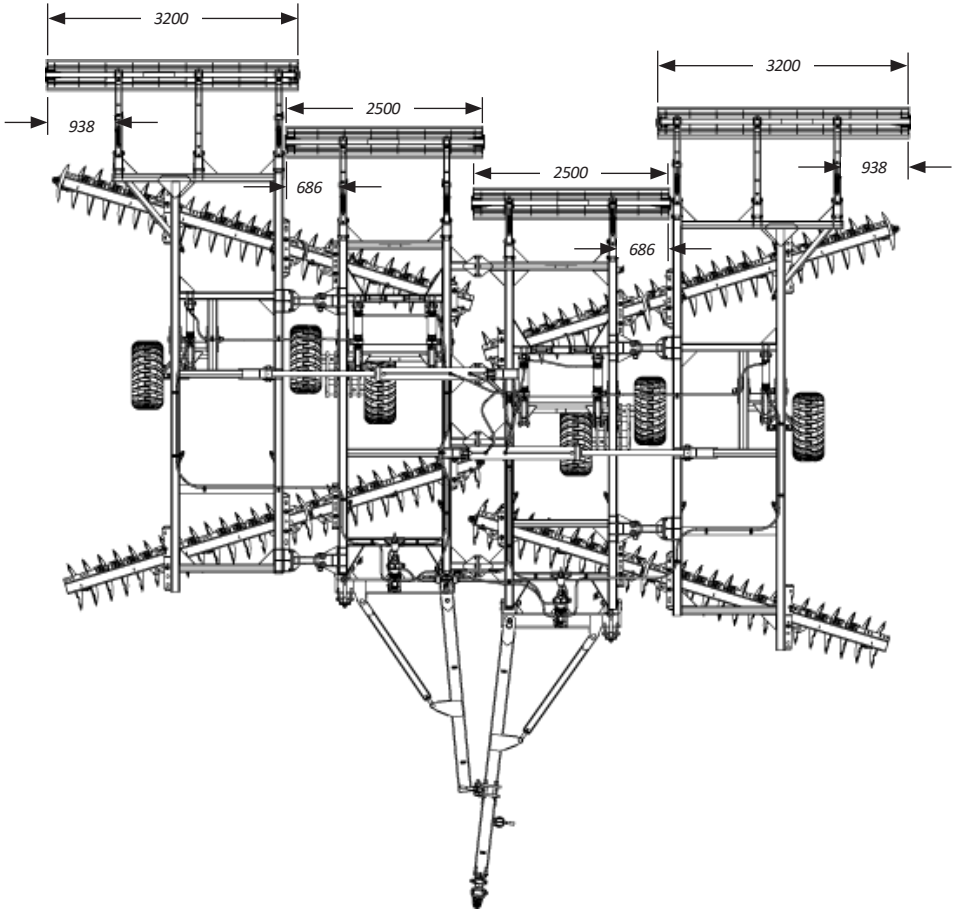

ATTENTION For the perfect functioning of the crushing rollers, when assembling them, respect the measures above.

▪ Assembly

- Assembly the tillage rollers - MOVERE 124 discs

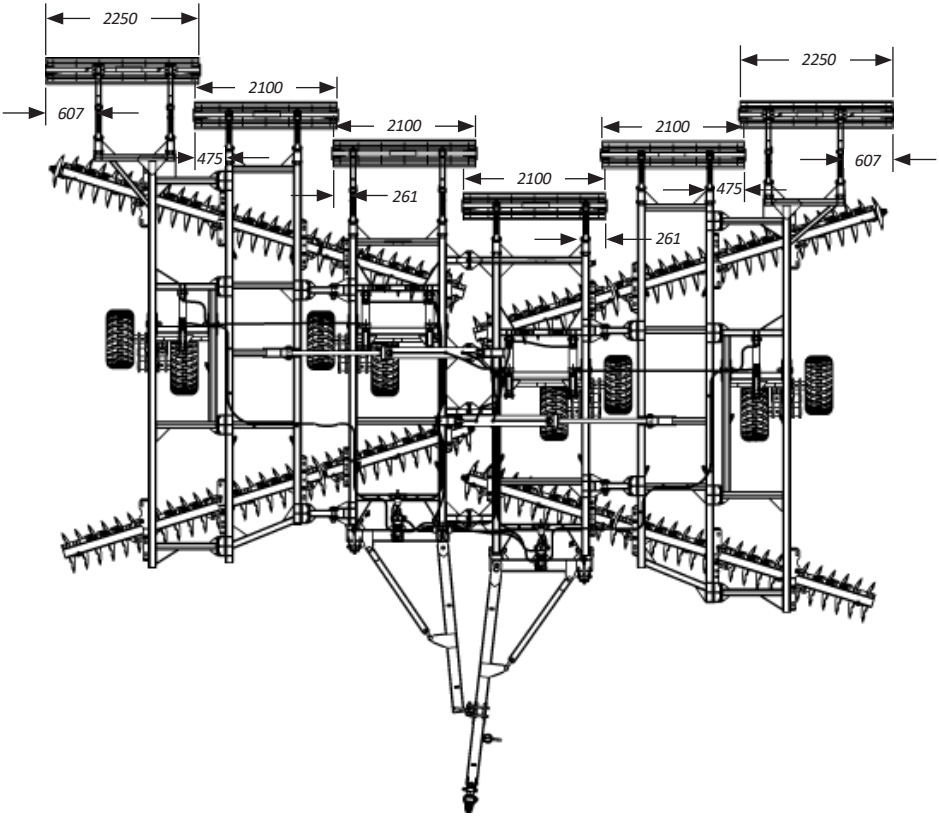

ATTENTION For the perfect functioning of the crushing rollers, when assembling them, respect the measures above.

▪ Assembly

• Assembly of signage

To assembly the signage on the uprights, proceed as follows:

01 - Secure the signage (1) in the center left frame (2) through the bolts (3), plain washers (4), lock washers (5) and nuts (6).

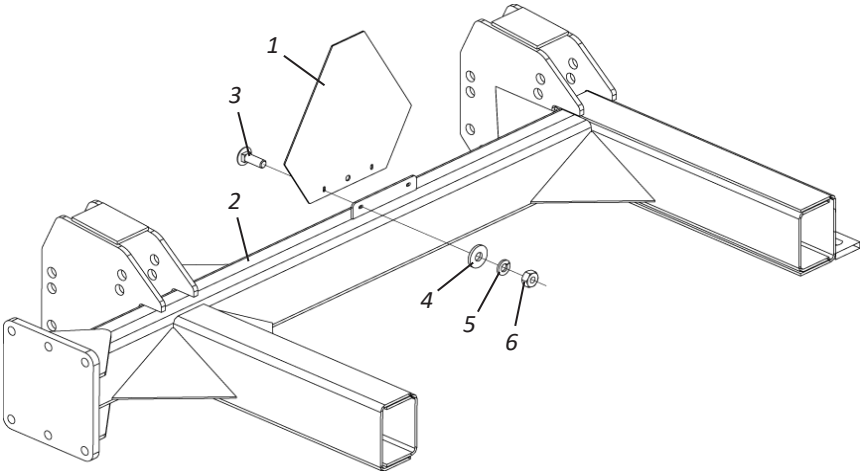

ATTENTION | **DO NOT work or transport MOVERE mainly on highways without traffic signs.**

NOTE | **Repeat the above procedure to mount the signboard on the right center mullion.**

▪ Assembly

ASSEMBLY THE HYDRAULIC SYSTEM - MOVERE 88 DISCS

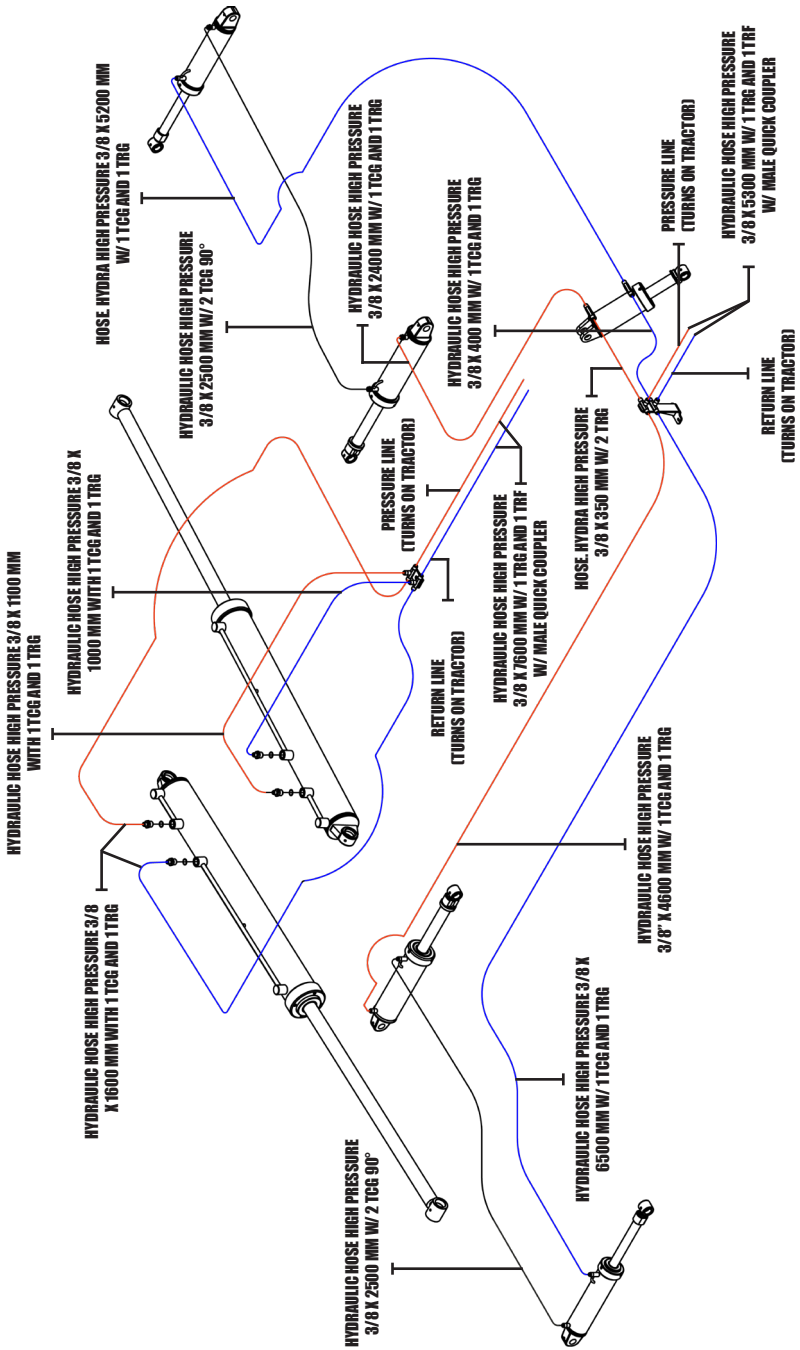

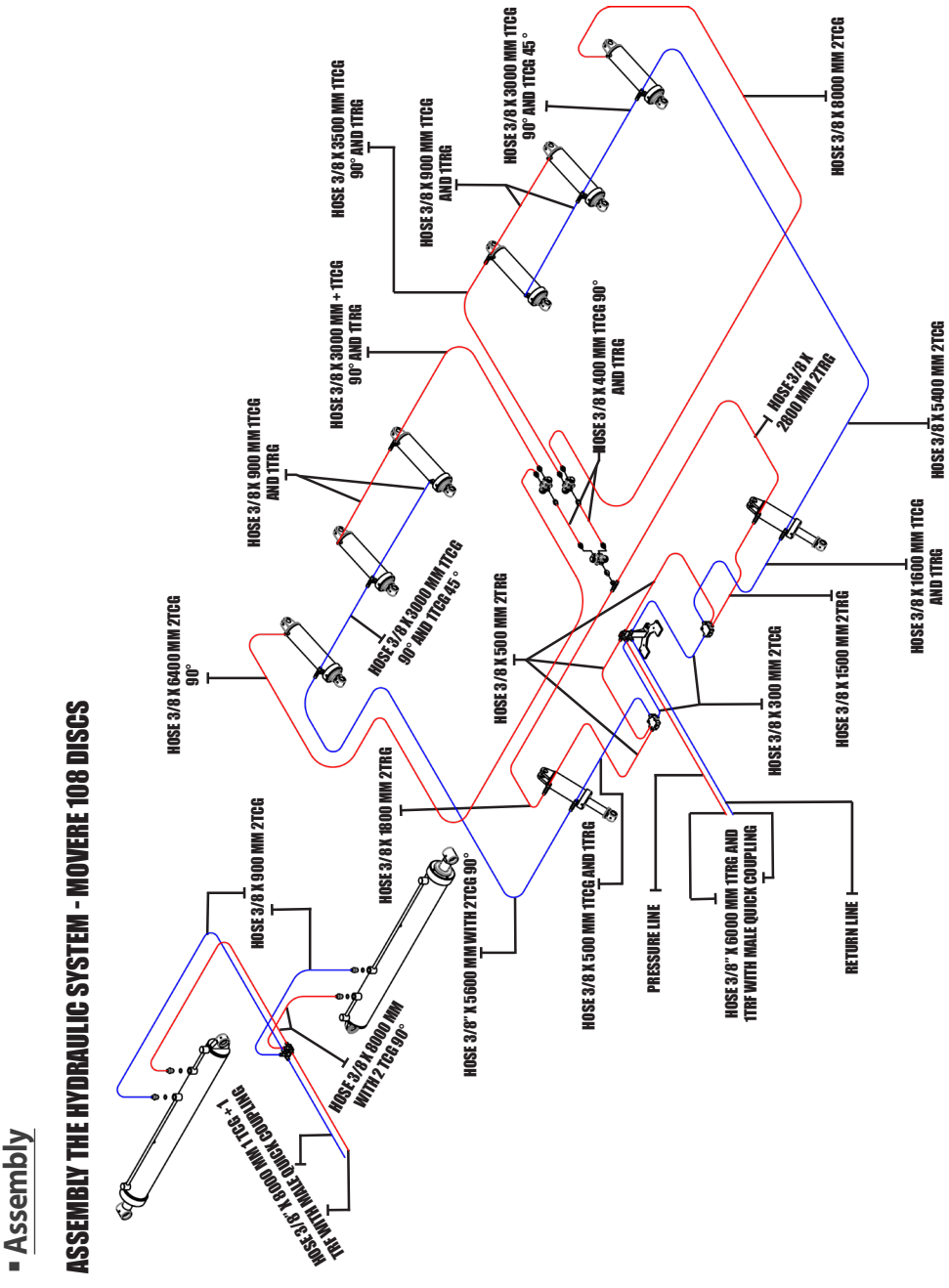

▪ Assembly

ASSEMBLY THE HYDRAULIC SYSTEM - MOVERE 108 DISCS

Assembly

ASSEMBLY THE HYDRAULIC SYSTEM - MOVERE 124 DISCS

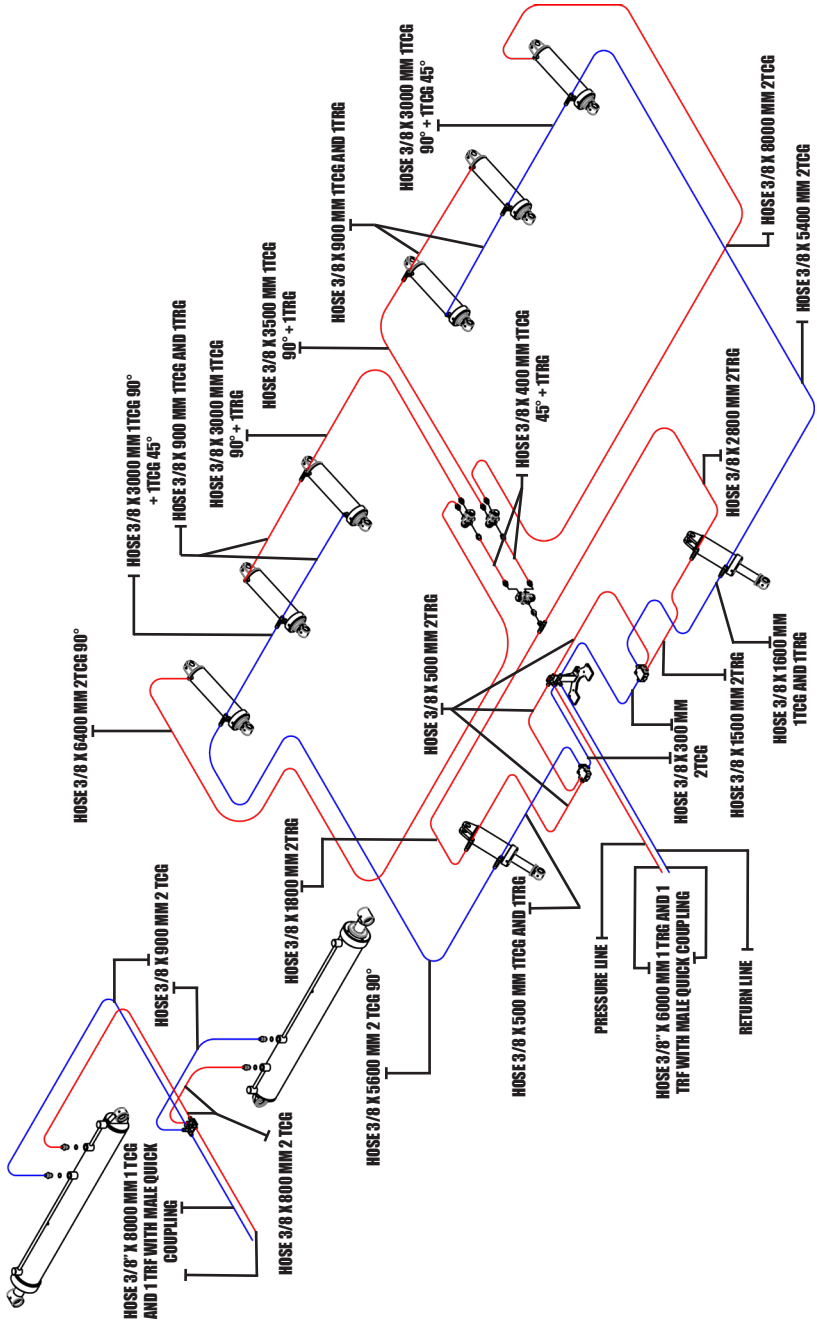

▪ Hitch

HITCH OF THE DISC HARROWS ON THE TRACTOR TRACTION BAR

To hitch the **MOVERE**, proceed as follows:

01 - Level the **MOVERE** hitch header (1) in relation to the tractor hitch through adjustments (2) of the hitch hitch. Then, take the smaller (3) and larger (4) adapter bushings that are in the packing box and place them on the tractor hitch, according to **detail "A".**

02 - Then, slowly approach the tractor to the harrow in reverse gear, paying attention to the application of the brakes and coupling the **MOVERE** to the tractor, fixing it through the coupling pin (5), flat washer (6) and lock (7).

03 - Finish by coupling the hoses (8) to the tractor's quick coupler.

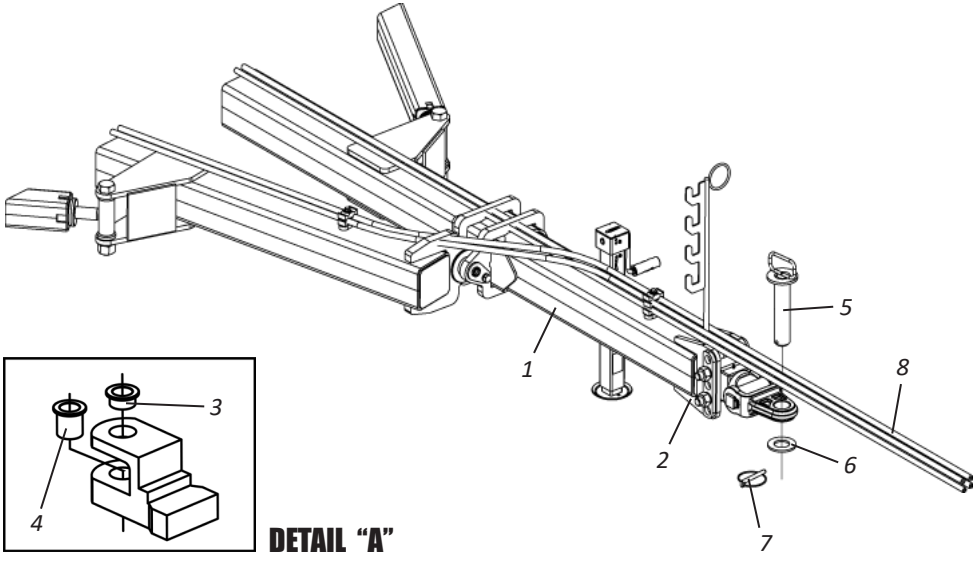

! IMPORTANT

Before connecting or disconnecting hydraulic hoses, stop the engine and relieve pressure from the hydraulic system by operating the control levers fully. When relieving system pressure, make sure that no one is near the equipment movement area.
When coupling the MOVERE, look for a safe and easily accessible place. Always use low gear with low throttle.

▪ Levelling

DISC HARROWS LEVELING - PART I

To level the **MOVERE**, proceed as follows:

01 - Place the tractor and the **MOVERE** in a flat location.

02 - Then, before lifting the **MOVERE**, loosen the nuts (1) of the center rods (2) until half way.

03 - Then, loosen the nuts and locknuts (3) of the header rods (4), leaving them at a distance of 20 mm from the faceof the rod.

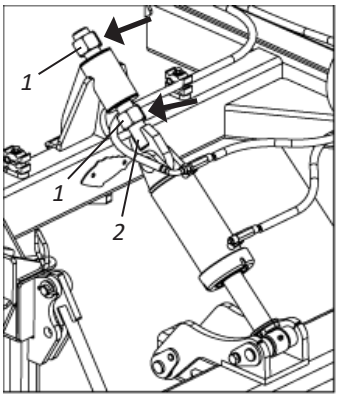

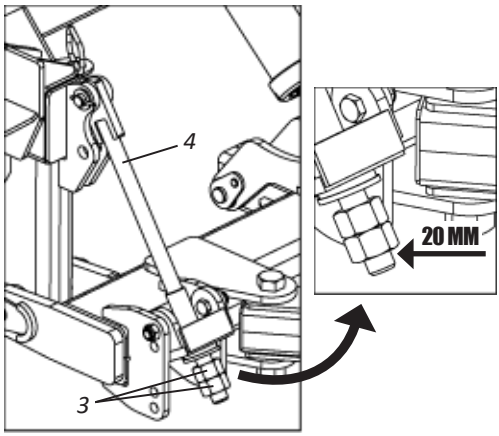

04 - Then, lift the disk harrows up and check if MOVERE is positioned at the front or at the rear.

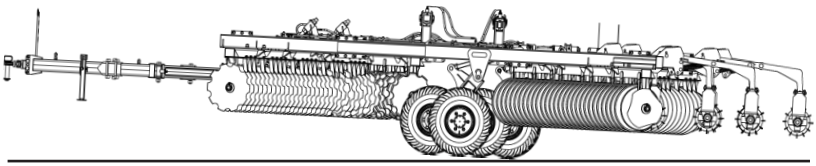

MOVERE POSITIONED IN THE REAR

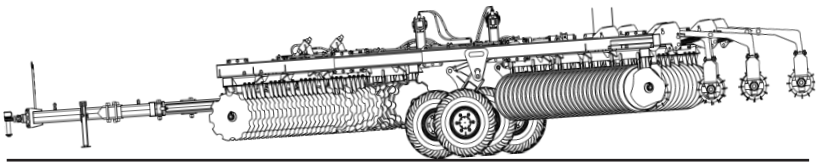

MOVING POSITIONED ON THE

05 - Depending on the position **MOVERE** is at, make the following adjustments:

▪ Levelling

DISC HARROWS LEVELING - PART II

06 - **REAR POSITION:**

When **MOVERE** is in this position, lower it by first lowering the hydraulic system. Then tighten the nuts and locknuts (5) of the head mounts (6) every 10 mm. Then, operate the hydraulic system to raise **MOVERE** and check its position. If you still need to adjust it, re-tighten it by tightening the nuts and bolts (5) + 10 mm and then lift it and check again. Repeat this procedure until **MOVERE** stays level.

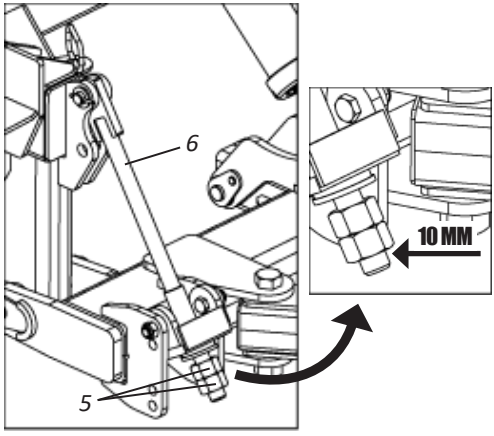

07 - **FRONT POSITION:**

When **MOVERE** is in this position, first lower it by lowering the hydraulic system. Then, loosen the upper nuts (7) of the center rods (8) every 10 mm. Then tighten the lower nuts (9) until it touches the face of the bushing (10). Then, operate the hydraulic system to raise **MOVERE** and check its position. If you still have to adjust it, lower it again by releasing the upper nuts (7) + 10 mm and then lift it and check again. Repeat this procedure until **MOVERE** stays level.

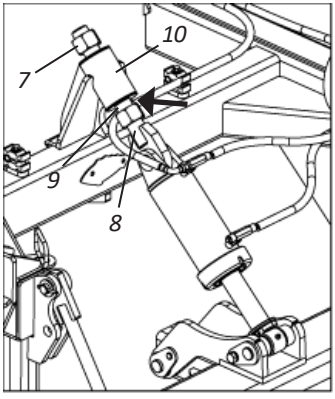

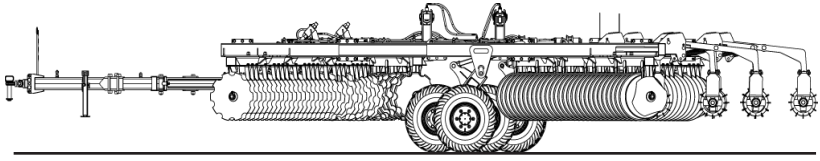

MOVERE IN A LEVELED POSITION

⚠ ATTENTION | **The measures mentioned in the leveling are initial parameters for the leveling of MOVERE.**

▪ Adjustments

• Adjustments for transportation - Part I

Before any operations with **MOVERE**, read the following information:

⚠ When starting the hydraulic process for the first time, there is a greater need for hydraulics of the tractor. Observe the hydraulic oil level of the tractor during the 1st operation.

⚠ Before starting **MOVERE**, check the adjustment of the oil flow so that the gear does not couple abruptly, causing damage to the disk harrows.

⚠ When starting **MOVERE**, if necessary, complete the hydraulic oil level of the tractor. Check the manufacturer's technical manual of the tractor.

⚠ Slow down the oil flow.

Before transporting the **MOVERE**, proceed as follows:

01 - - Attach the side frames (1).

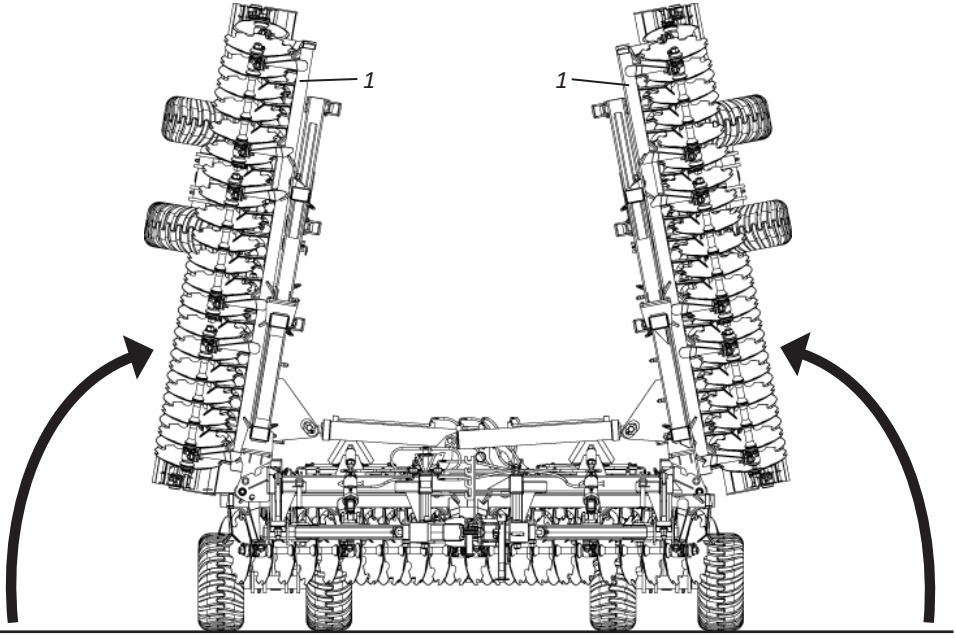

⚠ **ATTENTION** | **At the end of articulation, DO NOT let people fall under the side frames (1) or their area of action**

▪ Adjustments

• Adjustments for transportation - Part II

02 - Then remove the pins (2) plain washers (3) and locking locks (4) attached to the central studs (5).

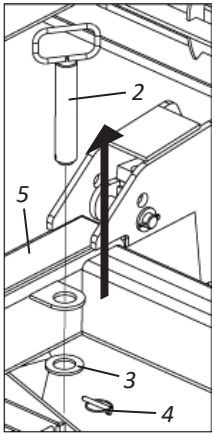

03 - Then, place the pins (2) plain washers (3) and locking locks (4) on thebrackets (6) by locking the side frames (1).

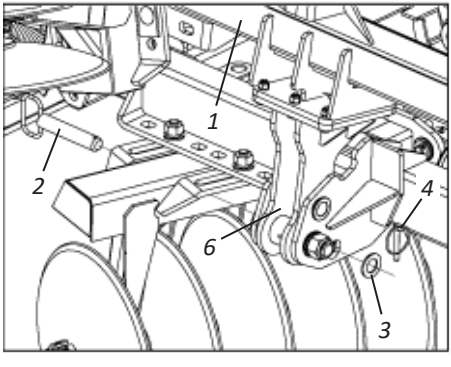

REAR SUPPORT

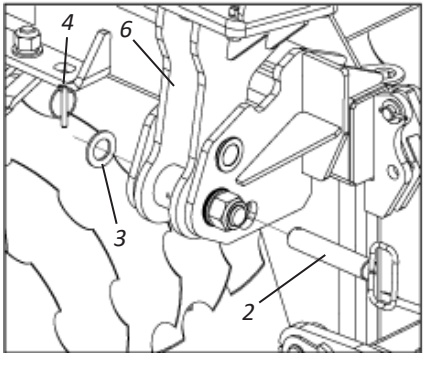

BACK SUPPORT

⚠ ATTENTION

Do not transport the MOVERE without locking the side frames (1).
Do not transport MOVERE with only one bracket locked. Always lock the 2 brackets together (front and rear) of each side frame.
At the end of transporting MOVERE, remove the pins (2), leaving the side frames (1) free to start the movement. Ignoring these warnings could cause serious injury or damage to MOVERE.

▪ Adjustments

• Adjustments for transportation - Part III

04 - Then fully activate the stroke of the hydraulic cylinders (7) of the circlip, place the locks (8) and secure them with the pins (9) and locks (10).

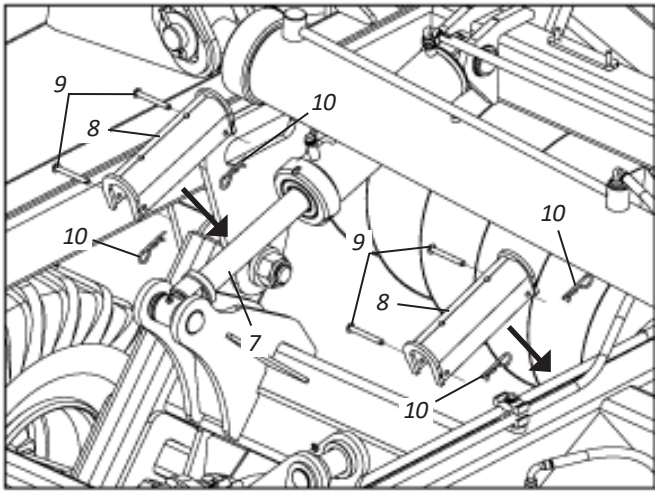

05 - Then fully actuate the stroke of the hydraulic cylinders (11) of the header, place the locks (12) and secure them with the pins (13) and locks (14).

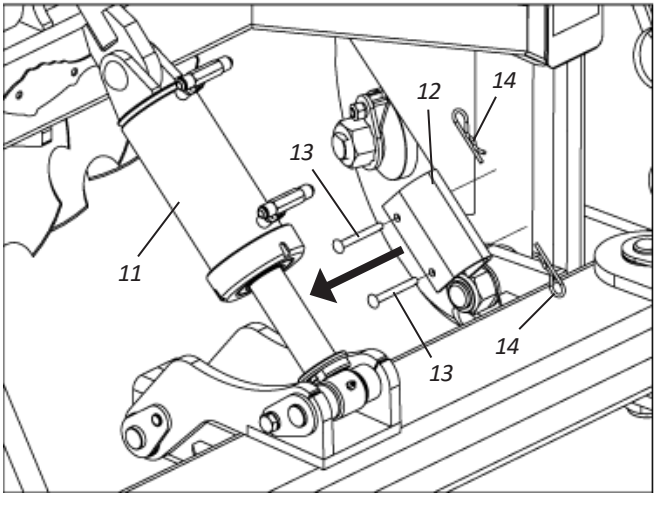

▪ Adjustments

• Adjustments for transportation - Part IV

06 - Before commencing shipping, check the height of **MOVERE**. If it is necessary to reduce this height a little, the side frames (1) have tillage rollers (15) with adjustments as indicated by the **points "A"**. To adjust the tillage rollers (15), first loosen the screws (16). Then unscrew the nuts (17), plain washers (18) and the bolts (19) and move the tillage rollers (15) until the hole in the holder (20) is aligned with the hole **point "B"**. Then retighten the nuts (17), plain washers (18) and the bolts (19) and replace the bolts (16) tightening them.

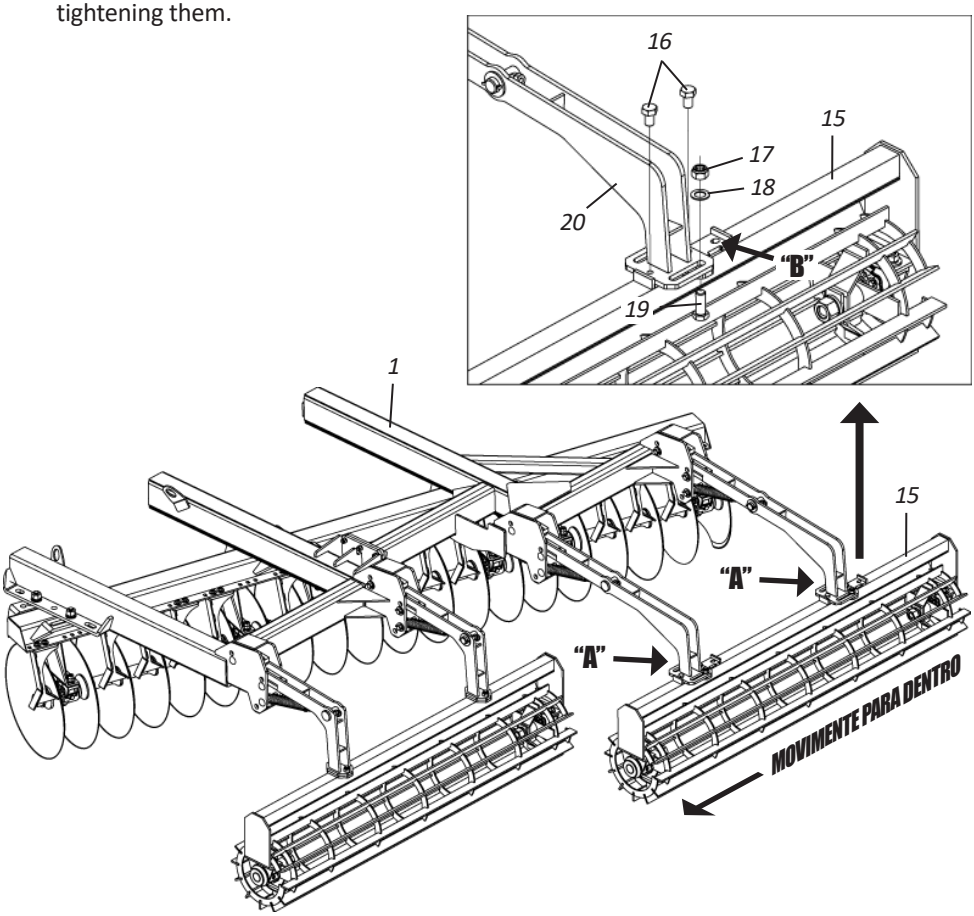

NOTE **Make the same adjustment on the other tillage roller on the left side frame.**

▪ Adjustments

• Adjustments for transportation - Part V

07 - When the **MOVERE** is transported, remove the locks (8) from the hydraulic cylinders (7) and fix them to the central uprights (5) through the pins (9) and locks (10). Also remove the locks (12) of the hydraulic cylinders (11) from the header.

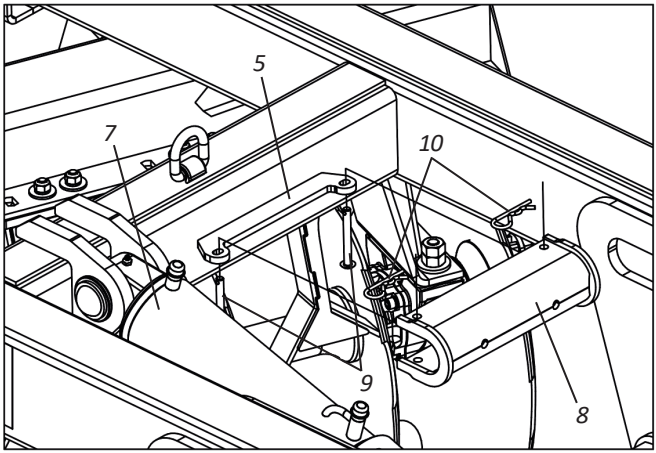

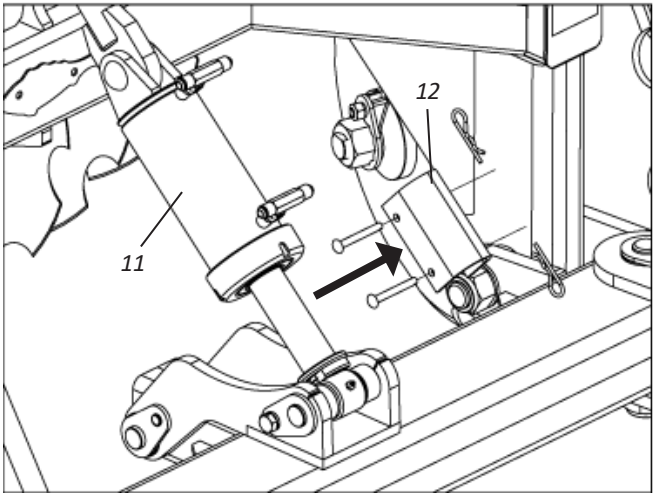

ATTENTION **Do not transport MOVERE without placing the latches on the hydraulic cylinders. (7) of the wheel and the hydraulic cylinders (11) of the header. Ignoring this warning can cause damage to the hydraulic cylinders.**

▪ Adjustments

• Working depth adjustment

To regulate the working depth of **MOVERE**, proceed as follow:

01 - Activate the rods of the hydraulic cylinders (1) of the wheel until necessary.
02 - Then, set the limiting rings (2) on the rods of the hydraulic cylinders (1) to fill the entire space between the rod coupling and the hydraulic cylinder (1).
03 - After completing the work with **MOVERE**, remove the limiting rings (2) from the hydraulic cylinders (1) of the wheel.

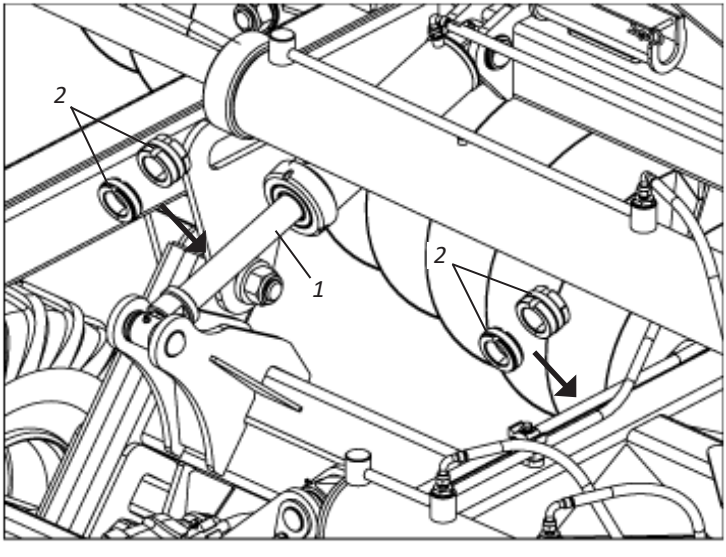

ATTENTION **Always place the same number of limiting rings (2) on the hydraulic cylinders (1) of the wheel.**

IMPORTANT **After adjustment, MOVERE will always operate in the same depth, both in hard and loose terrain, because the limiting rings (2) are limiting the stroke of the hydraulic cylinder (1) of the wheel, that is, preventing oscillation of the wheels.**

NOTE **The limiting rings (2) that come with MOVERE have different sizes which combined offer various depth settings.**

▪ Adjustments

• Tillage roller pressure adjustment - Part I

After adjusting the working depth, adjust the pressure of the tillage rollers (1). There aretwo adjustment options for the tillage rollers: **HIGHER PRESSURE** and **LESSER PRESSURE.**

HIGHER PRESSURE:

01 - Dig the discs into the ground to the specified depth.

02 - Then increase the pressure of the tillage rollers (1) by tightening the nuts and cotter nuts (2) of the rods (3).

03 - If you still need to increase the pressure, loosen the cotter pin (4), flat washer (5), remove the pin (6) and change the spring (7) of the **point "A"** to **point "B"** and attach it again.

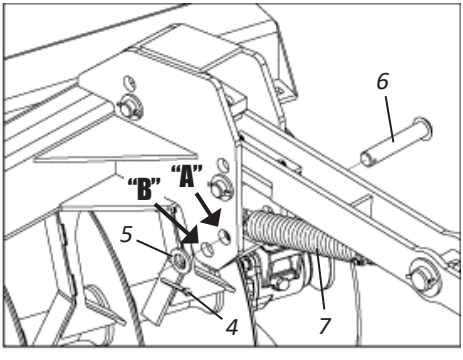

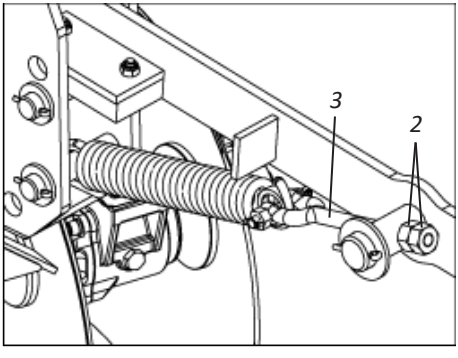

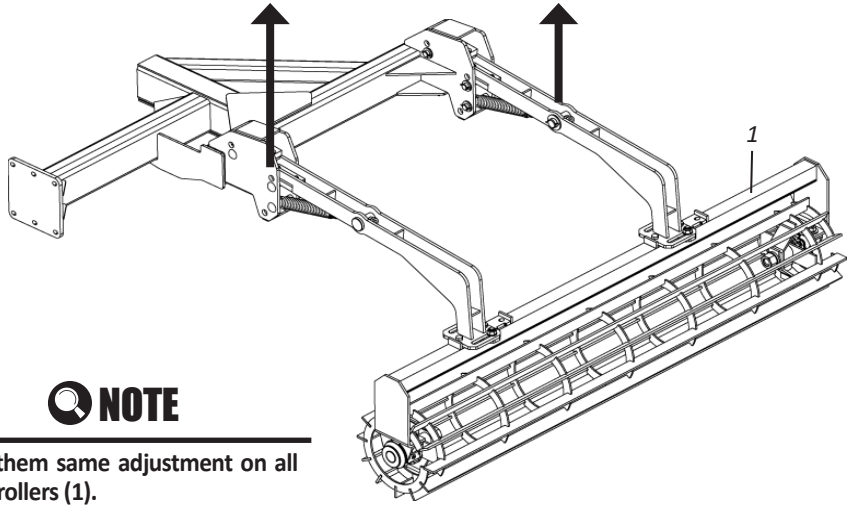

NOTE

Make them same adjustment on all tillage rollers (1).

▪ Adjustments

• Tillage roller pressure adjustment - Part II

LESSER PRESSURE:

01 - Dig the discs into the ground to the specified depth.

02 - Then, reduce the pressure of the tillage rollers (1) by loosening the nuts and locking nuts (2) of the rods (3).

03 - If you still need to reduce the pressure, loosen the cotter pin (7), flat washer (8), remove the pin (9) and change support (10) of **point "A"** to **point "B"** and attach it again.

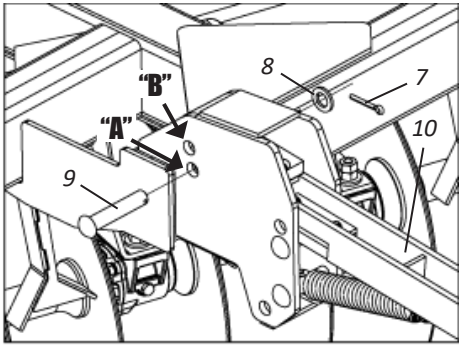

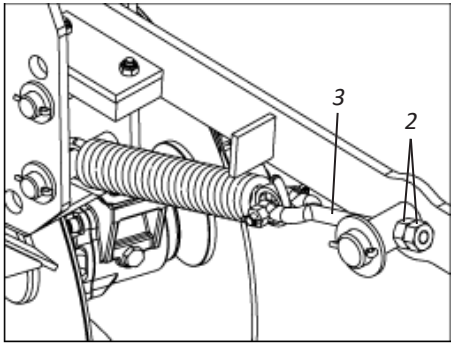

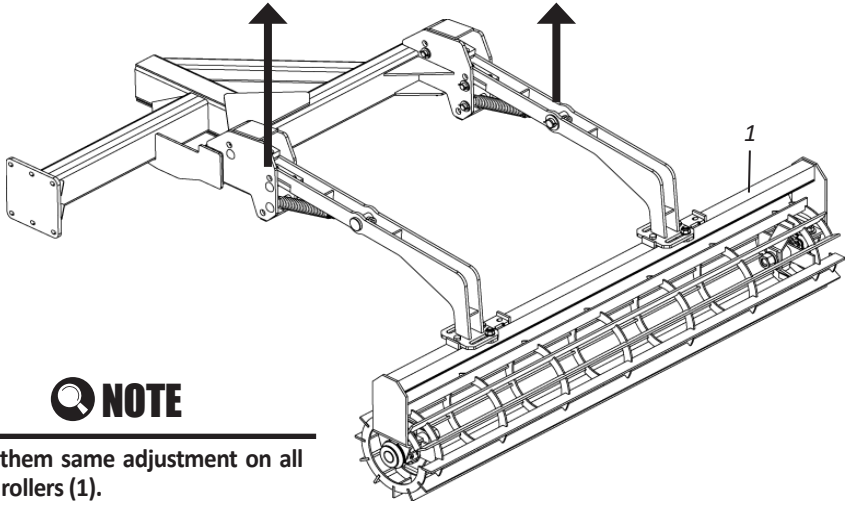

NOTE

Make them same adjustment on all tillage rollers (1).

▪ Adjustments

• Grid centering adjustment

To centralize **MOVERE**, adjust the coupling header (1), as follows:

01 - According to the adjustment to be made, tighten or loosen the nut (2) of the header adjuster (3) until you reach the desired setting.

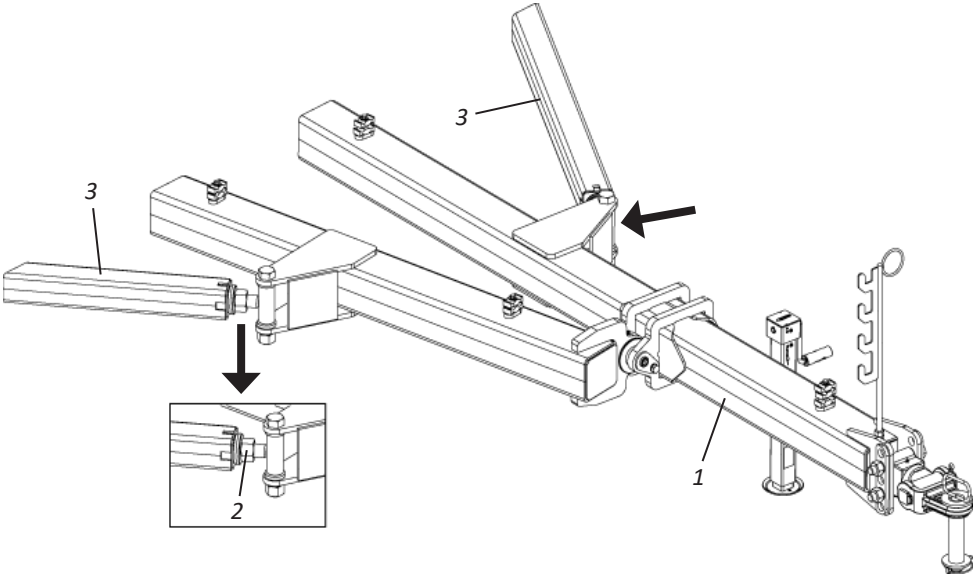

ATTENTION **Before starting work with MOVERE, make sure that the nuts (2) are well locked.**

▪ Operations

• Recommendations for operation - Part I

The preparation of **MOVERE** and the tractor will allow you to save time in addition to a better result in field work. The following suggestions may be helpful to you.

GRID STRUCTURE

After the first day of work with MOVERE, retighten all bolts, nuts and check the condition of the bolts and latches of the grid structure. Then perform a general tightening on all bolts and nuts in the grid structure every 24 hours of work.

DISC SECTIONS

Special attention should be given to the **MOVERE** discs.Re-tighten all bolts and nuts of the disc sections daily during the first week of use. Then, re-tighten the screws and nuts on the disc sections periodically.

GENERAL RECOMMENDATIONS

01 - Adjust the tractor according to the contents of the instruction manual, always using the front and rear weights to stabilize the equipment.

02 - Couple the tractor always in a low gear and very carefully.

03 - When using **MOVERE**, it is important to check the coupling system and transverse leveling to make sure that the discs will have the same depth of penetration in the ground.

04 - After hitching and leveling, the next adjustments will be made directly in the field of work, analyzing the terrain in its texture, humidity and the types of operations to be done with **MOVERE**.

05 - On the tractor, choose a gear that allows you to maintain a certain power reserve, guaranteeing power against unforeseen efforts.

06 - Observe the specified working and transport speeds on page 00. We do not advise you to exceed the speeds in order to maintain service efficiency and avoid possible damages to **MOVERE**

07 - When executing maneuvers in the headwheels, first actuate the hydraulic cylinders gradually by lifting the disc sections.

08 - During harrowing (with the discs on the ground), do not make right or left hand maneuvers, since the angles formed by the disc sections will transmit a great force,especially on the traction components.

▪ Operations

• Recommendations for operation - Part II

09 - Do not disengage any hoses without first relieving the circuit pressure by turning the control levers a couple of times with the engine off.

10 - Remove pieces of wood or any other object that can be attached to the discs.

11 - In compacted ground where the penetration of the discs is difficult, the depth may be minimal, making work unsatisfactory. In these cases, the application of other more suitable products is recommendeds.

12 - During work or transportation, the tractor's drawbar must remain fixed.

13 - When performing any maintenance on **MOVERE**, you should lower it to the ground and turn off the engine.

14 - **MOVERE** has several settings, however, only local conditions can determine the best regulation of them.

If in doubt, never operate or handle MOVERE, consult your After Sales service.
Telephone: 0800-152577 / E-mail: posvenda@baldan.com.br

▪ Calculations

• Approximate hourly production

To calculate the approximate hourly output of **MOVERE**, use the following formula:

$$A = \frac{L \times V \times F}{X}$$

FORMULA DATA:

A = Area to be worked
L = Grid working width (in meters)
V = VAverage tractor speed (in meters / hour)
F = Production factor: 0,90
X = Value of the hectare: 10,000 m² (the amount varies by region).

Example: A **MOVERE with 88 DISCS**, how many Ha will be produced in one hour of work at an average speed of 7 km/h.

A = ?
L = 8,31m
V = 7.000 m/h
F = 0,90
X = 10.000 m² (Calculated in hectares)

$$A = \frac{8{,}31 \times 7.000 \times 0{,}90}{10.000} = 5{,}23 \text{ Ha/h}$$

Model	Number of Discs	Working width (mm)	Average Speed (m/h)	Production Factor	Approximate Production in Hectares Hour
MOVERE	88	8315	7.000	0,90	5,23
	108	10253	7.000	0,90	6,45
	124	11815	7.000	0,90	7,44

The formula for calculating the approximate production refers to the calculation of areas to be worked or worked by **MOVERE**. If you want to know the time that will be spent to work an area of a known value, just divide the value of this area by the daily output of **MOVERE**.

Example: What "X" time will be spent for a **MOVERE** disc harrows grid with 88 discs to produce 35 hectares at an average speed of 7km/h?

$$X = \frac{35 \text{ Ha}}{5{,}23 \text{ Ha/h}} = 6{,}69 \text{ hours approximately to work 35 hectares.}$$

⚠ ATTENTION **The hourly production of MOVERE can vary by factors that alter the work rhythm as (soil moisture and hardness, terrain slope, inadequate adjustments and speed of work).**

▪ Maintenance

MOVERE has been developed to provide you with maximum performance over ground conditions. Experience has shown that the periodic maintenance of certain parts of the **MOVERE** is the best way to help you avoid problems, so we suggest their verification.

• Tire pressure

Tires should always be properly calibrated avoiding premature wear due to excess or lack of pressure.

TYRES 400 X 60 14 TARPAULINS

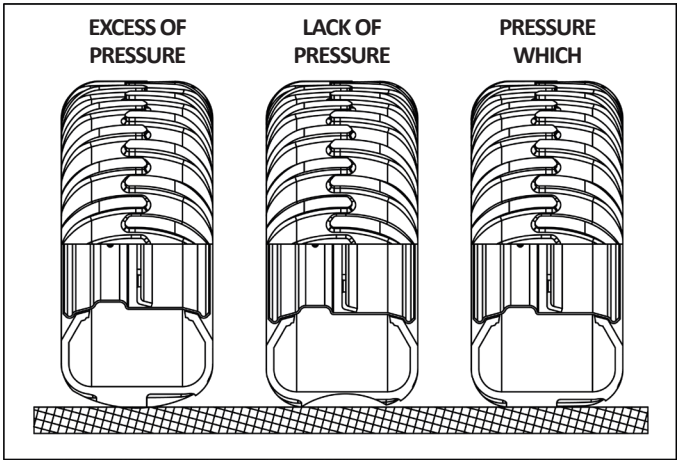

USE: 52 LBS/POL²

⚠ ATTENTION

Never weld the tire-mounted wheel, heat may cause air pressure to rise and cause an explosion of the tyre.
When filling the tire, position yourself next to the tire, never in front of it.
To fill the tire, always use a containment device (filling cage).
Mount the tires with proper equipment. The service must be performed only by persons qualified for the job.

IMPORTANT

When calibrating tires, do not exceed the recommended calibration.

NOTE

The pressure of the tractor tires should be adjusted according to the manufacturer's recommendation.

▪ Maintenance

MOVERE has been developed to provide you with maximum performance over ground conditions. Experience has shown that the periodic maintenance of certain parts of the **MOVERE** is the best way to help you avoid problems, so we suggest their verification.

• Lubrification

Lubrication is essential for good performance and a longer service life of the **MOVERE**, contributing to the maintenance cost savings.

Before starting the operation, carefully lubricate all grease fittings, always observing the greasing intervals on the following page. Make sure about the lubricant quality, regarding its efficiency and purity, avoid using products contaminated by water, earth and other agents.

• Grease and equivalents table

Manufacturer	Recommended Grease Types
Petrobrás	Lubrax GMA-2
Atlantic	Litholine MP 2
Ipiranga	Ipiflex 2
Castrol	LM 2
Mobil	Grease MP
Texaco	Marfak 2
Shell	Alvania EP 2
Esso	Multi H
Bardahl	Maxlub APG-2EP
Valvoline	Palladium MP-2
Petronas	Tutela Jota MP 2 EP
	Tutela Alfa 2K
	Tutela KP 2K

⚠ ATTENTION **If there are manufacturers and/or equivalent brands that are not listed in the table, consult the manufacturer's technical manual**

▪ Maintenance

- Lubricate every 24 working hours - Part I

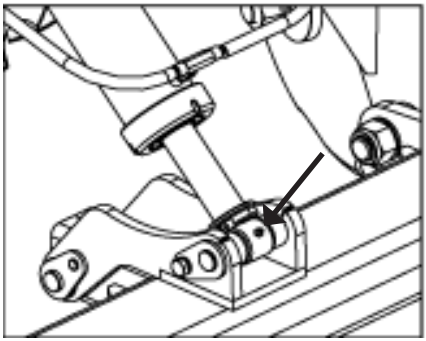
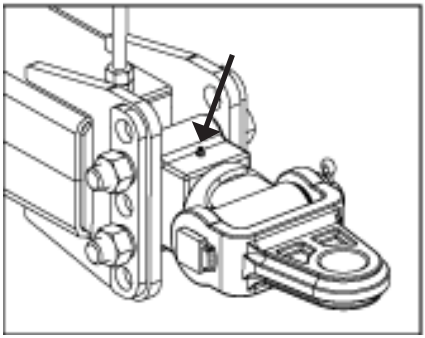
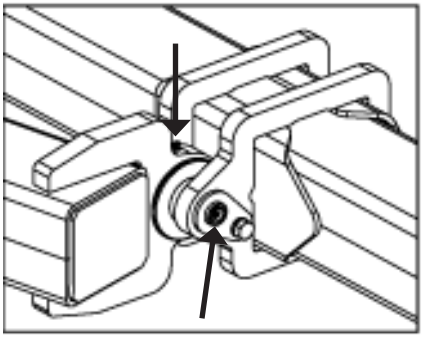
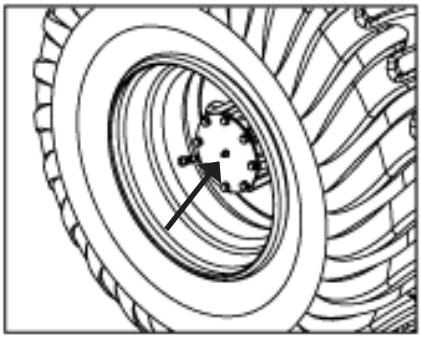
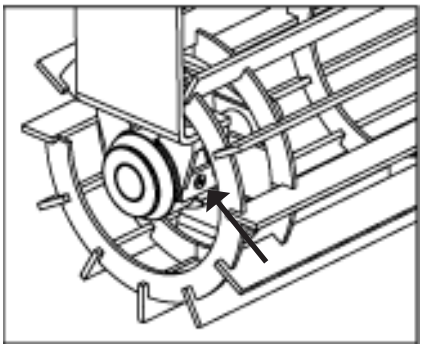
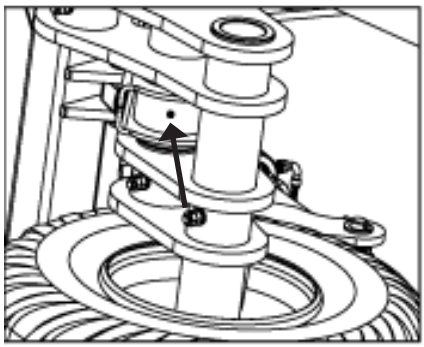

⚠ ATTENTION

When lubricating the MOVERE, do not exceed the amount of new grease. Introduce a sufficient amount.

▪ Maintenance

- Lubricate every 24 working hours - Part II

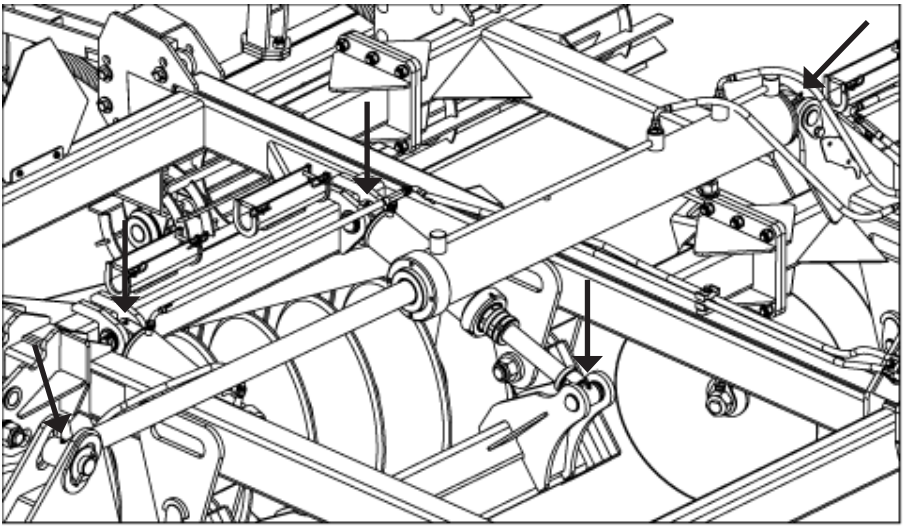

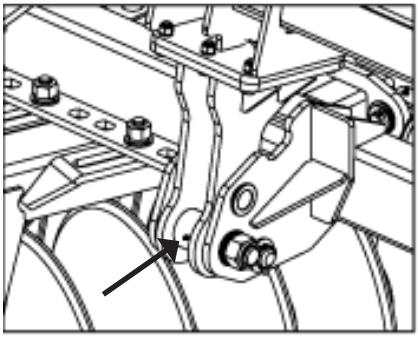

⚠ ATTENTION

When lubricating the MOVERE, do not exceed the amount of new grease. Introduce a sufficient amount.

▪ Maintenance

• Adjustments of the rollers bearings

When the bearings of the tillage rollers have clearances, proceed as follows to adjust them:

01 - Loosen the screws (1) and remove the cover (2) from the bearing (3).
02 - Then, remove one or two gaskets (4) from the cover (2) of the bearing (3). Replace the cover (2) and retighten it.
03 - If the gap remains, the cover (2) can be checked toincrease the setting, then mount it on the bearing with as many joints as necessary.
04 - The bearing must rotate freely, i.e. without clearances.

⚠ ATTENTION

Do not mount the bearing without (5).

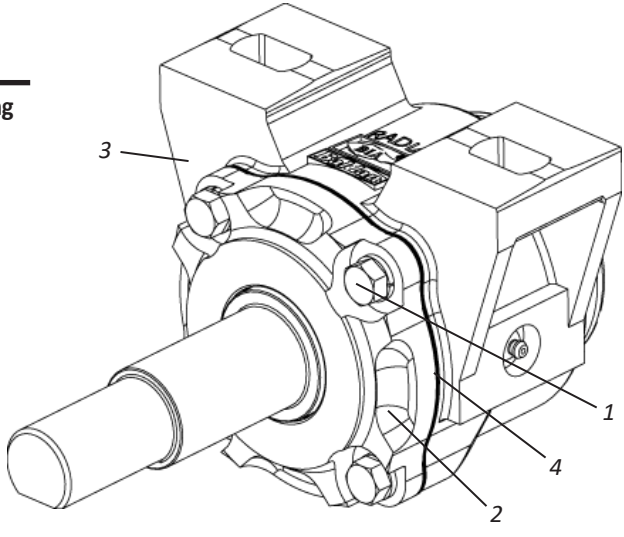

• Lubrication of the bearings

Before lubricating the tillage roller bearings, wipe the grease with a clean, lint-free cloth and replace the grease fittings that are damaged.

Lubricate the tillage roller bearings every 12 hours of operation using the amount and grease specified below.

IMPORTANT **Greasing the bearing (3) requires 0.120 kg of grease. Use only the specified grease: EP Grease (Specification DIN51825 KP00K NLGI Consistency 2/3.**

NOTE **When lubricating the bearings of the tillage rollers, do not exceed the amount of new grease. Fill-in a sufficient quantity.**

▪ Maintenance

• Adjustments of the disc section bearings

When the bearings of the disc sections have clearances, proceed as follows to adjust them:

01 - Remove the washer (1).
02 - Then, loosen the screws (2) and remove the cover (3) from the bearing (4).
03 - Then, remove one or two gaskets (5) from the cover (3) of the bearing (4). Replace the cover (3) and retighten it.
04 - If the gap remains, the cover (3) can be checked to increase the setting, thenmount it on the bearing with as many joints as necessary.
05 - The bearing must rotate freely, i.e. without clearances.

⚠ ATTENTION

Do not mount the bearing without (5).

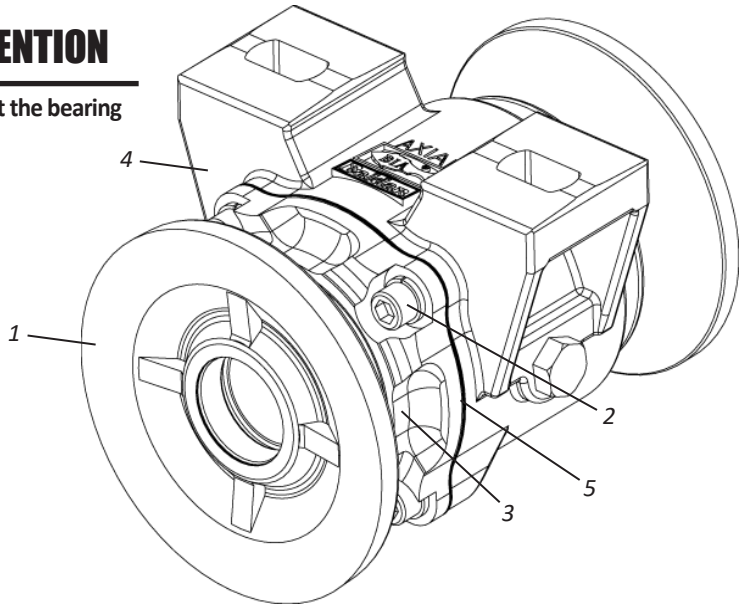

• Bearing oil

In the first days of working with MOVERE, check the bearing oil level daily, then check every 120 hours of work.

Oil change should be done every 1200 hours of work. Use transmission oil 90 API GL4, MIL- L-2105; SAEJ306, May / 81: SAE 80W, 90 and 140.

⚠ ATTENTION **The ideal oil level is when it reaches the hole in the plug. To check the bearing oil level, look for a flat spot.**

▪ Maintenance

• Operational Maintenance

PROBLEMS	PROBABLE CAUSES	SOLUTIONS
The tires are damaged.	Work area with stones, stumps or crop remains with stems that cause the tires to be poked.	Eliminate the elements that cause damage to the tires before the period of use of MOVERE.
	Tires are not under proper pressure, causing deformation.	Maintain adequate pressure in the tires.
Strange noise on the wheels.	Loose wheels or wheel hub.	Identify the occurrence and replace the damaged parts.
	Breaking of bearings.	Identificar a ocorrência e substituir as peças danificadas.
Quick coupling does not fit	Couplings of different types.	Exchange it for males and females of the same type.
Leaking hydraulic hoses.	There is no sealing material on the thread.	Use sealing tape and reseal carefully.
	Insufficient tightening.	Retighten carefully.
	Damaged repairs.	Replace terminals.
Leak in quick couplings.	Insufficient tightening	Retighten carefully without excess.
	Damaged repairs.	Replace repairs.
Quick couplers are not coupling.	Couplers of different brands.	Use quick couplers of the same brand.
	Mixture of needle type couplings with ball type coupling.	Always use quick couplers of the same type.
	Pressure on the system.	Relieve the pressure to couple.

▪ Maintenance

• Care

01 - Before each job, check the condition of all hoses, pins, screws, bearings, disks, and sections. When necessary, re-tighten them.

02 - The speed of movement must be carefully controlled according to the terrain conditions.

03 - **MOVERE** is used in many applications, requiring knowledge and attention during its handling.

04 - Only local conditions can determine the best working form **MOVERE**.

05 - When mounting or removing any part of the **MOVERE**, use appropriate methods and tools.

06 - Carefully observe the lubrication intervals at the various lubrication points of **MOVERE**. Observe the lubrication intervals.

07 - Always trust the parts to wear out. If replacement is required, always require genuine Baldan parts.

08 - Keep your **MOVERE** discs always sharps.

! IMPORTANT | **Proper and periodic maintenance is necessary to ensure the long life of the MOVERE.**

▪ Maintenance

• General Cleaning - Part I

01 - When storing the **MOVERE**, do a general cleaning and wash it completely with water only. Check that the paint has not worn out, if this has happened, give a general coat, apply the protective oil and fully lubricate the **MOVERE**. Do not use burnt oil or any other type of abrasive.

02 - Completely lubricate **MOVERE**. Check all moving parts of **MOVERE**, if they present wears or gaps, make the required adjustment or replace the parts, leaving the machine ready for the next work.

03 - After all maintenance precautions, store the harrow in a covered and dried location, properly supported.

Avoid: - That the discs come into direct contact with the ground.
- The compression of the springs.
- That the hydraulic hoses be property capped.

▪ Maintenance

• General Cleaning - Part II

04 - When connecting or disconnecting the hydraulic hoses, do not let the ends touch the ground.Before connecting the hydraulic hoses, wipe the connections with a clean, lint-free cloth. **Do not use tow!**

05 - Replace all adhesives, especially those about warnings, that are damaged or missing. Make everyone aware of the importance and risks of accidents when instructions are not followed.

06 - After all maintenance precautions, store your **MOVERE** in a plain surface, covered and dried location, away from animals and children.

07 - We recommend to wash the **MOVERE** with water only on the beginning of works.

⚠ ATTENTION | **Do not use abrasives or chemical products to wash MOVERE, it may damage its painting and adhesives.**

• Harrow conservation - Part

To prolong the life and appearance of **MOVERE** longer, follow the instructions below:

01 - Wash and clean all grid components during and at the end of the working season.

02 - Use neutral products to clean the grill, following the safety and handling guidelines provided by the manufacturer.

03 - Always carry out maintenance during the periods indicated in this manual.

• Harrow conservation - Part II

The practices and precautions below if adopted by the owner or operator make the difference for the conservation of **MOVERE.**

01 - Be careful when performing high-pressure washing; do not direct the water jet directly into the connectors and electrical components. Isolate all electrical components;

02 - Use only NEUTRAL detergent and water (pH equal to 7);

03 - Apply the product, following the manufacturer's instructions strictly, on the wet surface and in the correct sequence, respecting the time of application and washing;

04 - Stains and dirt not removed with the products should be removed with the aid of a sponge.

05 - Rinse the machine with clean water to remove any chemical residues.

▪ Maintenance

06 - Do not use: - Detergents with a basic active principle (pH greater than 7) can harm/ stain the paintwork on the grid.

- Do not use abrasives or chemical products to wash MOVERE, it may damage its paintng and adhesives.

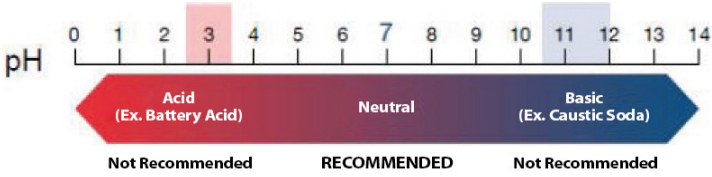

07 - Allow the machine to dry in the shade so that it does not accumulate water in its components.

08 - After drying, lubricate all chains and greases according to the recommendations in the operator's manual.

09 - Spray all the machine, especially the zinc parts, with protective oil, following the manufacturer's application guidelines. The protective also prevents dirt from adhering to the machine, facilitating subsequent washings.

10 - Observe curing time (absorption) and application intervals as recommended by the manufacturer.

⚠ ATTENTION | **Do not use any other type of oil to protect the harrow (used hydraulic oil, "burnt" oil, diesel oil, castor oil, kerosene, etc).**

! IMPORTANT | **We recommend the following protective oils:**
- Bardahl: Protective Agro 200 or 300
- ITWChemical: Zoxol DW - 4000 Series

NOTE | **Ignoring the conservation measures mentioned above may result in the loss of warranty for painted or zinc-plated components that show possible oxidation (rust).**

▪ Lifting

• Warnings for lifting - Part I

⚠ Carefully read all the information contained on pages 73 to 75 before starting the MOVERE lifting procedure as instructed on page 76.

⚠ Before starting the lifting of the MOVERE, look for a safe and easily accessible location that is clean and free of oil, grease, and that is not wet, as there is a danger of accidents.

⚠ When lifting and moving the MOVERE and/or its components, pay full attention to the workplace, the surroundings and always isolate the work area when there is movement by third parties.

⚠ Ensure the capacity of the munck and load lifting machines before lifting the MOVERE and/or components; imminent risk of accidents;

⚠ To avoid serious injury or death while lifting the MOVERE, use PPE (Personal Protective Equipment).

⚠ Do not drag hooks, chains or slings as they can cause damage which must be avoided.

⚠ When lifting the MOVERE, prevent it from screwing in somewhere. Do not subject the equipment to unnecessary effort.

⚠ Never secure the load on the end of the hook. Use large eyebolts or fasten with a suitable shackle.

⚠ Never try to force a large ring to a smaller size hook, use a hook with a suitable opening.

⚠ Raise the MOVERE a few centimeters off the ground and check that the fixing is secure and that the angles and tensions in the sling legs are correct, before starting the movement.

⚠ Move the MOVERE with due care. Lower it gently to avoid bumps or bumps.

⚠ If necessary, move the hook only with your fingertips; never put your hand inside it, as your fingers could be pinched by the load.

⚠ On attachments with lifting eyes, ensure that the eyes are properly positioned. The hook ends must be positioned towards the outside of the load.

⚠ Before lifting the MOVERE, make sure that the weight of the MOVERE is evenly distributed.

⚠ Never lift the MOVERE using a strap that is used for lashing the load. These materials are sized only to tie down cargo and do not support its weight. For lifting, use only GRADE 8 or 10 chains with a load capacity compatible with the weight of the MOVERE to be lifted.

⚠ Accessories must have the same load capacity as the chain; Do not repair broken chains with wires, screws or soldering. Replace any chain that shows any damage.

⚠ Do not twist the attachment of a chain link with a hook, always use a load ring.

▪ Lifting

• Warnings for lifting - Part II

⚠ When lifting with multiple slings on a single hook, the lifting angle must not exceed 90°. The hook can be damaged and there is a risk of opening the hook latch.

⚠ Never move the MOVERE with the chain twisted.

⚠ Make sure the responsible person is instructed in the correct lifting of the MOVERE. Read or explain all procedures to the person who cannot read.

⚠ Baldan is not responsible for any damage caused in unpredictable situations or situations outside the normal lifting of the MOVERE.

⚠ Improperly lifting the MOVERE can result in serious or fatal accidents and damage to the MOVERE.

⚠ Alcoholic beverages or some medications can cause loss of reflexes and change the physical condition of the person responsible and the people involved in the lifting of the MOVERE, so never lift it under the use of these substances.

▪ Lifting

• Inspection of locking hooks, chains and slings

01 - A periodical in-depth examination must be done at least every 12 months or more frequently according to the rules and the type of use of hooks, chains and slings.
02 - Regular inspection includes both operational checks and periodic maintenance.
03 - Inspections of hooks, chains and slings must be carried out by people who haveknowledge of the design, use and maintenance of these materials.
04 - Before inspecting a chain, clean it completely, removing the subject and oil. All cleaning methods that do not attack the base material of the chain are acceptable.
05 - Chains and slings that have been overloaded must be discarded. Permanent stretching is not allowed.
06 - Chains that have cracks or cavities must be discarded.
07 - QWhen a twisted chain is overloaded, it develops permanent deformations. In this case, this chain must be replaced immediately.
08 - If the chain contains deformed links or deep corrosion, it must be replaced immediately.
09 - Damage or wear on hooks, chains and slings must be reported to your superior, who in this case must remove them from use for repair or replacement.
10 - Hooks, chains and slings that remain unused for a period of time must be inspected before being used again.

• Storage

01 - Adequate storage must be provided, preferably at room temperature. Good storage preserves hooks, chains and slings and makes them easy to locate.
02 - Hooks, chains and slings stored for a long time must be protected against corrosion.
03 - Hooks, chains and slings that remain unused for a period of time must be inspected before being used again.

If you have any questions about inspection and storage of hooks, chains and slings, consult the manufacturer's manual.

▪ Lifting

• Lifting points

MOVERE has several lifting points **"A"** located on the uprights and identified through the stickers (1) attached to the side of these points. When assembling, loading, unloading or servicing the **MOVERE**, if you need to lift it with a winch, it is essential to hook the chains to the lifting points **"A"**.

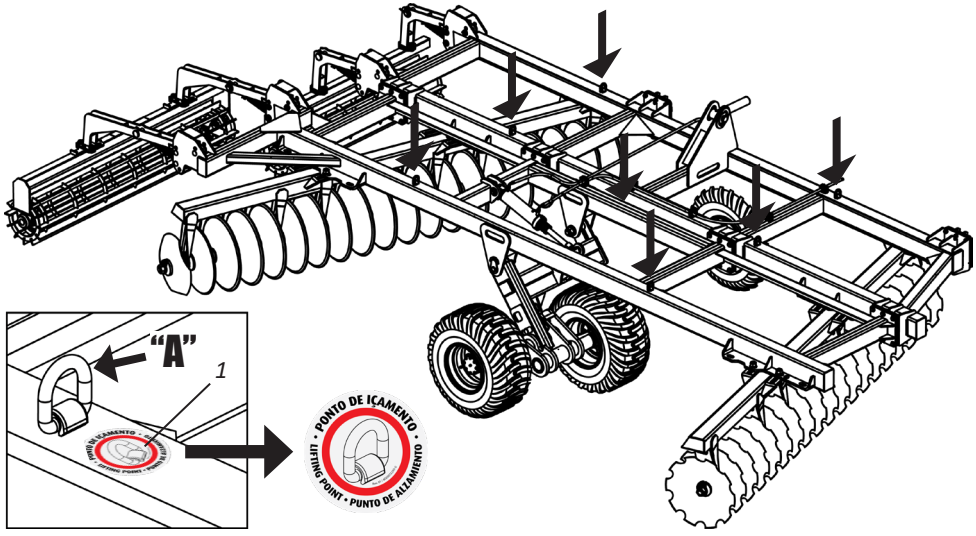

MAXIMUM LOAD: 1000 KG

▪ Optional

• Cutting discs

MOVERE can optionally be purchased with 22" cutting discs.

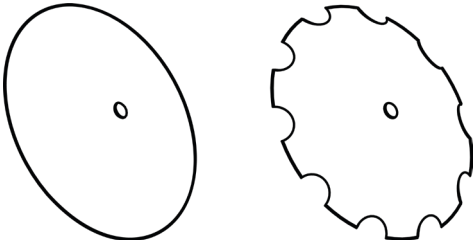

FLAT DISC **INDENTED DISC**

Identification

• Identification plate

To see the parts catalog or to request technical assistance from Baldan, always inform model (1), serial number (2) and date of manufacture (3), which is on your **MOVERE** nameplate.

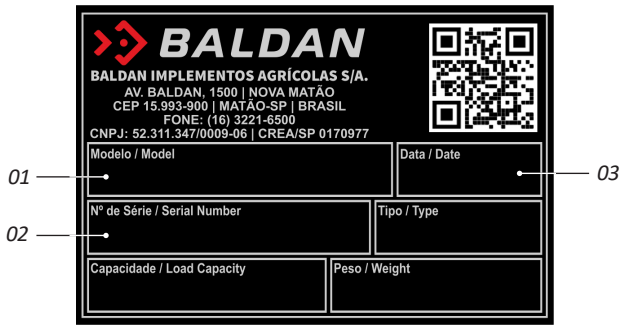

ATTENTION

The drawings contained in this Instruction Manual are for illustrative purposes.

CONTACT

In case of doubt, never operate or handle your equipment without consulting the After Sales.
Telephone: 0800-152577
e-mail: posvenda@baldan.com.br

PUBLICATIONS

Code: 60550108111 | CPT: MOVERE00522B

PEÇAS® ORIGINAIS BALDAN
ORIGINAL PARTS • PIEZAS ORIGINALES

▪ Identification

• Product Identification

Make the correct identification of the data below, to always have information about the life of your equipment.

Owner: _____

Resale: _____

Farm: _____

City: _____

State: _____

Certificate No. of warranty: _____

Implement: _____

Serial No.: _____

Purchase date: _____

Invoice: _____

Notes

Certificate of Warranty

BALDAN IMPLEMENTOS AGRÍCOLAS S/A ensures the dealer normal performance of the implement for a period of six (6) months as of the delivery date on the retail invoice to the first final consumer. During this period, **BALDAN** undertakes to repair defects in material and/or of manufacture of its liability, including labor, freight and other expenses of the dealer's liability.

In the warranty period, request and replacement of eventual defective parts shall be made to the dealer of the area, who will submit the faulty piece for **BALDAN** analysis. When this procedure is not possible and the resolving capacity of the dealer is exhausted, the dealer will request the support of **BALDAN Technical Assistance** through a specific form distributed to dealers. After analyzing the replaced items by Baldan Technical Assistance, and concluding that it is not a warranty, then the dealer will be responsible for the costs related to the replacement; as well as material expenses, travel including accommodation and meals, accessories, lubricant used and other expenses arising from the call out to Technical Assistance, and Baldan company is authorized to carry the respective invoice in the name of the resale. Any repair carried in the product within the dealer warranty deadline will only be authorized by **BALDAN** upon previous budget presentation describing parts and work to be performed.

The product is excluded from this term if it is repaired or modified by representatives not belonging to the **BALDAN** dealer network, as well as the application of non-genuine parts or components to the user's product. This warranty is void where it is found that the defect or damage is caused by improper use of the product, failure to follow instructions or inexperience of the operator.

It is agreed that this warranty does not cover tires, polyethylene tanks, cardan, hydraulic components, etc., which are equipment guaranteed by their manufacturers. Manufacturing and/or material defects, object of this warranty term, will not constitute, under any circumstances, grounds for termination of a purchase agreement, or for indemnification of any nature.

BALDAN reserves the right to change and/or perfect the technical characteristics of its products, without previous notice, and without obligation to proceed in the same way with the products previously manufactured.

▪ Inspection and Delivery Certificate

SERVICE BEFORE DELIVERY: This implement was carefully prepared by the sales organization, inspected in all its parts according to the manufacturer's prescriptions.

DELIVERY SERVICE: The user has been informed of the current warranty terms and instructed on the use and maintenance precautions.

I confirm that I was informed about the terms of existing warranty and instructed on the use and proper maintenance of the implement.

Implement: _____ Serial number: _____

Date: _____ Invoice no.: _____

Resale: _____

Phone: _____ CEP: _____

City: _____ State: _____

Owner: _____

Phone: _____

Address: _____ Number: _____

City: _____ State: _____

E-mail: _____

Date of Sale: _____

Signature / Stamp of Resale _____

1st counterpart - Owner

▪ Inspection and Delivery Certificate

SERVICE BEFORE DELIVERY: This implement was carefully prepared by the sales organization, inspected in all its parts according to the manufacturer's prescriptions.

DELIVERY SERVICE: The user has been informed of the current warranty terms and instructed on the use and maintenance precautions.

I confirm that I was informed about the terms of existing warranty and instructed on the use and proper maintenance of the implement.

Implement: _____ Serial number: _____

Date: _____ Invoice no.: _____

Resale: _____

Phone: _____ CEP: _____

City: _____ State: _____

Owner: _____

Phone: _____

Address: _____ Number: _____

City: _____ State: _____

E-mail: _____

Date of Sale: _____

Signature / Stamp of Resale _____

2nd counterpart - Resale

▪ Inspection and Delivery Certificate

SERVICE BEFORE DELIVERY: This implement was carefully prepared by the sales organization, inspected in all its parts according to the manufacturer's prescriptions.

DELIVERY SERVICE: The user has been informed of the current warranty terms and instructed on the use and maintenance precautions.

I confirm that I was informed about the terms of existing warranty and instructed on the use and proper maintenance of the implement.

Implement: _____ Serial number: _____

Date: _____ Invoice no.: _____

Resale: _____

Phone: _____ CEP: _____

City: _____ State: _____

Owner: _____

Phone: _____

Address: _____ Number: _____

City: _____ State: _____

E-mail: _____

Date of Sale: _____

Signature / Stamp of Resale _____

3rd counterpart - Manufacturer (Please send completed within 15 days)

1.74.05.0059-5

AC MATÃO
ECT/DR/SP

RESPONSE CARD

NOT REQUIRED SEAL

SEAL WILL BE PAID BY:

BALDAN IMPLEMENTOS AGRÍCOLAS S/A.
Av. Baldan, 1500 | Nova Matão | CEP: 15993-900 | Matão-SP. | Brasil
Phone: (16) 3221-6500 | Fax: (16) 3382-6500
www.baldan.com.br | email: sac@baldan.com.br
Export: Phone: +55 (16) 3221-6500 | Fax: +55 (16) 3382-4212 | 3382-2480
email: export@baldan.com.br

BALDAN

Avenida Baldan, 1500
Nova Matão
15.993-900
Matão/SP - Brasil
sac@baldan.com.br
export@baldan.com.br

+55 16 3221 6500
baldan.com.br